AUTHENTICATED
U.S. GOVERNMENT
INFORMATION
GPO

Federal Register

6–1–00 Thursday
Vol. 65 No. 106 June 1, 2000
Pages 34913–35258

The **FEDERAL REGISTER** is published daily, Monday through Friday, except official holidays, by the Office of the Federal Register, National Archives and Records Administration, Washington, DC 20408, under the Federal Register Act (44 U.S.C. Ch. 15) and the regulations of the Administrative Committee of the Federal Register (1 CFR Ch. I). The Superintendent of Documents, U.S. Government Printing Office, Washington, DC 20402 is the exclusive distributor of the official edition.

The **Federal Register** provides a uniform system for making available to the public regulations and legal notices issued by Federal agencies. These include Presidential proclamations and Executive Orders, Federal agency documents having general applicability and legal effect, documents required to be published by act of Congress, and other Federal agency documents of public interest.

Documents are on file for public inspection in the Office of the Federal Register the day before they are published, unless the issuing agency requests earlier filing. For a list of documents currently on file for public inspection, see http://www.nara.gov/fedreg.

The seal of the National Archives and Records Administration authenticates the Federal Register as the official serial publication established under the Federal Register Act. Under 44 U.S.C. 1507, the contents of the **Federal Register** shall be judicially noticed.

The **Federal Register** is published in paper and on 24x microfiche. It is also available online at no charge as one of the databases on GPO Access, a service of the U.S. Government Printing Office.

The online edition of the **Federal Register** is issued under the authority of the Administrative Committee of the Federal Register as the official legal equivalent of the paper and microfiche editions (44 U.S.C. 4101 and 1 CFR 5.10). It is updated by 6 a.m. each day the **Federal Register** is published and it includes both text and graphics from Volume 59, Number 1 (January 2, 1994) forward.

GPO Access users can choose to retrieve online **Federal Register** documents as TEXT (ASCII text, graphics omitted), PDF (Adobe Portable Document Format, including full text and all graphics), or SUMMARY (abbreviated text) files. Users should carefully check retrieved material to ensure that documents were properly downloaded.

On the World Wide Web, connect to the **Federal Register** at http://www.access.gpo.gov/nara. Those without World Wide Web access can also connect with a local WAIS client, by Telnet to swais.access.gpo.gov, or by dialing (202) 512-1661 with a computer and modem. When using Telnet or modem, type swais, then log in as guest with no password.

For more information about GPO Access, contact the GPO Access User Support Team by E-mail at gpoaccess@gpo.gov; by fax at (202) 512–1262; or call (202) 512–1530 or 1–888–293–6498 (toll free) between 7 a.m. and 5 p.m. Eastern time, Monday–Friday, except Federal holidays.

The annual subscription price for the **Federal Register** paper edition is $638, or $697 for a combined **Federal Register,** Federal Register Index and List of CFR Sections Affected (LSA) subscription; the microfiche edition of the **Federal Register** including the Federal Register Index and LSA is $253. Six month subscriptions are available for one-half the annual rate. The charge for individual copies in paper form is $9.00 for each issue, or $9.00 for each group of pages as actually bound; or $2.00 for each issue in microfiche form. All prices include regular domestic postage and handling. International customers please add 25% for foreign handling. Remit check or money order, made payable to the Superintendent of Documents, or charge to your GPO Deposit Account, VISA, MasterCard or Discover. Mail to: New Orders, Superintendent of Documents, P.O. Box 371954, Pittsburgh, PA 15250–7954.

There are no restrictions on the republication of material appearing in the **Federal Register.**

How To Cite This Publication: Use the volume number and the page number. Example: 65 FR 12345.

SUBSCRIPTIONS AND COPIES

PUBLIC	
Subscriptions:	
Paper or fiche	**202–512–1800**
Assistance with public subscriptions	**512–1806**
General online information	**202–512–1530; 1–888–293–6498**
Single copies/back copies:	
Paper or fiche	**512–1800**
Assistance with public single copies	**512–1803**
FEDERAL AGENCIES	
Subscriptions:	
Paper or fiche	**523–5243**
Assistance with Federal agency subscriptions	**523–5243**

Printed on recycled paper.

Contents

Federal Register

Vol. 65, No. 106

Thursday, June 1, 2000

Agriculture Department
See Grain Inspection, Packers and Stockyards Administration

Army Department
NOTICES
Privacy Act:
Systems of records, 35054–35056

Centers for Disease Control and Prevention
NOTICES
Agency information collection activities:
Submission for OMB review; comment request, 35093–35095
Grants and cooperative agreements; availability, etc.:
Hale Empowerment and Revitalization Organizations (HERO), 35095
Healthy People 2010—
Tobacco and chronic disease prevention and control, 35095–35097
Meetings:
Disease, Disability, and Injury Prevention and Control Special Emphasis Panel, 35098

Civil Rights Commission
NOTICES
Meetings; State advisory committees:
District of Columbia, 35045
New Jersey, 35045
New York, 35045

Coast Guard
RULES
Ports and waterways safety:
East River, Wards Island, NY; fireworks display, 34971–34973

Commerce Department
See Export Administration Bureau
See International Trade Administration
See National Oceanic and Atmospheric Administration

Comptroller of the Currency
RULES
Consumer financial information; privacy requirements, 35161–35236

Defense Department
See Army Department

Education Department
NOTICES
Agency information collection activities:
Submission for OMB review; comment request, 35056–35057
Grants and cooperative agreements; availability, etc.:
Upward Bound Program; participant expansion initiative, 35237–35239

Employment and Training Administration
NOTICES
Agency information collection activities:
Proposed collection; comment request, 35125–35126

Energy Department
See Federal Energy Regulatory Commission
NOTICES
Electricity export and import authorizations, permits, etc.:
CMS Marketing, Services and Trading Co., 35057–35058

Environmental Protection Agency
PROPOSED RULES
Water pollution; effluent guidelines for point source categories:
Coal mining, 34996
NOTICES
Reports and guidance documents; availability, etc.:
Pesticides; guidance on import tolerances and residue data for imported food, 35069–35089

Export Administration Bureau
RULES
Export administration regulations:
Restrictive trade practices or boycotts; editorial clarifications and revisions, 34942–34950
NOTICES
Meetings:
Transportation and Related Equipment Technical Advisory Committee, 35045–35046

Federal Aviation Administration
RULES
Airworthiness directives:
Airbus, 34938–34940
Boeing, 34928–34938
Commander Aircraft Co., 34941–34942
Dassault, 34926–34928
PROPOSED RULES
Airworthiness directives:
Airbus Industrie, 34993–34995

Federal Communications Commission
RULES
Radio stations; table of assignments:
Michigan, 34988–34990
Mississippi et al., 34991
New Mexico, 34989
Texas, 34989
Texas and Oklahoma, 34988
Wyoming, 34990–34991
PROPOSED RULES
Radio stations; table of assignments:
Kentucky, 34996–34997
Michigan, 34998
Texas, 34998
Various States, 34997–34998
NOTICES
Agency information collection activities:
Proposed collection; comment request, 35089–35090
Submission for OMB review; comment request, 35090

Federal Deposit Insurance Corporation
RULES
Consumer financial information; privacy requirements, 35161–35236

Federal Election Commission
NOTICES
Meetings; Sunshine Act, 35090

Federal Energy Regulatory Commission
NOTICES
Electric rate and corporate regulation filings:
Ameren Service Co., et al., 35065–35067
Hydroelectric applications, 35067–35069
Applications, hearings, determinations, etc.:
ANR Pipeline Co., 35058
Arizona Public Service Co., 35058
Colorado Interstate Gas Co., 35058–35059
Dominion Transmission, Inc., 35059
DTE River Rouge No. 1, LLC, 35059
Elkem Metals Co. et al., 35060
El Paso Natural Gas Co., 35059–35060
Energy Trading Co., Inc., 35060–35061
Florida Gas Transmission Co., 35061
Michigan Gas Storage Co., 35061
Northern Natural Gas Co., 35061
Northwest Pipeline Corp., 35061–35062
Ouachita Power, L.L.C, 35062–35063
PG & E Dispersed Generating Co., LLC, 35063
South Georgia Natural Gas Co., 35063
Tennessee Gas Pipeline Co., 35064
Texas Electric Marketing, L.L.C., 35064
TransColorado Gas Transmission Co., 35064–35065
Trunkline LNG Co., 35065
Yadkin, Inc., 35065

Federal Highway Administration
NOTICES
Environmental statements; notice of intent:
Butler County, OH, et al., 35154–35155
Meetings:
Intelligent Transportation Society of America, 35155

Federal Maritime Commission
NOTICES
Agreements filed, etc., 35091
Freight forwarder licenses:
Latin Freight International, Inc., 35091
Ned Shipping Co., Inc., 35091

Federal Reserve System
RULES
Consumer financial information; privacy requirements, 35161–35236
NOTICES
Banks and bank holding companies:
Change in bank control, 35091–35092
Formations, acquisitions, and mergers, 35092
Permissible nonbanking activities, 35093
Domestic policy directives:
Federal Open Market Committee, 35093
Meetings; Sunshine Act, 35093

Fish and Wildlife Service
PROPOSED RULES
Endangered and threatened species:
Buena Vista Lake shrew, 35033–35040
Nesogenes rotensis, etc., 35025–35033
NOTICES
Agency information collection activities:
Submission for OMB review; comment request, 35115
Endangered and threatened species:
Incidental take permits—
Arizona; Gila topminnow desert pupufish, 35116–35117
Endangered and threatened species permit applications, 35115–35116
Environmental statements; availability, etc.:
Incidental take permits—
Indian River County, FL; Florida scrub-jay, 35117–35119
Tazewell County, VA; Clinch River chemical spill, 35119
Pipeline right-of-way applications:
California, 35119–35120
Reports and guidance documents; availability, etc.:
Habitat Conservation Planning Handbook and Incidental Take Permitting Process; final addendum, 35241–35257

Food and Drug Administration
RULES
Human drugs:
Investigational new drugs and new drug applications—
Products intended for life-threatening diseases and conditions; clinical hold regulations, 34963–34971
Organization, functions, and authority delegations:
Deputy Commissioner et al., 34959–34963
NOTICES
Agency information collection activities:
Reporting and recordkeeping requirements, 35099
Meetings:
Nonprescription Drugs and Endocrinologic and Metabolic Drugs Advisory Committees, 35099–35100

General Services Administration
RULES
Federal Management Regulations:
Excess personal property; disposition
Correction, 34983

Grain Inspection, Packers and Stockyards Administration
NOTICES
Agency designation actions:
Various states, 35044–35045

Health and Human Services Department
See Centers for Disease Control and Prevention
See Food and Drug Administration
See Health Care Financing Administration
See Inspector General Office, Health and Human Services Department
See National Institutes of Health
See Public Health Service

Health Care Financing Administration
See Inspector General Office, Health and Human Services Department
RULES
Medicare Program:
State health insurance assistance program; terms and conditions, 34983–34986

Housing and Urban Development Department
NOTICES
Agency information collection activities:
Proposed collection; comment request, 35110–35114

Indian Affairs Bureau
NOTICES
Environmental statements; availability, etc.:
Navajo Nation, AZ and NM; Navajo Ten-Year Forest Management Plan, 35120
Liquor and tobacco sale or distribution ordinance:
Pueblo of Laguna Tribal Council, 35120
Stockbridge-Munsee Community Band of Mohican Indians, 35120

Inspector General Office, Health and Human Services Department
RULES
Privacy Act: implementation, 34986–34988

Interior Department
See Fish and Wildlife Service
See Indian Affairs Bureau
See Land Management Bureau

International Trade Administration
NOTICES
Antidumping:
Freshwater crawfish tail meat from—
China, 35046–35047

International Trade Commission
NOTICES
Meetings; Sunshine Act, 35121–35122

Justice Department
See National Institute of Corrections

Labor Department
See Employment and Training Administration
See Occupational Safety and Health Administration
See Pension and Welfare Benefits Administration

Land Management Bureau
NOTICES
Alaska Native claims selection:
Sitnasuak Native Corp., 35121
Meetings:
Resource Advisory Councils—
Northeast California, 35121

National Archives and Records Administration
RULES
Declassification, 34973–34977
NARA facilities:
Public use; miscellaneous amendments, 34977–34983

National Credit Union Administration
RULES
Credit unions:
Share insurance and appendix, 34921–34926

National Highway Traffic Safety Administration
PROPOSED RULES
Consumer information:
Passenger cars and light multipurpose passenger vehicles and trucks; rollover prevention, 34998–35024

National Institute of Corrections
NOTICES
Grants and cooperative agreements; availability, etc.:
Community education on jails; videotape development, 35122–35124
Prison workforce issues; regional meetings, 35124–35125

National Institutes of Health
NOTICES
Meetings:
National Cancer Institute, 35100
National Center for Complementary & Alternative Medicine, 35100–35101
National Center for Research Resources, 35101
National Human Genome Research Institute, 35101
National Institute of Arthritis and Musculoskeletal and Skin Diseases, 35102
National Institute of Mental Health, 35102–35104
National Institute of Neurological Disorders and Stroke, 35102–35103
National Institute of Nursing Research, 35102
National Institute on Aging, 35103
National Institute on Alcohol Abuse and Alcoholism, 35103–35104
National Institute on Drug Abuse, 35103
National Library of Medicine, 35104–35105
Scientific Review Center, 35105–35107
Patent licenses; non-exclusive, exclusive, or partially exclusive:
BioChem Pharma Inc., 35107
Therion Biologics Corp., 35107–35108
Viragen, Inc., 35108

National Oceanic and Atmospheric Administration
RULES
Fishery conservation and management:
Alaska; fisheries of Exclusive Economic Zone—
Greenland turbot, 34992
Shallow-water species, 34991–34992
PROPOSED RULES
Fishery conservation and management:
Caribbean, Gulf, and South Atlantic fisheries—
Coastal migratory pelagic resources, 35040–35043
Ocean and coastal resource management:
Coastal Zone Management Act Federal consistency regulations, 34995–34996
NOTICES
Marine mammals:
Incidental taking; authorization letters, etc.—
San Francisco-Oakland Bay Bridge, CA; pile installation demonstration project, 35047–35053
Meetings:
Pacific Fishery Management Council, 35053–35054

National Science Foundation
NOTICES
Meetings:
Polar Programs Special Emphasis Panel, 35144

Nuclear Regulatory Commission
RULES
Domestic licensing and related regulatory functions; environmental protection regulations:
Emergency core cooling system evaluation models, 34913–34921
Nuclear Power Plants, maintenance; effectiveness monitoring, 34913
NOTICES
Applications, hearings, determinations, etc.:
Northeast Nuclear Energy Co., 35144

Occupational Safety and Health Administration
NOTICES
Agency information collection activities:
Proposed collection; comment request, 35126–35128

Pension and Welfare Benefits Administration
NOTICES
Employee benefit plans; prohibited transaction exemptions:
Fish Lake Beach, Inc., 35128
Morgan Guaranty Trust Company of New York, et al., 35128–35137
Salomon Smith Barney, Inc., 35137–35143

Public Health Service
See Centers for Disease Control and Prevention
See Food and Drug Administration
See National Institutes of Health
NOTICES
Meetings:
National Toxicology Program—
Revised Up-and-Down Procedure as an alternative test method for assessing acute oral toxicity; peer review, 35108–35110

Securities and Exchange Commission
NOTICES
Options price reporting authority:
Participation fee payable by each new party to plan, 35146–35147
Self-regulatory organizations; proposed rule changes:
Chicago Board Options Exchange, Inc., 35148–35149
Pacific Exchange, Inc., 35149–35151
Philadelphia Stock Exchange, Inc., 35151–35152
Applications, hearings, determinations, etc.:
Armada Funds, et al., 35144–35146

Small Business Administration
NOTICES
License surrenders:
Capital Resource Co. of Connecticut, 35152

Social Security Administration
RULES
Social security benefits:
Federal old age, survivors, and disability insurance and supplemental security income—
Aged blind and disabled; medical and other evidence of impairment, etc., 34950–34959
NOTICES
Agency information collection activities:
Proposed collection; comment request, 35152–35153

Tennessee Valley Authority
NOTICES
Reports and guidance documents; availability, etc.:
Electric generating stations; routine maintenance, 35153–35154

Thrift Supervision Office
RULES
Consumer financial information; privacy requirements, 35161–35236
NOTICES
Agency information collection activities:
Proposed collection; comment request, 35157–35158

Transportation Department
See Coast Guard
See Federal Aviation Administration
See Federal Highway Administration
See National Highway Traffic Safety Administration

Treasury Department
See Comptroller of the Currency
See Thrift Supervision Office
NOTICES
Agency information collection activities:
Submission for OMB review; comment request, 35155–35156

Veterans Affairs Department
NOTICES
Agency information collection activities:
Proposed collection; comment request, 35158
Submission for OMB review; comment request, 35158–35159

Separate Parts In This Issue

Part II
Comptroller of the Currency, Office of Thrift Supervision, Department of the Treasury; Federal Reserve System; Federal Deposit Insurance Corporation, 35161–35236

Part III
Department of Education, 35237–35239

Part IV
Fish and Wildlife Service, Department of the Interior; National Oceanic and Atmospheric Administration, Department of Commerce, 35241–35257

Reader Aids
Consult the Reader Aids section at the end of this issue for phone numbers, online resources, finding aids, reminders, and notice of recently enacted public laws.

CFR PARTS AFFECTED IN THIS ISSUE

A cumulative list of the parts affected this month can be found in the Reader Aids section at the end of this issue.

10 CFR
50 (2 documents) 34913

12 CFR
40.....35162
216.....35162
332.....35162
573.....35162
745.....34921

14 CFR
39 (6 documents) 34926, 34928, 34932, 34935, 34938, 34941

Proposed Rules:
39.....34993

15 CFR
760.....34942

Proposed Rules:
930.....34995

20 CFR
404.....34950
416.....34950

21 CFR
5.....34959
312.....34963

33 CFR
165.....34971

36 CFR
1260.....34973
1280.....34977

40 CFR

Proposed Rules:
434.....34996

41 CFR
102-36.....34983

42 CFR
403.....34983

45 CFR
5b.....34986

47 CFR
73 (8 documents) 34988, 34989, 34990, 34991

Proposed Rules:
73 (4 documents) 34996, 34997, 34998

49 CFR

Proposed Rules:
575.....34998

50 CFR
679 (2 documents) 34991, 34992

Proposed Rules:
17 (2 documents) 35025, 35033
622.....35040

Rules and Regulations

Federal Register

Vol. 65, No. 106

Thursday, June 1, 2000

This section of the FEDERAL REGISTER contains regulatory documents having general applicability and legal effect, most of which are keyed to and codified in the Code of Federal Regulations, which is published under 50 titles pursuant to 44 U.S.C. 1510.

The Code of Federal Regulations is sold by the Superintendent of Documents. Prices of new books are listed in the first FEDERAL REGISTER issue of each week.

NUCLEAR REGULATORY COMMISSION

10 CFR Part 50

RIN 3150–AF95

Monitoring the Effectiveness of Maintenance at Nuclear Power Plants; Confirmation of Effective Date and Availability of Guidance

AGENCY: Nuclear Regulatory Commission.

ACTION: Final rule: Confirmation of effective date and availability of guidance.

SUMMARY: The Nuclear Regulatory Commission amended its regulation concerning requirements for monitoring the effectiveness of maintenance at nuclear power plants on July 19, 1999 (64 FR 38551). The effective date of this amendment was deferred until guidance on assessing and managing increases in risk associated with maintenance activities was issued to nuclear power plant licensees. This document announces the availability of that guidance (Regulatory Guide 1.182, ''Assessing and Managing Risk Before Maintenance Activities at Nuclear Power Plants'') and specifies the effective date for the July 19, 1999, amendment to the maintenance rule.

EFFECTIVE DATE: November 28, 2000.

ADDRESSES: Regulations, certain regulatory guides, and certain endorsed NUMARC documents are available for inspection or downloading at the NRC's web site, <*WWW.NRC.GOV*>. Single copies of regulatory guides may be obtained free of charge by writing the Reproduction and Distribution Services Section, U.S. Nuclear Regulatory Commission, Washington, DC 20555–0001, or by fax to (301) 415–2289, or by email to <*DISTRIBUTION@NRC.GOV*>. Issued guides may also be purchased from the National Technical Information Service on a standing order basis. Details on this service may be obtained by writing NTIS, 5285 Port Royal Road, Springfield, VA 22161. Copies of regulations, regulatory guides, and endorsed NUMARC documents are available for inspection or copying for a fee from the NRC Public Document Room at 2120 L Street NW., Washington, DC; the PDR's mailing address is Mail Stop LL–6, Washington, DC 20555; telephone (202) 634–3273 or (800) 397–4209; fax (202) 634–3343; email <PDR@NRC.GOV>.

Comments and suggestions in connection with items for inclusion in regulations and regulatory guides are encouraged at any time. Written comments may be submitted to the Rules and Directives Branch, Office of Administration, U.S. Nuclear Regulatory Commission, Washington, DC 20555.

FOR FURTHER INFORMATION CONTACT: W.E. Scott, Office of Nuclear Reactor Regulation, U.S. Nuclear Regulatory Commission, Washington, DC 20555; telephone (301) 415–1020; email <WES@NRC.GOV>.

SUPPLEMENTARY INFORMATION:

Background

The Nuclear Regulatory Commission amended its maintenance rule, 10 CFR 50.65, ''Requirements for monitoring the effectiveness of maintenance at nuclear power plants,'' on July 19, 1999 (64 FR 38551). This amendment requires nuclear power plant licensees to assess and manage the increase in risk that may result from proposed maintenance activities. The implementation date of this amendment was made dependent upon guidance being issued to nuclear power plant licensees on assessing and managing increases in risk associated with maintenance activities.

Rather than issue Revision 3 to Regulatory Guide 1.160, ''Monitoring the Effectiveness of Maintenance at Nuclear Power Plants,'' the NRC staff decided to issue Regulatory Guide 1.182, ''Assessing and Managing Risk Before Maintenance Activities at Nuclear Power Plants,'' as guidance to nuclear power plant licensees on assessing and managing risk before maintenance activities are conducted at the nuclear power plant. Regulatory Guide 1.182 is being issued as a companion guide to Regulatory Guide 1.160, which provides guidance on the structure of the licensees' maintenance effectiveness monitoring programs.

Regulatory Guide 1.160 endorses a document prepared by the Nuclear Energy Institute (formerly NUMARC), NUMARC 93–01, ''Industry Guideline for Monitoring the Effectiveness of Maintenance at Nuclear Power Plants.'' Regulatory Guide 1.182 endorses a revised Section 11, ''Assessment of Risk Resulting from Performance of Maintenance Activities,'' of NUMARC 93–01. Regulatory Guide 1.182 was published for public comment (64 FR 70098, December 15, 1999) as DG–1082, ''Assessing and Managing Risk Before Maintenance Activities at Nuclear Power Plants.'' There were no public comments on the draft guide, and NEI addressed the comments on Section 11 of NUMARC 93–01 with minor revisions, and the NRC staff concurs in these revisions.

Therefore, the effective date of the July 19, 1999, amendment to 10 CFR 50.65 is November 28, 2000.

Dated at Rockville, Maryland, this 26th day of May, 2000.

For the Nuclear Regulatory Commission.

J. Samuel Walker,

Acting Secretary of the Commission.

[FR Doc. 00–13746 Filed 5–31–00; 8:45 am]

BILLING CODE 7590–01–P

NUCLEAR REGULATORY COMMISSION

10 CFR Part 50

RIN 3150–AG26

Emergency Core Cooling System Evaluation Models

AGENCY: Nuclear Regulatory Commission.

ACTION: Final rule.

SUMMARY: The Nuclear Regulatory Commission (NRC) is amending its regulations to allow holders of operating licenses for nuclear power plants to reduce the assumed reactor power level used in evaluations of emergency core cooling system (ECCS) performance. This amendment provides licensees the option to apply a reduced margin for ECCS evaluation or to maintain the value of reactor power that had been mandated in the regulation. This action allows interested licensees to pursue small, but cost-beneficial, power uprates and reduces unnecessary regulatory

burden without compromising the margin of safety of a facility.

EFFECTIVE DATE: The rule becomes effective July 31, 2000.

ADDRESSES: The final rule and any related documents are available on the NRC's rulemaking website at http://ruleforum.llnl.gov. For information about the interactive rulemaking website, contact Ms. Carol Gallagher, (301) 415–5905 (e-mail: cag@nrc.gov).

FOR FURTHER INFORMATION CONTACT: Mr. Joseph E. Donoghue, Office of Nuclear Reactor Regulation, U.S. Nuclear Regulatory Commission, Washington, DC 20555–0001; telephone: 301–415–1131; or by Internet electronic mail to jed1@nrc.gov.

SUPPLEMENTARY INFORMATION:

Background

A holder of an operating license (i.e., the licensee) for a light-water power reactor is required by regulations issued by the NRC to submit a safety analysis report that contains an evaluation of emergency core cooling system (ECCS) performance under loss-of-coolant accident (LOCA) conditions. 10 CFR 50.46, ''Acceptance criteria for emergency core cooling systems for light-water nuclear power reactors,'' requires that ECCS performance under LOCA conditions be evaluated and that the estimated performance satisfy certain criteria. Licensees may conduct an analysis that ''realistically describes the behavior of the reactor system during a LOCA'' (often termed a ''best-estimate analysis''), or they may develop a model that conforms with the requirements of Appendix K to 10 CFR part 50. Most ECCS evaluations are based on Appendix K requirements. Before this revision, the opening sentence of Appendix K specified that a power level of 102 percent be assumed when conducting ECCS analyses. Licensees have proposed using instrumentation that would reduce the uncertainties associated with measurement of reactor power when compared with existing methods of power measurement. This development could justify a reduced margin between the licensed power level and the power level assumed for ECCS evaluations. This final rule amends this provision in Appendix K and allows licensees the option of using a value lower than 102 percent of licensed power in their ECCS analyses where justified.

Several licensees have expressed interest in using updated feedwater flow measurement technology discussed later in ''Calorimetric Uncertainty and Feedwater Flow Measurement'' as a basis for seeking exemptions from the Appendix K power level requirement and to implement power uprates. One licensee, TXU Electric Company, obtained an exemption from the Appendix K requirement for Comanche Peak Units 1 and 2 as well as an increase in licensed power based, in part, on more accurate feedwater flow measurement capability. The prospect of additional exemption requests from other licensees provides the impetus for the final rule.

The objective of this rulemaking is to reduce an unnecessarily burdensome regulatory requirement. Appendix K was originally issued to ensure an adequate performance margin of the ECCS in the event a design-basis LOCA were to occur. The margin is provided by conservative features and requirements of the evaluation models and by the ECCS performance criteria. The original regulation did not require that the power measurement uncertainty be demonstrated, but rather mandated a 2-percent margin. The final rule allows licensees to justify a smaller margin for power measurement uncertainty. Because there will continue to be substantial conservatism in other Appendix K requirements, sufficient margin to ECCS performance in the event of a LOCA will be preserved, which is the underlying purpose of Appendix K. The final rule does not significantly affect plant risk, as discussed in the section entitled, ''ECCS Evaluation Conservatism.''

Another objective is to avoid unnecessary exemption requests. A licensee has obtained an exemption from the 2-percent margin requirement in 10 CFR part 50, Appendix K. The final rule eliminates the need for licensees to obtain exemptions.

The final rule gives licensees the option of applying a reduced margin between the licensed power level and the assumed power level for ECCS evaluation, or maintaining the current margin of 2-percent power. As discussed in the section entitled ''ECCS Evaluation Conservatism,'' the NRC has concluded that the 2 percent power margin requirement in the original rule appeared to be based solely on considerations associated with power measurement extant at the time of the original ECCS rulemaking. The original rule unnecessarily restricted operation for licensees that can show that the uncertainties associated with power measurement instrumentation errors are less than 2 percent.

This amendment gives licensees the opportunity to use a reduced margin if they determine that there is a sufficient benefit. Licensees may apply the margin to gain benefits from operation at higher power, or the margin could be used to relax ECCS-related technical specifications (*e.g.,* pump flows). Another potential benefit could be in modifying fuel management strategies (*e.g.,* possibly by altering core power peaking factors). However, the final rule, by itself, does not allow increases in licensed power levels. Because licensed power level for a plant is a technical specification limit, proposals to raise the licensed power level must be reviewed and approved under the license amendment process. The license amendment request should include a justification of the reduced power measurement uncertainty and the basis for the modified ECCS analysis, including the justification for reduced power measurement uncertainty, should then be included in documentation supporting the ECCS analysis (see Section-by-Section Analysis).

As licensees apply the final rule and the NRC gains experience reviewing related license amendment requests, the NRC will consider the need for specific guidance to help licensees appropriately account for power measurement uncertainty in safety analyses. In the absence of specific guidance, the NRC expects that power uprate amendment requests based on this amendment to the regulations will address the suitability of non-LOCA analyses for operation at proposed higher power levels. Licensees can refer to available instrumentation guidance such as the Instrument Society of America Standard ISA 67.04, 1982, ''Safety-Related Instrumentation Used in Nuclear Power Plants,'' and NRC Regulatory Guide 1.105, Revision 2, ''Instrument Setpoints for Safety-Related Systems.''

Conservatisms in Appendix K ECCS Evaluation Model

Appendix K defines conservative analysis assumptions for ECCS performance evaluations during design-basis LOCAs. Large safety margins are provided by conservatively selecting the ECCS performance criteria as well as conservatively establishing ECCS calculational requirements. The major analytical parameters and assumptions that contribute to the conservatisms in Appendix K are set forth in sections A through D of the rule: (A) ''Sources of Heat During the LOCA'' (the 102-percent power provision is a key factor); (B) ''Swelling and Rupture of the Cladding and Fuel Rod Thermal Parameters;'' (C) ''Blowdown Phenomena;'' and (D) ''Post-Blowdown Phenomena: Heat Removal by ECCS.'' In each of these areas, several assumptions are typically used to ensure substantial conservatism in the analysis results. For

instance: under ''Sources of Heat During the LOCA,'' decay heat is modeled on the basis of an American Nuclear Society standard with an added 20-percent penalty, and the power distribution shape and peaking factors expected during the operating cycle are chosen to yield the most conservative results. In ''Blowdown Phenomena,'' the rule requires use of the Moody model and the discharge coefficient that yields the highest peak cladding temperature. ''Post-Blowdown Phenomena; Heat Removal by the ECCS,'' requires that the analysis assume the most damaging single failure of ECCS equipment.

One of several conservative requirements in section A of the original Appendix K was to assume that the reactor was operating at 102 percent power when the LOCA occurred ''to allow for such uncertainties as instrumentation error * * *.'' (Appendix K, section I.A., first sentence, emphasis added). The phrase, ''such as,'' suggested that the two percent power margin was intended to address uncertainties related to heat source considerations beyond instrument measurement uncertainties. However, the basis for the required assumption of 102 percent power (2 percent power margin) does not appear to be contained in the rulemaking record for the ECCS rules, 10 CFR 50.46 and Appendix K. These rules were adopted in 1974 (39 FR 1001; January 4, 1974), and were preceded by a formal rulemaking hearing which ultimately resulted in a Commission decision on the proposed rulemaking, CLI–73–39, 6 AEC 1085 (December 28, 1973). Neither the statement of considerations (SOC) for the final rule nor the Commission decision appear to provide specific basis for the required assumption of 102 percent power.

The SOC for the January 4, 1974, final rule discusses the 102 percent power assumption in general terms, and does not mention instrumentation uncertainty:

> The Commission believes that the implementation of the new regulations will ensure an adequate margin of performance of the ECCS should a design basis LOCA ever occur. This margin is provided by conservative features of the evaluation models and by the criteria themselves. Some of the major points that contribute to the conservative nature of the evaluations and the criteria are as follows:
>
> (1) *Stored heat.* The assumption of 102 percent of maximum power, highest allowed peaking factor, and highest estimated thermal resistance between the UO_2 and the cladding provides a calculated stored heat that is possible but unlikely to occur at the time of a hypothetical accident. While not necessarily a margin over the extreme condition, it represents at least an assumption that an accident happens at a time which is not typical. 39 FR at 1002 (first column).[1]

Thus, while the pre-accident power level assumption is connected with the modeling of the rate of heat generation after the LOCA occurs, a clear basis for the 102 percent assumed power level requirement is not provided, nor does the SOC explain whether there are other uncertainties besides instrumentation uncertainties for which the 102 percent assumed power level is intended to compensate.

The Commission's decision in the ECCS rulemaking hearing also does not explain whether the 102 percent assumed power level was intended to address uncertainties other than instrumentation uncertainties. Section I of the Commission decision was the basis for the SOC discussion on the 102 percent assumed power level (see 6 AEC at 1093–94). Section III. A. of the Commission's decision, ''Required and Acceptable Features of the Evaluation Model,'' does not offer a detailed technical basis for the power level chosen, but instead uses the language ultimately adopted in the original Appendix K rule:

> For the heat sources listed in paragraphs 1 to 4 below it shall be assumed that the reactor has been operating continuously at a power level at least 1.02 times the licensed power level (to allow for such uncertainties as instrumentation error), with the maximum peaking factor allowed by the technical specifications (6 AEC at 1100).

Thus, the Commission's decision does not shed further light on the basis for the 102 percent assumed power level, nor whether the Commission had in mind uncertainties other than those associated with the instrumentation for measurement of power level.

NRC review of the ECCS rulemaking hearing record did not disclose presentations relating to quantification of power measurement uncertainties, or the magnitude of other uncertainties that the 102 percent assumed power level may have been intended to address. The Commission decision (CLI–73–39, 6 AEC 1085, December 28, 1973) cited three documents in the rulemaking hearing record.

The first, cited in the Commission decision as Exhibit 1113, was ''Supplemental Testimony of the AEC Regulatory Staff on the Interim Acceptance Criteria for Emergency Core Cooling Systems for Light-Water Cooled Power Reactors'' (filed October 26, 1972). In section 10 of the document, stored energy in the fuel was considered, specifically the expected power distributions in fuel rods. The 102-percent power analysis requirement is not discussed.

The second item, cited in the Commission decision as Exhibit 1137 was ''Redirect and Rebuttal Testimony of Dr. Donald H. Roy on Behalf of Babcock & Wilcox,'' (October 26, 1972) in which the characteristic of the decay heat release following reactor shutdown was discussed. In this document, the 102-percent assumption is associated with the predicted decay heat generation rate. The over-power condition is associated with a ''design-basis maneuvering operation,'' but the basis for the value of power chosen for the analysis (*i.e.,* 102 percent) is not disclosed.

Finally, in the ''Concluding Statement of Position of the Regulatory Staff—Public Rulemaking Hearing on: Acceptance Criteria for Emergency Core Cooling Systems for Light-Water Cooled Nuclear Power Reactors,'' April 16, 1973 (the Concluding Statement), the power level assumption is included as part of the proposed rule itself. The proposed rule language clearly states that the power level assumption is to ''allow for instrumentation error.'' The term ''such as'' does not appear here. It is unclear when or why the proposed language in this regard was changed to its current form. The power level assumption is mentioned again in the Concluding Statement indirectly in association with power level changes before the LOCA and the effect on decay heat generation. But it is discussed most directly with regard to initial stored energy in the fuel. In the discussion on stored energy, the 102-percent assumption is attributed to ''uncertainties inherent in the measurement of the operating power level of the core'' (page 144 of the Concluding Statement). Reasons for choosing 102-percent as the value are not discussed.

When Appendix K was first issued, as is the case today, the thermal power generated by a nuclear power plant was determined by steam plant calorimetry, which is the process of performing a heat balance around the nuclear steam supply system (called a calorimetric). The heat balance depends upon measurement of several plant parameters, including flow rates and fluid temperatures. The differential pressure across a venturi installed in the feedwater flow path is a key element in the calorimetric measurement. Licensees have proposed using instrumentation other than a venturi-

[1] This statement in the SOC was taken unchanged from section I of the Commission's ECCS decision. See CLI–73–39, 6 AEC 1085, 1093–94 (December 28, 1973).

based system to obtain feedwater flow rate for calorimetrics. The lower uncertainty associated with the new instrumentation is information that was apparently not available during the original Appendix K rulemaking.

In view of the regulatory history for Appendix K, the Commission now believes that the 2-percent margin embodied in the requirement for a 102-percent assumed power level in Appendix K was based solely on uncertainties associated with the measurement of reactor power level.

Reduction in 102 Percent Assumed Power Level

The Commission believes that other requirements of Appendix K modeling contain substantial conservatisms of much greater magnitude than the 2 percent margin embodied in the requirement for a 102 percent assumed power level. This point was discussed in ''Conservatisms in Appendix K ECCS Evaluation Model,'' above.

The Commission is also aware of new information gained since the 1974 rulemaking which shows that the Appendix K model contains additional conservatisms not recognized in 1974. Evidence from experiments designed to simulate LOCA phenomena suggest that these conservatisms added hundreds of degrees Fahrenheit to the prediction of peak fuel cladding temperature than would actually occur during a LOCA. The significant conservatism was necessary when the rule was written because of a lack of experimental evidence at that time with respect to the relative effects of analysis input parameters, including pre-accident power level. Since that time, there has been substantial additional research on LOCA. NUREG–1230, ''Compendium of ECCS Research for Realistic LOCA Analysis,'' December 1988, contains the technical basis for improved understanding of LOCA progression and ECCS evaluation gained after the ECCS rule was issued. The NUREG includes a discussion of the basis for uncertainties in detailed fuel bundle power calculations as part of the consideration of overall calculational uncertainty inherent in best-estimate evaluations. Chapters 7 and 8 of the NUREG include consideration of the changes in licensed power level that could result from application of best-estimate evaluation methods. The discussion includes an estimated sensitivity of predicted peak clad temperature (PCT) associated with changes in pre-accident power level. From that estimate, the NRC expects peak cladding temperature changes of approximately 15 °F to result from 1-percent changes in plant power level that could result from the final rule.

In view of: (i) Substantial conservatisms known in 1974 that were embodied in the Appendix K requirements for ECCS evaluations; (ii) new information developed since the 1974 rulemaking which shows additional conservatism in the Appendix K modeling requirements beyond that understood by the Commission when it adopted the 1974 rule; and (iii) the relative insensitivity of the calculated clad temperatures to assumed power level, the Commission concludes that it is acceptable to allow a reduction in the currently-required 102 percent power level assumption if justified by the actual power level measurement instrumentation uncertainty. Accordingly, the Commission is amending the Appendix K requirement for an assumed 102 percent power level. This amendment allows a licensee to use an assumed power level of less than 102 percent (but not less than 100 percent), if the licensee has determined that the uncertainties in the measurement of core power level justifies the reduced margin.

Calorimetric Uncertainty and Feedwater Flow Measurement

The NRC staff has approved an exemption to the 102-percent power level requirement for Comanche Peak Units 1 and 2. The basis for the action is application of upgraded feedwater flow measurement technology at the plant. As indicated, the prospect of additional licensees requesting similar action has prompted the final rule. Other methods, systems, or analyses could be used as the basis for demonstrating reduced power measurement uncertainty.

In most nuclear power plants, operators obtain a continuous indication of core thermal power from nuclear instruments that provide a measurement of neutron flux. The nuclear instruments must be periodically calibrated to counteract the effects of changes in flux pattern, fuel burnup, and instrument drift. Steam plant calorimetry, which is the process of performing a heat balance around the nuclear steam supply system (called a calorimetric), is used to determine core thermal power and is the basis for the calibration. The differential pressure across a venturi installed in the feedwater flow path is a key element in the calorimetric measurement. Some plants use this calorimetric value directly to indicate thermal power; the nuclear instruments are used as anticipatory indicators for transients and for reactivity adjustments made with the control rods.

The system in use at Comanche Peak Units 1 and 2 is the Leading Edge Flowmeter (LEFM), manufactured by Caldon, Inc. The LEFM system is an ultrasonic flow meter that measures the transit times of pulses traveling along parallel acoustic paths through the flowing fluid. LEFM technology has been employed in non-nuclear applications, such as petroleum, chemical, and hydroelectric plants for several years. This operating experience will provide reliability data, supplementing data from nuclear applications. Additional information on the Comanche Peak Appendix K exemption and on the Caldon, Inc. LEFM system appears in safety evaluations issued by the NRC staff on March 8, 1999, and May 6, 1999.

The NRC issued a safety evaluation on March 20, 2000, on the ABB Combustion Engineering ultrasonic flow-measuring system known as Crossflow. The Crossflow system is expected to be part of a licensee amendment request for power uprate in the near future.

Public Comment

In the proposed rulemaking (64 FR 53270; October 1, 1999), the NRC sought comments from the public on four issues related to the revision of Appendix K. The NRC received comments from four utility companies, the Nuclear Energy Institute (NEI), and Caldon, Inc., manufacturer of the LEFM system. All of the commenters supported the proposed rule. NEI and Caldon offered comments on the four issues that the Commission included in the proposed rule. NEI and the New York Power Authority commented on several other issues as well.

The issues that accompanied the proposed rule were:

1. The current rule states that the required 2-percent analysis margin is to account for ''*such* uncertainties *as* instrumentation error * * *.'' (emphasis added). This suggests that the 2-percent margin was intended to account for other sources of uncertainty in addition to instrumentation error. However, explicit documentation of the basis for the value of the margin does not appear to be contained in the rulemaking record for the original 1974 ECCS rulemaking. The Commission was interested in whether there were other sources of uncertainty, relevant to sources of heat following a LOCA, that should be considered when licensees seek to reduce the margin in the Appendix K requirement for assumed power.

As discussed in the section entitled, ''Conservatisms in Appendix K ECCS Evaluation Model,'' the Commission considered the rulemaking historical record for Appendix K and concluded that instrument uncertainty was likely the only source of uncertainty that was to be accounted for by the 2-percent margin. NEI and Caldon have not identified other sources of uncertainty, relevant to sources of heat following a LOCA, that are connected with the power level assumption.

2. Were there rulemaking alternatives to the proposed rule that were not considered in the regulatory analysis?

The Commission considered rulemaking alternatives in the accompanying regulatory analysis. The alternatives were: (i) No rule change; (ii) removal of the 102 percent requirement while requiring justification of a power level margin; (iii) the approach taken in the amended rule to maintain the 102 percent requirement and offer the option to reduce the margin; (iv) elimination of the power level margin; and (v) broad revision of Appendix K addressing all analysis requirements. Additional alternatives were not identified in the comments received for the proposed rule.

3. What criteria should be used for determining whether a proposed reduction in the 2 percent power margin has been justified, based upon a determination of instrumentation error? For example, should a demonstrated instrumentation error of 1 percent in power level be presumptive of an acceptable reduction in assumed power margin of 1 percent?

The comments from NEI on this point emphasized that any criteria developed to evaluate proposed reductions in ECCS analysis power margin should be based only on the instrumentation error associated with power measurement. NEI said that the conservatism inherent in the ECCS analysis requirements embodied in Appendix K provide sufficient margin to maintain safety so that instrumentation uncertainty should be the only basis for the power level assumption. The comments also stated that the overall impact on safety should be considered and that degradation in safety should not be allowed.

The Commission agrees that the main criteria determining the suitability of proposed power level margin reductions should be the details associated with uncertainties in power level measurement. The Commission also agrees that the overall impact on plant safety should be considered, preferably in a risk-informed manner. However, the commenter contended that a lower probability of exceeding the analyzed power level translates to an overall improved level of safety at a facility. The Commission does not necessarily equate a lower probability of exceeding an analysis limit with improved safety for facilities that obtain approvals to increase reactor thermal power or make other changes based on the amendment. For example, when plants obtain power uprates in conjunction with the relaxation in the amended rule, other factors come into play that may reduce the overall margin of safety, albeit probably only slightly for the small power increases anticipated with the amendment. Such changes in safety margin, if small and controlled, can be acceptable in light of other substantial conservatisms or associated risk-related information.

Caldon offered detailed comments on this issue. Their comments went beyond general instrumentation uncertainty considerations by proposing a list of criteria that appeared to be based on application of the LEFM to power measurement at a plant. Although the Commission considers the criteria provided by Caldon to be helpful, the Commission is not yet prepared to formalize any criteria for evaluating reductions in the power level margin for ECCS analysis. The safety evaluations associated with the Appendix K exemption and power uprate for Comanche Peak granted to TXU Electric Company set forth basic review criteria, including many of those proposed by Caldon. In those reviews, the NRC staff referred to available instrumentation guidance such as the Instrument Society of America Standard ISA 67.04, 1982, ''Safety-Related Instrumentation Used in Nuclear Power Plants,'' and NRC Regulatory Guide 1.105, Revision 2, ''Instrument Setpoints for Safety-Related Systems.''

The NRC staff intends to gain further experience with licensee proposals that pursue the relaxation offered by the amendment before deciding whether a regulatory guide providing detailed acceptance criteria needs to be developed. Licensee proposals may involve use of advanced flow measurement systems or other approaches to determine the level of power measurement uncertainty and to reduce it. However, the Commission does not believe that generic acceptance criteria should be too closely based on any particular measurement technology or analysis method.

4. How should the rule address cases in which licensees determine that power measurement instrument error is greater than 2 percent?

Both NEI and Caldon offered comments on this issue. Caldon maintained that current regulatory processes provide a sufficient basis for dealing with such situations. NEI recommended that licensees should conduct Appendix K ECCS evaluations at rated thermal power level plus the value of power measurement uncertainties, regardless of the magnitude of the uncertainty. The comments clearly stated that this position also applies for uncertainties determined to be greater than 2 percent. NEI considered the need for licensees to ensure that safety analyses are valid for their facility. According to NEI, if the required margin for power level measurement were found to be insufficient to account for actual uncertainty levels, then licensees must take appropriate action, including lowering the operating power level. NEI offered alternatives for licensees to accommodate uncertainties above 2 percent, including demonstration that the PCT margin for a facility could accommodate greater-than-expected uncertainty. Also, NEI indicated that other conservatisms in Appendix K methodologies could be applied to ''offset'' the excessive power measurement uncertainty.

The Commission agrees that licensees who find that the power measurement uncertainty for their facilities is greater than expected should take action to ensure that their plant is operated within the assumptions used in safety analyses. This follows from the requirement in 10 CFR 50 Appendix B, section III, ''Design Control.'' The Appendix B requirement states that design control measures will be applied to items such as accident analyses, and that design changes shall be subject to design control measures. Therefore, licensees must take action if the power measurement uncertainty is greater than typically expected or as determined in a plant-specific analysis. The expected magnitude of uncertainty at a facility could be the 2-percent margin that is preserved in the final rule, or it could be based on a plant-specific analysis supporting a smaller value. As already considered, the basis for the value in the rule is not clearly illuminated in the rulemaking history of Appendix K. However, the Commission believes that the Appendix K value represents a typical value for power measurement uncertainty, unless demonstrated otherwise for a particular facility.

The Commission does not believe that it is necessary to allow application of safety margins based on other conservative factors in an Appendix K ECCS evaluation to offset excessive uncertainties discovered in power measurement for a plant. By proposing

to use safety margin ''offsets'' to justify higher-than-expected power measurement uncertainties, NEI is proposing an alternative to Appendix K ECCS evaluation methods already permitted by § 50.46. The Commission considers the available analysis alternatives offered by § 50.46 (*i.e.,* those based on Appendix K and the so-called best estimate methods) to offer sufficient flexibility to licensees without introducing large complexities to the review and approval process that could be anticipated if Appendix K were to be applied in a ''piecemeal'' fashion.

The Commission originally instituted the ECCS evaluation requirements with the understanding that substantial conservatisms existed. Later, the relative contributions of various conservative factors were estimated on a largely generic basis to demonstrate the feasibility of best-estimate evaluations. However, when the revisions to § 50.46 were considered in 1988, the Commission deliberately maintained two distinct options: (i) Licensees could use the method defined by Appendix K; or (ii) they could develop a best-estimate approach. The alternatives discussed in the NEI comment can be accommodated by a licensee using the best-estimate option offered by § 50.46, rather than applying Appendix K in a ''piecemeal'' fashion.

On the basis of the ''best-estimate'' alternative to Appendix K requirements available in § 50.46, the Commission takes the position that Appendix K requirements should not be applied in a ''piecemeal'' fashion, as discussed in the NEI comment. Rather than searching for customized adjustments to Appendix K requirements, licensees should develop a ''best-estimate'' method, as permitted in § 50.46. The Commission position does not present licensees with an onerous burden. Licensees discovering that actual power measurement uncertainty at their plant is greater than the uncertainty assumed in safety analysis can take corrective action to address the problem while continuing plant operation. For example, plant power level may be reduced while the problem is addressed. Therefore, in the final rule the Commission has not adopted the NEI approach of applying offsetting uncertainties.

The comments received from NEI addressed four additional areas:

1. *Uncertainties from additional heat sources.* NEI commented that utilities would be able to use the amended rule to reduce the decay heat input used in Appendix K evaluations. NEI proposed that licensees could use the power measurement uncertainty to, ''ensure that the expected decay heat bounds the full rated plant power plus the uncertainty value.''

The NEI comment expands the scope of the proposed revision to Appendix K, bringing into consideration decay heat uncertainty, which is a separate analysis requirement in the rule. The Commission agrees that the decay heat level used in the Appendix K analysis could be reduced commensurate with a lower assumed power level. However, the reduced power level assumption must be justified by an acceptable analysis of the power measurement uncertainty. Also, the decay heat level used in the analysis must continue to meet the requirement in Appendix K(I)(A)(4), ''Fission Product Decay.'' Discussion of the uncertainty involved with decay heat value required by Appendix K(I)(A)(4) is beyond the scope of this rulemaking. Licensees who wish to address the uncertainty of the decay heat level in their ECCS analysis should develop a ''best-estimate'' method which addresses uncertainties of all of the ECCS analysis parameters.

2. *Consistency among NRC documents.* NEI pointed out that other Commission documents besides Appendix K contain the 1.02 power level multiplier. In the regulatory analysis accompanying the rule, the Standard Review Plan sections and Regulatory Guide 1.49 are listed as part of the current regulatory framework considered during the rulemaking.

The NRC staff agrees with the comment that changes to guidance documents may be necessary and will make the necessary revisions to these documents to maintain consistency with the amended rule.

3. *Requirement for upgrade to feedwater flow measurement.* NEI commented that the proposed rule appeared to be based upon application of upgraded feedwater flow technology. NEI recommended that the rule or associated guidance make clear that availability of the relaxation offered by the final rule is not restricted to licensees applying upgraded flow measurement technology.

The preamble for the proposed rule does indeed discuss application of improved flow measurement technology. This discussion is appropriate because this new technology is the impetus for the exemption granted to one licensee and is a key justification for the Commission action in amending the current rule. In the section, ''Calorimetric Uncertainty and Feedwater Flow Measurement,'' the Commission pointed out that methods other than application of improved flow measurement technology could be used as the basis for demonstrating reduced power measurement uncertainty. Also, in its discussion of the Caldon comments on issue number 3, the Commission acknowledged that licensee proposals may involve use of advanced flow measurement systems or other approaches. To prevent misinterpretation of the rule, the Section-by-Section analysis has been modified to reiterate that other methods not considered in the rulemaking could be used to justify a reduced power measurement uncertainty allowance. Although various approaches to reduce the uncertainty involved with PCT calculation may be used, the only uncertainty considered under this amendment is that associated with power level measurement.

4. *Reportability under 10 CFR 50.46(a)(3).* NEI cited the Section-by-Section analysis of the proposed rule, where the Commission stated that, ''estimated changes in ECCS performance due to final analysis inputs are reported under section 50.46 (a)(3), at least annually.'' NEI recommended clarification of the statement to reflect an interpretation of § 50.46 so as to relate only to evaluation model parameters, but not to plant design parameters. NEI contended that plant parameters change from cycle to cycle and that changes in PCT caused by plant specific input parameter changes to design information fall outside the scope of reportability under 10 CFR 50.46(a)(3).

Although the Commission accepts that the results of ECCS evaluations could change as a result of cycle specific variations in model inputs, the Commission does not agree with NEI on this point. In their comment, NEI drew a distinction between design inputs and model inputs to ECCS evaluations. The amended rule does not change the reporting requirements of 10 CFR 50.46 for changes to ECCS evaluations. The regulations are clear on the definition of an ECCS evaluation model and when reports are required. 10 CFR 50.46 (c)(2) defines ECCS evaluation models and provides a list of the elements including, ''one or more computer programs and all other information necessary for application of the calculational framework to a specific LOCA, such as * * * values of parameters, and all other information necessary to specify the calculational procedure.'' In other words, the ECCS evaluation model is comprised of the computer code or codes, the input parameters (including plant-specific design parameters), and the calculational results. The Commission should be informed as described in 10

CFR 50.46(a)(3) when even a relatively small change to the calculational framework is made, especially when the PCT result is affected. As discussed in the statement of considerations to the September 16, 1988, final rule (53 FR 35996), the Commission needs to be cognizant of such changes to be able to confirm licensee or vendor assessments of the significance of the changes and to ensure that approved models continue to be used.

10 CFR 50.46 (a)(ii) contains an unambiguous requirement that changes to the ECCS evaluation must be reported at least annually: ''For each change to or error discovered in an acceptable evaluation model or in the application of such a model that affects the temperature calculation, the applicant or licensee shall report the nature of the change or error and its estimated effect on the limiting ECCS analysis to the Commission at least annually as specified in § 50.4.'' Therefore, on the basis of the definition of an evaluation model in § 50.46, the Commission does not accept the distinction made by NEI between ''model parameters'' and ''design parameters.'' Based on the requirements of § 50.46, changes to the ECCS evaluation model under the amended Appendix K rule which affect the temperature calculation must be reported at least annually.

The comments from one licensee, the New York Power Authority (NYPA), considered two areas not already discussed:

1. *Other potential benefits.* NYPA commented that licensees could seek benefits other than increasing licensed power under the amended rule. The commenter offered two examples of such benefits—revised containment analyses conducted at power levels below 102 percent power and relaxation of operating restrictions on ultimate heat sink temperatures.

The Commission agrees that licensees could request the relaxation offered by the amended rule while not pursuing a power level increase. In the Background section the Commission recognized that other benefits are available to licensees and that power level increase is just one option. The examples offered by the NYPA comments may be suitable to a licensee, depending on plant characteristics and plant-specific safety analyses.

2. *Changes to technical specifications.* NYPA interpreted statements in the proposed rule to suggest that licensees pursuing the relaxation offered in the amendment would need to change their plant technical specifications to include a limiting condition for operation for new feedwater flow instrumentation. Further, the comments suggested that clarification was needed to address when license amendments were required for changes associated with the rule.

In the Section-by-Section Analysis, the Commission discusses technical specification modifications that might be necessary when a power measurement uncertainty reduction is used in safety analyses. Typically, when an ECCS methodology is changed, a revision is made to the technical specification list of references associated with plant safety analysis methods. Technical specifications for nuclear power plants do not contain explicit requirements for feedwater flow instrumentation. The Commission does not believe that technical specification requirements for feedwater flow instruments are necessary for licensees to use the relaxation offered by the amended rule. Clarification regarding this point has been added to the Section-by-Section Analysis.

Section-by-Section Analysis

Appendix K to Part 50—ECCS Evaluation Models (I)(A)—Sources of Heat During the LOCA

This section is amended by removing words from the first sentence in the section to specifically associate the power level requirement with instrumentation error, and by adding a sentence immediately following the first sentence in the section. The new sentence indicates that licensees may assume a power level lower than 102 percent, but not less than 100 percent, if the proposed lower alternative value can be shown to account for core thermal power measurement instrumentation uncertainty. Licensee proposals may involve use of advanced flow measurement systems or other approaches to determine the level of power measurement uncertainty and to support reduction of the power level assumption. Only the uncertainty associated with power level measurement is considered in this amendment.

Appendix K, part II (1)(a) requires that the values of analysis parameters or their basis be sufficiently documented to allow NRC review. The requirement applies to all analysis input parameters, including those related to other plant instrumentation, such as temperature and pressure. Changes to other inputs are documented in the same manner as the power measurement uncertainty would be documented under the final rule. NRC review and approval is not needed to change a parameter in an approved ECCS evaluation model unless the change is associated with technical specification or license condition modfications, or a final safety analysis report change not covered by § 50.59, ''Changes, tests and experiments.'' Estimated changes in ECCS performance due to revised analysis inputs are reported under § 50.46 (a)(3), at least annually. As discussed in the Statement of Considerations for a final rule amending Appendix K (53 FR 36001; September 16, 1988), the annual reports keep NRC apprised of changes. This should ensure that the NRC staff can evaluate a licensee's assessment of the significance of changes and maintain cognizance of modifications made to NRC-approved evaluation models. The licensee must include revised parameters and other changes in the ECCS evaluation model as required by § 50.46 (a)(3) when a single change or an accumulation of changes is expected to affect peak cladding temperature by 50°F or more. The basis for the revised analysis parameter (i.e., the assumed power level) should be included in documentation of the evaluation model, as required by Appendix K, Part II (1)(a).

Licensees could take advantage of the amended rule without a change to technical specifications or to the plant license by simply updating the ECCS analysis and following the reporting requirements of § 50.46. However, in most cases the NRC expects that the analysis supporting the power measurement uncertainty, as well as the description of the relevant instrumentation and associated plant-specific parameters involved in the uncertainty analysis, would be submitted for NRC review and approval before being used. These requests are expected because most licensees have adopted Generic Letter 88–16, ''Removal of Cycle-Specific Parameter Limits from Technical Specifications.'' The generic letter provided guidance for licensees to transfer cycle-specific parameters from their technical specifications to a Core Operating Limits Report (COLR). Licensees following the generic letter guidance added an administrative requirement to their technical specifications that specifically identifies NRC-reviewed and approved methods used to determine core operating limits (*e.g.,* topical reports). Because a number of core operating limits are based on LOCA analysis results, ECCS evaluation methods are included in the technical specification list. Therefore, most licensees opting to use the relaxation in the final rule will need to amend technical specifications to include a reference to an NRC-approved topical report that includes the uncertainty

analysis justifying reduced power measurement uncertainty. However, a technical specification requirement specifically related to feedwater flow measurement system operability is not needed.

An additional technical specification consideration for licensees pursuing changes based on the final rule could involve nuclear instrument (NI) requirements. Existing plant technical specifications include surveillance requirements to calibrate the power range NIs based on the calorimetric measuring reactor thermal power. The NIs provide the indication of reactor power used as an input for safety systems. Licensees obtaining the relaxation offered in the final rule are expected to change some operating parameter of the plant, whether it be power level, required ECCS flow, etc. By incorporating the justification of reduced uncertainty in power measurement in the basis for their ECCS analysis, licensees would be placing a condition on an input to the calorimetric. The NI calibration required by the plant licensee would then be based on a calorimetric assuming the reduced power measurement uncertainty. If, for some reason, during the course of plant operation the reduced uncertainty did not apply (*e.g.,* the new feedwater flow meter was no longer operating), the calorimetric would no longer be a valid source of calibration for the NIs. Licensees would need to take action to maintain compliance with their technical specification, for example, by using an alternate input to the calorimetric. The power measurement uncertainties associated with the alternate input would then apply and the plant would need to adjust its operating condition (possibly lower its operating power level) to satisfy the final rule and to maintain the validity of applicable safety analyses. A change to technical specifications for NIs is not required in this situation.

Referenced Documents

Copies of GL–88–16, and CLI–73–39, and ''Supplemental Testimony of the AEC Regulatory Staff on the Interim Acceptance Criteria for Emergency Core Cooling Systems for Light-Water Cooled Power Reactors,'' and ''Redirect and Rebuttal Testimony of Dr. Donald H. Roy on Behalf of Babcock & Wilcox,'' and ''Concluding Statement of Position of the Regulatory Staff—Public Rulemaking Hearing on: Acceptance Criteria for Emergency Core Cooling Systems for Light-Water Cooled Nuclear Power Reactors,'' and NRC safety evaluations are available for inspection and copying for a fee at the NRC Public Document Room, 2120 L Street, NW. (Lower Level), Washington, DC. GL–88–16 is also available via the Internet at http://www.nrc.gov/NRC/GENACT/GC/index.html#GL.

NUREG–1230 is available from the Superintendent of Documents, U.S. Government Printing Office, Post Office Box 37082, Washington, DC 20013–7082 or from the National Technical Information Service, Springfield, VA 22161.

Voluntary Consensus Standards

The National Technology Transfer Act of 1995, Pub. L. 104–113, requires that Federal agencies use technical standards that are developed or adopted by voluntary consensus standards bodies unless the use of such a standard is inconsistent with applicable law or otherwise impractical. In this final rule, the NRC provides holders of operating licenses for nuclear power plants the option of reducing the assumed reactor power level used in ECCS evaluations. This action constitutes a modification to an existing government-unique standard, 10 CFR part 50, Appendix K issued by the NRC on January 4, 1974. The NRC is not aware of any voluntary consensus standard that could be adopted instead of the government-unique standard. The NRC considered using a voluntary consensus standard. However, an appropriate standard was not identified.

Finding of No Significant Environmental Impact: Availability

The NRC has determined under the National Environmental Policy Act of 1969, as amended, and the NRC's regulations in subpart A of 10 CFR part 51, that this regulation is not a major Federal action significantly affecting the quality of the human environment and, therefore, an environmental impact statement is not required.

The action is likely to result in relatively small changes to ECCS analyses or to the licensed power of nuclear reactor facilities. The NRC staff expects that no significant environmental impact will result from the final rule, because licensee actions based on the rule should not significantly increase the probability or consequences of accidents; no changes will be made in the types of any effluents that may be released off site; and there should be no significant increase in occupational or public radiation exposure. Therefore, there are no significant radiological environmental impacts associated with the action. The action does not involve non-radiological plant effluents and has no other environmental impact. Therefore, there are no significant non-radiological environmental impacts associated with the final rule.

The determination of the environmental assessment is that there will be no significant offsite impact on the public from this action. Also, the NRC has committed itself to complying in all its actions with Executive Order (E.O.) 12898, ''Federal Actions To Address Environmental Justice in Minority Populations and Low-Income Populations,'' dated February 11, 1994. The NRC has determined that there are no disproportionately high and adverse impacts on minority and low-income populations. The NRC uses the following working definition of environmental justice: Environmental justice means the fair treatment and meaningful involvement of all people, regardless of race, ethnicity, culture, income, or educational level with respect to the development, implementation and enforcement of environmental laws, regulations, and policies. In the letter and spirit of E.O. 12898, the NRC requested public comments on environmental justice considerations or other questions related to this rule, but none were received.

Paperwork Reduction Act Statement

This final rule increases the burden on licensees opting to use a reduced power level assumption for ECCS analysis (i.e., below 102 percent) to include the change in their annual report required under 10 CFR 50.46 (a)(3)(ii). The public burden to modify the annual report is estimated to average one-half hour per response. The estimated public burden for record keeping, analysis, and other effort associated with this information collection will be included in the Office of Management and Budget FY2000 Information Collection Budget. Existing requirements were approved by the Office of Management and Budget, approval number 3150–0011.

Public Protection Notification

If a means used to impose an information collection does not display a currently valid OMB control number, the NRC may not conduct or sponsor, and a person is not required to respond to, the information collection.

Regulatory Analysis

The Commission has prepared a regulatory analysis on this regulation. Copies of the regulatory analysis may be obtained as indicated in the **ADDRESSES** section.

Regulatory Flexibility Certification

As required by the Regulatory Flexibility Act of 1980, 5 U.S.C. 605(b), the Commission certifies that this final rule does not have a significant economic impact on a substantial number of small entities. This final rule would affect only the licensing and operation of nuclear power plants. The companies that own these plants do not fall within the definition of ''small entities'' found in the Regulatory Flexibility Act or within the size standards established by the NRC in 10 CFR 2.810.

Backfit Analysis

The NRC has determined that the backfit rule in 10 CFR 50.109 does not apply to this final rule and that a backfit analysis is not required for this amendment because the change does not involve any provisions that impose backfits as defined in 10 CFR 50.109(a)(1). The final rule establishes an alternative approach for ECCS performance evaluations that may be voluntarily adopted by licensees. Licensees may continue to comply with existing requirements in Appendix K. The final rule does not impose a new requirement on current licensees and therefore, does not constitute a backfit as defined in 10 CFR 50.109(a)(1).

Small Business Regulatory Enforcement Fairness Act

In accordance with the Small Business Regulatory Enforcement Fairness Act of 1996, the NRC has determined that this action is a major rule and has verified this determination with the Office of Information and Regulatory Affairs of OMB.

List of Subjects in 10 CFR Part 50

Antitrust, Classified information, Criminal penalties, Fire protection, Intergovernmental relations, Nuclear power plants and reactors, Radiation protection, Reactor siting criteria, Reporting and recordkeeping requirements.

For the reasons set out in the preamble and under the authority of the Atomic Energy Act of 1954, as amended; the Energy Reorganization Act of 1974, as amended; and 5 U.S.C. 552 and 553, the NRC is adopting the following amendments to 10 CFR part 50.

PART 50—DOMESTIC LICENSING OF PRODUCTION AND UTILIZATION FACILITIES

1. The authority citation for part 50 continues to read as follows:

Authority: Sections 102, 103, 104, 105, 161, 182, 183, 186, 189, 68 Stat. 936, 937, 938, 948, 953, 954, 955, 956, as amended, sec. 234, 83 Stat. 444, as amended (42 U.S.C. 2132, 2133, 2134, 2135, 2201, 2232, 2233, 2236, 2239, 2282); secs. 201, as amended, 202, 206, 88 Stat. 1242, as amended, 1244, 1246 (42 U.S.C. 5841, 5842, 5846).

Section 50.7 also issued under Pub. L. 95–601, sec. 10, 92 Stat. 2951 (42 U.S.C. 5851). Section 50.10 also issued under secs. 101, 185, 68 Stat. 955, as amended (42 U.S.C. 2131, 2235), sec. 102, Pub. L. 91–190, 83 Stat. 853 (42 U.S.C. 4332). Sections 50.13, 50.54(dd), and 50.103 also issued under sec. 108, 68 Stat. 939, as amended (42 U.S.C. 2138). Sections 50.23, 50.35, 50.55, and 50.56 also issued under sec. 185, 68 Stat. 955 (42 U.S.C. 2235). Sections 50.33a, 50.55a, and Appendix Q also issued under sec. 102, Pub. L. 91–190, 83 Stat. 853 (42 U.S.C. 4332). Sections 50.34 and 50.54 also issued under sec. 204, 88 Stat. 1245 (42 U.S.C. 5844). Sections 50.58, 50.91, and 50.92 also issued under Pub. L. 97–415, 96 Stat. 2073 (42 U.S.C. 2239). Section 50.78 also issued under sec. 122, 68 Stat. 939 (42 U.S.C. 2152). Sections 50.80–50.81 also issued under sec. 184, 68 Stat. 954, as amended (42 U.S.C. 2234). Appendix F also issued under sec. 187, 68 Stat. 955 (42 U.S.C. 2237).

2. Appendix K to part 50 is amended by revising the introductory paragraph of I. A., ''Sources of heat during the LOCA,'' to read as follows:

Appendix K to Part 50—ECCS Evaluation Models

I. Required and Acceptable Features of the Evaluation Models

A. *Sources of heat during the LOCA.* For the heat sources listed in paragraphs I.A.1 to 4 of this appendix it must be assumed that the reactor has been operating continuously at a power level at least 1.02 times the licensed power level (to allow for instrumentation error), with the maximum peaking factor allowed by the technical specifications. An assumed power level lower than the level specified in this paragraph (but not less than the licensed power level) may be used provided the proposed alternative value has been demonstrated to account for uncertainties due to power level instrumentation error. A range of power distribution shapes and peaking factors representing power distributions that may occur over the core lifetime must be studied. The selected combination of power distribution shape and peaking factor should be the one that results in the most severe calculated consequences for the spectrum of postulated breaks and single failures that are analyzed.

* * * * *

Dated at Rockville, Maryland, this 26th day of May 2000.

For the Nuclear Regulatory Commission.

J. Samuel Walker,

Acting Secretary of the Commission.

[FR Doc. 00–13745 Filed 5–31–00; 8:45 am]

BILLING CODE 7590–01–P

NATIONAL CREDIT UNION ADMINISTRATION

12 CFR Part 745

Share Insurance and Appendix

AGENCY: National Credit Union Administration (NCUA).

ACTION: Final rule.

SUMMARY: The NCUA is issuing a final rule amending its share insurance rules. The amendments simplify and clarify these rules and provide parity between them and the Federal Deposit Insurance Corporation's (FDIC) deposit insurance rules. Specifically, the amendments: increase available share insurance coverage on some revocable trust accounts; simplify the method for determining the insurance coverage a member has in one or more joint accounts; treat a revocable trust account held in connection with a living trust as any other revocable trust accounts, if the living trust meets all requirements pertaining to revocable trusts; provide separate insurance coverage for qualifying joint revocable trust accounts; treat Roth IRAs as traditional IRAs and Education IRAs as irrevocable trusts for insurance purposes; liberalize insurance coverage for some kinds of public unit accounts; clarify the degree of control state or local law has on share insurance determinations and revise the substance and format of the Appendix to part 745.

DATES: This rule is effective July 3, 2000.

ADDRESSES: National Credit Union Administration, 1775 Duke Street, Alexandria, VA 22314–3428.

FOR FURTHER INFORMATION CONTACT: Frank S. Kressman, Staff Attorney, Division of Operations, Office of General Counsel, at the above address, or telephone: (703) 518–6540.

SUPPLEMENTARY INFORMATION:

A. Background

In accordance with NCUA's regulatory review process, at year end 1998, NCUA staff identified part 745 as one of its regulations in need of updating, clarification and simplification. On April 15, 1999, the NCUA Board issued an interim final rule adopting changes to its share insurance rules regarding joint accounts and revocable trust accounts. 64 FR 19685 (April 22, 1999). The FDIC adopted similar changes to its deposit insurance rules on March 23, 1999. 64 FR 15653 (April 1, 1999). When issuing the interim rule, NCUA was aware that additional changes to part 745 were necessary and would be forthcoming,

but believed it was important to implement the interim rule at that time to maintain parity between NCUA's and FDIC's insurance programs. Subsequently, NCUA conducted a more comprehensive review of part 745. NCUA issued a proposed rule on November 18, 1999 that suggested additional amendments as discussed below. 64 FR 66812 (November 30, 1999).

The interim and proposed rules solicited comments from the public. Those comments have been given careful consideration and are reflected in the final amendments to the interim and proposed rules discussed below.

1. Interim Rule

The interim rule amended the share insurance rules pertaining to revocable trust accounts and joint accounts. Revocable trust accounts are accounts that evidence an intention on the part of the owner to pass funds onto one or more beneficiaries upon the owner's death. They include payable-on-death accounts, and tentative or ''Totten'' trust accounts. Prior to the interim rule, these accounts were insured separately from other accounts of the owner only if the beneficiary was the owner's spouse, child or grandchild. If there were multiple beneficiaries, and each beneficiary was either a spouse, child or grandchild of the owner, then the account would have been insured up to $100,000 for each beneficiary. For example, if an account was held by a husband ''in trust for'' his wife and three children, then the account would have been insured for up to $400,000. That coverage was separate from any insurance the husband, wife or children may have had on their own accounts. For these accounts, insurance was provided on a per beneficiary basis for the spouse, child or grandchild. If, however, prior to the interim rule, a credit union member named a parent or sibling as a beneficiary, a common practice particularly for single individuals, then the account would have been added to the individual account of the owner and insured up to $100,000. There was no separate coverage for those beneficiaries even though there was a close familial relationship.

The interim rule added parents and siblings to the list of family members who qualify as beneficiaries for separate coverage. The interim rule also clarified that the degree of kinship for named beneficiaries includes relationships through blood, adoption or by virtue of remarriage.

Prior to the interim rule, NCUA's joint account regulation did not expressly refer to a two-step process in determining insurance coverage for those accounts, as did the FDIC's rule. Insurance coverage was determined, however, by applying two regulatory subsections where an individual had several joint accounts, some with different joint owners. First, under § 745.8(d), joint accounts with the same combination of owners were added together and insured up to $100,000. Even though there was more than one account, if the owners were the same, the accounts were treated as one. Then, under § 745.8(e), a person's interest in all joint accounts he or she owned with different combinations of owners was added together and insured up to $100,000. Thus, NCUA followed the same type of two-step process used by the FDIC.

The application of this process resulted in certain inequities. If a person had ownership interests in several different joint accounts, each with a different combination of joint owners, his or her interest in each of those accounts would have been added together and insured to $100,000. The same would have been done for each of the other joint owners as well. If instead, that person had had one or more joint accounts with the same combination of joint owners, the maximum insurance available to all of those joint owners combined would have been limited to $100,000. Thus, in one instance, each joint owner's interest could have been insured up to $100,000, while in the other, total coverage on the account was limited to $100,000, notwithstanding the amount of each of the joint owner's interest.

The interim rule simplified coverage on joint accounts. It is no longer necessary to add together all joint accounts owned by the same combination of individuals. Under the interim rule, each person's interest in all qualifying joint accounts will be added together and insured to a maximum of $100,000. The interim rule also eliminated the signature requirement for share certificates and accounts maintained by certain fiduciaries for joint owners as long as the credit union's records reflect that there are joint owners.

2. Proposed Rule

The proposed rule suggested amendments to the share insurance rules regarding living trusts, joint revocable trusts, IRA accounts, public unit accounts, guardian accounts, the application of local law to share insurance determinations and the substance and format of the Appendix to part 745.

A living trust is a formal trust that an owner creates and retains control over during his or her lifetime. NCUA proposed to treat a revocable trust account that is held in connection with a living trust in the same manner it treats all other revocable trust accounts, if the living trust otherwise meets all requirements pertaining to revocable trust accounts. Living trusts that include conditions that could prevent a beneficiary from acquiring a vested and non-contingent interest in the account funds upon the owner's death, however, would not qualify for this coverage.

Joint revocable trust accounts are revocable trust accounts, as described in § 745.4 of NCUA's regulations, established by more than one owner and held for the benefit of others. NCUA proposed to provide separate insurance coverage for qualifying accounts of this kind.

NCUA also proposed to clarify the degree of control that state or local law has on share insurance determinations to maintain uniform national rules and consistent insurance determinations. When the proposed rule was issued, § 745.2(a) provided that, to the extent local law enters into a share insurance determination, the law of the jurisdiction in which the insured credit union's principal office is located will govern. The proposal indicated that this meant the law of the jurisdiction in which the insured credit union's principal office is located will control over the law of other jurisdictions where the insured credit union may have branch offices or service facilities. It further clarified that this provision in no way effects the supremacy of federal law.

NCUA proposed to include Roth IRAs and Education IRAs among member accounts eligible for share insurance. Federal tax laws first made these accounts available to consumers on January 1, 1998. The proposal also stated that although both are colloquially known as IRA accounts, only Roth IRAs would be treated as traditional IRAs, for share insurance purposes, under § 745.9–2 of NCUA's regulations. Education IRAs would be treated as irrevocable trust accounts, for share insurance purposes, under § 745.9–1 of NCUA's regulations.

NCUA proposed to liberalize its share insurance coverage for some kinds of public unit accounts. At the time the proposal was issued, public funds were generally separately insured up to $100,000 if invested by an official custodian of funds of: (1) The United States; (2) any state of the United States or any county, municipality, or political subdivision thereof; (3) the District of

Columbia; (4) specified territories or possessions of the United States; and (5) tribal funds of any Indian tribe. NCUA proposed to distinguish share draft accounts from share certificate and regular share accounts in this context. The result would be to provide separate insurance coverage up to $100,000 for share draft accounts, and up to an additional $100,000 for share certificate and regular share accounts combined. This more liberal coverage would only be available where an official custodian establishes public unit accounts in an authorized, federally-insured credit union that is located within the jurisdiction from which the custodian's authority is derived. Accounts established outside of that jurisdiction would be limited to the current $100,000 limit without regard to whether the funds are held in share draft accounts or share certificate and regular share accounts.

Funds held in the name of a guardian, custodian or conservator for the benefit of a ward or minor are insured up to $100,000 in the aggregate, separately from any other accounts of the guardian, custodian, conservator, ward or minor. FDIC, however, treats these accounts as agency or nominee accounts and does not provide separate insurance coverage. Rather, FDIC adds the guardian account together with the individual accounts of the beneficiary of the guardian account and insures that aggregate up to $100,000. NCUA proposed to treat these accounts in a manner consistent with FDIC's treatment. This would have resulted in a reduction in insurance coverage.

The Appendix to part 745 provides examples that illustrate the application of share insurance coverage. The Appendix is not expected to answer every share insurance question that could conceivably be asked. Rather, its function is to address and clarify the most common insurance coverage issues in a simple and manageable format. NCUA proposed to enhance the usefulness of the Appendix by incorporating additional information and examples and putting it into an easy to read question-and-answer format.

B. Summary of Comments

1. Interim Rule

NCUA received twelve comment letters regarding the interim rule. Four from credit union trade associations, three from federal credit unions, two from banking trade associations, one from a state chartered credit union, one from an association of state credit union supervisors and one from a law firm. All of the commenters generally supported the interim rule. The commenters also raised other points.

Eight commenters offered their opinions whether examples illustrating insurance coverage should be moved to the body of the regulations or kept in their present location in the Appendix to the regulations. There was an even split of opinion among the commenters. The examples will remain in the Appendix where they are easily accessible and cannot be confused as part of the regulatory language.

Three commenters expressed concern over NCUA's use of the term ''revocable trust account.'' They noted that there are many different terms used to describe this kind of account and that this might cause confusion among some credit unions. NCUA believes the language used in § 745.4 of NCUA's rules will minimize any confusion in this context. Additionally, ''revocable trust account'' is the term used in the FDIC's deposit insurance rules and its use in NCUA's rules should avoid confusion for the public when comparing coverage.

Several general comments pertaining to livings trusts and joint revocable trusts were also received in connection with the interim rule. Those comments have been considered in conjunction with the comments to the proposed rule as discussed below.

2. Proposed Rule

NCUA received seventeen comment letters regarding the proposed rule. Eight from credit union trade associations, seven from federal credit unions, one from an association of state credit union supervisors and one from a banking trade association. All of the commenters generally supported the proposed rule. The commenters also raised other points.

Three commenters expressed concern over the proposal to exclude from revocable trust insurance coverage any living trust that includes conditions that could prevent a beneficiary from acquiring a vested and non-contingent interest in the account funds upon the owner's death. Specifically, they noted that credit unions might have difficulty determining whether a living trust contains such a defeating contingency. NCUA does not intend for credit unions to make this kind of determination. The burden is on the member to create a living trust that qualifies for insurance coverage. Credit unions may choose to advise members to have their living trusts reviewed by private counsel for legal and regulatory sufficiency prior to account opening.

Two commenters asked NCUA to clarify how a one-owner living trust account or other revocable trust account would be insured if there were qualifying and non-qualifying beneficiaries. Assuming the living trust is treated as any other revocable trust account and eligible for coverage, shares in the account attributable to the qualifying beneficiaries would be insured up to $100,000 for each qualifying beneficiary. Shares in the account attributable to the non-qualifying beneficiaries would be added to any individual accounts of the owner and insured up to $100,000.

Two commenters questioned whether the Education IRA should be insured as an irrevocable trust because, under some circumstances, the beneficiary of an Education IRA could be changed to a member of the designated beneficiary's family. The structure and exclusive purpose of Education IRAs, and the restrictions imposed on them by the Internal Revenue Service, demonstrate that these trusts are irrevocable in nature. We do not believe a limited ability to change beneficiaries diminishes the irrevocable nature of these trusts or warrants treating them as anything other than irrevocable. The FDIC also insures Education IRAs as irrevocable trusts.

Nine commenters strongly opposed the proposal to eliminate separate insurance coverage for guardian accounts. They contended that separate insurance for guardian accounts poses no threat to the National Credit Union Share Insurance Fund and that eliminating separate coverage would create more confusion and problems for credit union members than achieve good. They also noted that, while parity between NCUA's and FDIC's insurance is generally desirable, the two programs need not be identical especially to the detriment of credit union members. We find these arguments persuasive. Accordingly, NCUA has determined not to take action to eliminate the existing separate coverage for custodial accounts at this time.

C. Regulatory Procedures

Regulatory Flexibility Act

The Regulatory Flexibility Act requires NCUA to prepare an analysis to describe any significant economic impact any final regulation may have on a substantial number of small entities. For purposes of this analysis, credit unions under $1 million in assets will be considered small entities. As of June 30, 1999, there were 1,690 such entities with a total of $807.3 million in assets, with an average asset size of $0.5 million. These small entities make up 15.6 percent of all credit unions, but

only 0.2 percent of all credit union assets.

The NCUA Board has determined and certifies that this final rule will not have a significant economic impact on a substantial number of small entities. The reason for this determination is that the final rule clarifies and simplifies the share insurance regulations. It does not impose any additional costs or significant regulatory requirements on small entities. Accordingly, the NCUA has determined that a Regulatory Flexibility Analysis is not required.

Paperwork Reduction Act

NCUA has determined that the final amendments do not increase paperwork requirements under the Paperwork Reduction Act of 1995 and regulations of the Office of Management and Budget.

Executive Order 13132

Executive Order 13132 encourages independent regulatory agencies to consider the impact of their regulatory actions on state and local interests. In adherence to fundamental federalism principles, NCUA, an independent regulatory agency as defined in 44 U.S.C. 3502(5), voluntarily complies with the executive order. This rule will apply to all federally-insured credit unions, but it will not have substantial direct effect on the states, on the relationship between the national government and the states, or on the distribution of power and responsibilities among the various levels of government. NCUA has determined that this rule does not constitute a policy that has federalism implications for purposes of the executive order.

Assessment of Federal Regulations and Policies on Families

NCUA has determined that this rule will not affect family well-being within the meaning of Section 654 of the Treasury and General Government Appropriations Act, 1999, Pub. L. 105–277, 112 Stat. 2681 (1998).

Small Business Regulatory Enforcement Fairness Act

The Small Business Regulatory Enforcement Fairness Act of 1996 (Pub. L. 104–121) provides generally for congressional review of agency rules. A reporting requirement is triggered in instances where NCUA issues a final rule as defined by Section 551 of the Administrative Procedure Act. 5 U.S.C. 551. The Office of Management and Budget has determined that this rule is not a major rule for purposes of the Small Business Regulatory Enforcement Fairness Act of 1996.

List of Subjects

12 CFR Part 745

Credit unions, Pension plans, Share insurance, Trustee.

By the National Credit Union Administration Board, this 24th day of May 2000.

Becky Baker,

Secretary of the Board.

For the reasons stated above, the interim final rule amending 12 CFR part 745 that was published at 64 FR 19685 on April 22, 1999 is adopted as a final rule without change. NCUA also amends 12 CFR part 745 as follows:

PART 745—SHARE INSURANCE AND APPENDIX

1. The authority citation for part 745 continues to read as follows:

Authority: 12 U.S.C. 1752(5), 1757, 1765, 1766, 1781, 1782, 1787, 1789.

2. Section 745.2(a) is amended by revising the last sentence to read as follows:

§ 745.2 General principles applicable in determining insurance of accounts.

(a) * * * While the provisions of this part govern in determining share insurance coverage, to the extent local law enters into a share insurance determination, the local law of the jurisdiction in which the insured credit union's principal office is located will control over the local law of other jurisdictions where the insured credit union has offices or service facilities.

* * * * *

3. Section 745.4 is amended by adding paragraphs (e) and (f) to read as follows:

§ 745.4 Revocable trust accounts.

* * * * *

(e) *Living trusts.* Insurance treatment under this section also applies to revocable trust accounts held in connection with a so-called ''living trust,'' meaning a formal trust that an owner creates and retains control over during his or her lifetime. If a named beneficiary in a living trust is a qualifying beneficiary under this section, then the share account held in connection with the living trust may be eligible for share insurance under this section, assuming compliance with all the provisions of this part. If the living trust includes a defeating contingency that relates to a beneficiary's interest in the trust assets, then insurance coverage under this section will not be provided. For purposes of this section, a defeating contingency is defined as a condition that would prevent the beneficiary from acquiring a vested and non-contingent interest in the funds in the share account upon the owner's death.

(f) *Joint revocable trust accounts.* Where an account described in paragraph (a) of this section is established by more than one owner and held for the benefit of others, some or all of whom are within the qualifying degree of kinship, the respective interests of each owner held for the benefit of each qualifying beneficiary will be separately insured up to $100,000. The interest of each co-owner will be deemed equal unless otherwise stated in the share account records of the federally-insured credit union. Interests held for non-qualifying beneficiaries will be added to the individual accounts of the owners. Where a husband and a wife establish a revocable trust account naming themselves as the sole beneficiaries, the account will not be insured according to the provisions of this section, but will instead be insured in accordance with the joint account provisions of § 745.8.

4. Section 745.9–1 is amended by adding paragraph (c) to read as follows:

§ 745.9–1 Trust accounts.

* * * * *

(c) This section applies to trust interests created in Education IRAs established in connection with section 530 of the Internal Revenue Code (26 U.S.C. 530).

5. Section 745.9–2(a) is revised to read as follows:

§ 745.9–2 IRA/Keogh accounts.

(a) The present vested ascertainable interest of a participant or designated beneficiary in a trust or custodial account maintained pursuant to a pension or profit-sharing plan described under section 401(d) (Keogh account), section 408(a) (IRA) and section 408A (Roth IRA) of the Internal Revenue Code (26 U.S.C. 401(d), 408(a) and 408A) will be insured up to $100,000 separately from other accounts of the participant or designated beneficiary. For insurance purposes, IRA and Roth IRA accounts will be combined together and insured in the aggregate up to $100,000. A Keogh account will be separately insured from an IRA account, Roth IRA account or, where applicable, aggregated IRA and Roth IRA accounts.

* * * * *

6. Section 745.10 is amended by revising paragraphs (a)(1) through (a)(5) and (b) and adding a second sentence to paragraph (c) to read as follows:

§ 745.10 Public unit accounts.

(a) * * *

(1) Each official custodian of funds of the United States lawfully investing the same in a federally-insured credit union will be separately insured in the amount of:

(i) Up to $100,000 in the aggregate for all share draft accounts; and

(ii) Up to $100,000 in the aggregate for all share certificate and regular share accounts;

(2) Each official custodian of funds of any state of the United States or any county, municipality, or political subdivision thereof lawfully investing the same in a federally-insured credit union in the same state will be separately insured in the amount of:

(i) Up to $100,000 in the aggregate for all share draft accounts; and

(ii) Up to $100,000 in the aggregate for all share certificate and regular share accounts;

(3) Each official custodian of funds of the District of Columbia lawfully investing the same in a federally-insured credit union in the District of Columbia will be separately insured in the amount of:

(i) Up to $100,000 in the aggregate for all share draft accounts; and

(ii) Up to $100,000 in the aggregate for all share certificate and regular share accounts;

(4) Each official custodian of funds of the Commonwealth of Puerto Rico, the Panama Canal Zone, or any territory or possession of the United States, or any county, municipality, or political subdivision thereof lawfully investing the same in a federally-insured credit union in Puerto Rico, the Panama Canal Zone, or any such territory or possession, respectively, will be separately insured in the amount of:

(i) Up to $100,000 in the aggregate for all share draft accounts; and

(ii) Up to $100,000 in the aggregate for all share certificate and regular share accounts;

(5) Each official custodian of tribal funds of any Indian tribe (as defined in section 3(c) of the Indian Financing Act of 1974) or agency thereof lawfully investing the same in a federally-insured credit union will be separately insured in the amount of:

(i) Up to $100,000 in the aggregate for all share draft accounts; and

(ii) Up to $100,000 in the aggregate for all share certificate and regular share accounts;

(b) Each official custodian referred to in paragraphs (a)(2), (3), and (4) of this section lawfully investing such funds in share accounts in a federally-insured credit union outside of their respective jurisdictions shall be separately insured up to $100,000 in the aggregate for all such accounts regardless of whether they are share draft, share certificate or regular share accounts.

(c) * * * Where an officer, agent or employee of a public unit has custody of certain funds which by law or under a bond indenture are required to be set aside to discharge a debt owed to the holders of notes or bonds issued by the public unit, any investment of such funds in an account in a federally-insured credit union will be deemed to be a share account established by a trustee of trust funds of which the noteholders or bondholders are pro rata beneficiaries, and the beneficial interest of each noteholder or bondholder in the share account will be separately insured up to $100,000.

* * * * *

7. The appendix to part 745 is amended by:

A. Adding a heading to the introductory text;

B. Revising the heading of Part A;

C. Revising the heading of Part B and adding Example 4;

D. Revising the heading of Part C;

E. Revising the heading of Part D;

F. Revising the heading of Part E, the first introductory paragraph and Examples 4 through 7, and adding new Example 9;

G. Revising the heading of Part F; and

H. Revising the heading of Part G and the second sentence of the seventh introductory paragraph.

The additions and revisions read as follows:

Appendix to Part 745—Examples of Insurance Coverage Afforded Accounts in Credit Unions Insured by the National Credit Union Share Insurance Fund

What Is the Purpose of This Appendix?

* * * * *

A. How Are Single Ownership Accounts Insured?

* * * * *

B. How Are Revocable Trust Accounts Insured?

* * * * *

Example 4

Question: Member H invests $200,000 in a revocable trust account held in connection with a living trust with his son, S, and his daughter, D, as named beneficiaries. What is the insurance coverage?

Answer: Since S and D are children of H, the owner of the account, the funds would normally be insured under the rules governing revocable trust accounts up to $100,000 as to each beneficiary (§ 745.4(b)). However, because this account is held in connection with a living trust whose named beneficiaries are qualifying beneficiaries under § 745.4, it must be scrutinized to determine whether the account complies with all other provisions of this part and whether the living trust contains any defeating contingencies. Assuming there are no defeating contingencies and that the account complies with all other requirements of this part, then it will be treated as any other revocable trust. In this instance, it will be insured up to $100,000 as to each beneficiary (§ 745.4(e)). Assuming that S and D have equal beneficial interests ($100,000 each), H is fully insured for this account.

C. How Are Accounts Held by Executors or Administrators Insured?

* * * * *

D. How Are Accounts Held by a Corporation, Partnership or Unincorporated Association Insured?

* * * * *

E. How Are Public Unit Accounts Insured?

For insurance purposes, the official custodian of funds belonging to a public unit, rather than the public unit itself, is insured as the account holder. All funds belonging to a public unit and invested by the same custodian in a federally-insured credit union are categorized as either share draft accounts or share certificate and regular share accounts. If these accounts are invested in a federally-insured credit union located in the jurisdiction from which the official custodian derives his authority, then the share draft accounts will be insured separately from the share certificate and regular share accounts. Under this circumstance, all share draft accounts are added together and insured to the $100,000 maximum and all share certificate and regular share accounts are also added together and separately insured up to the $100,000 maximum. If, however, these accounts are invested in a federally-insured credit union located outside of the jurisdiction from which the official custodian derives his authority, then insurance coverage is limited to $100,000 for all accounts regardless of whether they are share draft, share certificate or regular share accounts. If there is more than one official custodian for the same public unit, the funds invested by each custodian are separately insured. If the same person is custodian of funds for more than one public unit, he is separately insured with respect to the funds of each unit held by him in properly designated accounts.

* * * * *

Example 4

Question: A city treasurer invests city funds in each of the following accounts: ''General Operating Account,'' ''School Transportation Fund,'' ''Local Maintenance Fund,'' and ''Payroll Fund.'' Each account is available to the custodian upon demand. By administrative direction, the city treasurer has allocated the funds for the use of and control by separate departments of the city. What is the insurance coverage?

Answer: All of the accounts are added together and insured in the aggregate to $100,000. Because the allocation of the city's

funds is not by statute or ordinance for the specific use of and control by separate departments of the city, separate insurance coverage to the maximum of $100,000 is not afforded to each account (§§ 745.1(d) and 745.10(a)(2)).

Example 5

Question: A, the custodian of retirement funds of a military exchange, invests $1,000,000 in an account in an insured credit union. The military exchange, a non-appropriated fund instrumentally of the United States, is deemed to be a public unit. The employees of the exchange are the beneficiaries of the retirement funds but are not members of the credit union. What is the insurance coverage?

Answer: Because A invested the funds on behalf of a public unit, in his capacity as custodian, those funds qualify for $100,000 share insurance even though A and the public unit are not within the credit union's field of membership. Since the beneficiaries are neither public units nor members of the credit union they are not entitled to separate share insurance. Therefore, $900,000 is uninsured (§ 745.10(a)(1)).

Example 6

Question: A is the custodian of the County's employee retirement funds. He deposits $1,000,000 in retirement funds in an account in an insured credit union. The ''beneficiaries'' of the retirement fund are not themselves public units nor are they within the credit union's field of membership. What is the insurance coverage?

Answer: Because A invested the funds on behalf of a public unit, in his capacity as custodian, those funds qualify for $100,000 share insurance even though A and the public unit are not within the credit union's field of membership. Since the beneficiaries are neither public units nor members of the credit union they are not entitled to separate share insurance. Therefore, $900,000 is uninsured (§ 745.10(a)(2)).

Example 7

Question: A county treasurer establishes the following share draft accounts in an insured credit union each with $100,000:

''General Operating Fund''
''County Roads Department Fund''
''County Water District Fund''
''County Public Improvement District Fund''
''County Emergency Fund''

What is the insurance coverage?

Answer: The ''County Roads Department,'' ''County Water District'' and ''County Public Improvement District'' accounts would each be separately insured to $100,000 if the funds in each such account have been allocated by law for the exclusive use of a separate county department or subdivision expressly authorized by State statute. Funds in the ''General Operating'' and ''Emergency Fund'' accounts would be added together and insured in the aggregate to $100,000, if such funds are for countywide use and not for the exclusive use of any subdivision or principal department of the county, expressly authorized by State statute (§§ 745.1(d) and 745.10(a)(2)).

* * * * *

Example 9

Question: A, an official custodian of funds of a state of the United States, lawfully invests $250,000 of state funds in a federally-insured credit union located in the state from which he derives his authority as an official custodian. What is the insurance coverage?

Answer: If A invested the entire $250,000 in a share draft account, then $100,000 would be insured and $150,000 would be uninsured. If A invested $125,000 in share draft accounts and another $125,000 in share certificate and regular share accounts, then A would be insured for $100,000 for the share draft accounts and $100,000 for the share certificate and regular share accounts leaving $50,000 uninsured (§ 745.10(a)(2)). If A had invested the $250,000 in a federally-insured credit union located outside the state from which he derives his authority as an official custodian, then $100,000 would be insured for all accounts regardless of whether they were share draft, share certificate or regular share accounts, leaving $150,000 uninsured (§ 745.10(b)).

F. How Are Joint Accounts Insured?

* * * * *

G. How Are Trust Accounts and Retirement Accounts Insured?

* * * * *

* * * Although credit unions may serve as trustees or custodians for self-directed IRA, Roth IRA and Keogh accounts, once the funds in those accounts are taken out of the credit union, they are no longer insured.

* * * * *

[FR Doc. 00–13510 Filed 5–31–00; 8:45 am]

BILLING CODE 7535–01–P

DEPARTMENT OF TRANSPORTATION

Federal Aviation Administration

14 CFR Part 39

[Docket No. 2000–NM–109–AD; Amendment 39–11751; AD 2000–11–03]

RIN 2120–AA64

Airworthiness Directives; Dassault Model Falcon 2000, Mystere-Falcon 900, Falcon 900EX, Fan Jet Falcon, Mystere-Falcon 50, Mystere-Falcon 20, and Mystere-Falcon 200 Series Airplanes

AGENCY: Federal Aviation Administration, DOT.

ACTION: Final rule; request for comments.

SUMMARY: This amendment adopts a new airworthiness directive (AD) that is applicable to all Dassault Model Falcon 2000, Mystere-Falcon 900, Falcon 900EX, Fan Jet Falcon, Mystere-Falcon 50, Mystere-Falcon 20, and Mystere-Falcon 200 series airplanes. This action requires revising the Airplane Flight Manual to include speed limitations in the event of failure indications of the pitch feel system. These limitations are intended to mitigate severe pitch oscillations of the airplane.

DATES: Effective June 16, 2000.

The incorporation by reference of certain publications listed in the regulations is approved by the Director of the **Federal Register** as of June 16, 2000.

Comments for inclusion in the Rules Docket must be received on or before July 3, 2000.

ADDRESSES: Submit comments in triplicate to the Federal Aviation Administration (FAA), Transport Airplane Directorate, ANM–114, Attention: Rules Docket No. 2000–NM–109–AD, 1601 Lind Avenue, SW., Renton, Washington 98055–4056. Comments may be inspected at this location between 9 a.m. and 3 p.m., Monday through Friday, except Federal holidays. Comments may also be sent via the Internet using the following address: 9-anm-iarcomment@faa.gov. Comments sent via the Internet must contain ''Docket No. 2000–NM–109–AD'' in the subject line and need not be submitted in triplicate.

The service information referenced in this AD may be obtained from Dassault Falcon Jet, P.O. Box 2000, South Hackensack, New Jersey 07606. This information may be examined at the FAA, Transport Airplane Directorate, 1601 Lind Avenue, SW., Renton, Washington; or at the Office of the Federal Register, 800 North Capitol Street, NW., suite 700, Washington, DC.

FOR FURTHER INFORMATION CONTACT: Norman B. Martenson, Manager, International Branch, ANM–116, FAA, Transport Airplane Directorate, 1601 Lind Avenue, SW., Renton, Washington 98055–4056; telephone (425) 227–2110; fax (425) 227–1149.

SUPPLEMENTARY INFORMATION: The Direction Generale de l'Aviation Civile (DGAC), which is the airworthiness authority for France, recently notified the FAA that an unsafe condition may exist on all Dassault Model Mystere-Falcon 900, Falcon 900EX, Fan Jet Falcon, Mystere-Falcon 50, Mystere-Falcon 20, and Mystere-Falcon 200 series airplanes. The DGAC advises that two Mystere-Falcon 900 series airplanes have experienced severe pitch oscillations during descent.

The exact cause of the pitch oscillation is unknown at this time, and is still under investigation. However, in one case, it was considered that failure of the pitch feel system may have contributed to the severity of the pitch oscillations. Since this system is similar

in design to that of Dassault Model Falcon 2000, Falcon 900EX, Fan Jet Falcon, Mystere-Falcon 50, Mystere-Falcon 20, and Mystere-Falcon 200 series airplanes, these airplanes may be subject to the same unsafe condition revealed on the Mystere-Falcon 900 series airplanes.

Explanation of Relevant Service Information

Dassault Aviation has issued the following Airplane Flight Manual (AFM) Temporary Revisions and Temporary Changes:

- Temporary Revision 19, DTM589/590/591/592, Temporary Revision 19 DTM592, and Temporary Revision 11, DTM918, each dated October 27, 1999 (for Model Fan Jet Falcon series airplanes.)
- Temporary Change 20, DTM30528, dated October 27, 1999 (for Model Mystere-Falcon 20 series airplanes.)
- Temporary Change 29, DTM308A, dated October 27, 1999 (for Model Mystere-Falcon 200 series airplanes.)
- Temporary Change 50, DTM813, dated October 27, 1999 (for Model Mystere-Falcon 50 series airplanes.)
- Temporary Change 49, FM813EX, dated October 27, 1999 (for Model Mystere-Falcon 50EX series airplanes.)
- Temporary Change 80, DTM20103, and Temporary Change 4, FM900C, each dated October 27, 1999 (for Model Mystere-Falcon 900 series airplanes.)
- Temporary Change 46, DTM561, dated October 27, 1999 (for Model Falcon 900EX.)

Procedures described in the Temporary Revisions and Temporary Changes provide instructions to reduce the airspeed to 260 knots indicated airspeed or 0.76 mach indicated if the pitch feel system light (*i.e.*, PITCH, AQ PITCH, AQ ROLL, PITCH FEEL, or Q UNIT) is illuminated. The DGAC classified these temporary revisions and temporary changes as mandatory and issued French airworthiness directives 1999–464–029(B), dated November 17, 1999, as revised by Erratum, dated December 15, 1999 (for Model Mystere-Falcon 50, Mystere-Falcon 900, and Falcon 900EX series airplanes); and 1999–467–026(B), dated November 17, 1999, as revised by Erratum, dated December 15, 1999 (for Model Fan Jet Falcon, Mystere-Falcon 20, and Mystere-Falcon 200 series airplanes); in order to assure the continued airworthiness of these airplanes in France.

FAA's Conclusions

These airplane models are manufactured in France and are type certificated for operation in the United States under the provisions of section 21.29 of the Federal Aviation Regulations (14 CFR 21.29) and the applicable bilateral airworthiness agreement. Pursuant to this bilateral airworthiness agreement, the DGAC has kept the FAA informed of the situation described above. The FAA has examined the findings of the DGAC, reviewed all available information, and determined that AD action is necessary for products of this type design that are certificated for operation in the United States.

Interim Action

This is considered to be interim action until final action is identified, at which time the FAA may consider further rulemaking.

Explanation of Requirements of Rule

Since an unsafe condition has been identified that is likely to exist or develop on other airplanes of the same type design registered in the United States, this AD is being issued to provide the flight crew with speed limitations in the event of failure indications of the pitch feel system. These limitations are intended to mitigate severe pitch oscillations of the airplane. The actions are required to be accomplished in accordance with the AFM Temporary Revisions and Temporary Changes described previously, except as discussed below.

Explanation of Applicability

Operators should note that the applicability of this AD includes all Model Falcon 2000 series airplanes, whereas this airplane model is not included in the previously identified French airworthiness directives. Since Model Falcon 2000 series airplanes are similar in design to those airplanes identified in the French airworthiness directives, the FAA has determined that Model Falcon 2000 series airplanes may be subject to the same unsafe condition and, therefore, must be included in the applicability of this AD.

Determination of Rule's Effective Date

Since a situation exists that requires the immediate adoption of this regulation, it is found that notice and opportunity for prior public comment hereon are impracticable, and that good cause exists for making this amendment effective in less than 30 days.

Comments Invited

Although this action is in the form of a final rule that involves requirements affecting flight safety and, thus, was not preceded by notice and an opportunity for public comment, comments are invited on this rule. Interested persons are invited to comment on this rule by submitting such written data, views, or arguments as they may desire. Communications shall identify the Rules Docket number and be submitted in triplicate to the address specified under the caption **ADDRESSES.** All communications received on or before the closing date for comments will be considered, and this rule may be amended in light of the comments received. Factual information that supports the commenter's ideas and suggestions is extremely helpful in evaluating the effectiveness of the AD action and determining whether additional rulemaking action would be needed.

Submit comments using the following format:

- Organize comments issue-by-issue. For example, discuss a request to change the compliance time and a request to change the service bulletin reference as two separate issues.
- For each issue, state what specific change to the AD is being requested.
- Include justification (*e.g.,* reasons or data) for each request.

Comments are specifically invited on the overall regulatory, economic, environmental, and energy aspects of the rule that might suggest a need to modify the rule. All comments submitted will be available, both before and after the closing date for comments, in the Rules Docket for examination by interested persons. A report that summarizes each FAA-public contact concerned with the substance of this AD will be filed in the Rules Docket.

Commenters wishing the FAA to acknowledge receipt of their comments submitted in response to this rule must submit a self-addressed, stamped postcard on which the following statement is made: ''Comments to Docket Number 2000–NM–109–AD.'' The postcard will be date stamped and returned to the commenter.

Regulatory Impact

The regulations adopted herein will not have a substantial direct effect on the States, on the relationship between the national Government and the States, or on the distribution of power and responsibilities among the various levels of government. Therefore, it is determined that this final rule does not have federalism implications under Executive Order 13132.

The FAA has determined that this regulation is an emergency regulation that must be issued immediately to correct an unsafe condition in aircraft, and that it is not a ''significant regulatory action'' under Executive

Order 12866. It has been determined further that this action involves an emergency regulation under DOT Regulatory Policies and Procedures (44 FR 11034, February 26, 1979). If it is determined that this emergency regulation otherwise would be significant under DOT Regulatory Policies and Procedures, a final regulatory evaluation will be prepared and placed in the Rules Docket. A copy of it, if filed, may be obtained from the Rules Docket at the location provided under the caption **ADDRESSES.**

List of Subjects in 14 CFR Part 39

Air transportation, Aircraft, Aviation safety, Incorporation by reference, Safety.

Adoption of the Amendment

Accordingly, pursuant to the authority delegated to me by the Administrator, the Federal Aviation Administration amends part 39 of the Federal Aviation Regulations (14 CFR part 39) as follows:

PART 39—AIRWORTHINESS DIRECTIVES

1. The authority citation for part 39 continues to read as follows:

Authority: 49 U.S.C. 106(g), 40113, 44701.

§ 39.13 [Amended]

2. Section 39.13 is amended by adding the following new airworthiness directive:

2000–11–03 Dassault Aviation: Amendment 39–11751. Docket 2000–NM–109–AD.

Applicability: All Model Falcon 2000, Mystere-Falcon 900, Falcon 900EX, Fan Jet Falcon, Mystere-Falcon 50, Mystere-Falcon 20, and Mystere-Falcon 200 series airplanes; certificated in any category.

Compliance: Required as indicated, unless accomplished previously.

To provide the flight crew with speed limitations, which are intended to mitigate severe pitch ocillations in the event of failure indications of the pitch feel system, accomplish the following:

Airplane Flight Manual (AFM) Revision

(a) Within 7 days after the effective date of this AD, revise the Limitations Section and Abnormal Procedures Section of the FAA-approved AFM, in accordance with paragraph (a)(1), (a)(2), (a)(3), (a)(4), (a)(5), (a)(6), (a)(7), or (a)(8), as applicable, of this AD.

(1) For Model Fan Jet Falcon series airplanes: Insert Dassault Aviation Temporary Revision 19, DTM589/590/591/592, Temporary Revision 19, DTM592, and Dassault Aviation Temporary Revision 11, DTM918, each dated October 27, 1999, into the AFM.

(2) For Model Mystere-Falcon 20 series airplanes: Insert Dassault Aviation Temporary Change 20, DTM30528, dated October 27, 1999, into the AFM.

(3) For Model Mystere-Falcon 200 series airplanes: Insert Dassault Aviation Temporary Change 29, DTM308A, dated October 27, 1999, into the AFM.

(4) For Model Mystere-Falcon 50 series airplanes: Insert Dassault Aviation Temporary Change 50, DTM813, dated October 27, 1999, into the AFM.

(5) For Model Mystere-Falcon 50EX series airplanes: Insert Dassault Aviation Temporary Change 49, FM813EX, dated October 27, 1999, into the AFM.

(6) For Model Mystere-Falcon 900 series airplanes: Insert Dassault Aviation Temporary Change 80, DTM20103, and Temporary Change 4, FM900C, each dated October 27, 1999, into the AFM.

(7) For Model Falcon 900EX series airplanes: Insert Dassault Aviation Temporary Change 46, DTM561, dated October 27, 1999, into the AFM.

(8) For Model Falcon 2000 series airplanes: Insert the following statement into the AFM. This may also be accomplished by inserting a copy of this AD into the AFM.

"If the PITCH FEEL warning light is on, reduce the airspeed to 260 KIAS or MI 0.76 max."

Note 1: When the Temporary Changes and Temporary Revisions specified in paragraph (a) of this AD have been incorporated into the general revisions of the AFM, the general revisions may be inserted into the AFM, provided that the information contained in the general revisions is identical to that specified in the Temporary Changes and Temporary Revisions.

Alternative Methods of Compliance

(b) An alternative method of compliance or adjustment of the compliance time that provides an acceptable level of safety may be used if approved by the Manager, International Branch, ANM–116, FAA, Transport Airplane Directorate. Operators shall submit their requests through an appropriate FAA Principal Operations Inspector, who may add comments and then send it to the Manager, International Branch, ANM–116.

Note 2: Information concerning the existence of approved alternative methods of compliance with this AD, if any, may be obtained from the International Branch,

Special Flight Permits

(c) Special flight permits may be issued in accordance with sections 21.197 and 21.199 of the Federal Aviation Regulations (14 CFR 21.197 and 21.199) to operate the airplane to a location where the requirements of this AD can be accomplished.

Incorporation by Reference

(d) Except as provided by paragraph (a)(8) of this AD, the Airplane Flight Manual revisions shall be done in accordance with Dassault Aviation Temporary Revision 19, DTM589/590/591/592, dated October 27, 1999; Dassault Aviation Temporary Revision 19, DTM592, dated October 27, 1999; Dassault Aviation Temporary Revision 11, DTM918, dated October 27, 1999; Dassault Aviation Temporary Change 20, DTM30528, dated October 27, 1999; Dassault Aviation Temporary Change 29, DTM308A, dated October 27, 1999; Dassault Aviation Temporary Change 50, DTM813, dated October 27, 1999; Dassault Aviation Temporary Change 49, FM813EX, dated October 27, 1999; Dassault Aviation Temporary Change 80, DTM20103, dated October 27, 1999; Dassault Aviation Temporary Change 4, FM900C, dated October 27, 1999; and Dassault Aviation Temporary Change 46, DTM561, dated October 27, 1999; as applicable. This incorporation by reference was approved by the Director of the Federal Register in accordance with 5 U.S.C. 552(a) and 1 CFR part 51. Copies may be obtained from Dassault Falcon Jet, P.O. Box 2000, South Hackensack, New Jersey 07606. Copies may be inspected at the FAA, Transport Airplane Directorate, 1601 Lind Avenue, SW., Renton, Washington; or at the Office of the Federal Register, 800 North Capitol Street, NW., suite 700, Washington, DC.

Note 3: The subject of this AD is addressed in French airworthiness directives 1999–464–029(B), dated November 17, 1999, as revised by Erratum, dated December 15, 1999; and 1999–467–026(B), dated November 17, 1999, as revised by Erratum, dated December 15, 1999.

(e) This amendment becomes effective on June 16, 2000.

Issued in Renton, Washington, on May 22, 2000.

Donald L. Riggin,

Acting Manager, Transport Airplane Directorate, Aircraft Certification Service.

[FR Doc. 00–13330 Filed 5–31–00; 8:45 am]

BILLING CODE 4910–13–P

DEPARTMENT OF TRANSPORTATION

Federal Aviation Administration

14 CFR Part 39

[Docket No. 98–NM–316–AD; Amendment 39–11754; AD 2000–11–06]

RIN 2120–AA64

Airworthiness Directives; Boeing Model 767 Series Airplanes

AGENCY: Federal Aviation Administration, DOT.

ACTION: Final rule.

SUMMARY: This amendment adopts a new airworthiness directive (AD), applicable to all Boeing Model 767 series airplanes. This AD requires repetitive inspections to detect discrepancies of the wiring and surrounding Teflon sleeves of the fuel tank boost pumps and override/jettison pumps; replacement of the sleeves with new sleeves, for certain airplanes; and repair or replacement of the wiring and sleeves with new parts, as necessary.

This amendment is prompted by reports of chafing of Teflon sleeves that surround and protect electrical wires inside conduits installed in the fuel tanks. The actions specified by this AD are intended to ensure adequate protection to the fuel pump wire insulation. Such chafing of the wire insulation could eventually result in exposure of electrical conductor, permit arcing from the wire to the conduit, and create a potential for a fuel tank fire or explosion.

DATES: Effective July 6, 2000.

The incorporation by reference of certain publications listed in the regulations is approved by the Director of the Federal Register as of July 6, 2000.

ADDRESSES: The service information referenced in this AD may be obtained from Boeing Commercial Airplane Group, P.O. Box 3707, Seattle, Washington 98124–2207. This information may be examined at the Federal Aviation Administration (FAA), Transport Airplane Directorate, Rules Docket, 1601 Lind Avenue, SW., Renton, Washington; or at the Office of the Federal Register, 800 North Capitol Street, NW., suite 700, Washington, DC.

FOR FURTHER INFORMATION CONTACT: Holly Thorson, Aerospace Engineer, Propulsion Branch, ANM–140S, FAA, Transport Airplane Directorate, Seattle Aircraft Certification Office, 1601 Lind Avenue, SW., Renton, Washington 98055–4056; telephone (425) 227–1357; fax (425) 227–1181.

SUPPLEMENTARY INFORMATION: A proposal to amend part 39 of the Federal Aviation Regulations (14 CFR part 39) to include an airworthiness directive (AD) that is applicable to all Boeing Model 767 series airplanes was published in the **Federal Register** on November 15, 1999 (64 FR 61798). That action proposed to require repetitive inspections to detect discrepancies of the wiring and surrounding Teflon sleeves of the fuel tank boost pumps and override/jettison pumps; replacement of the sleeves with new sleeves, for certain airplanes; and repair or replacement of the wiring and sleeves with new parts, as necessary.

Comments

Interested persons have been afforded an opportunity to participate in the making of this amendment. Due consideration has been given to the comments received.

Support for the Proposal

Two commenters support the proposed rule.

Credit for Inspections Accomplished Previously

One commenter requests that the FAA revise the proposed rule to clarify that airplanes inspected prior to the effective date of this AD in accordance with Boeing Service Bulletin 767–28A0053, Revision 1, dated April 1, 1999, do not have to be inspected again until 60,000 flight hours or 30,000 flight cycles after the last inspection, whichever occurs first. The commenter states that there is no mechanism in the notice of proposed rulemaking (NPRM) to provide credit for inspections accomplished previously.

The FAA concurs with the intent of the commenter's request. Airplanes that have been inspected prior to the effective date of this AD in accordance with the referenced service bulletin should be inspected next according to the repetitive interval (60,000 flight hours or 30,000 flight cycles after the most recent inspection, whichever occurs first) specified in this AD. However, credit for applicable actions accomplished prior to the effective date of an AD is always provided by means of the statement in the body of the AD, ''Compliance: Required as indicated, unless accomplished previously.'' Therefore, no change to the final rule is necessary in this regard.

Revise Reporting Requirement

One commenter requests that the FAA revise paragraph (e) of the proposed rule to eliminate the requirement to include, in any report of positive inspection findings, ''a statement indicating whether any wire has ever been removed and inspected during maintenance, along with the date (if known) of any such inspection.'' The commenter states that it would be ''virtually impossible'' to meet this requirement, and only a review of maintenance records would show if a wire was inspected. Further, the commenter states that, because operators are only required to retain maintenance records for one year, a review of maintenance records would only show whether such an inspection was completed within the past year.

The FAA concurs with the commenter's request to revise the reporting requirement of this AD. As the commenter states, a review of maintenance records would be the most effective method for determining if wiring of the fuel tank boost pumps had previously been removed and inspected. The FAA also acknowledges that an operator may not have maintenance records extending back for more than one year for its airplanes. Therefore, the subject statement in paragraph (e) of this AD has been revised to specify that the report of positive inspection findings should include, ''a statement indicating, *if known*, whether any wire has ever been removed and inspected during maintenance, along with the date (if known) of any such inspection.'' However, the FAA expects that any available maintenance records will be thoroughly reviewed to determine if boost pump wiring has been removed and inspected previously.

Correct Typographical Error

One commenter requests that the proposed rule be revised to correct a typographical error. The commenter points out that ''NOTE 1'' of the NPRM refers to paragraph (e), but should refer to paragraph (f). The FAA concurs with the commenter's request, and ''NOTE 1'' of this final rule has been revised accordingly.

Consider Actions Accomplished in Accordance With AD 98–10–10

One commenter requests that the proposed rule be revised to exclude Model 767 series airplanes on which wiring and Teflon sleeving were replaced in accordance with the requirements of AD 98–10–10, amendment 39–10522 (63 FR 26063, July 13, 1998), provided that lacing ties were not installed on the outside of the sleeving (except at sleeve ends). The commenter points out that AD 98–10–10 requires a one-time visual inspection to confirm installation of Teflon sleeves over the electrical wires to the fuel tank boost pumps installed inside conduits in the main and center wing tanks of certain Boeing Model 767 series airplanes. The commenter states that it accomplished the inspection required by that AD on its entire fleet of Model 767 series airplanes and installed new wiring and Teflon sleeving through the conduits to the boost pumps in all locations. The commenter notes that it detected no damage during examination of the removed wiring.

The FAA partially concurs with the commenter's request. The FAA concurs with the commenter's summary of the requirements of AD 98–10–10 with respect to Model 767 series airplanes. However, this AD requires actions that differ from those required by AD 98–10–10. While AD 98–10–10 confirms the installation of the Teflon sleeves and requires additional inspections to detect chafing of wiring on airplanes on which Teflon sleeves are found to be missing, this AD requires inspection of the Teflon sleeves over the fuel pump wires to detect and correct damage or installation discrepancies. Therefore, the FAA finds that it would be

inappropriate to reference AD 98–10–10 in establishing compliance with this AD. However, as provided in paragraph (f) of this AD, the commenter may request approval of actions accomplished in accordance with the requirements of AD 98–10–10 as an alternative method of compliance for the actions required by this AD. No change to the final rule is necessary in this regard.

Extend Inspection Compliance Time for Certain Airplanes

One commenter requests that the FAA revise the proposed rule to extend the initial compliance threshold for the inspection of Model 767 series airplanes having line numbers 721 and subsequent. The commenter states that the intent of Boeing Service Bulletin 767–28A0053, Revision 1 (which was referenced in the proposed rule as the appropriate source of service information for the proposed actions), has been incorporated during production on airplanes having line numbers 721 and subsequent, and any discrepancies (e.g., splices, cuts, splits, holes, worn areas, and lacing ties installed on the outside) of the Teflon sleeves surrounding the wiring of the fuel boost pumps and override/jettison pumps have been corrected.

The FAA concurs with the intent of the commenter's request. However, the manufacturer has been unable to verify that all of the actions recommended in Boeing Service Bulletin 767–28A0053, Revision 1, were accomplished during production on Model 767 series airplanes having line numbers 721 and higher. The FAA finds that it would be inappropriate to delay the issuance of this AD for identification of the line numbers on which the intent of the service bulletin was accomplished during production. However, as provided in paragraph (f) of this AD, once the correct line numbers have been identified, the commenter may request approval of actions accomplished during production as an alternative method of compliance for the actions required by this AD. No change to the final rule is necessary in this regard.

Revise Discussion Section Language

One commenter, the manufacturer, requests that the proposed rule be revised to remove the word ''significant'' from the following sentence in the ''Discussion'' section of the NPRM: ''The inspections revealed significant chafing through the Teflon sleeves that enclose wire bundles inside the conduits located in the fuel tanks.'' The commenter states that it has reviewed inspection results received from operators of Boeing Model 767 series airplanes, and the results show that no chafing through both layers of the Teflon sleeves or of the wiring inside the Teflon sleeves has been found.

The FAA does not concur with the commenter's request to not refer to the degree of chafing as ''significant.'' As stated previously, the FAA has issued AD 98–10–10, which requires a one-time visual inspection to confirm installation of Teflon sleeves over the electrical wires to the boost pumps installed inside conduits in the main and center wing tanks of certain Boeing Model 767 series airplanes. A review of the data from inspections accomplished in accordance with that AD revealed three instances of chafing through both layers of Teflon sleeves. Therefore, the FAA does consider chafing through the Teflon sleeves to be significant. However, the section of the proposal to which the commenter refers is not restated in this final rule; thus, no change to the final rule is necessary in this regard.

Credit for Inspections Accomplished Using Validation Service Bulletin

One commenter requests that the FAA revise paragraph (a) of the proposed rule to specify a compliance time of 36 months after the effective date of this AD for airplanes inspected previously in accordance with Boeing Service Bulletin 767–28A0053 ''Preliminary.'' The commenter states that the FAA should not require airplanes on which the proposed actions were accomplished in accordance with the preliminary service bulletin to be inspected again within 18 months after the effective date of this AD. The commenter asserts that Teflon sleeves inspected previously will not be worn within 18 months.

The FAA concludes that the ''preliminary'' service bulletin to which the commenter refers is the validation copy of Boeing Alert Service Bulletin 767–28A0053, dated May 21, 1998. The FAA does not concur with the commenter's request to provide credit for inspections accomplished in accordance with the validation copy of the service bulletin. The FAA finds that the validation copy did not provide instructions for inspecting or replacing the Teflon sleeves. Also, because the validation copy of the service bulletin was effective for only a small number of airplanes, the FAA finds that it would be inappropriate to complicate this AD by including specific instructions for airplanes inspected in accordance with that issue of the service bulletin. However, as provided in paragraph (f) of this AD, the commenter may request approval of inspections accomplished in accordance with the validation copy of the service bulletin as an alternative method of compliance with this AD. No change to the final rule is necessary in this regard.

Exempt Airplanes With Deactivated Center Fuel Tank

One commenter requests that the FAA revise the proposed rule to state that airplanes on which the center fuel tank is deactivated are not subject to the inspections specified in the proposed AD. The commenter states that it operates several Boeing Model 767 series airplanes on which the center fuel tank has been deactivated in accordance with certain Boeing service bulletins. The commenter states that the airplanes are configured with the override/jettison pumps' motor winding circuits opened at the P36 and P37 panels, and, with no power available to these wires, the possibility of arcing is eliminated. The commenter also requests that, if the FAA does not revise the proposed rule to exempt airplanes with the center fuel tank deactivated, paragraph (d) of the proposed rule be revised to state that, if the center fuel tank is deactivated, the test of the override fuel pumps must be accomplished prior to reactivation of the center fuel tank (rather than prior to further flight).

The FAA does not concur with the commenter's request to revise this AD to accommodate airplanes on which the center fuel tank is deactivated. The FAA acknowledges that it may not be necessary for operators to perform initial or repetitive inspections of the override/jettison fuel pump wiring on airplanes with deactivated center fuel tanks. However, as stated in NOTE 1 of the proposed rule (as well as the final rule), for airplanes that have been modified, altered, or repaired so that the performance of the requirements of the proposed rule is affected, the operator must request approval for an alternative method of compliance in accordance with paragraph (f) of this AD. No change to the final rule is necessary in this regard.

Explanation of Change in Service Bulletin Reference

In the NPRM, the FAA referred to Boeing Service Bulletin 767–28A0053, Revision 1, as an ''alert'' service bulletin. However, while the original issue of the service bulletin was considered an ''alert'' service bulletin, Revision 1 is not. Therefore, this final rule has been revised to remove the word ''alert'' from the service bulletin references throughout the AD.

Conclusion

After careful review of the available data, including the comments noted above, the FAA has determined that air safety and the public interest require the adoption of the rule with the changes described previously. The FAA has determined that these changes will neither increase the economic burden on any operator nor increase the scope of the AD.

Cost Impact

There are approximately 716 airplanes of the affected design in the worldwide fleet. The FAA estimates that 253 airplanes of U.S. registry will be affected by this AD. It will take approximately 5 work hours per airplane (for airplanes with jettison pumps) or 3 work hours per airplane (for airplanes without jettison pumps) to accomplish the required inspection/replacement, at an average labor rate of $60 per work hour. Parts, if required, will cost $336 for the sleeve replacement required by this AD. Based on these figures, the cost impact of this AD on U.S. operators is estimated to be $636 or $516 per airplane, if required to accomplish the replacement action; and $300 or $180 per airplane, per inspection cycle.

The cost impact figures discussed above are based on assumptions that no operator has yet accomplished any of the requirements of this AD action, and that no operator would accomplish those actions in the future if this AD were not adopted.

Regulatory Impact

The regulations adopted herein will not have a substantial direct effect on the States, on the relationship between the national Government and the States, or on the distribution of power and responsibilities among the various levels of government. Therefore, it is determined that this final rule does not have federalism implications under Executive Order 13132.

For the reasons discussed above, I certify that this action (1) is not a ''significant regulatory action'' under Executive Order 12866; (2) is not a ''significant rule'' under DOT Regulatory Policies and Procedures (44 FR 11034, February 26, 1979); and (3) will not have a significant economic impact, positive or negative, on a substantial number of small entities under the criteria of the Regulatory Flexibility Act. A final evaluation has been prepared for this action and it is contained in the Rules Docket. A copy of it may be obtained from the Rules Docket at the location provided under the caption **ADDRESSES.**

List of Subjects in 14 CFR Part 39

Air transportation, Aircraft, Aviation safety, Incorporation by reference, Safety.

Adoption of the Amendment

Accordingly, pursuant to the authority delegated to me by the Administrator, the Federal Aviation Administration amends part 39 of the Federal Aviation Regulations (14 CFR part 39) as follows:

PART 39—AIRWORTHINESS DIRECTIVES

1. The authority citation for part 39 continues to read as follows:

Authority: 49 U.S.C. 106(g), 40113, 44701.

§ 39.13 [Amended]

2. Section 39.13 is amended by adding the following new airworthiness directive:

2000–11–06 Boeing: Amendment 39–11754. Docket 98–NM–316–AD.

Applicability: All Model 767 series airplanes, certificated in any category.

Note 1: This AD applies to each airplane identified in the preceding applicability provision, regardless of whether it has been modified, altered, or repaired in the area subject to the requirements of this AD. For airplanes that have been modified, altered, or repaired so that the performance of the requirements of this AD is affected, the owner/operator must request approval for an alternative method of compliance in accordance with paragraph (f) of this AD. The request should include an assessment of the effect of the modification, alteration, or repair on the unsafe condition addressed by this AD; and, if the unsafe condition has not been eliminated, the request should include specific proposed actions to address it.

Compliance: Required as indicated, unless accomplished previously.

To prevent exposure of electrical conductor, which could permit arcing from the wire to the conduit and create a potential for a fuel tank fire or explosion, accomplish the following:

Inspections

(a) Perform a detailed visual inspection to detect discrepancies—including the presence of splices, cuts, splits, holes, worn areas, and lacing ties installed on the outside of the sleeves (except at the sleeve ends)—of the Teflon sleeves surrounding the wiring of the fuel tank boost pumps and override/jettison pumps, at the earlier of the times specified in paragraphs (a)(1) and (a)(2) of this AD, in accordance with Boeing Service Bulletin 767–28A0053, Revision 1, dated April 1, 1999. Repeat the inspection thereafter at intervals not to exceed 60,000 flight hours or 30,000 flight cycles, whichever occurs first.

(1) Prior to the accumulation of 50,000 total flight hours, or within 90 days after the effective date of this AD, whichever occurs later.

(2) Within 18 months after the effective date of this AD.

Note 2: For the purposes of this AD, a detailed visual inspection is defined as: ''An intensive visual examination of a specific structural area, system, installation, or assembly to detect damage, failure, or irregularity. Available lighting is normally supplemented with a direct source of good lighting at intensity deemed appropriate by the inspector. Inspection aids such as mirror, magnifying lenses, etc. may be used. Surface cleaning and elaborate access procedures may be required.''

Corrective Actions

(b) If any discrepancy is detected during any inspection required by paragraph (a) of this AD: Prior to further flight, remove the Teflon sleeves and perform a detailed visual inspection to detect damage of the wiring, in accordance with paragraph D. of the Accomplishment Instructions of Boeing Service Bulletin 767–28A0053, Revision 1, dated April 1, 1999.

(1) If no damage to the wiring is detected, prior to further flight, install new Teflon sleeves in accordance with the service bulletin.

(2) If any damage to the wiring is detected, prior to further flight, accomplish the requirements of paragraph (c) of this AD.

(c) If any damage to the wiring is detected during any inspection required by paragraph (b) of this AD: Prior to further flight, perform a detailed visual inspection to determine if the wiring damage was caused by arcing, in accordance with paragraph D. of the Accomplishment Instructions of Boeing Service Bulletin 767–28A0053, Revision 1, dated April 1, 1999.

(1) If the wire damage was not caused by arcing: Prior to further flight, repair any damaged wires or replace the wires with new or serviceable wires, as applicable, and install new Teflon sleeves; in accordance with the service bulletin.

(2) If any damage caused by arcing is found: Prior to further flight, perform an inspection for signs of fuel inside the conduit or on the wires, in accordance with the service bulletin.

(i) If no sign of fuel is found, accomplish the actions specified by paragraphs (c)(2)(i)(A), (c)(2)(i)(B), (c)(2)(i)(C), and (c)(2)(i)(D) of this AD.

(A) Prior to further flight, repair the wires or replace the wires with new or serviceable wires, as applicable, in accordance with the service bulletin.

(B) Prior to further flight, install new Teflon sleeves, in accordance with the service bulletin.

(C) Repeat the inspection for signs of fuel inside the conduit thereafter at intervals not to exceed 500 flight hours, until the requirements of paragraph (c)(2)(i)(D) of this AD have been accomplished. If any fuel is found inside the conduit during any inspection required by this paragraph, prior to further flight, replace the conduit with a new or serviceable conduit in accordance with the service bulletin. Thereafter, repeat the inspection specified in paragraph (a) of

this AD at intervals not to exceed 60,000 flight hours or 30,000 flight cycles, whichever occurs first.

(D) Within 6,000 flight hours or 18 months after the initial fuel inspection specified by paragraph (c)(2) of this AD, whichever occurs first, replace the conduit with a new or serviceable conduit, in accordance with the service bulletin. Such conduit replacement constitutes terminating action for the repetitive fuel inspections required by paragraph (c)(2)(i)(C) of this AD.

(ii) If any fuel is found in the conduit or on any wire: Prior to further flight, replace the conduit with a new or serviceable conduit, replace damaged wires with new or serviceable wires, and install new Teflon sleeves; in accordance with the service bulletin. Thereafter, repeat the inspection specified in paragraph (a) of this AD at intervals not to exceed 60,000 flight hours or 30,000 flight cycles, whichever occurs first.

Pump Retest

(d) For any wire bundle removed and reinstalled during any inspection required by this AD: Prior to further flight after such reinstallation, retest the fuel pump in accordance with paragraph G., H., I., or J., as applicable, of the Accomplishment Instructions, of Boeing Service Bulletin 767–28A0053, Revision 1, dated April 1, 1999.

Reporting Requirement

(e) Submit a report of positive inspection findings (findings of discrepancies only), along with any damaged wiring and sleeves, to the Seattle Manufacturing Inspection District Office (MIDO), 2500 East Valley Road, Suite C–2, Renton, Washington 98055–4056; fax (425) 227–1159; at the applicable time specified in paragraph (e)(1) or (e)(2) of this AD. The report must include the airplane serial number; the number of total flight hours and flight cycles on the airplane; the location of the electrical cable on the airplane; and a statement indicating, if known, whether any wire has ever been removed and inspected during maintenance, along with the date (if known) of any such inspection. Information collection requirements contained in this regulation have been approved by the Office of Management and Budget (OMB) under the provisions of the Paperwork Reduction Act of 1980 (44 U.S.C. 3501 *et seq.*) and have been assigned OMB Control Number 2120–0056.

(1) For airplanes on which the initial inspection required by paragraph (a) of this AD is accomplished after the effective date of this AD: Submit the report within 10 days after performing the initial inspection.

(2) For airplanes on which the initial inspection required by paragraph (a) of this AD has been accomplished prior to the effective date of this AD: Submit the report for the initial inspection within 10 days after the effective date of this AD.

Alternative Methods of Compliance

(f) An alternative method of compliance or adjustment of the compliance time that provides an acceptable level of safety may be used if approved by the Manager, Seattle Aircraft Certification Office (ACO), FAA, Transport Airplane Directorate. Operators shall submit their requests through an appropriate FAA Principal Maintenance Inspector, who may add comments and then send it to the Manager, Seattle ACO.

Note 3: Information concerning the existence of approved alternative methods of compliance with this AD, if any, may be obtained from the Seattle ACO.

Special Flight Permits

(g) Special flight permits may be issued in accordance with sections 21.197 and 21.199 of the Federal Aviation Regulations (14 CFR 21.197 and 21.199) to operate the airplane to a location where the requirements of this AD can be accomplished.

Incorporation by Reference

(h) The actions shall be done in accordance with Boeing Service Bulletin 767–28A0053, Revision 1, dated April 1, 1999. This incorporation by reference was approved by the Director of the Federal Register in accordance with 5 U.S.C. 552(a) and 1 CFR part 51. Copies may be obtained from Boeing Commercial Airplane Group, P.O. Box 3707, Seattle, Washington 98124–2207. Copies may be inspected at the FAA, Transport Airplane Directorate, 1601 Lind Avenue, SW., Renton, Washington; or at the Office of the Federal Register, 800 North Capitol Street, NW., suite 700, Washington, DC.

Effective Date

(i) This amendment becomes effective on July 6, 2000.

Issued in Renton, Washington, on May 23, 2000.

Donald L. Riggin,

Acting Manager, Transport Airplane Directorate, Aircraft Certification Service.

[FR Doc. 00–13449 Filed 5–31–00; 8:45 am]

BILLING CODE 4910–13–U

DEPARTMENT OF TRANSPORTATION

Federal Aviation Administration

14 CFR Part 39

[Docket No. 99–NM–30–AD; Amendment 39–11755; AD 2000–11–07]

RIN 2120–AA64

Airworthiness Directives; Boeing Model 747–200, –300, and –400 Series Airplanes

AGENCY: Federal Aviation Administration, DOT.

ACTION: Final rule.

SUMMARY: This amendment supersedes an existing airworthiness directive (AD), applicable to certain Boeing Model 747–200, –300, and –400 series airplanes, that currently requires repetitive high frequency eddy current (HFEC) inspections to detect cracking of the front spar web of the center section of the wing, and repair, if necessary. This amendment requires that the existing inspection be accomplished at a reduced threshold, and adds a requirement that the existing HFEC inspection be accomplished on repaired areas. This amendment is prompted by reports of cracking in repaired areas of the front spar web and cracking of the front spar web on an airplane that had accumulated fewer flight cycles than the inspection threshold of the existing AD. The actions specified by this AD are intended to prevent the leakage of fuel into the forward cargo bay, as a result of fatigue cracking in the front spar web, which could result in a potential fire hazard.

DATES: Effective July 6, 2000.

The incorporation by reference of Boeing Service Bulletin 747–57A2298, Revision 2, dated October 2, 1997, and Boeing Alert Service Bulletin 747–57A2298, Revision 3, dated January 7, 1999, as listed in the regulations, is approved by the Director of the Federal Register as of July 6, 2000.

The incorporation by reference of Boeing Alert Service Bulletin 747–57A2298, Revision 1, dated September 12, 1996, as listed in the regulations, was approved previously by the Director of the Federal Register as of April 2, 1997 (62 FR 8613, February 26, 1997).

ADDRESSES: The service information referenced in this AD may be obtained from Boeing Commercial Airplane Group, P.O. Box 3707, Seattle, Washington 98124–2207. This information may be examined at the Federal Aviation Administration (FAA), Transport Airplane Directorate, Rules Docket, 1601 Lind Avenue, SW., Renton, Washington; or at the Office of the Federal Register, 800 North Capitol Street, NW., suite 700, Washington, DC.

FOR FURTHER INFORMATION CONTACT: Tamara Anderson, Aerospace Engineer, Airframe Branch, ANM–120S, FAA, Seattle Aircraft Certification Office, 1601 Lind Avenue, SW., Renton, Washington; telephone (425) 227–2771; fax (425) 227–1181.

SUPPLEMENTARY INFORMATION: A proposal to amend part 39 of the Federal Aviation Regulations (14 CFR part 39) by superseding AD 97–05–01, amendment 39–9945 (62 FR 8613, February 26, 1997), which is applicable to certain Boeing Model 747–200, –300, and –400 series airplanes, was published in the **Federal Register** on December 21, 1999 (64 FR 71336). The action proposed to require that the repetitive high frequency eddy current (HFEC) inspections to detect cracking of the front spar web of the center section of the wing required by the existing AD be accomplished at a reduced threshold. The action also proposed to require that

the HFEC inspection be accomplished on repaired areas.

Comments

Interested persons have been afforded an opportunity to participate in the making of this amendment. Due consideration has been given to the comments received.

Support for the Proposal

One commenter supports the proposed rule.

Request To Reference Additional Source of Service Information

One commenter requests that the FAA revise paragraph (b) of the proposed rule to allow the HFEC inspection described in that paragraph to be accomplished in accordance with Boeing Alert Service Bulletin 747–57A2298, Revision 1, dated September 12, 1996. [The proposed rule references Boeing Service Bulletin 747–57A2298, Revision 2, dated October 2, 1997, and Revision 3, dated January 7, 1999, as appropriate sources of service information for accomplishment of the actions required by paragraph (b).] The commenter states that the inspection method to detect cracking of the forward side of the front spar web in Revision 1 of the alert service bulletin is identical to the method described in Revisions 2 and 3. The commenter also states that operators who have accomplished the HFEC inspection in accordance with paragraph (a)(1) of AD 97–05–01 [which is restated as paragraph (a)(1) of this AD] should be given credit for performing the inspection. To this end, the commenter requests that the compliance time of paragraph (b) of this AD be revised from ''Prior to accumulation of 12,000 total landings, or within 12 months after the effective date of this AD, whichever occurs later,'' to incorporate an option for the inspection to be accomplished ''within 1,400 landings after the previous HFEC inspection.''

The FAA partially concurs with the commenter's request. Although the inspection method is identical in Revisions 1, 2, and 3 of the service bulletin, as explained in the preamble of the proposed rule, Revisions 2 and 3 of the service bulletin describe an inspection of the aft side of the front spar web for areas where a repair is located on the forward side. For this reason, paragraph (b) of the proposed rule requires inspection in accordance with Revision 2 or 3 of the service bulletin. However, because the inspection is the same for airplanes without repairs in the area of the inspection, the FAA finds that inspections accomplished prior to the effective date of this AD in accordance with Revision 1 of the alert service bulletin are acceptable for compliance with the initial inspection required by paragraph (b) of this AD, *provided that the airplane does not have a repair installed in the inspection area.* A new ''Note 2'' has been added to this final rule accordingly. However, the FAA has determined that the accomplishment instructions in Revisions 2 and 3 of the service bulletin are clearer than those in Revision 1 of the alert service bulletin; therefore, inspections in accordance with paragraph (b) of this AD accomplished after the effective date of this AD are required to be accomplished in accordance with Revision 2 or 3 of the service bulletin.

With regard to the commenter's request to revise the compliance time for the actions required by paragraph (b) of this AD, the FAA finds that no change to the final rule is required beyond the inclusion of the new ''Note 2,'' as described above. Credit is always given for actions accomplished prior to the effective date of an AD by means of the phrase, ''Compliance: Required as indicated, unless accomplished previously.''

Request To Revise Cost Impact Information

One commenter requests that the FAA revise the estimated number of work hours stated in the cost impact section of the preamble of the proposed rule from 8 work hours to 48 work hours per airplane. The commenter points out that the manufacturer estimates 48 work hours per airplane in Boeing Alert Service Bulletin 747–57A2298, Revision 3, dated January 7, 1999. The commenter states that, based on its experience, the proposed actions take approximately 48 work hours.

The FAA does not concur with the commenter's request. The estimate of 48 work hours given in the service bulletin includes time for gaining access and closing up. The cost analysis in AD rulemaking actions, however, typically does not include incidental costs, such as the time required to gain access and close up, planning time, or time necessitated by other administrative actions. Because incidental costs may vary significantly from operator to operator, they are almost impossible to calculate. The number of work hours necessary to accomplish the required actions, specified as 8 in the cost impact information in the proposal and restated below, represents the time necessary to perform only the actions actually required by this AD (that is, the inspection). No change to the final rule is necessary in this regard.

Request To Clarify ''Terminating Action'' Statement in Paragraph (b)

One commenter, the airplane manufacturer, states that one operator was confused by the statement in paragraph (b) of the proposed rule that, ''Accomplishment of the HFEC inspection constitutes terminating action for the repetitive inspection requirements of paragraph (a) of this AD.'' The operator was confused because paragraph (a) of the proposed rule specifies repetitive inspections at intervals not to exceed 1,400 landings. The operator found these statements contradictory.

The commenter makes no specific request for a change to the proposed rule. The FAA infers that the operator to whom the commenter refers does not understand the meaning of ''terminating action.'' Paragraph (a) of this AD states that the inspection in that paragraph is to be performed ''at the time specified in paragraph (a)(1) or (a)(2) of this AD, * * * until accomplishment of the requirements of paragraph (b) of this AD.'' As stated previously, paragraph (b) of this AD states that ''Accomplishment of the HFEC inspection constitutes terminating action for the repetitive inspection requirements of paragraph (a) of this AD.'' Once the initial inspection in accordance with paragraph (b) of this Ad has been accomplished, the repetitive inspections in paragraph (a) of this Ad are no longer necessary and need not be accomplished. The repetitive inspections specified in paragraph (b) of this AD must be accomplished at intervals not to exceed 1,400 landings (as stated in that paragraph). The FAA finds that no further clarification is necessary, and no change to the final rule is necessary in this regard.

Request To Revise AD Referencing Supplemental Structural Inspection Items

One commenter requests that the FAA revise AD 94–15–18, amendment 39–8989 (59 FR 41233, August 11, 1994), to exclude Supplemental Structural Inspection Document (SSID) Items W–3A and W–3B on SSID-candidate airplanes that are included in the effectivity listing of Boeing Service Bulletin 747–57A2298. The commenter states that the SSID inspections allow detailed visual and surveillance inspections of the front spar web at ''D''-check intervals using sampling methods. This AD requires HFEC inspections of the front spar web at intervals not to exceed 1,400 landings

for all airplanes included in the applicability of this AD.

The FAA does not concur with the commenter's request. The commenter's request is not relevant to this proposed rule. In the future, should the FAA consider further rulemaking to revise AD 94–15–18, the issue raised by the commenter would be appropriate to address. No change to the final rule is necessary in this regard.

Conclusion

After careful review of the available data, including the comments noted above, the FAA has determined that air safety and the public interest require the adoption of the rule with the changes previously described. The FAA has determined that these changes will neither increase the economic burden on any operator nor increase the scope of the AD.

Cost Impact

There are approximately 485 Model 747–200, –300, and –400 series airplanes of the affected design in the worldwide fleet. The FAA estimates that 105 airplanes of U.S. registry will be affected by this AD.

The inspections that are currently required by AD 97–05–01 and retained in this AD, take approximately 8 work hours per airplane to accomplish, at an average labor rate of $60 per work hour. Based on these figures, the cost impact of the currently required actions on U.S. operators is estimated to be $50,400, or $480 per airplane, per inspection cycle.

The cost impact figure discussed above is based on assumptions that no operator has yet accomplished any of the requirements of this AD action, and that no operator would accomplish those actions in the future if this AD were not adopted.

Regulatory Impact

The regulations adopted herein will not have a substantial direct effect on the States, on the relationship between the national Government and the States, or on the distribution of power and responsibilities among the various levels of government. Therefore, it is determined that this final rule does not have federalism implications under Executive Order 13132.

For the reasons discussed above, I certify that this action (1) is not a ''significant regulatory action'' under Executive Order 12866; (2) is not a ''significant rule'' under DOT Regulatory Policies and Procedures (44 FR 11034, February 26, 1979); and (3) will not have a significant economic impact, positive or negative, on a substantial number of small entities under the criteria of the Regulatory Flexibility Act. A final evaluation has been prepared for this action and it is contained in the Rules Docket. A copy of it may be obtained from the Rules Docket at the location provided under the caption **ADDRESSES**.

List of Subjects in 14 CFR Part 39

Air transportation, Aircraft, Aviation safety, Incorporation by reference, Safety.

Adoption of the Amendment

Accordingly, pursuant to the authority delegated to me by the Administrator, the Federal Aviation Administration amends part 39 of the Federal Aviation Regulations (14 CFR part 39) as follows:

PART 39—AIRWORTHINESS DIRECTIVES

1. The authority citation for part 39 continues to read as follows:

Authority: 49 U.S.C. 106(g), 40113, 44701.

§ 39.13 [Amended]

2. Section 39.13 is amended by removing amendment 39–9945 (62 FR 8613, February 26, 1997), and by adding a new airworthiness directive (AD), amendment 39–11755, to read as follows:

2000–11–07 Boeing: Amendment 39–11755. Docket 99–NM–30–AD. Supersedes AD 97–05–01, Amendment 39–9945.

Applicability: Model 747–200, –300, and –400 series airplanes; up to and including line number 744; certificated in any category.

Note 1: This AD applies to each airplane identified in the preceding applicability provision, regardless of whether it has been modified, altered, or repaired in the area subject to the requirements of this AD. For airplanes that have been modified, altered, or repaired so that the performance of the requirements of this AD is affected, the owner/operator must request approval for an alternative method of compliance in accordance with paragraph (d) of this AD. The request should include an assessment of the effect of the modification, alteration, or repair on the unsafe condition addressed by this AD; and, if the unsafe condition has not been eliminated, the request should include specific proposed actions to address it.

Compliance: Required as indicated, unless accomplished previously.

To prevent the leakage of fuel into the forward cargo bay, as a result of fatigue cracking in the front spar web, which could result in a potential fire hazard, accomplish the following:

Restatement of Requirement of AD 97–05–01

Repetitive Inspections

(a) Perform a high frequency eddy current (HFEC) inspection to detect cracking of the front spar web of the center section of the wing, in accordance with Boeing Alert Service Bulletin 747–57A2298, Revision 1, dated September 12, 1996; Boeing Service Bulletin 747–57A2298, Revision 2, dated October 2, 1997; or Boeing Alert Service Bulletin 747–57A2298, Revision 3, dated January 7, 1999; at the time specified in paragraph (a)(1) or (a)(2) of this AD, as applicable, until accomplishment of the requirements of paragraph (b) of this AD.

(1) For airplanes that have accumulated 12,000 to 17,999 total landings as of April 2, 1997 (the effective date of AD 97–05–01, amendment 39–9945): Perform the initial inspection within 12 months after April 2, 1997, unless previously accomplished within the last 12 months prior to April 2, 1997. Perform this inspection again prior to the accumulation of 18,000 total landings or within 1,400 landings, whichever occurs later; after accomplishing the initial inspection, and thereafter at intervals not to exceed 1,400 landings.

(2) For all other airplanes: Perform the initial inspection prior to the accumulation of 18,000 total landings or within 12 months after April 2, 1997, whichever occurs later. Repeat this inspection thereafter at intervals not to exceed 1,400 landings.

New Requirements of This AD

Repetitive Inspections

(b) Prior to accumulation of 12,000 total landings, or within 12 months after the effective date of this AD, whichever occurs later, perform an HFEC inspection to detect cracking of the front spar web of the center section of the wing, in accordance with Boeing Service Bulletin 747–57A2298, Revision 2, dated October 2, 1997; or Boeing Alert Service Bulletin 747–57A2298, Revision 3, dated January 7, 1999. Repeat the HFEC inspection thereafter at intervals not to exceed 1,400 landings. Accomplishment of the HFEC inspection constitutes terminating action for the repetitive inspection requirements of paragraph (a) of this AD.

Note 2: Inspections accomplished prior to the effective date of this AD in accordance with Boeing Alert Service Bulletin 747–57A2298, Revision 1, dated September 12, 1996, are acceptable for compliance with the initial inspection required by paragraph (b) of this AD, provided that the airplane does not have a repair installed in the inspection area.

Repair

(c) If any cracking is detected during any inspection required by paragraph (a) or (b) of this AD, prior to further flight, confirm the cracking with secondary procedures in accordance with Boeing Service Bulletin 747–57A2298, Revision 2, dated October 2, 1997, or Boeing Alert Service Bulletin 747–57A2298, Revision 3, dated January 7, 1999. Thereafter repeat the HFEC inspection required by paragraph (a) or (b) of this AD at intervals not to exceed 1,400 landings.

(1) If any vertical crack is found that is less than 10 inches in length and has not extended in a diagonal direction, prior to further flight, repair in accordance with the service bulletin.

(2) If any vertical crack is found that is 10 inches or greater in length; or if any crack is

found that has extended in a diagonal direction (regardless of the length); or if any crack is found that would affect an existing repair, prior to further flight, repair in accordance with a method approved by the Manager, Seattle Aircraft Certification Office (ACO), FAA, Transport Airplane Directorate; or in accordance with data meeting the type certification basis of the airplane approved by a Boeing Designated Engineering Representative who has been authorized by the FAA to make such findings. For a repair method to be approved by the Manager, Seattle ACO, as required by this paragraph, the approval letter must specifically reference this AD.

Alternative Methods of Compliance

(d) An alternative method of compliance or adjustment of the compliance time that provides an acceptable level of safety may be used if approved by the Manager, Seattle ACO. Operators shall submit their requests through an appropriate FAA Principal Maintenance Inspector, who may add comments and then send it to the Manager, Seattle ACO.

Note 3: Information concerning the existence of approved alternative methods of compliance with this AD, if any, may be obtained from the Seattle ACO.

Special Flight Permits

(e) Special flight permits may be issued in accordance with sections 21.197 and 21.199 of the Federal Aviation Regulations (14 CFR 21.197 and 21.199) to operate the airplane to a location where the requirements of this AD can be accomplished.

Incorporation by Reference

(f) Except as provided by paragraph (c)(2) of this AD, the actions shall be done in accordance with Boeing Alert Service Bulletin 747–57A2298, Revision 1, dated September 12, 1996; Boeing Service Bulletin 747–57A2298, Revision 2, dated October 2, 1997; or Boeing Alert Service Bulletin 747–57A2298, Revision 3, dated January 7, 1999; as applicable. This incorporation by reference was approved by the Director of the Federal Register in accordance with 5 U.S.C. 552(a) and 1 CFR part 51.

(1) The incorporation by reference of Boeing Service Bulletin 747–57A2298, Revision 2, dated October 2, 1997; and Boeing Alert Service Bulletin 747–57A2298, Revision 3, dated January 7, 1999; is approved by the Director of the Federal Register in accordance with 5 U.S.C. 552(a) and 1 CFR part 51.

(2) The incorporation by reference of Boeing Alert Service Bulletin 747–57A2298, Revision 1, dated September 12, 1996; was approved previously by the Director of the Federal Register as of April 2, 1997 (62 FR 8613, February 26, 1997).

(3) Copies may be obtained from Boeing Commercial Airplane Group, P.O. Box 3707, Seattle, Washington 98124–2207. Copies may be inspected at the FAA, Transport Airplane Directorate, 1601 Lind Avenue, SW., Renton, Washington; or at the Office of the Federal Register, 800 North Capitol Street, NW., suite 700, Washington, DC.

Effective Date

(g) This amendment becomes effective on July 6, 2000.

Issued in Renton, Washington, on May 23, 2000.

Donald L. Riggin,

Acting Manager, Transport Airplane Directorate, Aircraft Certification Service.

[FR Doc. 00–13448 Filed 5–31–00; 8:45 am]

BILLING CODE 4910–13–U

DEPARTMENT OF TRANSPORTATION

Federal Aviation Administration

14 CFR Part 39

[Docket No. 99–NM–228–AD; Amendment 39–11756; AD 2000–11–08]

RIN 2120–AA64

Airworthiness Directives; Boeing Model 747 and 767 Series Airplanes Powered by General Electric Model CF6–80C2 Series Engines

AGENCY: Federal Aviation Administration, DOT.

ACTION: Final rule.

SUMMARY: This amendment supersedes an existing airworthiness directive (AD), applicable to certain Boeing Model 747 and 767 series airplanes, that currently requires revising the FAA-approved Airplane Flight Manual (AFM) to prohibit the use of certain fuels; and either replacing an existing placard with a new placard, or replacing all dribble flow fuel nozzles (DFFN) with standard fuel nozzles, which terminates the requirements for the new placard and AFM revision. This amendment continues these requirements and adds identical requirements applicable to airplanes on which standard fuel nozzles are not installed. This amendment is prompted by a report of an engine flameout due to use of JP–4 or Jet B fuel during certification testing on an engine with DFFN's installed.

The actions specified by this AD are intended to prevent such engine flameouts and consequent engine shutdown.

DATES: Effective July 6, 2000.

The incorporation by reference of certain publications listed in the regulations is approved by the Director of the Federal Register as of July 6, 2000.

The incorporation by reference of certain other publications, as listed in the regulations, was approved previously by the Director of the Federal Register as of May 1, 1998 (63 FR 18817, April 16, 1998).

ADDRESSES: The service information referenced in this AD may be obtained from Boeing Commercial Airplane Group, P.O. Box 3707, Seattle, Washington 98124–2207. This information may be examined at the Federal Aviation Administration (FAA), Transport Airplane Directorate, Rules Docket, 1601 Lind Avenue, SW., Renton, Washington; or at the Office of the Federal Register, 800 North Capitol Street, NW., suite 700, Washington, DC.

FOR FURTHER INFORMATION CONTACT: Dionne M. Krebs, Aerospace Engineer, Propulsion Branch, ANM–140S, FAA, Transport Airplane Directorate, Seattle Aircraft Certification Office, 1601 Lind Avenue, SW., Renton, Washington 98055–4056; telephone (425) 227–2250; fax (425) 227–1181.

SUPPLEMENTARY INFORMATION: A proposal to amend part 39 of the Federal Aviation Regulations (14 CFR part 39) by superseding AD 98–08–23, amendment 39–10472 (63 FR 18817, April 16, 1998), which is applicable to certain Boeing Model 747 and 767 series airplanes, was published in the **Federal Register** on December 15, 1999 (64 FR 69964). The action proposed to continue the requirements of AD 98–08–23 and add identical requirements applicable to airplanes on which standard fuel nozzles are not installed.

Comments

Interested persons have been afforded an opportunity to participate in the making of this amendment. Due consideration has been given to the comments received.

Request To Add New Part Number to Table 1

Two commenters request that Table 1 of the proposed rule be revised to include a certain General Electric (GE) fuel flow nozzle. Table 1 of the proposed rule lists GE fuel nozzles that are acceptable for installation. The commenters state that the GE fuel flow nozzle having part number 9331M72P22 is a previously certified standard (*i.e.,* non-dribble) fuel nozzle configuration that should be included on this list. The FAA concurs with the commenters' request and has revised Table 1 of this final rule accordingly.

Request To List Dribble Flow Fuel Nozzle Part Numbers

One commenter requests that, in order to preclude the need for future rulemaking, the FAA revise the proposed rule to list the part numbers for the dribble flow fuel nozzles (DFFN), rather than the acceptable part numbers, in Table 1 of this AD or to reference the GE service bulletin. The commenter notes that the proposed rule references acceptable GE fuel nozzle part numbers

instead of DFFN part numbers to avoid the need for future AD revisions as new DFFN part numbers are approved. However, the commenter points out that, as GE improves its products, the list of acceptable part numbers may expand beyond those listed in Table 1 of the proposed rule. The commenter also indicates that the wording of the proposed rule is confusing because the existing AD referenced DFFN part numbers directly.

The FAA does not concur with the commenter's request. The FAA concurs with the commenter's statement that listing standard fuel nozzle part numbers in Table 1 of the proposed rule is intended to avoid future AD revisions as new DFFN part numbers are approved. However, if the FAA was to continue to list DFFN part numbers in the proposed AD, the only way to require a restriction on wide cut fuels for Model 747 and 767 series airplanes equipped with DFFN's certified in the future would be to supersede this AD. The FAA finds it inappropriate to impose the additional administrative burden of a supersedure of this AD on operators (as well as on the FAA itself). Also, the FAA notes that standard fuel nozzle part numbers certified in the future (and, therefore, not listed in Table 1 of the proposed rule) can be approved as an alternative method of compliance to this AD, in accordance with paragraph (g)(1) of this AD. No change to the final rule is necessary in this regard.

Request To Revise Applicable Service Bulletins

One commenter requests that the applicable service bulletins be revised to include in the effectivity listing only airplanes that are currently operating with DFFN's. The commenter notes that Boeing Alert Service Bulletin 747–11A2052, Revision 1, dated August 5, 1999, includes additional airplanes in the effectivity listing. The commenter states that these airplanes were added to the effectivity listing to ensure that all affected airplanes are modified in accordance with the alert service bulletin. The commenter also states that the proposed rule does not consider airplanes having documentation that specifies compliant delivery configurations. The commenter notes that some operators that have airplanes already in full compliance with this AD will have to apply to the FAA for relief, which will cost additional time and effort for both the FAA and affected operators. The commenter states that its airplanes are not subject to the requirements of the existing AD, but under the proposed rule, it will have to show compliance for airplanes that are not affected.

The FAA acknowledges that Boeing Alert Service Bulletin 747–11A2052, Revision 1, adds airplanes to the effectivity listing of that service bulletin. However, the FAA does not concur with the commenter that airplanes added to the effectivity listing of Revision 1 of the alert service bulletin are not subject to the existing AD. AD 98–08–23 is applicable to all Boeing Model 747 and 767 series airplanes powered by GE Model CF6–80C2 series engines. The airplanes added to the effectivity listing of Revision 1 of the service bulletin were added to make the service bulletin consistent with the applicability of AD 98–08–23. The applicability of the proposed rule is the same as that of the existing AD. The FAA finds that no change to the service bulletin is necessary.

The FAA also does not concur with the commenter that the proposed rule does not provide for airplanes with documentation that specifies compliant delivery configurations. If an operator has documentation provided by the manufacturer upon delivery of a new airplane that positively shows that the airplane is equipped with fuel nozzles having part numbers listed in Table 1 of this AD, no further action is necessary, provided that all of the other airplanes in the operator's fleet are equipped with standard (non-DFFN) nozzles.

The FAA also does not concur with the commenter that its airplanes are not subject to the existing AD because the operator's fleet includes only airplanes equipped with standard fuel flow nozzles. As explained previously, AD 98–08–23 applies to all Boeing Model 747 and 767 series airplanes powered by GE CF6–80C2 series engines. Therefore, the Model 747 and 767 series airplanes powered by General Electric CF6–80C2 series engines in the commenter's fleet are subject to the requirements of AD 98–08–23. The fact that the operator has no airplane equipped with DFFN's having the affected part numbers means that the operator is not required to restrict the use of wide cut fuels. However, if the operator introduces an airplane with DFFN's into its fleet, it would be required to comply with the Airplane Flight Manual (AFM) revision and placarding requirements described in AD 98–08–23 and retained in this AD. No change to the final rule is necessary in this regard.

Request To Make Paragraph (c)(1) Consistent With AFM

One commenter requests that the FAA revise paragraph (c)(1) of the proposed rule to be consistent with the wording used in the applicable Boeing AFM. The commenter states that the Boeing AFM's do not add the sentence identified in paragraphs (a)(1)(ii) and (c)(2) of the proposed rule to paragraph 2 of the Engine Fuel System section of the AFM. Instead, the sentence is included in paragraph 1 of the Engine Fuel System section of the AFM. Therefore, the commenter proposes moving the sentence in paragraphs (a)(1)(ii) and (c)(2) to the end of the paragraphs provided in paragraphs (a)(1)(i) and (c)(1) of the proposed rule.

The FAA does not concur with the commenter's request. The proposed rule carries over the requirements of AD 98–08–23, including the changes to the text of the AFM. Because the commenter's proposal does not substantively change the intent of the proposed AFM revision, the FAA considers such a change to the proposed rule to be unnecessary and potentially confusing. The operator may choose to obtain approval for its proposed wording by requesting an alternative method of compliance in accordance with paragraph (g)(1) of this AD. No change to the final rule is necessary in this regard.

Conclusion

After careful review of the available data, including the comments noted above, the FAA has determined that air safety and the public interest require the adoption of the rule with the change previously described. The FAA has determined that this change will neither increase the economic burden on any operator nor increase the scope of the AD.

Cost Impact

There are approximately 430 Model 747 and 767 series airplanes of the affected design in the worldwide fleet. The FAA estimates that 115 airplanes of U.S. registry will be affected by this AD.

The AFM revision that is currently required by AD 98–08–23, and retained in this AD, takes approximately 1 work hour per airplane to accomplish, at an average labor rate of $60 per work hour. Based on these figures, the cost impact of this current requirement on U.S. operators is estimated to be $6,900, or $60 per airplane.

The placard replacement that is currently required by AD 98–08–23, and retained in this AD, takes approximately 1 work hour per airplane to accomplish, at an average labor rate of $60 per work hour. Required parts cost approximately $12 per airplane. Based on these figures, the cost impact of this current requirement on U.S. operators is

estimated to be $8,280, or $72 per airplane.

The cost impact figures discussed above are based on assumptions that no operator has yet accomplished any of the requirements of this AD action, and that no operator would accomplish those actions in the future if this AD were not adopted.

Regulatory Impact

The regulations adopted herein will not have a substantial direct effect on the States, on the relationship between the national Government and the States, or on the distribution of power and responsibilities among the various levels of government. Therefore, it is determined that this final rule does not have federalism implications under Executive Order 13132.

For the reasons discussed above, I certify that this action (1) is not a ''significant regulatory action'' under Executive Order 12866; (2) is not a ''significant rule'' under DOT Regulatory Policies and Procedures (44 FR 11034, February 26, 1979); and (3) will not have a significant economic impact, positive or negative, on a substantial number of small entities under the criteria of the Regulatory Flexibility Act. A final evaluation has been prepared for this action and it is contained in the Rules Docket. A copy of it may be obtained from the Rules Docket at the location provided under the caption **ADDRESSES**.

List of Subjects in 14 CFR Part 39

Air transportation, Aircraft, Aviation safety, Incorporation by reference, Safety.

Adoption of the Amendment

Accordingly, pursuant to the authority delegated to me by the Administrator, the Federal Aviation Administration amends part 39 of the Federal Aviation Regulations (14 CFR part 39) as follows:

PART 39—AIRWORTHINESS DIRECTIVES

1. The authority citation for part 39 continues to read as follows:

Authority: 49 U.S.C. 106(g), 40113, 44701.

§ 39.13 [Amended]

2. Section 39.13 is amended by removing amendment 39–10472 (63 FR 18817, April 16, 1998), and by adding a new airworthiness directive (AD), amendment 39–11756, to read as follows:

2000–11–08 Boeing: Amendment 39–11756. Docket 99–NM–228–AD. Supersedes AD 98–08–23, amendment 39–10472.

Applicability: Model 747 and 767 series airplanes, powered by General Electric Model CF6–80C2 series engines, certificated in any category.

Note 1: This AD applies to each airplane identified in the preceding applicability provision, regardless of whether it has been modified, altered, or repaired in the area subject to the requirements of this AD. For airplanes that have been modified, altered, or repaired so that the performance of the requirements of this AD is affected, the owner/operator must request approval for an alternative method of compliance in accordance with paragraph (g)(1) of this AD. The request should include an assessment of the effect of the modification, alteration, or repair on the unsafe condition addressed by this AD; and, if the unsafe condition has not been eliminated, the request should include specific proposed actions to address it.

Compliance: Required as indicated, unless accomplished previously.

To prevent engine flameouts due to the use of JP–4 or Jet B fuel on certain engines with dribble flow fuel nozzles (DFFN) installed, and consequent engine shutdown, accomplish the following:

Restatement of Requirements of AD 98–08–23

Airplane Flight Manual Revision

(a) If a DFFN having General Electric part number 9331M72P33, 9331M72P34, or 9331M72P41 is installed on any airplane in a specific operator's fleet, accomplish the requirements of paragraphs (a)(1) and (a)(2) of this AD; in accordance with either Boeing Alert Service Bulletin 747–11A2052, dated September 11, 1997, or Revision 1, dated August 5, 1999 (for Model 747 series airplanes); or Boeing Alert Service Bulletin 767–11A0031, dated September 11, 1997, or Revision 1, dated August 12, 1999 (for Model 767 series airplanes); as applicable.

(1) Within 14 days after May 1, 1998 (the effective date of AD 98–08–23), all airplanes in a specific operator's fleet must revise Section 1 of the Limitations Section of the FAA-approved AFM to include the following procedures. This may be accomplished by inserting a copy of this AD into the AFM.

(i) Revise paragraph 1 of the Engine Fuel System section to read as follows: ''The fuel designation is General Electric (GE) Specification D50TF2, as revised. Fuel conforming to commercial jet fuel specification ASTM–D–1655, Jet A, and Jet A–1 are authorized for unlimited use in this engine. Fuels conforming to MIL–T–5624 grade JP–5 and MIL–T–83113 grade JP–8 are acceptable alternatives. The engine will operate satisfactorily with any of the foregoing fuels or any mixture thereof.'' And,

(ii) Add the following sentence to paragraph 2 of the Engine Fuel System section: ''The use of Jet B and JP–4 fuel is prohibited.''

Modification

(2) Within 30 days after May 1, 1998, all airplanes in a specific operator's fleet must accomplish the requirements of paragraph (a)(2)(i) or (a)(2)(ii) of this AD, as applicable.

(i) Remove the existing placard on the door of the fueling control panel and replace it with a new placard that restricts the use of JP–4 and Jet B fuels (wide cut fuels), in accordance with the applicable alert service bulletin. Or

(ii) Remove the DFFN's, and replace them with standard fuel nozzles, in accordance with the applicable alert service bulletin. When an operator's entire fleet has had all DFFN's replaced with standard fuel nozzles, the AFM revision required by paragraphs (a)(1)(i) and (a)(1)(ii) of this AD may be removed from the AFM, and the placard required by paragraph (a)(2)(i) of this AD may be removed from each airplane.

Spares

(b) As of May 1, 1998, no person shall install any DFFN having General Electric part number 9331M72P33, 9331M72P34, or 9331M72P41 on any airplane unless the requirements specified by paragraphs (a)(1)(i), (a)(1)(ii), and (a)(2)(i) of this AD have been accomplished for the operator's entire fleet.

New Requirements of This AD

Airplane Flight Manual Revision

(c) If a fuel nozzle NOT having one of the General Electric part numbers listed in Table 1 of this AD is installed on any airplane in a specific operator's fleet: Within 14 days after the effective date of this AD, revise Section 1 of the Limitations Section of the FAA-approved AFM for each airplane in the operator's fleet to include the following procedures. This may be accomplished by inserting a copy of this AD into the AFM.

TABLE 1.—GENERAL ELECTRIC FUEL NOZZLES ACCEPTABLE FOR INSTALLATION

Part Number
9331M72P14
9331M72P20
9331M72P21
9331M72P22
9331M72P23
9331M72P24
9331M72P27
9331M72P28
9331M72P39
9331M72P40
1968M49P03
1968M49P04
1968M49P05
1968M49P06

(1) Revise paragraph 1 of the Engine Fuel System section to read as follows: ''The fuel designation is General Electric (GE) Specification D50TF2, as revised. Fuel conforming to commercial jet fuel specification ASTM–D–1655, Jet A, and Jet A–1 are authorized for unlimited use in this engine. Fuels conforming to MIL–T–5624 grade JP–5 and MIL–T–83113 grade JP–8 are acceptable alternatives. The engine will operate satisfactorily with any of the foregoing fuels or any mixture thereof.'' And,

(2) Add the following sentence to paragraph 2 of the Engine Fuel System section: ''The use of Jet B and JP–4 fuel is prohibited.''

Modification

(d) If a fuel nozzle NOT having one of the General Electric part numbers listed in Table 1 of this AD is installed on any airplane in a specific operator's fleet: Within 30 days after the effective date of this AD, accomplish the requirements of paragraph (d)(1) or (d)(2) of this AD on each airplane in the operator's fleet, in accordance with either Boeing Alert Service Bulletin 747–11A2052, Revision 1, dated August 5, 1999 (for Model 747 series airplanes); or Boeing Alert Service Bulletin 767–11A0031, Revision 1, dated August 12, 1999 (for Model 767 series airplanes); as applicable.

(1) Remove the existing placard on the door of the fueling control panel and replace it with a new placard that restricts the use of JP–4 and Jet B fuels (wide cut fuels), in accordance with the applicable alert service bulletin. Or

(2) Remove any fuel nozzle having a part number NOT listed in Table 1 of this AD, and replace it with a fuel nozzle having a part number listed in Table 1 of this AD, in accordance with the applicable alert service bulletin. When an operator's entire fleet has only fuel nozzles having a part number listed in Table 1 of this AD installed, the AFM revision required by paragraph (c) of this AD may be removed from the AFM, and the placard required by paragraph (d)(1) of this AD may be removed from each airplane.

(e) Except as provided by paragraphs (b) and (f) of this AD, if all fuel nozzles installed on any airplane in a specific operator's fleet have one of the General Electric part numbers listed in Table 1 of this AD, no further action is required by this AD.

Spares

(f) As of the effective date of this AD, no person shall install any fuel nozzle NOT having one of the General Electric part numbers listed in Table 1 of this AD on any airplane unless the requirements specified by paragraphs (c)(1), (c)(2), and (d)(1) of this AD have been accomplished for the operator's entire fleet.

Alternative Methods of Compliance

(g)(1) An alternative method of compliance or adjustment of the compliance time that provides an acceptable level of safety may be used if approved by the Manager, Seattle Aircraft Certification Office (ACO), FAA, Transport Airplane Directorate. Operators shall submit their requests through an appropriate FAA Principal Maintenance Inspector, who may add comments and then send it to the Manager, Seattle ACO.

(2) Alternative methods of compliance, approved previously in accordance with AD 98–08–23, amendment 39–10472, are approved as alternative methods of compliance with this AD.

Note 2: Information concerning the existence of approved alternative methods of compliance with this AD, if any, may be obtained from the Seattle ACO.

Special Flight Permits

(h) Special flight permits may be issued in accordance with sections 21.197 and 21.199 of the Federal Aviation Regulations (14 CFR 21.197 and 21.199) to operate the airplane to a location where the requirements of this AD can be accomplished.

Incorporation by Reference

(i) Except as provided by paragraph (c) of this AD, the actions shall be done in accordance with Boeing Alert Service Bulletin 747–11A2052, dated September 11, 1997, or Boeing Alert Service Bulletin 747–11A2052, Revision 1, dated August 5, 1999 (for Model 747 series airplanes); or Boeing Alert Service Bulletin 767–11A0031, dated September 11, 1997, or Boeing Alert Service Bulletin 767–11A0031, Revision 1, dated August 12, 1999 (for Model 767 series airplanes); as applicable.

(1) The incorporation by reference of Boeing Alert Service Bulletin 747–11A2052, Revision 1, dated August 5, 1999; and Boeing Alert Service Bulletin 767–11A0031, Revision 1, dated August 12, 1999; is approved by the Director of the Federal Register in accordance with 5 U.S.C. 552(a) and 1 CFR part 51.

(2) The incorporation by reference of Boeing Alert Service Bulletin 747–11A2052, dated September 11, 1997; and Boeing Alert Service Bulletin 767–11A0031, dated September 11, 1997; was approved previously by the Director of the Federal Register as of May 1, 1998 (63 FR 18817, April 16, 1998).

(3) Copies may be obtained from Boeing Commercial Airplane Group, P.O. Box 3707, Seattle, Washington 98124–2207. Copies may be inspected at the FAA, Transport Airplane Directorate, 1601 Lind Avenue, SW., Renton, Washington; or at the Office of the Federal Register, 800 North Capitol Street, NW., suite 700, Washington, DC.

Effective Date

(j) This amendment becomes effective on July 6, 2000.

Issued in Renton, Washington, on May 23, 2000.

Donald L. Riggin,

Acting Manager, Transport Airplane Directorate, Aircraft Certification Service.

[FR Doc. 00–13447 Filed 5–31–00; 8:45 am]

BILLING CODE 4910–13–U

DEPARTMENT OF TRANSPORTATION

Federal Aviation Administration

14 CFR Part 39

[Docket No. 99–NM–343–AD; Amendment 39–11757; AD 2000–11–09]

RIN 2120–AA64

Airworthiness Directives; Airbus Model A319, A320, and A321 Series Airplanes

AGENCY: Federal Aviation Administration, DOT.

ACTION: Final rule.

SUMMARY: This amendment adopts a new airworthiness directive (AD), applicable to certain Airbus Model A319, A320, and A321 series airplanes, that requires repetitive inspections of the sliding tube subassembly on the main landing gear (MLG) to detect cracks, and replacement of a cracked subassembly with a new subassembly. This amendment also eventually requires a more extensive, one-time inspection of the same area and corrective actions, if necessary; which terminates the repetitive inspections. This amendment is prompted by issuance of mandatory continuing airworthiness information by a foreign civil airworthiness authority. The actions specified by this AD are intended to prevent cracking of the MLG sliding tube subassembly, which could result in collapse of the MLG.

DATES: Effective July 6, 2000.

The incorporation by reference of certain publications listed in the regulations is approved by the Director of the Federal Register as of July 6, 2000.

ADDRESSES: The service information referenced in this AD may be obtained from Airbus Industrie, 1 Rond Point Maurice Bellonte, 31707 Blagnac Cedex, France. This information may be examined at the Federal Aviation Administration (FAA), Transport Airplane Directorate, Rules Docket, 1601 Lind Avenue, SW., Renton, Washington; or at the Office of the Federal Register, 800 North Capitol Street, NW., suite 700, Washington, DC.

FOR FURTHER INFORMATION CONTACT: Norman B. Martenson, Manager, International Branch, ANM–116, FAA, Transport Airplane Directorate, 1601 Lind Avenue, SW., Renton, Washington 98055–4056; telephone (425) 227–2110; fax (425) 227–1149.

SUPPLEMENTARY INFORMATION: A proposal to amend part 39 of the Federal Aviation Regulations (14 CFR part 39) to include an airworthiness directive (AD) that is applicable to certain Airbus Model A319, A320, and A321 series airplanes was published in the **Federal Register** on February 15, 2000 (65 FR 7465). That action proposed to require repetitive inspections of the sliding tube subassembly on the main landing gear (MLG) to detect cracks, and replacement of a cracked subassembly with a new subassembly. That action also proposed to eventually require a more extensive, one-time inspection of the same area and corrective actions, if necessary; which would terminate the repetitive inspections.

Comments Received

Interested persons have been afforded an opportunity to participate in the making of this amendment. Due

consideration has been given to the comments received.

Previous Inspections of MLG Sliding Tubes

Two commenters request that the applicability of the proposed AD be revised to exclude airplanes on which certain conditions regarding the MLG sliding tubes are met. Specifically, the commenters request that airplanes be excluded if it can be determined that (1) the MLG sliding tubes have never been removed; (2) a magnetic particle non-destructive test (NDT2) inspection has never been accomplished on the installed MLG sliding tubes; or, (3) an NDT2 inspection has been accomplished on the installed MLG sliding tubes only after removal of attaching hardware and bushings. One commenter states that, contrary to the assertion in the proposed AD that these conditions cannot be easily determined, each operator is required to track such information for its airplanes. The commenter notes that, since an MLG sliding tube is a safe life-limited item, operators are required to maintain complete records of maintenance and overhaul. And, since the NDT2 inspection can be performed only in a shop environment, there should be no concern that such an inspection could have occurred ''on-wing,'' without generation of proper maintenance records.

The FAA acknowledges that operators are required to maintain status records for each safe life-limited part with regard to the life limits of that part, i.e., hours or cycles of operation. However, not all operators maintain complete maintenance records for the life of the part, and such records would be necessary in order to make a definitive determination of the conditions defined above. The FAA has no objection to revising the applicability of the AD to exclude those airplanes on which one of these conditions can be definitively shown. The FAA has revised the applicability accordingly, and has added a ''NOTE'' to the final rule to specify that complete maintenance records are considered necessary in order to determine whether one of the above conditions has been met.

Exemption from Requirements of AD

One commenter, an operator, states that its airplanes have never been subjected to an NDT2 inspection (as referenced in Airbus Service Bulletin A320–32–1189, dated December 23, 1998), and hence are exempt from the repetitive inspections required by the proposed AD.

The FAA considers that reiteration of the requirements of the specified applicability of the proposed AD is necessary. The commenter is referring to a determination that an NDT2 inspection has never been accomplished [as described in condition (2) above] on its airplanes. All operators should be aware that the applicability of this AD (or any other AD) takes precedence over the effectivity listed in the referenced service bulletin. The exemption declared by the commenter, based on the information in the service bulletin, was NOT included in the applicability of the proposed AD, for reasons described in the ''Differences'' section of the preamble of the proposed AD. Therefore, the commenter was indeed subject to the requirements of the AD with the applicability as proposed. However, since the applicability of the final rule has been revised, as discussed above, the commenter may now reevaluate its determination of affected airplanes based on the applicability specified in the final rule.

Revision to Applicability of AD

One commenter states that the applicability of the proposed AD is confusing, and suggests that it be revised to include airplanes ''only if the initial issue of Messier-Dowty SB 200–32–250 has been accomplished.'' (The original Messier-Dowty service bulletin called for an NDT2 inspection without specifying removal of the jacking dome bushings. If the jacking dome bushings were not removed, high temperature damage could have occurred to the MLG bore and bushings.) The commenter states that Airbus Service Bulletin A320–32–1189, dated December 23, 1998, was issued to alert operators of potential cracking that can occur if the NDT2 inspection procedures in the original Messier-Dowty service bulletin were used.

The FAA does not concur with limiting the applicability as suggested, due to potential difficulties in determining the complete inspection history of installed MLG sliding tubes, as described previously. However, the FAA has determined that an inadvertent error in the proposed applicability may have created confusion. The applicability of the proposed AD includes airplanes ''. . . except those on which Airbus Service Bulletin A320–32–1189, dated December 23, 1998, has not been accomplished.'' Since the actions described in Airbus Service Bulletin A320–32–1189 are actually required by this AD, the FAA's intent in the proposed applicability was to exclude airplanes on which all actions described in Service Bulletin A320–32–1189 have been accomplished. Therefore, the FAA has determined that the applicability should have read ''. . . except those on which Airbus Service Bulletin A320–32–1189, dated December 23, 1998, has been accomplished.'' The final rule has been revised accordingly.

Conclusion

After careful review of the available data, including the comments noted above, the FAA has determined that air safety and the public interest require the adoption of the rule with the change described previously. The FAA has determined that this change will neither increase the economic burden on any operator nor increase the scope of the AD.

Cost Impact

The FAA estimates that 179 airplanes of U.S. registry will be affected by this AD.

It will take approximately 1 work hour per airplane to accomplish the required ''Part A'' (repetitive) inspection, at an average labor rate of $60 per work hour. Based on these figures, the cost impact of the ''Part A'' (repetitive) inspection on U.S. operators is estimated to be $10,740, or $60 per airplane, per inspection cycle.

It will take approximately 6 work hours per airplane to accomplish the required ''Part B'' (one-time) inspection, at an average labor rate of $60 per work hour. Based on these figures, the cost impact of the ''Part B'' (one-time) inspection on U.S. operators is estimated to be $64,440, or $360 per airplane.

The cost impact figures discussed above are based on assumptions that no operator has yet accomplished any of the requirements of this AD action, and that no operator would accomplish those actions in the future if this AD were not adopted.

Regulatory Impact

The regulations adopted herein will not have a substantial direct effect on the States, on the relationship between the national Government and the States, or on the distribution of power and responsibilities among the various levels of government. Therefore, it is determined that this final rule does not have federalism implications under Executive Order 13132.

For the reasons discussed above, I certify that this action (1) is not a ''significant regulatory action'' under Executive Order 12866; (2) is not a ''significant rule'' under DOT Regulatory Policies and Procedures (44 FR 11034, February 26, 1979); and (3)

will not have a significant economic impact, positive or negative, on a substantial number of small entities under the criteria of the Regulatory Flexibility Act. A final evaluation has been prepared for this action and it is contained in the Rules Docket. A copy of it may be obtained from the Rules Docket at the location provided under the caption **ADDRESSES**.

List of Subjects in 14 CFR Part 39

Air transportation, Aircraft, Aviation safety, Incorporation by reference, Safety.

Adoption of the Amendment

Accordingly, pursuant to the authority delegated to me by the Administrator, the Federal Aviation Administration amends part 39 of the Federal Aviation Regulations (14 CFR part 39) as follows:

PART 39—AIRWORTHINESS DIRECTIVES

1. The authority citation for part 39 continues to read as follows:

Authority: 49 U.S.C. 106(g), 40113, 44701.

§ 39.13 [Amended]

2. Section 39.13 is amended by adding the following new airworthiness directive:

2000–11–09 Airbus: Amendment 39–11757. Docket 99–NM–343–AD.

Applicability: Model A319, A320, and A321 series airplanes; manufacturer serial numbers through 0875 inclusive; certificated in any category; except those on which Airbus Service Bulletin A320–32–1189, dated December 23, 1998, has been accomplished; and except those on which it can be shown that one of the following conditions has been met (also see NOTE 1):

(1) The main landing gear (MLG) sliding tubes have never been removed from the airplane;

(2) A magnetic particle non-destructive test (NDT2) inspection has never been accomplished on any of the MLG sliding tubes installed on the airplane; or

(3) If an NDT2 inspection has been accomplished on any of the MLG sliding tubes installed on the airplane, it was accomplished only after removal of the attaching hardware and bushings.

Note 1: Operators should note that complete maintenance records for the life of each MLG sliding tube are necessary in order to make a definitive determination of whether any condition specified in the Applicability of the AD has been met.

Note 2: This AD applies to each airplane identified in the preceding applicability provision, regardless of whether it has been otherwise modified, altered, or repaired in the area subject to the requirements of this AD. For airplanes that have been modified, altered, or repaired so that the performance of the requirements of this AD is affected, the owner/operator must request approval for an alternative method of compliance in accordance with paragraph (c) of this AD. The request should include an assessment of the effect of the modification, alteration, or repair on the unsafe condition addressed by this AD; and, if the unsafe condition has not been eliminated, the request should include specific proposed actions to address it.

Compliance: Required as indicated, unless accomplished previously.

To prevent cracking of the sliding tube subassembly of the main landing gear (MLG), which could result in collapse of the MLG, accomplish the following:

Inspections

(a) Within 500 flight hours after the effective date of this AD, perform a detailed visual inspection to detect cracking of the left-hand and right-hand MLG sliding tube subassemblies, in accordance with paragraph 2.B.(1) of the Accomplishment Instructions of Airbus Service Bulletin A320–32–1189, dated December 23, 1998.

(1) If no crack is found, repeat the inspection at intervals not to exceed 500 flight hours, until the requirements of paragraph (b) of this AD have been accomplished.

(2) If any crack is found, prior to further flight, replace the sliding tube subassembly with a new subassembly, in accordance with the service bulletin. Thereafter, repeat the inspection at intervals not to exceed 500 flight hours, until the requirements of paragraph (b) of this AD have been accomplished.

Note 3: For the purposes of this AD, a detailed visual inspection is defined as: ''an intensive visual examination of a specific structural area, system, installation, or assembly to detect damage, failure, or irregularity. Available lighting is normally supplemented with a direct source of good lighting at intensity deemed appropriate by the inspector. Inspection aids such as mirror, magnifying lenses, etc., may be used. Surface cleaning and elaborate access procedures may be required.''

(b) Within 15 months after the effective date of this AD: Remove the jacking dome, the stop washer, the jacking dome bushing, and the harness supports; and perform detailed visual inspections to detect discrepancies (including cracking of the left and right MLG sliding tube subassemblies, and overheat damage of the jacking dome bushing), in accordance with paragraph 2.B.(2) of the Accomplishment Instructions of Airbus Service Bulletin A320–32–1189, dated December 23, 1998. Accomplishment of the requirements of this paragraph constitutes terminating action for the requirements of paragraph (a) of this AD.

(1) If no discrepancy is found, prior to further flight, install a new stop washer and jacking dome bushing, in accordance with the service bulletin. No further action is required by this AD.

(2) If any discrepancy is found, prior to further flight, repair in accordance with a method approved by the Manager, International Branch, ANM–116, FAA, Transport Airplane Directorate; or the Direction Generale de l'Aviation Civile (DGAC) (or its delegated agent). For a repair method to be approved by the Manager, International Branch, ANM–116, as required by this paragraph, the Manager's approval letter must specifically reference this AD.

Alternative Methods of Compliance

(c) An alternative method of compliance or adjustment of the compliance time that provides an acceptable level of safety may be used if approved by the Manager, International Branch, ANM–116. Operators shall submit their requests through an appropriate FAA Principal Maintenance Inspector, who may add comments and then send it to the Manager, International Branch, ANM–116.

Note 4: Information concerning the existence of approved alternative methods of compliance with this AD, if any, may be obtained from the International Branch, ANM–116.

Special Flight Permits

(d) Special flight permits may be issued in accordance with sections 21.197 and 21.199 of the Federal Aviation Regulations (14 CFR 21.197 and 21.199) to operate the airplane to a location where the requirements of this AD can be accomplished.

Incorporation by Reference

(e) Except as required by paragraph (b)(2), the actions shall be done in accordance with Airbus Service Bulletin A320–32–1189, dated December 23, 1998. This incorporation by reference was approved by the Director of the Federal Register in accordance with 5 U.S.C. 552(a) and 1 CFR part 51. Copies may be obtained from Airbus Industrie, 1 Rond Point Maurice Bellonte, 31707 Blagnac Cedex, France. Copies may be inspected at the FAA, Transport Airplane Directorate, 1601 Lind Avenue, SW., Renton, Washington; or at the Office of the Federal Register, 800 North Capitol Street, NW., suite 700, Washington, DC.

Note 5: The subject of this AD is addressed in French airworthiness directive 1999–358–137(B) R1, dated October 20, 1999.

(f) This amendment becomes effective on July 6, 2000.

Issued in Renton, Washington, on May 23, 2000.

Donald L. Riggin,

Acting Manager, Transport Airplane Directorate, Aircraft Certification Service.

[FR Doc. 00–13446 Filed 5–31–00; 8:45 am]

BILLING CODE 4910–13–U

DEPARTMENT OF TRANSPORTATION

Federal Aviation Administration

14 CFR Part 39

[Docket No. 99–CE–81–AD; Amendment 39–11752; AD 2000–11–04]

RIN 2120–AA64

Airworthiness Directives; Commander Aircraft Company Model 114TC Airplanes

AGENCY: Federal Aviation Administration, DOT.

ACTION: Final rule; request for comments.

SUMMARY: This amendment adopts a new airworthiness directive (AD) that applies to certain Commander Aircraft Company (Commander) Model 114TC airplanes. This AD requires you to replace the existing Aeroquip V-band exhaust clamp with a new clamp of improved design. This AD is the result of reports of this clamp failing on 4 of the affected airplanes. This clamp attaches the exhaust stack to the turbocharger. The actions specified in this AD are intended to prevent the exhaust stack from detaching from the turbocharger due to failure of the V-band exhaust clamp. This could result in the release of high temperature gases inside the engine compartment with a consequent airplane cabin fire.

DATES: This AD becomes effective on June 23, 2000.

The Director of the Federal Register approved the incorporation by reference of certain publications listed in the regulation as of June 23, 2000.

The Federal Aviation Administration (FAA) must receive any comments on this rule on or before July 28, 2000.

ADDRESSES: Submit comments in triplicate to FAA, Central Region, Office of the Regional Counsel, Attention: Rules Docket No. 99–CE–81–AD, 901 Locust, Room 506, Kansas City, Missouri 64106.

You may get the service information referenced in this AD from the Commander Aircraft Company, Wiley Post Airport Hangar 8, 7200 NW 63rd Street, Bethany, Oklahoma 73008; telephone: (405) 495–8080; facsimile: (405) 495–8383. You may examine this information at FAA, Central Region, Office of the Regional Counsel, Attention: Rules Docket No. 99–CE–81–AD, 901 Locust, Room 506, Kansas City, Missouri 64106; or at the Office of the Federal Register, 800 North Capitol Street, NW, suite 700, Washington, DC.

FOR FURTHER INFORMATION CONTACT: Alma Ramirez-Hodge, Aerospace Engineer, Airplane Certification Office, FAA, 2601 Meacham Boulevard, Fort Worth, Texas 76137; telephone: (817) 222–5147; facsimile: (817) 222–5960.

SUPPLEMENTARY INFORMATION:

Discussion

What events have caused this AD? The FAA has received four reports of failure of the Aeroquip V-band exhaust clamp (Aeroquip part number 00624–55677–340M or Lycoming alternate part number 40D21162–340M) on Commander Aircraft Company Model 114TC airplanes. The V-band exhaust clamp attaches the exhaust stack to the turbocharger.

What are the consequences if the condition is not corrected? The exhaust stack detaching from the turbocharger could result in the release of high temperature gases inside the engine compartment with a consequent airplane cabin fire.

Relevant Service Information

Is there service information that applies to this subject? Commander Aircraft Company has issued Service Bulletin No. SB–114–33A, dated May 9, 2000.

What are the provisions of this service bulletin? The service bulletin includes procedures for replacing the Aeroquip V-band exhaust clamp (Aeroquip part number 00624–55677–340M or Lycoming alternate part number 40D21162–340M) with a part of improved design (Aeroquip part number NH1009399–10).

The FAA's Determination and an Explanation of the Provisions of the AD

What has FAA decided? After examining the circumstances and reviewing all available information related to the incidents described above, including the relevant service information, FAA has determined that:

—The above-referenced unsafe condition exists or could develop on other Commander Model 114TC airplanes of the same type design;

—The actions specified in the previously-referenced service information should be accomplished on the affected airplanes; and

—AD action should be taken in order to prevent the exhaust stack from detaching from the turbocharger due to failure of the V-band exhaust clamp. This could result in the release of high temperature gases inside the engine compartment with a consequent airplane cabin fire.

What does this AD require? This AD requires you to accomplish the actions in Commander Aircraft Company Service Bulletin No. SB–114–33A, dated May 9, 2000.

Will I have the opportunity to comment prior to the issuance of the rule? Because the unsafe condition described in this document could result in the release of high temperature gases inside the engine compartment, FAA finds that notice and opportunity for public prior comment are impracticable. Therefore, good cause exists for making this amendment effective in less than 30 days.

Comments Invited

Although this action is in the form of a final rule and was not preceded by notice and opportunity for public comment, FAA invites comments on this rule. You may submit whatever written data, views, or arguments you choose. You need to include the rule's docket number and submit your comments in triplicate to the address specified under the caption **ADDRESSES.** The FAA will consider all comments received on or before the closing date. We may amend this rule in light of comments received. Factual information that supports your ideas and suggestions is extremely helpful in evaluating the effectiveness of the AD action and determining whether we need to take additional rulemaking action.

The FAA is re-examining the writing style we currently use in regulatory documents, in response to the Presidential memorandum of June 1, 1998. That memorandum requires federal agencies to communicate more clearly with the public. We are interested in your comments on whether the style of this document is clearer, and any other suggestions you might have to improve the clarity of FAA communications that affect you. You can get more information about the Presidential memorandum and the plain language initiative at http://www.plainlanguage.gov.

The FAA specifically invites comments on the overall regulatory, economic, environmental, and energy aspects of the rule that might suggest a need to modify the rule. You may examine all comments we receive before and after the closing date of the rule in the Rules Docket. We will file a report in the Rules Docket that summarizes each FAA contact with the public that concerns the substantive parts of this AD.

If you want us to acknowledge the receipt of your comments, you must include a self-addressed, stamped postcard. On the postcard, write ''Comments to Docket No. 99–CE–81–AD.'' We will date stamp and mail the postcard back to you.

Regulatory Impact

These regulations will not have a substantial direct effect on the States, on the relationship between the national Government and the States, or on the distribution of power and responsibilities among the various levels of government. Therefore, FAA has determined that this final rule does not have federalism implications under Executive Order 13132.

The FAA has determined that this regulation is an emergency regulation that must be issued immediately to correct an unsafe condition in aircraft, and is not a significant regulatory action under Executive Order 12866. It has been determined further that this action involves an emergency regulation under DOT Regulatory Policies and Procedures (44 FR 11034, February 26, 1979). If it is determined that this emergency regulation otherwise would be significant under DOT Regulatory Policies and Procedures, a final regulatory evaluation will be prepared and placed in the Rules Docket (otherwise, an evaluation is not required). A copy of it, if filed, may be obtained from the Rules Docket.

List of Subjects in 14 CFR Part 39

Air transportation, Aircraft, Aviation safety, Incorporation by reference, Safety.

Adoption of the Amendment

Accordingly, under the authority delegated to me by the Administrator, the Federal Aviation Administration amends part 39 of the Federal Aviation Regulations (14 CFR part 39) as follows:

PART 39—AIRWORTHINESS DIRECTIVES

1. The authority citation for part 39 continues to read as follows:

Authority: 49 U.S.C. 106(g), 40113, 44701.

§ 39.13 [Amended]

2. FAA amends Section 39.13 by adding a new airworthiness directive (AD) to read as follows:

2000–11–04 Commander Aircraft Company: Amendment 39–11752; Docket No. 99–CE–81–AD.

(a) *What airplanes are affected by this AD?* Model 114TC airplanes, serial numbers 20001 through 20027, certificated in any category.

(b) *Who must comply with this AD?* Anyone who wishes to operate any of the above airplanes on the U.S. Register must comply with this AD.

(c) *What problem does this AD address?* The actions required by this AD are intended to prevent the exhaust stack from detaching from the turbocharger due to failure of the V-band exhaust clamp. This could result in the release of high temperature gases inside the engine compartment with a consequent airplane cabin fire.

(d) *What actions must I accomplish to address this problem?* To address this problem, you must accomplish the following:

Action	Compliance time	Procedures
(1) Replace the Aeroquip V-band exhaust clamp (Aeroquip part number 00624–55677–340M or Lycoming alternate part number 40D21162–340M) with a part of improved design (Aeroquip part number NH1009399-10).	Accomplish this action within the next 25 hours time-in-service after June 23, 2000 (the effective date of this AD.	Perform this action in accordance with the ACCOMPLISHMENT INSTRUCTIONS section of commander Aircraft Company Service Bulletin No. SB–114–33A, dated May 9, 2000.
(2) Do NOT install an Aeroquip V-band exhaust clamp (Aeroquip part number 00624–55677–340M or Lycoming alternate part number 40D21162–340M) on any affected airplane.	As of June 23, 2000 (the effective date of this AD).	Not applicable.

(e) *Can I comply with this AD in any other way?* You may use an alternative method of compliance or adjust the compliance time if:

(1) Your alternative method of compliance provides an equivalent level of safety; and

(2) The Manager, Fort Worth Airplane Certification Office, approves your alternative. Submit your request through an FAA Principal Maintenance Inspector, who may add comments and then send it to the Manager.

Note: This AD applies to each airplane identified in paragraph (a) of this AD, regardless of whether it has been modified, altered, or repaired in the area subject to the requirements of this AD. For airplanes that have been modified, altered, or repaired so that the performance of the requirements of this AD is affected, the owner/operator must request approval for an alternative method of compliance in accordance with paragraph (e) of this AD. The request should include an assessment of the effect of the modification, alteration, or repair on the unsafe condition addressed by this AD; and, if you have not eliminated the unsafe condition, specific actions you propose to address it.

(f) *Where can I get information about any already-approved alternative methods of compliance?* Contact the Fort Worth Airplane Certification Office, 2601 Meacham Boulevard, Fort Worth, Texas 76193–0150; telephone: (817) 222–5147; facsimile: (817) 222–5960.

(g) *What if I need to fly the airplane to another location to comply with this AD?* The FAA can issue a special flight permit under sections 21.197 and 21.199 of the Federal Aviation Regulations (14 CFR 21.197 and 21.199) to operate your airplane to a location where you can accomplish the requirements of this AD.

(h) *Are any service bulletins incorporated into this AD by reference?* Actions required by this AD must be done in accordance with Commander Aircraft Company Service Bulletin No. SB–114–33A, dated May 9, 2000. The Director of the Federal Register approved this incorporation by reference under 5 U.S.C. 552(a) and 1 CFR part 51. You may get copies from the Commander Aircraft Company, Wiley Post Airport Hangar 8, 7200 NW 63rd Street, Bethany, Oklahoma 73008. You may look at copies at FAA, Central Region, Office of the Regional Counsel, 901 Locust, Room 506, Kansas City, Missouri, or at the Office of the Federal Register, 800 North Capitol Street, NW, suite 700, Washington, DC.

(i) *When does this amendment become effective?* This amendment becomes effective on June 23, 2000.

Issued in Kansas City, Missouri, on May 22, 2000.

Marvin R. Nuss,

Acting Manager, Small Airplane Directorate, Aircraft Certification Service.

[FR Doc. 00–13444 Filed 5–31–00; 8:45 am]

BILLING CODE 4910–13–P

DEPARTMENT OF COMMERCE

Bureau of Export Administration

15 CFR Part 760

[Docket No. 000424111–0111–01]

RIN 0694–AA11

Restrictive Trade Practices or Boycotts

AGENCY: Bureau of Export Administration, Commerce.

ACTION: Final rule.

SUMMARY: The Bureau of Export Administration is amending the Export Administration Regulations (EAR) to make certain editorial revisions and

clarifications to the antiboycott provisions of the EAR.

DATES: This rule is effective June 1, 2000.

FOR FURTHER INFORMATION CONTACT: Robert A. Diamond, Director, Compliance Policy Division, Office of Antiboycott Compliance, Bureau of Export Administration, Telephone: (202) 482–2381.

SUPPLEMENTARY INFORMATION: The Bureau of Export Administration's (BXA) Office of Antiboycott Compliance is responsible for the enforcement of the antiboycott provisions of the Export Administration Act (the Act), as amended. The Act encourages, and in some cases requires, U.S. persons to refuse to participate in foreign boycotts that the United States does not sanction. U.S. persons are also required to report receipt of boycott-related requests. The antiboycott provisions of the Act are implemented in part 760 of the Export Administration Regulations (EAR). Examples accompany the text of the regulations to aid in their interpretation.

The antiboycott provisions of the EAR became effective on January 18, 1978 and provided for a six-month grace period ending June 21, 1978, when enforcement of certain of the sections of the regulations commenced. The purpose of the delayed effective date, which was provided by Section 4A(a)(2)(B) of the Export Administration Act of 1977, as amended, was to allow the regulated public time to adjust their practices to the new regulations.

This rule removes all references to the 1978 grace period, including deletions of language in the text of the regulations and the interpretative examples that no longer apply. In some cases, new text has been added to preserve the substantive meaning of the regulation or example. The rule also removes the phrase ''effective date of this part'' and replaces it with the January 18, 1978 date of publication of the original rule. In addition, this rule corrects paragraph references, particularly in the interpretative Supplements. It also provides clarifying language in instances where the original text was unclear, as well as making typographical corrections, as appropriate.

This rule also addresses issues raised by a proposed rule published by the Department on September 26, 1989 (54 FR 39415). The proposed rule contained revisions and clarifications to the antiboycott provisions of the EAR that, at the time, the Department found ''[were] still debated or confusing.''

Since 1989, the Department has had an additional ten years of experience in implementing the antiboycott provisions of the EAR and has concluded that some of the changes proposed in 1989 rule remain useful. These have been incorporated into the final rule. In some cases, proposed changes are incorporated with additional revisions or clarifying language as appropriate. Other proposed changes addressed issues which the Department no longer considers ''debated or confusing'' and have not been adopted in the final rule.

The 1989 Proposed Rule addressed the following issues:

(1) The intent provision to the reporting requirement;

(2) The jurisdictional requirements relating to the implementation of letters of credit;

(3) The furnishing information prohibitions about the nationality of directors and blacklisted persons;

(4) The shipping requirement exception to refusals to use blacklisted vessels; and

(5) The import and shipping document exception to information about the nationality of carriers and residence of manufacturers or suppliers.

At the end of the 30-day comment period, three comments were received. Two additional comments were received after the comment period closed. All five comments were taken into account in developing this final rule. Having reviewed the comments received on this proposed rule, BXA is now issuing this rule in final form.

Readers should note that part 769 was redesignated as part 760 on March 25, 1996. All comments were received prior to that date refer to part 769. Accordingly, in the following discussion, all references by commenters to part 769 have been changed to part 760 and its corresponding sections.

The Intent Provision to the Reporting Requirement

One commenter contended that the two proposed changes to the intent provisions fail to clarify the applicable standards of intent. The Department's proposal removed example (ix) and the accompanying Note following example (x) to § 760.1(e). The commenter believed that elimination of this example would expand the scope of the prohibitions, because the example is an illustration of situations where the prohibitions of § 760.2(d) may not apply because either there is no intent to violate the regulations, or the information supplied is of a type generally used for a legitimate business purpose.

Example (ix) would permit U.S. company A to furnish information ''demonstrat[ing] that A does at least as much business in [boycotting country] Y and other countries engaged in a boycott of [boycotted country X] as it does in X.'' By furnishing this information relating to country X, A would be violating § 760.2(d)(1) which prohibits a U.S. person from furnishing information concerning ''his . . . past, present or proposed business relationships . . . with or in a boycotted country. . . .'' By stating that A could furnish this information, the example can lead to unnecessary confusion concerning the meaning of the intent requirement. The commenter's suggestion was not adopted, and example (ix) and the accompanying Note following example (x) were deleted.

The commenter also contended that the Department's proposed revision to § 760.1(e)(3), which would remove the intent as an element of the reporting requirement, implied that a failure to comply with the reporting requirements would be a strict liability offense.

The intent requirement is set forth in section 8(a) of the Export Administration Act (Act). The obligation to report, however, arises from section 8(b)(2). In addition, § 760.1(e)(3) of the regulations was adopted when part 760 included only the prohibitions in § 760.2. When the reporting requirements in § 760.5 were later revised to reflect the requirements of the 1977 amendments to the Export Administration Act, the language of § 760.1(e)(3) was apparently overlooked and not changed. The proposed rule would revise the general statement in paragraph (e)(3) to make it clear that intent is an element only of a violation of the prohibitions set forth in § 760.2 of the regulations.

Furthermore, § 760.5(a)(2) provides that requests are reportable if the U.S. person ''knows or has reason to know'' that the purpose of the request is to further a boycott or restrictive trade practice. Thus, it is clear that failure to report is not a strict liability violation, and the proposed rule is adopted by incorporating the change proposed to be made in § 760.1(e)(3).

Jurisdictional Requirements Relating to the Implementation of Letters of Credit

One commenter opposed the proposed revision of § 760.1(d)(20), which replaced the language ''by this part'' with the phrase ''by the prohibition of § 760.2(f).'' The commenter contended that the effect of this revision would be to subject the implementation of letters of credit to the other prohibitions contained in part

760, not only to the prohibition of § 760.2(f), which specifically addresses the implementation of letters of credit. The final rule makes no change to § 760.1(d)(20) because the Department has concluded that the issue is no longer debated or confusing.

One commenter suggested that an additional example be included in the regulations concerning a contract with a form of a letter of credit that contains a number of preprinted provisions. These provisions would include a stipulation that documents covering goods of Israeli origin are not acceptable. However, the letter of credit would simultaneously contain a provision imposing the requirement that the documents must certify that the goods are 100 percent of U.S. origin. This additional example was not adopted because the Department believes it is not of general interest.

Furnishing Information About the Nationality of Directors and About Blacklisted Persons

The proposed rule would have changed example (vii) to § 760.2(c), relating to Furnishing Information about Race, Religion, Sex or National Origin. The proposed revision stated that furnishing permissible information about the nationalities of directors or corporate officers would not violate § 760.2(c) but ''would violate § 760.2(d)—the prohibition on furnishing information about business relationships.'' Two commenters pointed out that the proposed revision to example (vii) is in conflict with other provisions of the regulations and with the Act's legislative history.

One of the two commenters further contended that furnishing information on the nationality of officers, directors, or employees should be presumed to be normal commercial information sought for legitimate business purposes, unless there are reasons or facts available to the exporter indicating otherwise. Information sought about an employment relationship should not be considered to be information about a business relationship as that term is commonly understood.

The final rule makes no change to example (vii) because the Department has concluded after ten years of additional experience that furnishing information concerning nationalities of officers, directors, or employees has not been confused with violations of § 760.2(d), furnishing information about business relationships.

The Shipping Requirement Exception to Refusals To Use Blacklisted Vessels

The proposed rule added example (vi) to § 760.3(b) relating to Examples of Compliance with the Shipping Requirements of a Boycotting Country. The Department received no comments on example (vi), and the final rule adopts this example.

Import and Shipping Document Exception to Information About the Nationality of Carriers and Residence of Manufacturers or Suppliers

The proposed rule revised subparagraphs (ii), (iv), and (v) of the text of § 760.3(c)(1) by adding a reference to the ''nationality'' of the carrier, and a reference to the ''residence'' of the supplier of the shipment and the provider of other services, with respect to compliance with import and shipping document requirements. No comments were received on these revisions. The final rule adopts the proposed revision to subparagraph (ii), and adds the word ''address'' to subparagraphs (iv) and (v). The Department believes that ''address'' is a more commonly used term than ''residence'' in import and shipping documents.

One commenter suggested that § 760.3(c)(2) be revised to provide that not only the names, but the nationalities, ''of carriers or routes of shipments'' may be stated ''in negative terms in conjunction with shipments to a boycotting country. . . .'' The final rule adopts this suggestion. The Department has long taken the position that furnishing information about the nationality of a carrier may be supplied in negative terms. This information relates to requirements protecting against war risks or confiscation.

Although the Export Administration Act (EAA) expired on August 20, 1994, the President invoked the International Emergency Economic Powers Act and continued in effect the EAR, and to the extent permitted by law, the provisions of the EAA, as amended, in Executive Order 12924 of August 19, 1994, as extended by the President's notices of August 15, 1995 (60 FR 42767), August 14, 1996 (61 FR 42527), August 13, 1997 (62 FR 43629), August 13, 1998 (63 FR 44121) and August 13, 1999 (64 FR 44101).

Rule Making Requirements

1. This final rule has been determined to be not significant for purposes of E.O. 12866.

2. Notwithstanding any other provision of law, no person is required to respond to nor be subject to a penalty for failure to comply with a collection of information, subject to the requirements of the Paperwork Reduction Act, unless that collection of information displays a current valid OMB Control Number. This rule involves collection of information subject to the Paperwork Reduction Act of 1980 (44 U.S.C. 3501 *et seq.*). This collection has been approved by the Office of Management and Budget under control number 0694–0012. There are neither additions nor subtractions to this collection due to this rule.

3. This rule does not contain policies with Federalism implications sufficient to warrant preparation of a Federalism assessment under Executive Order 13132.

4. The provisions of the Administrative Procedure Act (5 U.S.C. 553) requiring notice of proposed rulemaking, the opportunity for public participation, and a delay in effective date, are inapplicable because this regulation involves a military and foreign affairs function of the United States (5 U.S.C. 553(a)(1)). Further, no other law requires that a notice of proposed rulemaking and an opportunity for public comment be given for this final rule. Because a notice of proposed rulemaking and an opportunity for public comment are not required to be given for this rule under the Administrative Procedure Act or by any other law, the analytical requirements of the Regulatory Flexibility Act (5 U.S.C. 601 *et seq.*) are not applicable. Therefore, this regulation is issued in final form. Although there is no formal comment period, public comments on this regulation are welcome on a continuing basis. Comments should be submitted to Kirsten Mortimer, Office of Exporter Services, Bureau of Export Administration, Department of Commerce, P.O. Box 273, Washington, D.C. 20044.

List of Subjects in 15 CFR Part 760

Boycotts, Exports, Foreign trade, Reporting and recordkeeping requirements.

Accordingly, part 760 of the Export Administration Regulations (15 CFR Parts 730 through 799) is amended as follows:

1. The authority citation for 15 CFR Part 760 is revised to read as follows:

Authority: 50 U.S.C. app. 2401 *et seq.*; 50 U.S.C. 1701 *et seq.*; E.O. 12924, 59 FR 43437, 3 CFR, 1994 Comp., p. 917; Notice of August 10, 1999, 64 FR 44101, 3 CFR, 1999 Comp., p. 302.

PART 760—[AMENDED]

§ 760.1 [Amended]

2. Section 760.1 is amended:

a. By revising the phrase ''of any violation of this part'' to read ''of any violation of any of the prohibitions under § 760.2 '' in paragraph (e)(3);

b. By removing example (ix) and the Note that follows example (x) in paragraph (e)(7) under the heading ''Examples of 'Intent' '';

c. By redesignating example (x) as example (ix) in paragraph (e)(7) under the heading ''Examples of 'Intent' ''; and

d. By revising the phrase ''would betaken'' to read ''would be taken'' in the newly designated example (ix) in paragraph (e)(7) under the heading ''Examples of 'Intent' ''.

3. Section 760.2 is amended:

a. By revising the phrase ''see § 760.3(c) of this part'' to read ''see § 760.3(d)'' in paragraph (a)(7);

b. By revising examples (xii), (xviii), and (xxi) in paragraph (a)(10) under the heading ''Refusals To Do Business'';

c. By revising examples (ii), (v), and (vi) in paragraph (a)(10) under the heading ''Agreements To Refuse To Do Business'';

d. By revising example (xviii) in paragraph (d)(5) under the heading ''Examples Concerning Furnishing of Information'';

e. By revising example (v) in paragraph (f)(10) under the heading ''Implementation of Letters of Credit in United States Commerce''; and

f. By revising examples (iv), (vi), and (x), and removing and reserving example (vii), in paragraph (f)(10) under the heading ''Prohibition Against Implementing Letters of Credit'', as follows:

§ 760.2 Prohibitions.

(a) * * *

(10) * * *

Refusals To Do Business

* * * * *

(xii) Company A, a U.S. oil company, purchases drill bits from U.S. suppliers for export to boycotting country Y. In its purchase orders, A includes a provision requiring the supplier to make delivery to A's facilities in Y and providing that title to the goods does not pass until delivery has been made. As is customary under such an arrangement, the supplier bears all risks of loss, including loss from fire, theft, perils of the sea, and inability to clear customs, until title passes.

Insistence on such an arrangement does not constitute a refusal to do business, because this requirement is imposed on all suppliers whether they are blacklisted or not. (But see § 760.4 on ''Evasion''.)

* * * * *

(xviii) A, a U.S. engineering firm under contract to construct a dam in boycotting country Y, compiles, on a non-boycott basis, a list of potential heavy equipment suppliers, including information on their qualifications and prior experience. A then solicits bids from the top three firms on its list—B, C, and D—because they are the best qualified. None of them happens to be blacklisted. A does not solicit bids from E, F, or G, the next three firms on the list, one of whom is on Y's blacklist.

A's decision to solicit bids from only B, C, and D, is not a refusal to do business with any person, because the solicited bidders were not selected for boycott reasons.

* * * * *

(xxi) U.S. bank A receives a letter of credit from a bank in boycotting country Y in favor of U.S. beneficiary B. The letter of credit requires B to provide a certification from the steamship line that the vessel carrying the goods is eligible to enter the ports in Y. B seeks payment from A and meets all other conditions of the letter of credit. A refuses to pay B solely because B cannot or will not provide the certification.

A has neither refused, nor required another person to refuse, to do business with another person pursuant to a boycott requirement or request because a request for a vessel eligibility certificate to be furnished by the steamship line is not a prohibited condition. (See Supplement No. 1 to this part, paragraph (I)(B), ''Shipping Certificate''.)

* * * * *

Agreements To Refuse To Do Business

* * * * *

(ii) A, a U.S. manufacturer of commercial refrigerators and freezers, receives an invitation to bid from boycotting country Y. The tender states that the bidder must agree not to deal with companies on Y's blacklist. A does not know which companies are on the blacklist; however, A submits a bid without taking exception to the boycott conditions. A's bid makes no commitment regarding not dealing with certain companies.

At the point when A submits its bid without taking exception to the boycott request in Y's tender, A has agreed to refuse to do business with blacklisted persons, because the terms of Y's tender require A to agree to refuse to do business.

* * * * *

(v) Same as (iv), except that the contract contains a clause that A and its employees will comply with the laws of boycotting country Y, ''including boycott laws.''

A's agreeing, without qualification, to comply with local boycott laws constitutes an agreement to refuse to do business.

(vi) Same as (v), except that A inserts a proviso ''except insofar as Y's laws conflict with U.S. laws,'' or words to that effect.

Such an agreement is not an agreement to refuse to do business.

* * * * *

(d) * * *

(5) * * *

Examples Concerning Furnishing of Information

* * * * *

(xviii) U.S. company A is asked by boycotting country Y to certify that it is not the mother company, sister company, subsidiary, or branch of any blacklisted company, and that it is not in any way affiliated with any blacklisted company.

A may not furnish the certification, because it is information about whether A has a business relationship with another person who is known or believed to be restricted from having any business relationship with or in a boycotting country.

* * * * *

(f) * * *

(10) * * *

Implementation of Letters of Credit in United States Commerce

* * * * *

(v) A, a U.S. bank branch located outside the United States, opens a letter of credit which specifies a beneficiary with a U.S. address. The letter of credit calls for documents indicating shipment of foreign-origin goods.

The letter of credit is presumed to be in favor of a U.S. beneficiary but to apply to a transaction outside U.S. commerce, because it calls for documents indicating shipment of foreign-origin goods. The presumption of non-U.S. commerce may be rebutted by facts showing that A could reasonably conclude that the underlying transaction involves shipment of U.S.-origin goods or goods from the United States.

* * * * *

Prohibition Against Implementing Letters of Credit

* * * * *

(iv) Same as (iii), except that U.S. company B, based in part on

information received from U.S. bank A, desires to obtain an amendment to the letter of credit which would eliminate or nullify the language in the letter of credit which prevents A from paying or otherwise implementing it.

Either company B or bank A may undertake, and the other may cooperate and assist in, this endeavor. A could then pay or otherwise implement the revised letter of credit, so long as the original prohibited boycott condition is of no force or effect.

* * * * *

(vi) Boycotting country Y orders goods from U.S. company B. U.S. bank A is asked to implement, for the benefit of B, a letter of credit which contains a clause requiring documentation that the goods shipped are not of boycotted country X origin.

A may not implement the letter of credit with a prohibited condition, and may accept only a positive certificate of origin as satisfactory documentation. (See § 760.3(c) on ''Import and Shipping Document Requirements.'')

(vii) [Reserved]

* * * * *

(x) Boycotting country Y orders goods from U.S. exporter B and requests a foreign bank in Y to open a letter of credit in favor of B to cover the cost. The letter of credit contains a prohibited boycott clause. The foreign bank asks U.S. bank A to advise and confirm the letter of credit. Through inadvertence, A does not notice the prohibited clause and confirms the letter of credit. A thereafter notices the clause and then refuses to honor B's draft against the letter of credit. B sues bank A for payment.

A has an absolute defense against the obligation to make payment under this letter of credit. (Note: Examples (ix) and (x) do not alter any other obligations or liabilities of the parties under appropriate law.)

* * * * *

4. Section 760.3 is amended:

a. By revising examples (i), (ii), and (iii) in paragraph (a)(3) under the heading ''Examples of Compliance with Import Requirements of a Boycotting Country'';

b. By adding example (vi) in paragraph (b)(3) under the heading ''Examples of Compliance with the Shipping Requirements of a Boycotting Country'';

c. By revising paragraphs (c)(1)(ii), (iv) and (v);

d. By revising paragraph (c)(2) introductory text;

e. By revising examples (i), (iv), (v), and (vi), and by removing and reserving example (iii), and removing example (xiii), in paragraph (c)(2) under the heading ''Examples of Compliance With Import and Shipping Document Requirements'';

f. By revising paragraph heading (d) and paragraph (d)(1);

g. By revising the last example heading ''Examples of Discrimination on Basis of Race, Religion, Sex or National Origin'' in paragraph (d)(18) to read ''Example of Discrimination on Basis of Race, Religion, Sex or National Origin'';

h. By revising example (vii) in paragraph (f)(4) under the heading ''Examples of Compliance With Immigration, Passport, Visa, or Employment Requirements of a Boycotting Country'';

i. By revising examples (iv) and (vi) in paragraph (g)(3) under the heading ''Examples of Bona Fide Residency'';

j. By revising paragraph (i)(4);

k. By revising the example heading ''Imports for U.S. Person's Own Use'' in paragraph (i)(10) to read ''Imports for U.S. Person's Own Use Within Boycotting Country''; and

l. By removing the example heading ''For Use Within Boycotting Country'' in paragraph (i)(10) and by designating the example following this newly removed heading as (xii), as follows:

§ 760.3 Exceptions to prohibitions.

(a) * * *

(3) * * *

Examples of Compliance With Import Requirements of a Boycotting Country

(i) A, a U.S. manufacturer, receives an order from boycotting country Y for its products. Country X is boycotted by country Y, and the import laws of Y prohibit the importation of goods produced or manufactured in X. In filling this type of order, A would usually include some component parts produced in X.

For the purpose of filling this order, A may substitute comparable component parts in place of parts produced in X, because the import laws of Y prohibit the importation of goods manufactured in X.

(ii) Same as (i), except that A's contract with Y expressly provides that in fulfilling the contract A ''may not include parts or components produced or manufactured in boycotted country X.''

A may agree to and comply with this contract provision, because Y prohibits the importation of goods from X. However, A may not furnish negative certifications regarding the origin of components in response to import and shipping document requirements.

(iii) A, a U.S. building contractor, is awarded a contract to construct a plant in boycotting country Y. A accepts bids on goods required under the contract, and the lowest bid is made by B, a business concern organized under the laws of X, a country boycotted by Y. Y prohibits the import of goods produced by companies organized under the laws of X.

For purposes of this contract, A may reject B's bid and accept another, because B's goods would be refused entry into Y because of Y's boycott against X.

* * * * *

(b) * * *

(3) * * *

Examples of Compliance With the Shipping Requirements of a Boycotting Country

* * * * *

(vi) Boycotting country Y orders goods from A, a U.S. manufacturer. The order specifies that goods shipped by A ''must not be shipped on vessels blacklisted by country Y''.

A may not agree to comply with this condition because it is not a restriction limited to the use of carriers of the boycotted country.

(c) * * *

(1) * * *

(ii) The name and nationality of the carrier;

(iii) * * *

(iv) The name, residence, or address of the supplier of the shipment;

(v) The name, residence, or address of the provider of other services.

(2) Such information must be stated in positive, non-blacklisting, non-exclusionary terms except for information with respect to the names or nationalities of carriers or routes of shipment, which may continue to be stated in negative terms in conjunction with shipments to a boycotting country, in order to comply with precautionary requirements protecting against war risks or confiscation.

Examples of Compliance With Import and Shipping Document Requirements

(i) Boycotting country Y contracts with A, a U.S. petroleum equipment manufacturer, for certain equipment. Y requires that goods being imported into Y must be accompanied by a certification that the goods being supplied did not originate in boycotted country X.

A may not supply such a certification in negative terms but may identify instead the country of origin of the goods in positive terms only.

* * * * *

(iii) [Reserved]

(iv) A, a U.S. apparel manufacturer, has contracted to sell certain of its

products to B, a national of boycotting country Y. The form that must be submitted to customs officials of Y requires the shipper to certify that the goods contained in the shipment have not been supplied by ''blacklisted'' persons.

A may not furnish the information in negative terms but may certify, in positive terms only, the name of the supplier of the goods.

(v) Same as (iv), except the customs form requires certification that the insurer and freight forwarder used are not ''blacklisted.''

A may not comply with the request but may supply a certification stating, in positive terms only, the names of the insurer and freight forwarder.

(vi) A, a U.S. petrochemical manufacturer, executes a sales contract with B, a resident of boycotting country Y. A provision of A's contract with B requires that the bill of lading and other shipping documents contain certifications that the goods have not been shipped on a ''blacklisted'' carrier.

A may not agree to supply a certification that the carrier is not ''blacklisted'' but may certify the name of the carrier in positive terms only.

* * * * *

(d) *Unilateral and specific selection.*

Compliance with Unilateral and Specific Selection

(1) A United States person may comply or agree to comply in the normal course of business with the unilateral and specific selection by a boycotting country, a national of a boycotting country, or a resident of a boycotting country (including a United States person who is a bona fide resident of a boycotting country) of carriers, insurers, suppliers of services to be performed within the boycotting country, or specific goods, provided that with respect to services, it is necessary and customary that a not insignificant part of the services be performed within the boycotting country. With respect to goods, the items, in the normal course of business, must be identifiable as to their source or origin at the time of their entry into the boycotting country by (a) uniqueness of design or appearance or (b) trademark, trade name, or other identification normally on the items themselves, including their packaging.

* * * * *

(f) * * *

(4) * * *

(vii) A, a U.S. contractor, selects U.S. subcontractor B to perform certain engineering services in connection with A's project in boycotting country Y. The work visa application submitted by the employee whom B has proposed as chief engineer of this project is rejected by Y because his national origin is of boycotted country X. Subcontractor B thereupon withdraws.

A may continue with the project and select another subcontractor, because A is not acting in contravention of any prohibition of this part.

(g) * * *

(3) * * *

Examples of Bona Fide Residency

* * * * *

(iv) Same as (iii), except A's personnel are required by Y's laws to furnish certain non-discriminatory boycott information in order to establish a branch in Y.

In these limited circumstances, A's personnel may furnish the non-discriminatory boycott information necessary to establish residency to the same extent a U.S. person who is a bona fide resident in that country could. If this information could not be furnished in such limited circumstances, the exception would be available only to firms resident in a boycotting country before January 18, 1978.

* * * * *

(vi) Same as (v), except that A is considering establishing an office in boycotting country Y. A's personnel visit Y in order to register A to do business in that country. A intends to establish ongoing construction operations in Y. A's personnel are required by Y's laws to furnish certain non-discriminatory boycott information in order to register A to do business or incorporate a subsidiary in Y.

In these limited circumstances, A's personnel may furnish non-discriminatory boycott information necessary to establish residency to the same extent a U.S. person who is a bona fide resident in that country could. If this information could not be furnished in such limited circumstances, the exception would be available only to firms resident in a boycotting country before January 18, 1978.

* * * * *

(i) * * *

(4) For purposes of this exception, the test that governs whether goods or components of goods are specifically identifiable is identical to the test applied in paragraph (d) of this section on ''Compliance With Unilateral and Specific Selection'' to determine whether they are identifiable as to their source or origin in the normal course of business.

* * * * *

5. Section 760.4 is amended:

a. By revising the phrase ''§ 760.3(a) through (g) of this part'' to read ''§ 760.3(a) through (i)'' in paragraph (b);

b. By revising the phrase ''January 21, 1978'' to read ''January 18, 1978'' in paragraph (d); and

c. By revising examples (iii), (iv), (x), (xi), (xii), (xv), and (xvi) in paragraph (e) under the heading ''Examples'', as follows:

§ 760.4 Evasion.

* * * * *

(e) * * *

Examples

* * * * *

(iii) A, a U.S. company, has been selling sewing machines to boycotting country Y for a number of years. A receives a request for a negative certificate of origin from a new customer. A is aware that furnishing such certificates are prohibited; therefore, A arranges to have all future shipments run through a foreign corporation in a third country which will affix the necessary negative certificate before forwarding the machines on to Y.

A's action constitutes evasion of this part, because it is a device to mask prohibited activity carried out on A's behalf.

(iv) A, a U.S. company, has been selling calculators to distributor B in country C for a number of years and routinely supplies positive certificates of origin. A receives an order from country Y which requires negative certificates of origin. A arranges to make all future sales to distributor B in country C. A knows B will step in and make the sales to Y which A would otherwise have made directly. B will make the necessary negative certifications. A's warranty, which it will continue to honor, runs to the purchaser in Y.

A's action constitutes evasion, because the diverting of orders to B is a device to mask prohibited activity carried out on A's behalf.

* * * * *

(x) Same as (ix), except that shortly after January 18, 1978, A, a U.S. company, insists that its suppliers sign contracts which provide that even after title passes from the supplier to A, the supplier will bear the risk of loss and indemnify A if goods which the supplier has furnished are denied entry into Y for boycott reasons.

A's action constitutes evasion of this part, because it is a device or scheme which is intended to place a special burden on blacklisted persons because of Y's boycott.

(xi) Same as (x), except that A customarily insisted on such an arrangement with its supplier prior to January 18, 1978.

A's action is presumed not to constitute evasion, because use of this contractual arrangement was customary for A prior to January 18, 1978.

(xii) A, a U.S. company, has a contract to supply automobile sub-assembly units to boycotting country Y. Shortly after January 18, 1978, A insists that its suppliers sign contracts which provide that even after title passes to A, the supplier will bear the risk of loss and indemnify A if goods which the supplier has furnished are denied entry into boycotting country Y for any reason.

A's insistence on this arrangement is presumed to constitute evasion, because it is a device which is intended to place a special burden on blacklisted firms because of Y's boycott. The presumption may be rebutted by competent evidence showing that use of such an arrangement is customary without regard to the boycotting or non-boycotting character of the country to which it relates and that there is a legitimate non-boycott business reason for its use.

* * * * *

(xv) U.S. bank A is contacted by U.S. company B to finance B's transaction with boycotting country Y. Payment will be effected through a letter of credit in favor of B at its U.S. address. A knows that the letter of credit will contain restrictive boycott conditions which would bar its implementation by A if the beneficiary were a U.S. person. A advises B of the boycott condition and suggests to B that the beneficiary should be changed to C, a shell corporation in non-boycotting country M. The beneficiary is changed accordingly.

The actions of both A and B constitute evasion of this part, because the arrangement is a device to mask prohibited activities.

(xvi) Same as (xv), except that U.S. company B, the beneficiary of the letter of credit, arranges to change the beneficiary to B's foreign subsidiary so that A can implement the letter of credit. A knows that this has been done.

A's implementation of the letter of credit in the face of its knowledge of B's action constitutes evasion of this part, because A's action is part of a device to mask prohibited activity by both parties.

* * * * *

6. Section 760.5 is amended:

a. By revising the phrase ''Room 6099C'' in paragraph (b)(4) to read ''Room 6098'';

b. By revising paragraphs (b)(4)(i) and (b)(4)(ii); and

c. By revising examples (xxix), (xxx), (xxxiv), and (xxxv) in paragraph (c)(4) under the heading ''Examples'', to read as follows:

§ 760.5 Reporting requirements.

* * * * *

(b) * * *

(4) * * *

(i) Where the person receiving the request is a United States person located in the United States, each report of requests must be postmarked by the last day of the month following the calendar quarter in which the request was received (e.g., April 30 for the quarter consisting of January, February, and March).

(ii) Where the person receiving the request is a United States person located outside the United States, each report of requests must be postmarked by the last day of the second month following the calendar quarter in which the request was received (e.g., May 31 for the quarter consisting of January, February, and March).

* * * * *

(c) * * *

(4) * * *

Examples

* * * * *

(xxix) A, a U.S. manufacturer, is engaged from time-to-time in supplying drilling rigs to company B in boycotting country Y. B insists that its suppliers sign contracts which provide that, even after title passes from the supplier to B, the supplier will bear the risk of loss and indemnify B if goods which the supplier has furnished are denied entry into Y for whatever reason. A knows or has reason to know that this contractual provision is required by B because of Y's boycott, and that B has been using the provision since 1977. A receives an order from B which contains such a clause.

B's request is not reportable by A, because the request is deemed to be not reportable by these regulations if the provision was in use by B prior to January 18, 1978.

(xxx) Same as (xxix), except that A does not know when B began using the provision.

Unless A receives information from B that B introduced the term prior to January 18, 1978, A must report receipt of the request.

* * * * *

(xxxiv) U.S. exporter A, in shipping goods to boycotting country Y, receives a request from the customer in Y to state on the bill of lading that the vessel is allowed to enter Y's ports. The request further states that a certificate from the owner or master of the vessel to that effect is acceptable.

The request A received from his customer in Y is not reportable because it is a request of a type deemed to be not reportable by these regulations. (A may not make such a statement on the bill of lading himself, if he knows or has reason to know it is requested for a boycott purpose.)

(xxxv) U.S. exporter A, in shipping goods to boycotting country Y, receives a request from the customer in Y to furnish a certificate from the owner of the vessel that the vessel is permitted to call at Y's ports.

The request A received from his customer in Y is not reportable because it is a request of a type deemed to be not reportable by these regulations.

* * * * *

7. Supplement No. 1 to Part 760 is amended:

a. By revising the ''Interpretation'' under the heading ''B. *Shipping certificate.*'' in section ''I. Certifications'';

b. By revising the ''Interpretation'' under the heading ''C: *Insurance certificate.*'' in section ''I. Certifications''; and

c. By revising the ''Interpretation'' under the heading ''A. *Contractual clause regarding import laws of boycotting country.*'' in section ''II. Contractual Clauses'', as follows:

Supplement No. 1 to Part 760—Interpretations

* * * * *

I. Certifications

* * * * *

B. *Shipping certificate* * * *

Interpretation

It is the Department's position that furnishing a certificate, such as the one set out above, stating: (1) The name of the vessel, (2) The nationality of the vessel, and (3) The owner of the vessel and further declaring that the vessel: (a) Is not registered in a boycotted country, (b) Is not owned by nationals or residents of a boycotted country, and (c) Will not call at or pass through a boycotted country port enroute to its destination in a boycotting country falls within the exception contained in § 760.3(c) for compliance with the import and shipping document requirements of a boycotting country. See § 760.3(c) and examples (vii), (viii), and (ix) thereunder.

It is also the Department's position that the owner, charterer, or master of a vessel may certify that the vessel is ''eligible'' or ''otherwise eligible'' to enter into the ports of a boycotting country in conformity with its laws and regulations. Furnishing such a statement pertaining to one's own eligibility offends no prohibition under this part 760. See § 760.2(f), example (xiv).

On the other hand, where a boycott is in force, a declaration that a vessel is ''eligible''

or ''otherwise eligible'' to enter the ports of the boycotting country necessarily conveys the information that the vessel is not blacklisted or otherwise restricted from having a business relationship with the boycotting country. See § 760.3(c) examples (vi), (xi), and (xii). Where a person other than the vessel's owner, charterer, or master furnishes such a statement, that is tantamount to his furnishing a statement that he is not doing business with a blacklisted person or is doing business only with non-blacklisted persons. Therefore, it is the Department's position that furnishing such a certification (which does not reflect customary international commercial practice) by anyone other than the owner, charterer, or master of a vessel would fall within the prohibition set forth in § 760.2(d) unless it is clear from all the facts and circumstances that the certification is not required for a boycott reason. See § 760.2(d)(3) and (4). See also part A., ''Permissible Furnishing of Information,'' of Supplement No. 5 to this part.

C. Insurance certificate. * * *

Interpretation

It is the Department's position that furnishing the name of the insurance company falls within the exception contained in § 760.3(c) for compliance with the import and shipping document requirements of a boycotting country. See § 760.3(c)(1)(v) and examples (v) and (x) thereunder. In addition, it is the Department's position that furnishing a certificate, such as the one set out above, stating the address of the insurance company's principal office and its country of incorporation offends no prohibition under this part 760 unless the U.S. person furnishing the certificate knows or has reason to know that the information is sought for the purpose of determining that the insurance company is neither headquartered nor incorporated in a boycotted country. See § 760.2(d)(1)(i).

It is also the Department's position that the insurer, himself, may certify that he has a duly qualified and appointed agent or representative in the boycotting country and may furnish the name and address of his agent or representative. Furnishing such a statement pertaining to one's own status offends no prohibition under this part 760. See § 760.2(f), example (xiv).

On the other hand, where a boycott is in force, a declaration that an insurer ''has a duly qualified and appointed agent or representative'' in the boycotting country necessarily conveys the information that the insurer is not blacklisted or otherwise restricted from having a business relationship with the boycotting country. See § 760.3(c), example (v). Therefore, it is the Department's position that furnishing such a certification by anyone other than the insurer would fall within the prohibition set forth in § 760.2(d) unless it is clear from all the facts and circumstances that the certification is not required for a boycott reason. See § 760.2(d)(3) and (4).

* * * * *

II. Contractual Clauses

* * * * *

A. *Contractual clause regarding import laws of boycotting country.* * * *

Interpretation

It is the Department's position that an agreement, such as the one set out in the first sentence above, that the import and customs requirements of a boycotting country shall apply to the performance of a contract does not, in and of itself, offend any prohibition under this part 760. See § 760.2(a)(5) and example (iii) under ''Examples of Agreements To Refuse To Do Business.'' It is also the Department's position that an agreement to comply generally with the import and customs requirements of a boycotting country does not, in and of itself, offend any prohibition under this part 760. See § 760.2(a)(5) and examples (iv) and (v) under ''Examples of Agreements To Refuse To Do Business.'' In addition, it is the Department's position that an agreement, such as the one set out in the second sentence above, to comply with the boycotting country's import and customs requirements prohibiting the importation of products or components: (1) Originating in the boycotted country; (2) Manufactured, produced, or furnished by companies organized under the laws of the boycotted country; or (3) Manufactured, produced, or furnished by nationals or residents of the boycotted country falls within the exception contained in § 760.3(a) for compliance with the import requirements of a boycotting country. See § 760.3(a) and example (ii) thereunder.

The Department notes that a United States person may not furnish a negative certification regarding the origin of goods or their components even though the certification is furnished in response to the import and shipping document requirements of the boycotting country. See § 760.3(c) and examples (i) and (ii) thereunder, and § 760.3(a) and example (ii) thereunder.

* * * * *

8. Supplement No. 2 to Part 760 is amended:

a. By revising the phrase ''receipt of requests for such shipping and insurance certificates from Saudi Arabia is not reportable'' to read ''receipts of requests for such shipping and insurance certificates from Saudi Arabia are not reportable'' in the undesignated paragraph which begins with the phrase ''On the basis of this clarification''; and

b. By revising the phrase ''receipt of requests for such certifications is reportable'' to read ''receipts of requests for such certifications are reportable'' in the undesignated paragraph which begins with the phrase ''It is still the Department's position''.

9. Supplement No. 4 to Part 760 is amended by revising the second undesignated paragraph as follows:

Supplement No. 4 to Part 760—Interpretation

* * * * *

Section 760.1(d)(12) provides the general guidelines for determining when U.S.-origin goods shipped from a controlled in fact foreign subsidiary are outside U.S. commerce. The two key tests of that provision are that the goods were ''(i) * * * acquired without reference to a specific order from or transaction with a person outside the United States; and (ii) * * * further manufactured, incorporated into, refined into, or reprocessed into another product.'' Because the application of these two tests to spare parts does not conclusively answer the U.S. commerce question, the Department is presenting this clarification.

* * * * *

10. Supplement No. 5 to part 760 is amended by revising the phrase ''Section 760.3(f) of this part'' to read ''Section 760.3(g)'' in the undesignated paragraph following the heading ''B. *Availability of the Compliance with Local Law Exception to Establish a Foreign Branch*''.

11. Supplement No. 6 to part 760 is amended by revising paragraph (a) as follows:

Supplement No. 6 to Part 760—Interpretation

* * * * *

(a) * * *

This term is very common in letters of credit from Kuwait and may also appear from time-to-time in invitations to bid, contracts, or other trade documents. It imposes a condition or requirement compliance with which is prohibited, but permitted by an exception under the Regulations (see § 760.2(a) and § 760.3(a)). It is reportable by those parties to the letter of credit or other transaction that are required to take or refrain from taking some boycott related action by the request. Thus the bank must report the request because it is a term or condition of the letter of credit that it is handling, and the exporter-beneficiary must report the request because the exporter determines the origin of the goods. The freight forwarder does not have to report this request because the forwarder has no role or obligation in selecting the goods. However, the freight forwarder would have to report a request to furnish a certificate that the goods do not originate in or contain components from a boycotted country. See § 760.5, examples (xii)–(xvii).

* * * * *

12. Supplement No. 7 to part 760 is amended:

a. By revising the phrase ''§ 760.3(c) of this part'' to read ''§ 760.3(d)'' in the second undesignated paragraph; and

b. By revising the third undesignated paragraph as follows:

Supplement No. 7 to Part 760—Interpretation

* * * * *

''A United States person may comply or agree to comply in the normal course of business with the unilateral and specific selection by a boycotting country * * * of * * * specific goods, * * * provided that * * * with respect to goods, the items, in the normal course of business, are identifiable as to their source or origin at the time of their entry into the boycotting country by (a) uniqueness of design or appearance or (b) trademark, trade name, or other identification normally on the items themselves, including their packaging.''

* * * * *

13. Supplement No. 8 to part 760 is amended by revising the phrase ''§ 760.1(d)(13) of this part'' to read ''§ 760.1(d)(3)'' in the third undesignated paragraph.

14. Supplement No. 9 to part 760 is amended by revising the phrase ''§ 760.3(f) of this part'' to read ''§ 760.3(g)'' the first undesignated paragraph.

15. Supplement No. 10 to part 760 is amended by revising the phrase ''non exclusionary, non blacklisting statement'' to read ''non-exclusionary, non-blacklisting statement'' in the undesignated paragraph that follows paragraph heading (b).

16. Supplement No. 11 to part 760 is amended:

a. By placing quotation marks around the undesignated paragraph that follows the phrase ''§ 760.5(a)(4) of this part status in part''; and

b. By revising the parenthetical phrase ''(§ 760.5(a)(6) of this part)'' to read ''(§ 760.5(b)(6)'' in the last undesignated paragraph.

17. Supplement No. 12 to part 760 is amended:

a. By placing beginning and ending quotation marks around the first and second undesignated paragraphs, respectively, that follow the phrase ''Example (v) under § 760.4 of this part (Evasion) provides:''

b. By revising the phrase ''recently imposed by the government'' to read ''imposed by the government'' in the undesignated paragraph that begins with the phrase ''This interpretation deals with''; and

c. By placing quotation marks around the undesignated paragraph that begins with the phrase ''Declaration: I, the undersigned''.

18. Supplement No. 13 to part 760 is amended:

a. By revising the phrase ''§ 760.3(c) of this part'' to read ''§ 760.3(d)'' in the undesignated paragraph following the heading ''Summary'';

b. By placing quotation marks around the third undesignated paragraph following the heading ''Regulatory Background'';

c. By revising the phrase ''§ 760.3(c)'' part'' to read ''§ 760.3(d)'' in the fourth undesignated paragraph following the heading ''Regulatory Background'';

d. By revising the heading ''Analysis of the New Contractual Language'' to read ''Analysis of Additional Contractual Language'';

e. By revising the phrase ''of a new contractual clause'' to read ''of a contractual clause'' in the undesignated paragraph following the newly revised heading ''Analysis of the New Contractual Language'';

f. By revising the heading ''Boycott of Boycotted Country'' to read ''Boycott of [Name of Boycotted Country]'';

g. By revising the phrase ''§ 760.3(c) of this part'' to read ''§ 760.3(d)'' in the last undesignated paragraph of this supplement.

19. Supplement No. 14 to part 760 is amended:

a. By placing beginning and ending quotation marks around the first and second undesignated paragraphs, respectively, following the sentence ''The following language has appeared in tender documents issued by a boycotting country:'' in paragraph (a);

b. By revising the phrase ''Agreement to Refuse to Do Business'' to read ''Agreements to Refuse to Do Business'' in the last sentence of the third undesignated paragraph following the sentence ''The following language has appeared in tender documents issued by a boycotting country:'' in paragraph (a);

c. By revising the phrase ''§ 760.6(a)(1) of this part'' to read ''§ 760.5(a)(1) of this part'' in the last undesignated paragraph following the sentence ''The following language has appeared in tender documents issued by a boycotting country:'' in paragraph (a); and

d. By placing beginning and ending quotation marks around the first and second undesignated paragraphs, respectively, that follow the sentence ''The following terms frequently appear on letters of credit covering shipment to Iraq:'' in paragraph (b).

Dated: May 18, 2000.

R. Roger Majak,

Assistant Secretary for Export Administration.

[FR Doc. 00–13251 Filed 5–31–00; 8:45 am]

BILLING CODE 3510–33–P

SOCIAL SECURITY ADMINISTRATION

20 CFR Parts 404 and 416

[Regulations Nos. 4 and 16]

RIN 0960–AD91

Federal Old-Age, Survivors and Disability Insurance and Supplemental Security Income for the Aged, Blind, and Disabled; Medical and Other Evidence of Your Impairment(s) and Definition of Medical Consultant

AGENCY: Social Security Administration.

ACTION: Final rules.

SUMMARY: We are revising the Social Security and Supplemental Security Income (SSI) disability regulations regarding sources of evidence for establishing the existence of a medically determinable impairment under title II and title XVI of the Social Security Act (the Act). We are doing this to clarify and expand the list of acceptable medical sources and to revise the definition of the term ''medical consultant'' to include additional acceptable medical sources.

DATES: These rules are effective July 3, 2000.

FOR FURTHER INFORMATION CONTACT: Georgia E. Myers, Regulations Officer, Social Security Administration, 6401 Security Boulevard, Baltimore, Maryland 21235–6401, 1–410–965–3632 or TTY 1–800–966–5609. For information about eligibility or filing for benefits, call our national toll-free number, 1–800–772–1213 or TTY 1–800–325–0778.

SUPPLEMENTARY INFORMATION: The Act provides, in title II, for the payment of disability benefits to persons insured under the Act. Title II also provides, under certain circumstances, for the payment of child's insurance benefits based on disability and widow's and widower's insurance benefits for disabled widows, widowers, and surviving divorced spouses of insured persons. In addition, the Act provides, in title XVI, for SSI payments to persons who are aged, blind, or disabled and who have limited income and resources.

For adults under both the title II and title XVI programs (including persons claiming child's insurance benefits based on disability under title II), ''disability'' means the inability to engage in any substantial gainful activity. For an individual under age 18 claiming SSI benefits based on disability, ''disability'' means that an impairment(s) causes ''marked and severe functional limitations.'' (Our regulations at § 416.902 explain that, *''[m]arked and severe functional*

limitations, when used as a phrase, * * * is a level of severity that meets or medically or functionally equals the severity of a listing in the Listing of Impairments in appendix 1 of subpart P of part 404 * * *.'') Under both title II and title XVI, disability must be the result of a medically determinable physical or mental impairment or combination of impairments that can be expected to result in death or that has lasted or can be expected to last for a continuous period of at least 12 months.

The Act also provides that an individual shall not be considered to be under a disability unless he or she furnishes such medical and other evidence of the existence of such impairment(s) as the Commissioner may require.

Explanation of Revisions

Sections 404.1513 and 416.913 provide that we need reports about an individual's impairments from acceptable medical sources; they also provide a list of ''acceptable medical sources.'' Acceptable medical sources are individuals who have the training and expertise to provide us with the signs and laboratory findings based on medically acceptable clinical and laboratory diagnostic techniques that establish the existence of a medically determinable physical or mental impairment.

We are amending §§ 404.1513 and 416.913 by revising the list of acceptable medical sources and making other changes to these and other sections of our regulations as explained below.

For clarity, we refer to the new rules, as revised in this regulatory publication, as ''final'' rules and to the rules that are being changed by these final rules as the ''prior'' rules. However, these final rules do not go into effect until 30 days after the date of this publication. Therefore, the ''prior'' rules will still be in effect for another 30 days.

Sections 404.1513 and 416.913 Medical Evidence of Your Impairment

We are revising the heading to read, ''*Medical and other evidence of your impairment(s)*'' to more accurately identify the subject of these sections. Even though these prior sections were called ''*Medical evidence of your impairment,*'' they have always described how we use evidence from both acceptable medical sources and other sources, such as (but not limited to) nurse-practitioners, chiropractors, school teachers, and social workers. Sections 223(d)(3) and 1614(a)(3)(D) of the Act require that an individual have a medically determinable physical or mental impairment that results from anatomical, physiological, or psychological abnormalities which are demonstrable by medically acceptable clinical and laboratory diagnostic techniques. To establish the existence of a medically determinable impairment, we require evidence from acceptable medical sources. However, as indicated in both the prior §§ 404.1513(e) and 416.913(e) and the final §§ 404.1513(d) and 416.913(d), we also may use evidence from other sources to help us understand how an adult's impairment(s) affects the ability to work and how a child's impairment(s) affects the ability to function.

We are revising the heading of §§ 404.1513(a) and 416.913(a) to ''*Sources who can provide evidence to establish an impairment*'' and the provisions of these paragraphs as well. These revisions make it clear that we need evidence from acceptable medical sources to establish the existence of a medically determinable impairment. We then continue to list the sources that we consider acceptable medical sources in final paragraphs (a)(1) through (a)(5). In addition, as described below, we are making some revisions to this list of acceptable medical sources. We are also adding a cross-reference to § 404.1508 in § 404.1513(a) and a cross-reference to § 416.908 in § 416.913(a). The regulations to which we are cross-referring, both entitled ''*What is needed to show an impairment,*'' describe the type of medical evidence we require to establish the existence of a medically determinable impairment.

We are revising prior paragraph (a)(1) (''Licensed physicians'') by combining it with prior paragraph (a)(2) (''Licensed osteopaths'') because osteopaths are physicians. Their medical degree is usually Doctor of Osteopathy (D.O.), rather than Doctor of Medicine (M.D.). Thus, a licensed physician may be either a medical or an osteopathic physician. Because of this consolidation of two paragraphs, we are renumbering prior paragraphs (a)(3) and (a)(4) as final paragraphs (a)(2) and (a)(3).

We have also added language to final paragraph (a)(2) (prior paragraph (a)(3), ''Licensed or certified psychologists'') to provide that licensed or certified school psychologists, or licensed or certified individuals with other titles who perform the same function as a school psychologist in a school setting, are acceptable medical sources for establishing the existence of mental retardation, learning disabilities, and borderline intellectual functioning. The final provision reflects our longstanding operating instructions. It also includes an additional change, which did not appear in the proposed rules, that we have made in response to public comments.

Before including school psychologists as acceptable medical sources in our operating instructions for purposes of establishing the existence of mental retardation and learning disabilities, we conducted a State-by-State analysis of the educational qualifications and other requirements for their licensure or certification, and we had discussions with representatives of the National Association of School Psychologists on the issue of what school psychologists are uniformly qualified to do nationwide. Although the term ''licensed or certified psychologists'' encompasses school psychologists, we found that there was a lack of national uniformity among the States as to what school psychologists are allowed to do beyond assessing cognitive functioning, such as in the areas of mental retardation and learning disabilities. We determined, however, that licensed or certified school psychologists (or licensed or certified individuals with other titles who perform the same functions as school psychologists in school settings) are able to provide us with a complete medical report of manifestations related to these kinds of disorders. Therefore, we concluded that all individuals who are licensed or certified by their States as school psychologists (or approved in Michigan, which is equivalent to licensure or certification in other States) are medical sources who can establish the existence of mental retardation and learning disabilities. We discuss an additional change below in the *Public Comments* section, where we summarize and respond to the public comments we received following our publication of these regulatory provisions in the **Federal Register** as proposed rules on October 9, 1998 (63 FR 54417). The additional change is that we have concluded that these individuals are also acceptable medical sources for the purpose of establishing the existence of borderline intellectual functioning.

We are adding a new paragraph (a)(4) to include licensed podiatrists as acceptable medical sources for impairments of the foot, or foot and ankle, depending on the delineation in the State licensure. We have included these sources in our operating instructions for many years as acceptable medical sources for purposes of establishing the existence of a medically determinable impairment of the foot, or foot and ankle, because they are licensed to practice medicine and perform surgery on a specific part of the body. They can do everything that a physician is licensed to do with respect

to the foot, or foot and ankle, and have equal standing to physicians in this respect. Final paragraph (a)(4) provides that whether evidence from a given podiatrist can be used to establish the existence of a medically determinable impairment of the foot only, or the foot and ankle, will depend on the scope of practice of podiatry in a State; *i.e.,* whether the State in which the podiatrist practices permits the practice of podiatry on the foot only, or on the foot and ankle. Medical reports from podiatrists can provide us with all the evidence we require to establish the existence of a medically determinable impairment of the foot, or foot and ankle.

We are deleting prior paragraph (a)(5), which provided that persons authorized to send us a copy or summary of the medical records of a hospital or other institution were acceptable medical sources. Regardless of who is authorized to send us a medical report, the evidence itself must be provided by an acceptable medical source identified in final paragraphs (a)(1) through (a)(5). Similarly, we are deleting prior paragraph (a)(6) (that appears only in § 416.913), which provided that reports of an interdisciplinary team were acceptable medical sources as long as they contained the evaluation and signature of an acceptable medical source. It does not matter whether the evaluation by an acceptable medical source identified in final paragraphs (a)(1) through (a)(5) is included in an interdisciplinary team report or is contained in a separate report. Because acceptable medical sources are individuals, it is redundant and somewhat misleading to provide that an interdisciplinary team report containing the evaluation and signature of an acceptable medical source is such a source.

We are adding a new paragraph (a)(5) to include qualified speech-language pathologists as acceptable medical sources who can establish the existence of a speech or language impairment. For several years, we have included these individuals in our operating instructions as medical sources who can provide evidence to establish the existence of a medically determinable speech or language impairment in SSI childhood disability cases in which the child is found disabled. The final regulation now provides that these individuals are acceptable medical sources for speech and language impairments regardless of whether the determination or decision is favorable to the individual, and is applicable to both adults and children and to disability claims under both titles of the Act.

Before including qualified speech-language pathologists in our operating instructions, we conducted a State-by-State analysis of the educational qualifications and other requirements for licensure or certification of speech-language pathologists, and we had discussions with representatives of the American Speech-Language-Hearing Association. We determined that the evaluation report of a qualified speech-language pathologist can provide us with the detailed evidence we need about a person's communicative ability that enables us to determine the existence of a medically determinable speech or language impairment.

Final paragraph (a)(5) provides that ''qualified'' speech-language pathologists are individuals who are licensed by the State professional licensing agency, or fully certified by their State's education agency, or who hold a Certificate of Clinical Competence from the American Speech-Language-Hearing Association. We have cited State licensure as the first credential for speech-language pathologists to be consistent with the paragraphs for physicians and other acceptable medical sources in this section, all of which require that the individual be ''licensed.'' We have cited the State education agency certification as an alternative credential because some States do not have licensing agencies for speech-language pathologists; thus, the only State credential that speech-language pathologists have in such States is State education agency certification. To maintain either State licensure or State education agency certification, an individual must meet certain criteria (*e.g.,* must obtain 20 continuing education units in the field over a 2-year period). We have also cited a Certificate of Clinical Competence from the American Speech-Language-Hearing Association as another acceptable credential because it indicates that a speech-language pathologist has met the stringent criteria for education, training, examination, and clinical practice set forth by the American Speech-Language-Hearing Association.

Finally, we have made minor editorial revisions to the provisions in §§ 404.1513(a)(1) through (a)(5) and 416.913(a)(1) through (a)(5). The revisions, mostly to correct punctuation, are not substantive and are not intended to change the meaning of the provisions.

We are redesignating prior §§ 404.1513(d) and 416.913(d), ''*Completeness,*'' as §§ 404.1513(e) and 416.913(e). We are redesignating prior paragraph (e) of those sections, ''*Information from other sources,*'' as paragraph (d). Our intent in switching the positions of these two paragraphs is to make it clearer that, when we decide whether the evidence in a case is complete enough for a determination, we consider all the evidence in the case record, including the medical evidence from acceptable medical sources identified in paragraph (a), information from the individual, and any evidence that may have been provided by other sources, such as those identified in final paragraph (d).

We are also revising the language in final §§ 404.1513(d) and 416.913(d) (prior paragraph (e)) by making technical changes for clarity and for consistency between these provisions in parts 404 and 416, which contained some differences in our prior rules. We are also reorganizing and renumbering the subparagraphs in final paragraph (d). In addition, we are deleting the words ''*Information from*'' in the heading.

We are revising the first sentence of § 404.1513(d) to read: ''In addition to evidence from the acceptable medical sources listed in paragraph (a) of this section, we may also use evidence from other sources to show the severity of your impairment(s) and how it affects your ability to work.'' We are also revising the first sentence of § 416.913(d) to read: ''In addition to evidence from the acceptable medical sources listed in paragraph (a) of this section, we may also use evidence from other sources to show the severity of your impairment(s) and how it affects your ability to work or, if you are a child, your functioning.'' In both of these sentences, we are adding a reference to the severity of the individual's impairment(s) because we may use evidence from other sources to show impairment severity, as well as how it affects the ability to work or, in § 416.913(d), a child's functioning. In final § 416.913(d), we are changing the language ''or, if you are a child, your ability to function independently, appropriately, and effectively in an age-appropriate manner'' to ''or, if you are a child, your functioning,'' in response to section 211 of Public Law 104–193 which, on August 22, 1996, added a new paragraph 1614(a)(3)(C) to the Act that changed the definition of disability for individuals under age 18 claiming SSI benefits.

We are adding the phrase ''but are not limited to'' to the second sentence of final § 404.1513(d) to clarify that the list of other sources is not an exclusive list and to make it consistent with the language in prior § 416.913(e) (final § 416.913(d)). We also have deleted the words ''may'' and ''and'' from the

second sentence of final § 416.913(d), and inserted the word ''but'' after the phrase ''Other sources include'' to make it consistent with the second sentence of final § 404.1513(d).

In making these changes in the two sections, we are consolidating the provisions from prior §§ 416.913(e)(3) and (e)(4) in final paragraph (d)(1) and modifying the example of therapists that was in the proposed rules so that it is not restricted to just physical therapists. The examples in the proposed rules should not have been limited to physical therapists because there are other types of therapists, such as occupational therapists, as identified in prior § 416.913(e)(4), recreational therapists, and kinesiotherapists. We are deleting ''speech and language therapists'' from the examples that were in prior § 416.913(e)(4) because, as discussed earlier in this preamble, we are amending the regulations to include these individuals as acceptable medical sources. (However, in final § 404.1513(a)(5) and 416.913(a)(5), we use the term ''speech-language pathologists'' because it is a more accurate title for these health care professionals.)

We are clarifying in final §§ 404.1513(d)(1) and 416.913(d)(1), the list of individuals, such as nurse-practitioners and audiologists, who provide some medical services by adding the phrase, ''Medical sources not listed in paragraph (a) of this section.'' We are including in §§ 404.1513(d)(1) and 416.913(d)(1) some of the examples of other medical sources that previously were contained only in prior § 404.1513(e)(3) or only in prior § 416.913(e)(3) and (e)(4). The prior provisions did not provide all the same examples, and the final rules are now consistent in parts 404 and 416.

Final §§ 404.1513(d)(2) and 416.913(d)(2) reflect provisions that were only in prior § 416.913(e)(5).

We are adding the word ''personnel'' in final §§ 404.1513(d)(3) and 416.913(d)(3). The prior sections (§§ 404.1513(e)(1) and 416.913(e)(1)) referred to public and private social welfare ''agencies.'' However, when we refer to ''sources'' in these rules, we mean people, not entities. This change also makes the provision similar to other provisions within these sections.

We begin final §§ 404.1513(d)(4) and 416.913(d)(4) with the phrase, ''Other non-medical sources,'' instead of ''Observations by,'' to make the construction of final paragraph (d)(4) parallel to that of final paragraphs (d)(1) through (d)(3). We are also adding the language ''(for example, spouses, parents and other caregivers, siblings, other relatives, friends, neighbors, and clergy)'' to final § 404.1513(d)(4) to make it consistent with the language in prior § 416.913(e)(2) (final § 416.913(d)(4)).

As is discussed below in the *Public Comments* section, we revised the proposed first sentence of final §§ 404.1513(e) and 416.913(e) (prior paragraph (d)) to read: ''The evidence in your case record, including the medical evidence from acceptable medical sources (containing the clinical and laboratory findings) and other medical sources not listed in paragraph (a), information you give us about your medical condition(s) and how it affects you, and other evidence from other sources, must be complete and detailed enough to allow us to make a determination or decision about whether you are disabled or blind.'' In the Notice of Proposed Rulemaking (NPRM), we proposed to simplify the sentence by deleting any reference to the medical evidence and referring only to ''the evidence'' in a claim. A commenter believed that it would be better to retain reference to the medical evidence and simply to refer to the types of evidence we obtain. As in the proposed rules, the change in the final rules will clarify that we do not look only at medical evidence from the acceptable medical sources identified in paragraph (a), but also at information provided by the individual and any evidence that might have been provided by other sources, as described in final paragraph (d), when we make a determination whether the individual is disabled or blind.

We have revised final paragraph (e)(1) by deleting the term ''limiting effects'' and substituting in its place the word ''severity,'' which more accurately conveys the statutory requirement that an individual must have a severe impairment to be found disabled. We are revising the language in final paragraph (e)(2) to more accurately refer to whether the duration requirement, as described in §§ 404.1509 and 416.909, is met.

We are revising final paragraph (e)(3) by qualifying the language about residual functional capacity because the combined evidence must be complete and detailed enough to allow us to determine the individual's residual functional capacity only when the evaluation steps described in §§ 404.1520(e) or (f)(1) and 416.920(e) or (f)(1) apply. We are also adding the phrase ''or, if you are a child, your functioning'' to § 416.913(e)(3) because ability to function is the relevant issue that we must determine for a child, not residual functional capacity.

Other Changes

Sections 404.1503 and 416.903 Who Makes Disability and Blindness Determinations.

We have removed the last sentence in paragraph (e) because it addressed only the role in disability determinations of psychological consultants, and did not address the parallel situations of speech-language pathologists and other consultants. We now provide more comprehensive rules in revised paragraphs (c) and (f) of §§ 404.1616 and 416.1016. We explain that non-physician medical consultants and psychological consultants can only evaluate impairments within their area of expertise.

Sections 404.1512 and 416.912 Evidence of Your Impairment.

We are changing the cross-reference in paragraph (b)(4) from paragraph (e) to paragraph (d) to reflect the reversal and redesignation of these two paragraphs already explained above.

Sections 404.1526 and 416.926 Medical Equivalence

We are revising the second sentence in paragraph (c) of §§ 404.1526 and 416.926 to indicate that a medical consultant must be an acceptable medical source identified in §§ 404.1513(a)(1) or (a)(3) through (a)(5) and 416.913(a)(1) or (a)(3) through (a)(5). We believe the acceptable medical sources identified in these sections, in addition to physicians, are fully qualified to serve as medical consultants within their areas of expertise.

As we discuss below in the *Public Comments* section, we received comments indicating that our intent was unclear. Accordingly, we are also revising the last sentence of paragraph (c), the parenthetical cross-references to §§ 404.1616 and 416.1016. The additional language we have included in final §§ 404.1616 and 416.1016 clarifies that medical consultants who are not physicians are limited to evaluating impairments within their specialties; for example, a speech-language pathologist functioning as a medical consultant would be able to provide an opinion about medical equivalence only with respect to a speech or language impairment.

Sections 404.1615 and 416.1015 Making Disability Determinations

We are removing the last sentence in paragraph (d). In the NPRM, we inadvertently failed to propose deleting this last sentence, which is the exact same provision contained in the last

sentence we are removing in paragraph (e) of §§ 404.1503 and 416.903. Therefore, for the same reasons discussed earlier for the deletion in §§ 404.1503 and 416.903, we are deleting this last sentence as well from §§ 404.1615(d) and 416.1015(d).

Sections 404.1616 and 416.1016 Medical or Psychological Consultants

In the NPRM, we proposed to revise the first sentence in §§ 404.1616 and 416.1016 to indicate that a medical consultant must be an acceptable medical source identified in §§ 404.1513(a)(1) or (a)(3) through (a)(5) and 416.913(a)(1) or (a)(3) through (a)(5). As we discuss below in the *Public Comments* section, we received a number of comments that indicated to us that our intent was unclear or that recommended additional rules defining the authority of medical consultants who are not physicians. Accordingly, we have extensively revised §§ 404.1616 and 416.1016.

The final rules now contain six paragraphs, designated (a) through (f). Paragraph (a), ''*What is a medical consultant*?'' explains that a ''medical consultant'' is a person who is a member of a team that makes disability determinations in a State agency, as explained in §§ 404.1615 and 416.1015, or who is a member of a team that makes disability determinations for us when we make disability determinations ourselves.

Paragraph (b), ''*What qualifications must a medical consultant have*?'' provides that a medical consultant must be an acceptable medical source identified in §§ 404.1513(a)(1) and (a)(3) through (a)(5) and 416.913(a)(1) and (a)(3) through (a)(5) and names all of the acceptable medical sources, in addition to cross-referencing these provisions as we had done in the NPRM. We believe that this is a clearer way to explain who is included. The paragraph also provides that the medical consultant must meet any appropriate qualifications for his or her specialty as explained in § § 404.1513(a) or 416.913(a).

Final paragraph (c) is called, ''*Are there any limitations on what medical consultants who are not physicians can evaluate*?'' In this paragraph, we clarify in response to comments what was always our intent: that even though any individual who is an acceptable medical source may be a medical consultant, medical consultants who are not physicians are limited to evaluations to the same extent that they would be limited in providing evidence of a medically determinable impairment. We provide an example explaining the limitations of a State agency medical consultant who, as a team member that makes disability determinations, is a speech-language pathologist.

Paragraph (d) is called, ''*What is a psychological consultant*?'' It explains that a psychological consultant may function in the same capacity as any of the individuals in paragraph (a) except that they are limited to the evaluation of mental impairments.

Paragraph (e) incorporates the second and third sentences of the opening paragraph of prior §§ 404.1616 and 416.1016, and paragraphs (a), (b), and (c) of those sections. We have incorporated the provisions verbatim. The only differences are in the letter and number designations of the paragraph and subparagraphs and the new heading we added to final paragraph (e) for consistency with the headings of the previous paragraphs. The prior provisions did not use headings.

Paragraph (f) is called, ''*Are there any limitations on what a psychological consultant can evaluate*?'' It parallels paragraph (c) of this section, discussed above.

Public Comments

We published these regulatory provisions in the **Federal Register** as an NPRM on October 9, 1998 (63 FR 54417). The comment period closed on December 8, 1998. We received comments in response to this notice from 12 individuals and organizations, including government agencies whose interests and responsibilities require them to have some expertise in the evaluation of medical evidence used in making disability determinations under titles II and XVI of the Act. We also received comments from a private, non-profit organization for the disabled, an individual attorney, health care professional organizations, and an employee union.

Most of the commenters stated that they supported the proposed rules. However, a number of commenters offered suggestions for revisions and additions, as explained below. Three commenters supported the rules without making any recommendations. One commenter opposed all of the rules. Because some of the comments were similar, we condensed, summarized, or paraphrased them. We have, however, tried to summarize the commenters' views accurately and to respond to all of the significant issues raised by the commenters that are within the scope of these rules.

Comment: Two commenters recommended that we revise paragraph (a)(2) of §§ 404.1513 and 416.913 to include borderline intellectual functioning in the list of impairments that can be established by evidence from licensed or certified school psychologists.

Response: We adopted the comments. As one of the commenters noted, borderline intellectual functioning is a medically determinable mental impairment that results from psychological abnormalities demonstrable by medically acceptable clinical and laboratory diagnostic techniques. It is usually assigned to individuals who have an intelligence quotient (IQ) score in the 71–84 range and for whom the diagnosis of mental retardation has been excluded. School psychologists are qualified to assess cognitive abilities at all levels, and we agree that they can establish the existence of borderline intellectual functioning.

Comment: One commenter recommended that we expand proposed paragraph (a)(5) of §§ 404.1513 and 416.913 to permit qualified speech-language pathologists to establish speech, language, ''or related (*e.g.,* swallowing)'' impairments. The commenter also recommended that we expand the qualification criterion in the proposed rules concerning meeting State education agency standards to say: ''* * * provided such standards are consistent with the highest requirements for State-approved or State-recognized certification, licensing, registration, or other comparable requirements for speech-language pathologists.'' The commenter believed that this would make clear that the word ''qualified'' refers to individuals who have met the requirements in the State, and would ensure that only those individuals with sufficient training and clinical expertise are allowed to provide evidence used in making a disability determination.

Response: We are not adopting the recommendation to consider speech-language pathologists as acceptable medical sources for ''related (*e.g.,* swallowing)'' impairments. Because of the complex anatomical and physiological construct involved in the swallowing mechanism, specific knowledge and training that encompass the medical areas of neurology, otolaryngology, and gastroenterology are required for the proper interpretation of laboratory and imaging studies necessary in arriving at the diagnosis, prognosis, and treatment regimen pertaining to the variety of disorders associated with swallowing. Therefore, we will continue to require evidence from a licensed physician to establish

the existence of a medically determinable swallowing impairment.

We are also not adopting the second comment about State education agency standards being consistent with the highest State requirements because it would not be feasible for us to constantly monitor such standards and requirements in each State.

For reasons already noted above in the summary of the changes in these final rules, we have cited State licensure as the first credential in the rule.

Comment: One commenter recommended that we not delete paragraph (a)(6) of § 416.913, the paragraph that addresses interdisciplinary assessments in which there is a signature from an acceptable medical source. The commenter believed that this paragraph helps to avoid confusion about the acceptability of evidence that is signed by both a medical and a nonmedical source. The commenter also recommended that we add the same provision to § 404.1513.

Response: We did not adopt the comment because the construction of paragraph (a)(6) is confusing and not parallel to the construction of the other paragraphs in paragraph (a). Paragraph (a) concerns who is an acceptable medical source, not what is ''acceptable medical evidence.'' Moreover, an acceptable medical source must be a person, not ''[a] report'' as stated in paragraph (a)(6). The fact that an interdisciplinary team report is co-signed by both a medical and nonmedical source does not mean that the report cannot be considered ''acceptable medical evidence,'' *i.e.,* evidence from an acceptable medical source. Provided that the medical source is an acceptable medical source identified in final paragraphs (a)(1) through (a)(5) of § § 404.1513 and 416.913, it does not matter whether an evaluation signed by an acceptable medical source is included in an interdisciplinary team report or is contained in a separate report.

Comment: Three commenters recommended that we include other medical professionals in our list of acceptable medical sources. One commenter recommended that we include optometrists for the determination of other aspects of eye diseases, in addition to the measurement of visual acuity and visual fields. Another commenter recommended that we recognize audiologists as acceptable medical sources for purposes of establishing hearing or related (*e.g.,* balance) impairments only. This source recommended criteria for establishing that an audiologist is ''qualified'' for our program. The third commenter recommended that we include pediatric nurse-practitioners for establishing the existence of medically determinable impairments in children.

Response: We did not adopt the comments. Sections 223(d)(3) and 1614(a)(3)(D) of the Act require that an individual have a medically determinable physical or mental impairment that results from anatomical, physiological, or psychological abnormalities which are demonstrable by medically acceptable clinical and laboratory diagnostic techniques. In keeping with these statutory provisions, we generally consider licensed physicians and licensed or certified psychologists, who are the most qualified health care professionals, as ''acceptable medical sources'' who can establish the existence of a medically determinable impairment. We have also provided in these final rules that podiatrists and speech-language pathologists may be acceptable medical sources, not only because of their unique qualifications, but because we have determined that there is sufficient standardization of their qualifications across the States for us to provide rules for their general use in claims. We have not determined this for other specialties. Therefore, we believe it would be inappropriate to include these additional specialties at this time.

However, we want to make clear that we consider information from the sources named in the comments to be important evidence when we determine the severity of an individual's impairment. The rules on who is an acceptable medical source address a single, narrow issue in our disability evaluations: who can provide evidence to establish whether an individual has a medically determinable impairment as required by the Act. Once an individual has crossed this threshold, we can and do consider all evidence that helps us to determine the severity of the impairment and its effects on the individual. For this critical aspect of the disability determination process, we will continue to use information from the sources named in the comments.

Comment: One commenter disagreed with our inclusion of licensed or certified psychologists, school psychologists and speech-language pathologists as ''acceptable medical sources'' in our regulations. The commenter said that we should clarify that these sources are acceptable sources of evidence but that they are not ''medical'' sources. The commenter believed that ''medical'' sources should refer only to physicians and that Congress did not intend for us to include any of the other sources.

Response: We did not adopt the comment. Sections 223(d)(3) and 1614(a)(3)(D) of the Act define a medically determinable impairment as one that results from ''anatomical, physiological, or psychological abnormalities which are demonstrable by medically acceptable clinical and laboratory diagnostic techniques.'' As we noted in the preamble to the proposed rules, we have included licensed or certified school psychologists (or licensed or certified individuals with other titles who perform the same function as a school psychologist in a school setting) and speech-language pathologists as ''acceptable medical sources'' because we have determined that they can provide us with medical evidence to establish the existence of a medically determinable impairment within their areas of specialty using ''medically acceptable clinical and laboratory diagnostic techniques,'' as defined in section 223(d)(3) of the Act. We have included licensed or certified psychologists in our regulations defining acceptable medical sources for many years, and, in fact, section 221(h) of the Act refers to these sources as qualified to complete the medical portion of our case review where there is evidence which indicates the existence of a mental impairment.

Comment: Five of the commenters commented about the provisions in § § 404.1526(c), 404.1616, 416.926(c) and 416.1016 of the proposed rules that would define the term ''medical consultant'' to include any acceptable medical source in § § 404.1513(a)(1) or (a)(3) to (a)(5) and 416.913(a)(1) or (a)(3) to (a)(5). One commenter simply noted that this would permit licensed optometrists, licensed podiatrists, and qualified speech-language pathologists to function as ''medical consultants,'' but the commenter did not note approval or disapproval or make any recommendations. Two commenters indicated that such sources would have limited usefulness as medical consultants in the State agencies that make disability determinations for us because their expertise is so narrow. One of these commenters recommended that we should include provisions defining the authority of these individuals in § § 404.1526(c) and 416.926(c), our regulations on ''*Who is a designated medical or psychological consultant*'' for purposes of determining medical equivalence, and in § § 404.1616 and 416.1016, our regulations defining the standards for

who can be a medical or psychological consultant.

Two commenters opposed expanding the definition of medical consultant to include optometrists, podiatrists, and speech-language pathologists as medical consultants. One commenter believed that there was no rational justification in the proposed regulations for the ''dramatic'' change, and was concerned that the change would jeopardize the integrity of the disability programs, especially if it is implemented in conjunction with some of the Disability Redesign proposals. This commenter, while opposing the use of the sources as medical consultants, otherwise generally agreed with our proposal to consider these sources to be acceptable medical sources for purposes of providing medical evidence we need to establish the existence of a medically determinable impairment.

The last commenter, who opposed using these sources even as ''acceptable medical sources'' for establishing the existence of medically determinable impairments, focused on the proposal as it affected § § 404.1526 and 416.926. This commenter indicated that the sources were ''nonqualified.'' The commenter provided a number of specific reasons that they should not be permitted to make determinations of medical equivalence, primarily because they would be making decisions regarding areas for which they have no training or expertise and for which they are unlicensed under the law of any State. The commenter also recommended that we revise the medical equivalence regulations to clarify the various ways in which we make findings of medical equivalence. The commenter also stated that we should specify that all claims of combined mental and physical disorders should be reviewed by a psychiatrist to ensure that all aspects of mental and physical disorders are considered in rating the severity of impairment at any step of our process for determining disability.

Response: We are revising § § 404.1616 and 416.1016 in response to these comments. We are also adding a cross-reference to § § 404.1616 and 416.1016 for medical consultants who are not physicians at the end of § § 404.1526(c) and 416.926(c) as we have noted in the explanation of the changes.

As two of the commenters recognized, our intent in the NPRM was to limit the authority of licensed optometrists, licensed podiatrists, and qualified speech-language pathologists to evaluate impairments with regard to their areas of expertise delineated in proposed § § 404.1513(a) and 416.913(a). However, the comments made us realize that our intent was not clear and could be misinterpreted. Therefore, we have expanded final § § 404.1616 and 416.1016 to provide explicitly that acceptable medical sources other than physicians (*i.e.,* licensed optometrists, licensed podiatrists, and qualified speech-language pathologists) may function as medical consultants, but their authority in helping to make determinations and in providing opinions about medical equivalence and elsewhere is limited to their area of expertise.

Although it was unclear from the comment which disability redesign proposals one of the commenters referred to, we disagree with that comment. We believe that providing State agencies with the opportunity to use these additional specialists in a consulting capacity will improve their ability to make timely, accurate decisions.

With regard to the comment asking us to include the various ways we make findings of medical equivalence, we believe that the change is outside the scope of our authority because we did not propose the change. However, we will consider this comment when we propose other changes in the future.

In making the revisions to § § 404.1616 and 416.1016 in response to these comments, we added new paragraphs with letter and number designations. Therefore, we had to redesignate the paragraph letters and numbers from the prior rules that describe qualified psychologists. Apart from the change in the designations of the letters and numbers of the paragraphs, we did not change the language of those paragraphs.

In response to the last comment, regarding review by a psychiatrist of any case involving a combination of mental and physical disorders, we are providing in final paragraph (c) of § § 404.1616 and 416.1016 that a physician must evaluate the case record, except when the mental impairment alone would justify a finding of disability. However, we do not agree with the commenter that a psychiatrist will be the best physician to assess a combination of mental and physical disorders in all claims. There are claims in which it is more appropriate to use other specialists for the overall review in consultation with a psychiatrist or psychologist.

Comment: One of the foregoing commenters also pointed out that the first sentence of prior § § 404.1616 and 416.1016 seemed incomplete. The commenter noted that the heading of these regulations referred to ''*Medical or psychological consultant*,'' yet the first sentence referred only to medical consultants. The commenter provided a recommended revision that would include psychological consultants.

Response: We adopted the comment, although not in the exact way suggested by the commenter. In response to this, and the comments already noted, we have revised the entire sections to clarify their provisions.

Comment: One commenter suggested that we revise proposed § § 404.1513(e) and 416.913(e) (prior § § 404.1513(d) and 416.913(d)) to read: ''The medical evidence, including the clinical and laboratory find[ing]s, and other evidence from other sources must be complete and detailed enough to allow us to make a determination about whether you are disabled or blind.'' The commenter believed that it would be better to retain reference in our regulations to the medical and other evidence we need to establish the existence of a medically determinable impairment and its severity.

Response: We adopted the comment, but did not use the exact language proposed by the commenter. We believe that the commenter's proposed language could be misinterpreted to mean that each piece of evidence must be complete and detailed enough in and of itself for us to make the various findings listed in these regulation sections, or that we must try to obtain all available evidence, even after the record is complete and detailed enough for us to make a determination or decision.

Therefore, the final rule provides: ''The evidence in your case record, including the medical evidence from acceptable medical sources (containing the clinical and laboratory findings) and other medical sources not listed in paragraph (a), information you give us about your medical condition(s) and how it affects you, and other evidence from other sources, must be complete and detailed enough to allow us to make a determination or decision about whether you are disabled or blind.'' We changed the phrase near the end to ''make a determination or decision'' for technical reasons. Under our regulations § § 404.901 and 416.1401, the term ''determination'' means the initial or reconsidered determination, and the term ''decision'' means the decision made by an administrative law judge or the Appeals Council. This is not a substantive change in the rule, only a clarification of its meaning to show that it applies to all of our adjudicators.

Regulatory Procedures

Executive Order 12866

We have consulted with the Office of Management and Budget (OMB) and determined that these final rules do not meet the criteria for a significant regulatory action under Executive Order (E.O.) 12866. Therefore, they were not subject to OMB review. We have also determined that these rules meet the plain language requirements of E.O. 12866 and the President's memorandum of June 1, 1998.

Regulatory Flexibility Act

We certify that these final regulations will not have a significant economic impact on a substantial number of small entities because they affect only individuals. Therefore, a regulatory flexibility analysis as provided in the Regulatory Flexibility Act, as amended, is not required.

Paperwork Reduction Act

These final regulations impose no new reporting or recordkeeping requirements subject to OMB clearance. (Catalog of Federal Domestic Assistance Program Nos. 96.001, Social Security-Disability Insurance; 96.002, Social Security-Retirement Insurance; 96.004, Social Security-Survivors Insurance; 96.006, Supplemental Security Income.)

List of Subjects

20 CFR Part 404

Administrative practice and procedure, Blind, Disability benefits, Old-Age, Survivors, and Disability Insurance, Reporting and recordkeeping requirements, Social Security.

20 CFR Part 416

Administrative practice and procedure, Aged, Blind, Disability benefits, Public assistance programs, Reporting and recordkeeping requirements, Supplemental Security Income (SSI).

Dated: May 22, 2000.

Kenneth S. Apfel,

Commissioner of Social Security.

For the reasons set out in the preamble, subparts P and Q of part 404 and subparts I and J of part 416 of 20 CFR chapter III are amended as set forth below:

PART 404—FEDERAL OLD-AGE, SURVIVORS AND DISABILITY INSURANCE (1950—)

Subpart P—[Amended]

1. The authority citation for subpart P of part 404 continues to read as follows:

Authority: Secs. 202, 205(a), (b), and (d)–(h), 216(i), 221(a) and (i), 222(c), 223, 225, and 702(a)(5) of the Social Security Act (42 U.S.C. 402, 405(a), (b), and (d)–(h), 416(i), 421(a) and (i), 422(c), 423, 425, and 902(a)(5)); sec. 211(b), Pub. L. 104–193, 110 Stat. 2105, 2189.

§ 404.1503 [Amended]

2. Section 404.1503 is amended by removing the last sentence of paragraph (e).

3. Section 404.1512 is amended by revising paragraph (b)(4) to read as follows:

§ 404.1512 Evidence of your impairment.

* * * * *

(b) * * *

(4) Information from other sources, as described in § 404.1513(d);

* * * * *

4. Section 404.1513 is amended by revising the heading and paragraphs (a), (d), and (e) to read as follows:

§ 404.1513 Medical and other evidence of your impairment(s).

(a) *Sources who can provide evidence to establish an impairment.* We need evidence from acceptable medical sources to establish whether you have a medically determinable impairment(s). See § 404.1508. Acceptable medical sources are—

(1) Licensed physicians (medical or osteopathic doctors);

(2) Licensed or certified psychologists. Included are school psychologists, or other licensed or certified individuals with other titles who perform the same function as a school psychologist in a school setting, for purposes of establishing mental retardation, learning disabilities, and borderline intellectual functioning only;

(3) Licensed optometrists, for the measurement of visual acuity and visual fields (we may need a report from a physician to determine other aspects of eye diseases);

(4) Licensed podiatrists, for purposes of establishing impairments of the foot, or foot and ankle only, depending on whether the State in which the podiatrist practices permits the practice of podiatry on the foot only, or the foot and ankle; and

(5) Qualified speech-language pathologists, for purposes of establishing speech or language impairments only. For this source, ''qualified'' means that the speech-language pathologist must be licensed by the State professional licensing agency, or be fully certified by the State education agency in the State in which he or she practices, or hold a Certificate of Clinical Competence from the American Speech-Language-Hearing Association.

* * * * *

(d) *Other sources.* In addition to evidence from the acceptable medical sources listed in paragraph (a) of this section, we may also use evidence from other sources to show the severity of your impairment(s) and how it affects your ability to work. Other sources include, but are not limited to—

(1) Medical sources not listed in paragraph (a) of this section (for example, nurse-practitioners, physicians' assistants, naturopaths, chiropractors, audiologists, and therapists);

(2) Educational personnel (for example, school teachers, counselors, early intervention team members, developmental center workers, and daycare center workers);

(3) Public and private social welfare agency personnel; and

(4) Other non-medical sources (for example, spouses, parents and other caregivers, siblings, other relatives, friends, neighbors, and clergy).

(e) *Completeness.* The evidence in your case record, including the medical evidence from acceptable medical sources (containing the clinical and laboratory findings) and other medical sources not listed in paragraph (a) of this section, information you give us about your medical condition(s) and how it affects you, and other evidence from other sources, must be complete and detailed enough to allow us to make a determination or decision about whether you are disabled or blind. It must allow us to determine—

(1) The nature and severity of your impairment(s) for any period in question;

(2) Whether the duration requirement described in § 404.1509 is met; and

(3) Your residual functional capacity to do work-related physical and mental activities, when the evaluation steps described in § 404.1520(e) or (f)(1) apply.

5. Section 404.1526 is amended by revising the second and fourth sentences of paragraph (c) to read as follows:

§ 404.1526 Medical equivalence.

* * * * *

(c) *Who is a designated medical or psychological consultant.* * * * A medical consultant must be an acceptable medical source identified in § 404.1513(a)(1) or (a)(3) through (a)(5). * * * (See § 404.1616 for limitations on what medical consultants who are not physicians can evaluate and the qualifications we consider necessary for a psychologist to be a consultant.)

Subpart Q—[Amended]

6. The authority citation for subpart Q of part 404 continues to read as follows:

Authority: Secs. 205(a), 221, and 702(a)(5) of the Social Security Act (42 U.S.C. 405(a), 421, and 902(a)(5)).

§ 404.1615 [Amended]

7. Section 404.1615 is amended by removing the last sentence of paragraph (d).

8. Section 404.1616 is revised to read as follows:

§ 404.1616 Medical or psychological consultants.

(a) *What is a medical consultant*? A medical consultant is a person who is a member of a team that makes disability determinations in a State agency, as explained in § 404.1615, or who is a member of a team that makes disability determinations for us when we make disability determinations ourselves.

(b) *What qualifications must a medical consultant have*? A medical consultant must be an acceptable medical source identified in § 404.1513(a)(1) or (a)(3) through (a)(5); that is, a licensed physician (medical or osteopathic), a licensed optometrist, a licensed podiatrist, or a qualified speech-language pathologist. The medical consultant must meet any appropriate qualifications for his or her specialty as explained in § 404.1513(a).

(c) *Are there any limitations on what medical consultants who are not physicians can evaluate*? Medical consultants who are not physicians are limited to evaluating the impairments for which they are qualified, as described in § 404.1513(a). Medical consultants who are not physicians also are limited as to when they may serve as a member of a team that makes a disability determination. For example, a speech-language pathologist who is a medical consultant in a State agency may be a member of a team that makes a disability determination in a claim only if a speech or language impairment is the only impairment in the claim or if there is a combination of a speech or language impairment with another impairment but the speech or language impairment alone would justify a finding of disability. In all other cases, a physician will be a member of the team that makes a disability determination, except in cases in which this function may be performed by a psychological consultant as discussed in paragraph (f) of this section and § 404.1615(d).

(d) *What is a psychological consultant*? A psychological consultant is a psychologist who has the same responsibilities as a medical consultant explained in paragraph (a) of this section, but who can evaluate only mental impairments.

(e) *What qualifications must a psychological consultant have?* A psychological consultant used in cases where there is evidence of a mental impairment must be a qualified psychologist. For disability program purposes, a psychologist will not be considered qualified unless he or she:

(1) Is licensed or certified as a psychologist at the independent practice level of psychology by the State in which he or she practices; and

(2)(i) Possesses a doctorate degree in psychology from a program in clinical psychology of an educational institution accredited by an organization recognized by the Council on Post-Secondary Accreditation; or

(ii) Is listed in a national register of health service providers in psychology which the Commissioner of Social Security deems appropriate; and

(3) Possesses 2 years of supervised clinical experience as a psychologist in health service, at least 1 year of which is post masters degree.

(f) *Are there any limitations on what a psychological consultant can evaluate?* Psychological consultants are limited to the evaluation of mental impairments, as explained in § 404.1615(d). Psychological consultants also are limited as to when they can serve as a member of a team that makes a disability determination. They may do so only when a mental impairment is the only impairment in the claim or when there is a combination of a mental impairment with another impairment but the mental impairment alone would justify a finding of disability.

PART 416—SUPPLEMENTAL SECURITY INCOME FOR THE AGED, BLIND, AND DISABLED

Subpart I—[Amended]

9. The authority citation for subpart I of part 416 continues to read as follows:

Authority: Secs. 702(a)(5), 1611, 1614, 1619, 1631(a), (c), and (d)(1), and 1633 of the Social Security Act (42 U.S.C. 902(a)(5), 1382, 1382c, 1382h, 1383(a), (c), and (d)(1), and 1383b); secs. 4(c) and 5, 6(c)-(e), 14(a) and 15, Pub. L. 98–460, 98 Stat. 1794, 1801, 1802, and 1808 (42 U.S.C. 421 note, 423 note, 1382h note).

§ 416.903 [Amended]

10. Section 416.903 is amended by removing the last sentence of paragraph (e).

11. Section 416.912 is amended by revising paragraph (b)(4) to read as follows:

§ 416.912 Evidence of your impairment.

* * * * *

(b) * * *

(4) Information from other sources, as described in § 416.913(d);

* * * * *

12. Section 416.913 is amended by revising the heading and paragraphs (a), (d), and (e) to read as follows:

§ 416.913 Medical and other evidence of your impairment(s).

(a) *Sources who can provide evidence to establish an impairment.* We need evidence from acceptable medical sources to establish whether you have a medically determinable impairment(s). See § 416.908. Acceptable medical sources are—

(1) Licensed physicians (medical or osteopathic doctors);

(2) Licensed or certified psychologists. Included are school psychologists, or other licensed or certified individuals with other titles who perform the same function as a school psychologist in a school setting, for purposes of establishing mental retardation, learning disabilities, and borderline intellectual functioning only;

(3) Licensed optometrists, for the measurement of visual acuity and visual fields (see paragraph (f) of this section for the evidence needed for statutory blindness);

(4) Licensed podiatrists, for purposes of establishing impairments of the foot, or foot and ankle only, depending on whether the State in which the podiatrist practices permits the practice of podiatry on the foot only, or the foot and ankle; and

(5) Qualified speech-language pathologists, for purposes of establishing speech or language impairments only. For this source, ''qualified'' means that the speech-language pathologist must be licensed by the State professional licensing agency, or be fully certified by the State education agency in the State in which he or she practices, or hold a Certificate of Clinical Competence from the American-Speech-Language-Hearing Association.

* * * * *

(d) *Other sources.* In addition to evidence from the acceptable medical sources listed in paragraph (a) of this section, we may also use evidence from other sources to show the severity of your impairment(s) and how it affects your ability to work or, if you are a child, your functioning. Other sources include, but are not limited to—

(1) Medical sources not listed in paragraph (a) of this section (for example, nurse-practitioners,

physicians' assistants, naturopaths, chiropractors, audiologists, and therapists);

(2) Educational personnel (for example, school teachers, counselors, early intervention team members, developmental center workers, and daycare center workers);

(3) Public and private social welfare agency personnel; and

(4) Other non-medical sources (for example, spouses, parents and other caregivers, siblings, other relatives, friends, neighbors, and clergy).

(e) *Completeness.* The evidence in your case record, including the medical evidence from acceptable medical sources (containing the clinical and laboratory findings) and other medical sources not listed in paragraph (a) of this section, information you give us about your medical condition(s) and how it affects you, and other evidence from other sources, must be complete and detailed enough to allow us to make a determination or decision about whether you are disabled or blind. It must allow us to determine—

(1) The nature and severity of your impairment(s) for any period in question;

(2) Whether the duration requirement described in § 416.909 is met; and

(3) Your residual functional capacity to do work-related physical and mental activities, when the evaluation steps described in § 416.920(e) or (f)(1) apply, or, if you are a child, your functioning.

* * * * *

13. Section 416.926 is amended by revising the second and fourth sentences of paragraph (c) to read as follows:

§ 416.926 Medical equivalence for adults and children.

* * * * *

(c) Who is a designated medical or psychological consultant. * * * A medical consultant must be an acceptable medical source identified in § 416.913(a)(1) or (a)(3) through (a)(5). * * * (See § 416.1016 for limitations on what medical consultants who are not physicians can evaluate and the qualifications we consider necessary for a psychologist to be a consultant.)

* * * * *

Subpart J—[Amended]

14. The authority citation for subpart J of part 416 continues to read as follows:

Authority: Secs. 702(a)(5), 1614, 1631, and 1633 of the Social Security Act (42 U.S.C. 902(a)(5), 1382c, 1383, and 1383b).

§ 416.1015 [Amended]

15. Section 416.1015 is amended by removing the last sentence of paragraph (d).

16. Section 416.1016 is revised to read as follows:

§ 416.1016 Medical or psychological consultants.

(a) What is a medical consultant? A medical consultant is a person who is a member of a team that makes disability determinations in a State agency, as explained in § 416.1015, or who is a member of a team that makes disability determinations for us when we make disability determinations ourselves.

(b) What qualifications must a medical consultant have? A medical consultant must be an acceptable medical source identified in § 416.913(a)(1) or (a)(3) through (a)(5); that is, a licensed physician (medical or osteopathic), a licensed optometrist, a licensed podiatrist, or a qualified speech-language pathologist. The medical consultant must meet any appropriate qualifications for his or her specialty as explained in § 416.913(a).

(c) Are there any limitations on what medical consultants who are not physicians can evaluate? Medical consultants who are not physicians are limited to evaluating the impairments for which they are qualified, as described in § 416.913(a). Medical consultants who are not physicians also are limited as to when they may serve as a member of a team that makes a disability determination. For example, a speech-language pathologist who is a medical consultant in a State agency may be a member of a team that makes a disability determination in a claim only if a speech or language impairment is the only impairment in the claim or if there is a combination of a speech or language impairment with another impairment but the speech or language impairment alone would justify a finding of disability. In all other cases, a physician will be a member of the team that makes a disability determination, except in cases in which this function may be performed by a psychological consultant as discussed in paragraph (f) of this section and § 416.1015(d).

(d) What is a psychological consultant? A psychological consultant is a psychologist who has the same responsibilities as a medical consultant explained in paragraph (a) of this section, but who can evaluate only mental impairments.

(e) What qualifications must a psychological consultant have? A psychological consultant used in cases where there is evidence of a mental impairment must be a qualified psychologist. For disability program purposes, a psychologist will not be considered qualified unless he or she:

(1) Is licensed or certified as a psychologist at the independent practice level of psychology by the State in which he or she practices; and

(2)(i) Possesses a doctorate degree in psychology from a program in clinical psychology of an educational institution accredited by an organization recognized by the Council on Post-Secondary Accreditation; or

(ii) Is listed in a national register of health service providers in psychology which the Commissioner of Social Security deems appropriate; and

(3) Possesses 2 years of supervised clinical experience as a psychologist in health service, at least 1 year of which is post masters degree.

(f) Are there any limitations on what a psychological consultant can evaluate? Psychological consultants are limited to the evaluation of mental impairments, as explained in § 416.1015(d). Psychological consultants also are limited as to when they can serve as a member of a team that makes a disability determination. They may do so only when a mental impairment is the only impairment in the claim or when there is a combination of a mental impairment with another impairment but the mental impairment alone would justify a finding of disability.

[FR Doc. 00–13607 Filed 5–31–00; 8:45 am]

BILLING CODE 4191–02–U

DEPARTMENT OF HEALTH AND HUMAN SERVICES

Food and Drug Administration

21 CFR Part 5

Delegations of Authority and Organization; Food and Drug Administration

AGENCY: Food and Drug Administration, HHS.

ACTION: Final rule.

SUMMARY: The Food and Drug Administration (FDA) is amending the general redelegations of authority from the Commissioner of Food and Drugs to other officers of FDA. On June 20, 1999, the Commissioner of Food and Drugs restructured FDA ''to create a more streamlined and efficient Office of the Commissioner that will provide leadership without compromising programmatic effectiveness.'' In this restructuring, organizational

components were abolished and established and functions and personnel were transferred. Therefore, FDA is updating the delegations of authority regulations to reflect these changes and to delegate authority to positions in newly established components. FDA is also updating some position titles that may have been affected by previous reorganizations.

DATES: This rule is effective June 1, 2000.

FOR FURTHER INFORMATION CONTACT: Donna G. Page, Division of Management Programs (HFA–330), Food and Drug Administration, 5600 Fishers Lane, Rockville, MD 20857, 301–827–4816.

SUPPLEMENTARY INFORMATION: FDA is amending the delegations of authority regulations in various sections of 21 CFR part 5, subpart B, *Redelegations of Authority from the Commissioner of Food and Drugs*, to reflect the most significant changes that resulted from the June 20, 1999, restructuring. (See 64 FR 36361–36368, July 6, 1999, and 64 FR 38675, July 19, 1999.) The changes are as follows:

1. Updating the order of succession and who may perform all of the functions of the Commissioner of Food and Drugs.

2. Clarifying certain delegations of authority to appropriately reflect the Deputy Commissioners' authorities—there will be one principal Deputy Commissioner; however, two other Deputy Commissioner titles (International and Constituent Relations and Management and Systems) will be retained for incumbents only.

3. Amending certain delegations of authority and associated position titles to reflect the establishment of the Office of the Senior Associate Commissioner and the transfer of the Ombudsman, Executive Secretariat, Advisory Committee Oversight, Public Affairs, and Orphan Products Development functions to that component.

4. Removing position titles and delegations of authority associated with the abolished Office of Operations.

5. Removing references to the abolished Offices of Policy and External Affairs and updating position titles and associated delegations of authority, where appropriate, to reflect their conversions to the Office of Policy, Planning, and Legislation and the Office of International and Constituent Relations, respectively.

6. Updating position titles and associated delegations of authority to reflect the transfer of the health assessment, patent term extension, and scheduling controlled substances functions to the Center for Drug Evaluation and Research.

7. Updating position titles and associated delegations of authority to reflect the transfer of 21 CFR part 16 hearings functions; and to reflect the delegation of authority to make due diligence determinations, which pertain to patent term extensions, to the Office of the Ombudsman.

Unless stated otherwise, these authorities may not be further redelegated. Authority delegated to a position by title may be exercised by a person officially designated to serve in such position in an acting capacity or on a temporary basis, unless prohibited by a restriction in the document designating him/her as ''acting'' or unless not legally permissible.

List of Subjects in 21 CFR Part 5

Authority delegations (Government agencies), Imports, Organization and functions (Government agencies).

Therefore, under the Federal Food, Drug, and Cosmetic Act and under authority delegated to the Commissioner of Food and Drugs, 21 CFR part 5 is amended as follows:

PART 5—DELEGATIONS OF AUTHORITY AND ORGANIZATION

1. The authority citation for part 5 continues to read as follows:

Authority: 5 U.S.C. 504, 552, App. 2; 7 U.S.C. 138a, 2271; 15 U.S.C. 638, 1261–1282, 3701–3711a; 15 U.S.C. 1451–1461; 21 U.S.C. 41–50, 61–63, 141–149, 321–394, 467f, 679(b), 801–886, 1031–1309; 35 U.S.C. 156; 42 U.S.C. 241, 242, 242a, 242l, 242n 243, 262, 263, 264, 265, 300u–300u–5, 300aa–1; 1395y, 3246b, 4332, 4831(a), 10007–10008; E.O. 11921, 41 FR 24294, 3 CFR, 1977 Comp., p. 124–131; E.O. 12591, 52 FR 13414, 3 CFR, 1988 Comp., p. 220–223.

2. Section 5.20 is amended by revising paragraphs (b), (c), (e), (f), and (g); by redesignating paragraph (i) as paragraph (j); and by adding a new paragraph (i) to read as follows:

§ 5.20 General redelegations of authority from the Commissioner to other officers of the Food and Drug Administration.

* * * * *

(b) The following officials are authorized to perform all of the functions of the Commissioner of Food and Drugs and this authority may not be further redelegated:

(1) Deputy Commissioner;

(2) Associate Commissioner for Regulatory Affairs;

(3) Senior Associate Commissioner;

(4) Deputy Commissioner for Management and Systems;

(5) Senior Associate Commissioner for Policy, Planning, and Legislation; and

(6) Deputy Commissioner for International and Constituent Relations.

(c)(1) During the absence or disability of the Commissioner, or in the event of a vacancy in that position, the first official who is available in the following positions, or who has been designated by the Commissioner to act in such position, shall act as Commissioner:

(i) Deputy Commissioner;

(ii) Associate Commissioner for Regulatory Affairs; or

(iii) Senior Associate Commissioner.

(2) This authority may not be further redelegated. However, for a planned period of absence, the Commissioner of Food and Drugs (or someone ''acting'' on his/her behalf) may specify a different order of succession.

* * * * *

(e)(1) The Senior Associate Commissioner is authorized to make determinations that advisory committee meetings are concerned with matters listed in 5 U.S.C. 552(b) and therefore may be closed to the public in accordance with § 5.10(a)(18). This authority may not be further redelegated.

(2) The Senior Associate Commissioner is authorized to perform other associated advisory committee functions (e.g., establishing technical and scientific review groups (advisory committees)); appointing and paying members; approving waivers to appoint members to established advisory committees; renewing and rechartering of established advisory committees; amending charters of established advisory committees; and terminating established advisory committees. This authority may not be further redelegated.

(3) The Senior Associate Commissioner is authorized to approve conflict of interest waivers for special Government employees serving on advisory committees in accordance with 18 U.S.C. 208(b)(3), as amended. This authority may not be further redelegated.

(4) The Senior Associate Commissioner is authorized to select temporary members to advisory committees if such voting members are serving on an advisory committee managed by another center. This authority may not be further redelegated.

(f)(1) The Senior Associate Commissioner for Policy, Planning, and Legislation and the Associate Commissioner for Policy are authorized to perform any of the functions of the Commissioner of Food and Drugs with respect to the issuance of **Federal Register** notices and proposed and final

regulations of the Food and Drug Administration. This authority may not be further redelegated.

(2) The Senior Associate Commissioner for Policy, Planning, and Legislation and the Associate Commissioner for Policy are authorized to issue responses to the following matters under part 10 of this chapter as follows, and this authority may not be further redelegated:

(i) Requests for waiver, suspension, or modification of procedural requirements under § 10.19 of this chapter;

(ii) Citizen petitions under § 10.30 of this chapter;

(iii) Petitions for reconsideration under § 10.33 of this chapter;

(iv) Petitions for stay under § 10.35 of this chapter; or

(v) Requests for advisory opinions under § 10.85 of this chapter.

(3) With respect to any matter delegated to the Senior Associate Commissioner for Policy, Planning, and Legislation and the Associate Commissioner for Policy under paragraph (f) of this section, the Senior Associate Commissioner for Policy, Planning, and Legislation and the Associate Commissioner for Policy are authorized to perform the function of the Commissioner of Food and Drugs under §§ 10.40, 10.45, 10.50, 10.55, 10.60, 10.65, 10.80, 10.90, and 10.95 of this chapter and of the Deputy Commissioner under § 10.206(g) and (h) of this chapter. This authority may not be further redelegated.

(4) The Senior Associate Commissioner for Policy, Planning, and Legislation and the Associate Commissioner for Policy are authorized under the Regulatory Flexibility Act (5 U.S.C. 605(b)) to certify that a proposed or final rule, if issued, will not have a significant economic impact on a substantial number of small entities. This authority may be further redelegated.

(g) The following officials are authorized to perform all of the functions of the officials under them in their respective offices, and this authority may not be further redelegated:

(1) Senior Associate Commissioner;

(2) Deputy Commissioner for International and Constituent Relations;

(3) Deputy Commissioner for Management and Systems; or

(4) Senior Associate Commissioner for Policy, Planning, and Legislation.

* * * * *

(i) The Deputy Commissioner is authorized to perform the due diligence determinations and informal hearings functions under 35 U.S.C. 156(d)(2)(B)(ii), as amended, relative to patent term extensions. This authority may not be further redelegated.

* * * * *

3. Section 5.22 is amended by revising paragraphs (a)(1), (a)(2), (a)(3), (a)(6), (a)(7), (a)(10)(ii), (a)(11)(ii), (a)(12)(ii), (b)(1), (b)(2), and (b)(3); by redesignating paragraph (c) as paragraph (d) and revising newly redesignated paragraph (d); and by adding new paragraph (c) to read as follows:

§ 5.22 Certification of true copies and use of Department seal.

(a) * * *

(1) The Deputy Commissioner, the Deputy Commissioner for International and Constituent Relations, and the Deputy Commissioner for Management and Systems.

(2) The Senior Associate Commissioners, the Associate and Deputy Associate Commissioners, and the Chief Counsel and Deputies.

(3) The Director, Office of the Executive Secretariat, Office of the Senior Associate Commissioner, Office of the Commissioner.

* * * * *

(6)(i) The Director, Office of Human Resources and Management Services, Office of Management and Systems, Office of the Commissioner.

(ii) The Director, Division of Management Programs, Office of Human Resources and Management Services, Office of Management and Systems, Office of the Commissioner.

(iii) The Chief, Dockets Management Branch, Division of Management Programs, Office of Human Resources and Management Services, Office of Management and Systems, Office of the Commissioner.

(7)(i) The Associate Commissioner for Public Affairs, Office of Public Affairs, Office of the Senior Associate Commissioner, Office of the Commissioner.

(ii) The Director, Freedom of Information Staff, Office of Public Affairs, Office of the Senior Associate Commissioner, Office of the Commissioner.

* * * * *

(10) * * *

(ii) The Director and Deputy Director, Office of Management and Communications, Center for Veterinary Medicine (CVM).

* * * * *

(11) * * *

(ii) The Director and Deputy Director, Office of Management and Communications, CVM.

* * * * *

(12) * * *

(ii) The Director, Office of Management, Facilities, and Research Support, NCTR.

* * * * *

(b) * * *

(1) The Deputy Commissioner, the Deputy Commissioner for International and Constituent Relations, and the Deputy Commissioner for Management and Systems.

(2) The Senior Associate Commissioners, the Associate and Deputy Associate Commissioners, and the Chief Counsel and Deputies.

(3) The Director, Office of Human Resources and Management Services, Office of Management and Systems, Office of the Commissioner.

(c) The authorities under § 5.22 (a) and (b), where appropriate, may be further redelegated by the Deputy Commissioners; Senior Associate Commissioners; Associate Commissioner for Regulatory Affairs and Deputy; Chief Counsel and Deputies; Center Directors and Deputies; and Executive Officers (i.e., Executive Assistant, Office of the Commissioner; Director, Office of Management, CBER; Director, Office of Management, CDER; Director, Office of Management and Systems, CFSAN; Director, Office of Systems and Management, CDRH; Director, Office of Management and Communications, CVM; Director, Office of Management, Facilities, and Research Support, NCTR; and the Director, Office of Resource Management, ORA).

(d) The Chief, Regulations Editorial Section; Regulations Policy and Management Staff; Office of Policy, Planning, and Legislation; Office of the Commissioner, and his/her alternates are authorized to certify true copies of **Federal Register** documents. The Chief, Regulations Editorial Section; Regulations Policy and Management Staff; Office of Policy, Planning, and Legislation; and the Office of the Commissioner may designate alternates as required.

4. Section 5.23 is amended by revising paragraphs (a)(1), (a)(2), (a)(4), and (d).

§ 5.23 Disclosure of official records.

(a) * * *

(1) The Deputy Commissioner, the Deputy Commissioner for International and Constituent Relations, the Deputy Commissioner for Management and Systems, Senior Associate Commissioners, Associate and Deputy Associate Commissioners.

(2)(i) The Executive Assistant to the Commissioner, Office of the Commissioner.

(ii) The Director, Office of the Executive Secretariat, Office of the

Senior Associate Commissioner, Office of the Commissioner.

* * * * *

(4)(i) The Director, Office of Human Resources and Management Services, Office of Management and Systems, Office of the Commissioner.

(ii) The Director, Division of Management Programs, Office of Human Resources and Management Services, Office of Management and Systems, Office of the Commissioner.

(iii) The Chief, Dockets Management Branch, Division of Management Programs; Office of Human Resources and Management Services, Office of Management Services, Office of the Commissioner.

* * * * *

(d) The Director, Office of Resource Management, Office of Regulatory Affairs is authorized to sign affidavits regarding the presence or absence of records in the files of that office.

* * * * *

5. Section 5.25 is amended by revising paragraphs (a)(7) and (c) to read as follows:

§ 5.25 Research, investigation, and testing programs and health information and health promotion programs.

(a) * * *

(7) The Director, Office of Orphan Products Development, Office of the Senior Associate Commissioner, Office of the Commissioner.

* * * * *

(c) The Deputy Commissioner for Management and Systems, Office of Management and Systems, Office of the Commissioner; the Director and Deputy Director, Office of Facilities, Acquisitions, and Central Services, Office of Management and Systems, Office of the Commissioner; the Director, Division of Contracts and Procurement Management, Office of Facilities, Acquisitions, and Central Services, Office of Management and Systems, Office of the Commissioner; and the Chief Grants Management Officer and the Grants Management Officer, Division of Contracts and Procurement Management, Office of Facilities, Acquisitions, and Central Services, Office of Management Systems, Office of the Commissioner are authorized to sign and issue all notices of grant awards and amendments thereto and sign and issue notices of suspension and termination thereof for grants approved under the authority delegated in paragraphs (a) and (b) of this section.

* * * * *

6. Section 5.27 is revised to read as follows:

§ 5.27 Patent term extensions for human drug products, medical devices, and food and color additives; and due diligence determinations.

(a) The Director, Center for Drug Evaluation and Research (CDER) and the Associate Director for Policy, CDER, are authorized to perform the functions delegated to the Commissioner of Food and Drugs under 35 U.S.C. 156, as amended, except for making due diligence determinations and holding of informal hearings under 35 U.S.C. 156(d)(2)(B).

(b) The Chief Mediator and Ombudsman, Office of the Ombudsman, Office of the Senior Associate Commissioner, Office of the Commissioner, is authorized to perform the functions delegated to the Commissioner to make due diligence determinations under 35 U.S.C. 156(d)(2)(B), as amended, except for holding of informal hearings under 35 U.S.C. 156(d)(2)(B)(ii).

7. Section 5.30 is amended by revising paragraph (c)(1) to read as follows:

§ 5.30 Hearings.

* * * * *

(c) * * *

(1) The Chief Mediator and Ombudsman, Office of the Ombudsman, Office of the Senior Associate Commissioner, Office of the Commissioner.

* * * * *

8. Section 5.32 is revised to read as follows:

§ 5.32 Authority relating to determination of product classification and assignment of primary jurisdiction.

The Chief Mediator and Ombudsman, Office of the Ombudsman, Office of the Senior Associate Commissioner, Office of the Commissioner, as product jurisdiction officer is authorized to make a determination under section 563 of the Federal Food, Drug, and Cosmetic Act (the act) respecting the classification of a product as a drug, biological product, device, or a combination product subject to section 503(g) of the act, and to assign primary responsibility respecting the organizational component of the Food and Drug Administration that will regulate the product.

9. Section 5.34 is amended by revising paragraph (a) to read as follows:

§ 5.34 Authority to select temporary voting members for advisory committees and authority to sign conflict of interest waivers.

(a) Each center director is authorized to select members of, and consultants to, scientific and technical FDA advisory committees under that center's management to serve temporarily as voting members on another advisory committee under that center's management when expertise is required that is not available among current voting standing members of a committee or to comprise a quorum when, because of unforeseen circumstances, a quorum will be lacking. When additional voting members are added to a committee to provide needed expertise not available among current voting standing members of a committee, a quorum will be based on the total of regular and added members. Authority to select temporary voting members to advisory committees if such voting members are serving on an advisory committee managed by another center has not been redelegated. This authority will continue to be exercised by the Commissioner or the Senior Associate Commissioner, Office of the Commissioner.

* * * * *

10. Section 5.58 is amended by revising introductory text of paragraphs (a) and (b) to read as follows:

§ 5.58 Orphan products.

(a) The Director, Office of Orphan Products Development, Office of the Senior Associate Commissioner, Office of the Commissioner, is authorized to issue notices, and amendments thereto, inviting sponsorship for orphan products (human and animal drugs, biological products, and medical devices) and submission of:

* * * * *

(b) The Director, Office of Orphan Products Development, Office of the Senior Associate Commissioner, Office of the Commissioner, is authorized:

* * * * *

11. Section 5.81 is revised to read as follows:

§ 5.81 Responses to Drug Enforcement Administration temporary scheduling notices.

The Director, Center for Drug Evaluation and Research (CDER) and the Director, Executive Operations Staff, Office of the Center Director, CDER are authorized to provide responses to the Drug Enforcement Administration's temporary scheduling notices under the Controlled Substances Act, as amended (Title II of the Comprehensive Drug Abuse Prevention and Control Act of 1970, 21 U.S.C. 811(h)(4), as amended hereafter). The delegation excludes the authority to submit reports to Congress. Further redelegation may only be authorized with the Commissioner of Food and Drugs' approval.

Dated: May 17, 2000.

Margaret M. Dotzel,

Acting Associate Commissioner for Policy.

[FR Doc. 00–13586 Filed 5–31–00; 8:45 am]

BILLING CODE 4160–01–F

DEPARTMENT OF HEALTH AND HUMAN SERVICES

Food and Drug Administration

21 CFR Part 312

[Docket No. 97N–0030]

Investigational New Drug Applications; Amendment to Clinical Hold Regulations for Products Intended for Life-Threatening Diseases and Conditions

AGENCY: Food and Drug Administration, HHS.

ACTION: Final rule.

SUMMARY: The Food and Drug Administration (FDA) is amending the regulations governing investigational new drug applications (IND's) to permit FDA to place a clinical hold on one or more studies under an IND involving a drug that is intended to treat a life-threatening disease or condition affecting both genders. The amendments permit the agency to place a clinical hold on such studies if *men or women* with reproductive potential who have the disease or condition are otherwise eligible but are categorically excluded from participation solely because of a perceived risk or potential risk of reproductive or developmental toxicity from use of the investigational drug. This rule was developed in response to the past practice of excluding women with reproductive potential from early clinical trials because of a perceived risk or potential risk of reproductive or developmental toxicity. The final rule does not impose requirements to enroll or recruit a specific number of men or women with reproductive potential.

DATES: The regulation is effective July 31, 2000.

FOR FURTHER INFORMATION CONTACT: Andrea C. Masciale, Center for Drug Evaluation and Research (HFD–7), Food and Drug Administration, 5600 Fishers Lane, Rockville, MD 20857, 301–594–2041.

SUPPLEMENTARY INFORMATION:

I. Background

In the **Federal Register** of September 24, 1997 (62 FR 49946), FDA proposed to amend its regulations in § 312.42 (21 CFR 312.42) governing clinical holds. A clinical hold is an order that FDA may issue to a sponsor to delay a proposed clinical investigation or to suspend an ongoing investigation for the development of a new drug or biological product (§ 312.42(a)). Under the proposed amendments, FDA could impose a clinical hold on any proposed or ongoing clinical trial for a life-threatening disease or condition that affects both genders if men or women with reproductive potential who have the disease or condition being studied were excluded from eligibility in any phase of the clinical investigation solely because of a risk or potential risk of reproductive toxicity or developmental toxicity from use of the investigational drug. As explained in the preamble to the proposed rule (62 FR 49946 at 49947), the amendments address the exclusion from clinical trials of members of either gender who have a life-threatening disease or condition. Because such exclusions have in the past been applied primarily to women, however, it is expected that the impact of the amendments will be to ensure that women who have a life-threatening disease or condition are not categorically excluded from investigational trials of drug products for that disease or condition solely because of a perceived risk or potential risk of reproductive or developmental toxicity from the use of the investigational drug. FDA provided 90 days for public comment on the proposed rule.

II. Description of the Final Rule

FDA regulations identify the grounds for placing a clinical hold on proposed or ongoing phase 1 studies (§ 312.42(b)(1)) and on proposed or ongoing phase 2 or phase 3 studies (§ 312.42(b)(2)). FDA is amending these clinical hold regulations to provide an additional ground for placing a phase 1, phase 2, or phase 3 study on clinical hold. Under these amendments, FDA may impose a clinical hold on any proposed or ongoing clinical trial for a life-threatening disease or condition that affects both genders if men or women with reproductive potential who have the disease being studied are excluded from eligibility in any phase of the investigation because of a risk or potential risk of reproductive or developmental toxicity from use of the investigational drug.

The proposed rule refers to studies under an IND involving a drug that is intended to treat a life-threatening illness or disease affecting both genders. As stated in the proposal (62 FR 49946 at 49951), the definition of life-threatening illness or disease is intended to be consistent with the agency's IND regulations (§ 312.81(a)(1)). Under the IND regulations, the term life-threatening is applied to ''conditions'' or ''diseases.'' To remain consistent with current terminology, the agency is amending the final rule to refer to ''life-threatening diseases or conditions.''

The clinical hold under these amendments would not apply to clinical studies conducted under special circumstances, such as studies pertinent to only one gender (e.g., to evaluate the excretion of a drug in semen or its effects on menstrual function).

As described in the proposed rule, a clinical hold would not be applied to a clinical study conducted in men, as long as a study that does not exclude subjects with reproductive potential has been planned or is being conducted in women. The agency expects that in an active IND, studies that do not exclude women or men with reproductive potential will be underway or will commence in a timely manner. To clarify this expectation, the final rule has been modified to state that a clinical hold would not be ordered for a study conducted only in men or only in women, as long as a study that does not exclude members of the other gender with reproductive potential is being conducted concurrently or will take place within a reasonable time agreed upon by the agency (§ 312.42(b)(1)(v)(B)). FDA expects that a discussion between the sponsor and the agency concerning a reasonable time for carrying out the study would take place at a pre-IND meeting or with the submission of the IND.

As stated in the proposed rule, this amendment to the IND regulations would not apply to clinical studies conducted exclusively in healthy volunteers (62 FR 49946 at 49951). The final rule has been modified in § 312.42(b)(1)(v) by adding paragraph (C) to clarify that the rule applies to clinical investigations that are conducted only in subjects who have the disease or condition that the drug is intended to treat.

III. Comments on the Proposed Rule

FDA received 26 letters, including letters from manufacturers, individuals, advocacy groups, and trade associations, commenting on the proposed rule. The majority of comments supported FDA's proposal to prohibit the exclusion of women from investigational studies through the clinical hold mechanism. Many comments suggested changes that would have narrowed or broadened the proposal.

A. General Comments

1. Several comments indicated that if women with reproductive potential are capable of acquiring a disease, such women should be included in clinical trials regardless of their ability to become pregnant. Many comments stated that FDA's goal of ensuring that women with reproductive potential who have a life-threatening disease are not categorically excluded from trials in the future is ''an unassailable position.'' Another comment strongly recommended that FDA finalize the proposed rule, noting that despite FDA's 1993 ''Guideline for the Study and Evaluation of Gender Differences in the Clinical Evaluation of Drugs,'' there has been little improvement in opening enrollments (especially in phase 1 and phase 2 trials) to fertile women and in increasing enrollment of women overall. The agency agrees with these comments.

2. One comment stated that women of reproductive age with life-threatening diseases who are fully informed should be included in all stages of product development. The same comment urged FDA to closely monitor the implementation of the new rule and to continue the development of policies that would minimize risks while allowing productive research on women and men.

FDA will monitor the implementation of this final rule as part of the general IND process and will continue to encourage research on the treatment and prevention of diseases and conditions in all individuals.

B. Applicability/Scope of the Proposed Rule

3. Section 312.42(a) states that ''[w]hen an ongoing study is placed on a clinical hold, * * * patients already in the study should be taken off therapy involving the investigational drug unless specifically permitted by FDA in the interest of patient safety.'' One comment noted that FDA did not define ''patient safety'' in the preamble to the proposed rule. The comment requested that the agency consider indirect harm to patients in an evaluation of whether continuation of therapy involving an investigational drug is in the interest of patient safety.

Generally, studies are placed on clinical hold because FDA considers it unsafe to carry the studies forward. In the present case, the hold does not imply such a conclusion. FDA generally intends to place trials that inappropriately exclude individuals with reproductive potential on hold at the time of protocol submission. However, if a trial that has begun is placed on clinical hold under this rule, it usually should not be necessary to stop an individual subject's treatment.

4. Three comments discussed the definition of the term ''life-threatening.'' Two comments expressed concern that the definition could be construed to include acute and chronic illnesses, such as status asthmaticus, epilepticus, anaphylaxis, diabetes, hypertension, and severe hypercholesterolemia. One proposed narrowing the definition to encompass only those diseases identified in the proposed rule as being of concern to FDA. The third comment suggested broadening the definition to include chronic conditions such as epilepsy.

The definition of life-threatening is not intended to be limited to only those diseases and conditions where death is imminent, or broad enough to include acute or chronic diseases where death from the disease or condition is unlikely. The definition of life-threatening encompasses any disease or condition where the likelihood of death is high unless the course of the disease is interrupted. This rule is grounded in FDA's belief that people who are suffering from a disease or condition that is life-threatening despite available therapy should have an opportunity to participate in a clinical trial intended to address the disease or condition. Although many acute and chronic illnesses are adequately controlled by existing therapies, some of these illnesses may have stages or aspects that continue to carry a high likelihood of death despite existing therapies. Such a condition or disease would be considered life-threatening within the meaning of this rule.

5. The agency received two comments addressing the need to balance access to investigational drugs and risks to study participants. One comment stated that while risks can be minimized through mechanisms such as informed consent and study design, the rule needs to be sufficiently flexible to address exceptional circumstances where potential risks of a drug may outweigh the potential benefit. Another comment stated that balancing the need for access to investigational drugs and minimizing patient risk would be better served by data-driven dialogue between sponsors and FDA than by the rule.

The agency acknowledges that balancing access and patient risk is complex and that the specific circumstances of the trial may be pertinent. Physicians and patients are generally willing to accept greater risks from use of medical products that treat life-threatening diseases or conditions than they would accept from those that treat less serious conditions (53 FR 41516 at 41518, October 21, 1988; 62 FR 49946 at 49949). Nonetheless, institutional review boards (IRB's) must still determine that risks to study participants are minimized by the use of procedures consistent with sound research design and that the risks to study participants are reasonable in relation to anticipated benefits (21 CFR 56.111(a)(1) and (a)(2)).

FDA provides frequent opportunities for sponsors to meet with the agency to discuss the details of clinical investigations. For example, the clinical hold regulations specifically encourage discussion about deficiencies in an investigation. FDA will attempt to discuss and satisfactorily resolve the matter with the sponsor before issuing the clinical hold order (§ 312.42(c)). As stated in the proposed rule, a study would be placed on clinical hold only as a last resort (62 FR 49946 at 49953).

6. The agency received divergent comments about the scope of the rule. Two comments stated that FDA should expand the regulation to include all clinical trials.

The agency declines the suggestion to expand the scope of the regulation to include all trials. At this time, there is an ethical basis for seeking to ensure that women with reproductive potential are not categorically excluded from trials of products being developed to treat life-threatening diseases and conditions. As discussed in the preamble to the proposed rule (62 FR 49946 at 49949), FDA has concluded that all trials involving patients with life-threatening diseases or conditions should, for the purposes of the rule, be considered to have therapeutic benefit. The ethical principle of justice does not support categorical exclusion of one group that might benefit from participation in clinical research for life-threatening diseases and conditions. Although similar considerations might apply to all human drug trials, the agency recognizes that the potential detriment of being excluded from a trial is greater when the subjects have life-threatening diseases or conditions.

7. One comment stated that because all new drugs are potentially teratogenic, FDA should not permit administration of any drug to women with reproductive potential until there is evidence of general safety and effectiveness from phase 1 and phase 2 trials.

Although a risk or potential risk of developmental toxicity might exist from participation in a study, benefits that might accrue to a woman with reproductive potential who has the life-threatening disease or condition could

outweigh such a risk. Furthermore, such risks can be reduced or eliminated (62 FR 49946 at 49949).

The risk of fetal exposure is eliminated by preventing pregnancy. Sponsors and IRB's can require the use of pregnancy testing to detect unsuspected pregnancy prior to initiation of study treatment and at intervals during the course of drug exposure. When the study design permits, sponsors can minimize potential fetal exposure in the short term by timing studies to coincide with the early follicular phase of the menstrual cycle. Women and men can eliminate the possibility of pregnancy through abstinence and can reduce the possibility of pregnancy through the use of one or more methods of contraception for the duration of drug exposure (62 FR 49946 at 49950). The agency finds that exclusion of women from early trials is not medically necessary because the risk of fetal exposure can be minimized. Initial determinations about whether the risk is adequately addressed are properly left to patients, physicians, local IRB's, and sponsors, with appropriate review and guidance by FDA (58 FR 39406 at 39408, July 22, 1993).

8. The agency received multiple comments stating that historically, IRB's have been a source of exclusionary policies without scientific justification, and FDA needs to be active in ensuring that IRB's do not wrongly exclude women with reproductive potential. One comment suggested that FDA adopt new procedures to carefully monitor IRB's and encouraged quick enforcement of this rule if women with reproductive potential are inappropriately excluded.

Initial determinations about risk and other aspects of the safety of proposed investigations are properly left to patients, physicians, sponsors, and local IRB's with appropriate review and guidance by FDA (58 FR 39408). FDA has established procedures for IRB's at part 56 (21 CFR part 56). Although IRB's play a role in the determination of eligibility criteria for investigations, FDA plans to ensure compliance with this rule primarily through review of IND submissions for drugs that are intended to treat life-threatening diseases and conditions. If the agency makes an initial determination that unwarranted restrictions were placed on the eligibility of women, FDA will attempt to discuss and satisfactorily resolve the matter with the sponsor prior to issuing the clinical hold order (§ 312.42(c)). If a satisfactory resolution cannot be found, an IND may be placed on clinical hold.

9. Another comment recommended that FDA encourage trial sponsors and IRB's to broadly interpret ''de facto exclusion'' to avoid unnecessarily excluding women with reproductive potential.

The exclusion of subjects with reproductive potential addressed by this rule includes both explicit exclusion and de facto exclusion. De facto exclusion would result from study criteria that are not essential to accomplish the goals of the study and that have the effect of precluding enrollment of participants with reproductive potential (e.g., requiring sterilization or requiring weight or other physical characteristics).

10. Two comments suggested that the agency strengthen its policies by requiring that data collected under IND's be analyzed by gender.

The suggestions are outside the scope of this rulemaking, but in the **Federal Register** of February 11, 1998 (63 FR 6854), FDA issued the demographic subgroup rule, which revised new drug application (NDA) content and format regulations at 21 CFR 314.50(d)(5). The regulation requires that effectiveness and safety data be presented in each NDA for demographic subgroups, including gender subgroups. This regulation will ensure that data collected under IND's and submitted to the agency will be analyzed by gender.

11. Many comments expressed disappointment that the proposed rule did not contain requirements to enroll or recruit a significant number of women with reproductive potential in clinical trials. Several other comments misunderstood the intent of the rule and questioned its adequacy in ensuring appropriate enrollment and retention of women in trials. An additional comment stated that the proposed rule did not address requirements for appropriate recruitment strategies to ensure that low-income women are represented in clinical trials.

As stated in the preamble to the proposed rule, the primary goal of the rule is to ensure that women with reproductive potential who have a life-threatening disease or condition are not categorically excluded from participation in clinical investigations because of their reproductive capacity (62 FR 49946 at 49947). This rule is thus concerned with eligibility criteria for individual studies. Issues related to the enrollment of significant numbers of women with reproductive potential in clinical trials are under consideration by the agency.

The demographic subgroup rule also includes a requirement (21 CFR 312.33(a)(2)) that IND annual reports provide demographic data on subjects of trials. Although the demographic subgroup rule does not require the inclusion of a particular number of individuals from specific subgroups, it will further focus sponsors' attention throughout the drug development process on clinical trial enrollment. The demographic subgroup rule should also help sponsors better evaluate in their applications the safety and efficacy profiles of drugs for various subgroups, including gender.

12. The agency received one comment stating that pregnant women have the same right to make informed decisions about their own treatment as other women with reproductive potential. The comment concluded by recommending that the proposed regulation also apply if pregnant women are excluded from clinical trials for life-threatening diseases.

For the purpose of this rulemaking, FDA does not intend the phrase ''women with reproductive potential'' to include pregnant women (62 FR 49946 at 49947). The agency does not question the ability of pregnant women to provide informed consent. There is, however, increased complexity in conducting clinical trials with pregnant women because of their changing physiology. FDA will continue to explore this issue in other forums.

13. One comment recommended that the final rule clearly state that it applies to the exclusion of men in clinical trials and that the agency will carefully monitor the use of the clinical hold in studies that exclude men.

As explained in the preamble to the proposed rule, although men have rarely been excluded from studies because of reproductive potential, the rule addresses the exclusion from clinical trials of members of either gender who have a life-threatening disease (62 FR 49946 at 49947). Section 312.42(b)(1)(v) and (b)(2)(i) state that FDA may place any phase of a proposed or ongoing investigation on clinical hold if

> [t]he IND is for the study of an investigational drug intended to treat a life-threatening disease or condition that affects both genders, and *men or women* with reproductive potential who have the disease being studied are excluded from eligibility in any phase of clinical investigation because of a risk or potential risk of reproductive * * * or developmental * * * toxicity * * *.

(emphasis added). As part of the IND process, FDA reviews protocol inclusion and exclusion criteria, including gender-related eligibility.

14. In the preamble to the proposed rule, the agency stated that it is important for potential study participants to be provided with an

opportunity to discuss their involvement in a clinical trial with their sexual partner. FDA further stated that when deciding whether to participate in a clinical trial for an investigational drug, potential participants should be able to weigh the potential risks of their participation in consultation with their spouse or partner, their health care provider, and their researcher (62 FR 49946 at 49950). Two comments expressed concern that these statements could be construed to mean that such consultation with a partner must occur prior to enrollment. One comment indicated that many women are not sufficiently empowered to resist intimidation by their partner to make an independent decision if their partner agrees or disagrees with participation in a clinical trial. The second comment indicated that not all potential participants have one sexual partner and that no one should be excluded from participating in a clinical trial because of multiple sexual partners. This comment also indicated that women who are unable to negotiate the terms of sexual behavior or the cooperation of their partner(s) with contraceptives should not be categorically excluded from participation in clinical trials.

Women and men can eliminate the possibility of pregnancy through abstinence and can reduce the possibility of pregnancy through the use of contraception for the duration of drug exposure, which may exceed the length of the clinical trial. The cooperation of an individual's sexual partner(s) may be needed to ensure that abstinence occurs or that appropriate contraceptive methods are used, but such cooperation is not always essential. Potential participants should be able to make autonomous decisions about contraception. Potential study participants should discuss with investigators their ability to maintain adequate contraception prior to determining whether they should participate in the study. The rule is not intended to ignore the risks associated with an unintended pregnancy, including the potential for developmental toxicity; rather it is based on the view that IRB's, investigators, and subjects can manage those risks.

Risks to participants in early clinical trials can also be reduced through the proper use of the informed consent process. Potential participants who are heterosexually active must be aware of the need to ensure that appropriate contraceptive measures are taken to prevent pregnancy and of any additional risks in the event of pregnancy. While individuals should be encouraged to involve their sexual partner(s) in their decisionmaking process, the ultimate decision concerning whether to volunteer for a clinical trial should rest with the individual.

C. Reduction of Risks to Participants

15. The agency received several comments on the discussion of the informed consent process in the preamble to the proposed rule. The majority of comments concerning informed consent supported the agency's reliance on this process and other mechanisms to protect participants in early clinical trials. Two comments stated that the informed consent process may encourage potential study participants to act responsibly and make their own risk-benefit analysis. One comment stated that participants need to be adequately informed about available information and about areas in which data are lacking. Two other comments noted the importance of animal reproductive toxicity studies and the inclusion of information obtained as a result of such studies in the informed consent process.

There are a number of mechanisms, including the proper use of informed consent, to protect participants in clinical trials. Sponsors, investigators, and IRB's have responsibility for ensuring participant safety and protecting the rights of participants. FDA's informed consent regulations require that potential study participants be adequately informed that the study involves research, that there may be foreseeable risks or discomforts, and that there may be unforeseeable risks, such as potential risks to the embryo or fetus if a female study participant becomes pregnant (§ 50.25(b)(1) (21 CFR 50.25)(b)(1)). The existence of appropriate alternative procedures or courses of treatment, if any, must also be disclosed to the potential study participant (§ 50.25(a)(4)). Any reasonably foreseeable risks to the participant shown from the results of completed animal reproductive toxicity studies must be discussed in informed consent. When preclinical teratology and reproductive toxicity studies are not completed prior to the initial studies in humans, male and female study subjects should be informed about the lack of full characterization of the test article as well as the potential and unknown effects of the test agent on conception and fetal development. All study subjects should be provided with new pertinent information arising from preclinical studies as it becomes available, and informed consent documents should be updated when appropriate. If there is no relevant information, the informed consent should explicitly state this fact and should indicate the risks that cannot be ruled out.

16. The agency stated in the preamble to the proposed rule (62 FR 49946 at 49950) that when the teratogenic effects of a drug are well established, the agency, sponsor, or IRB may require the use of contraception to prevent pregnancy in sexually active individuals with reproductive potential. One comment noted this statement and suggested that the regulation clearly state that all women in all clinical trials have the right to be fully informed and to balance the risks and benefits of participation.

In most circumstances, a study protocol does not need to require specific contraceptive approaches. In accordance with good medical practice, it is expected that volunteers in clinical trials will take appropriate precautions against becoming pregnant. The agency, sponsor, or IRB may require that a protocol provide for instructions to the volunteer about effective measures to avoid pregnancy. Other appropriate precautions include efforts to ensure that a woman volunteer is not pregnant at the time a trial begins, such as pregnancy testing to detect the beta subunit of the human chorionic gonadotropin molecule. Pregnancy testing may need to continue during the trial and after the drug administration portion of the trial has ended, based on the half-life of the drug under study and other considerations. Contraceptive counseling by a qualified health care provider should be offered and provided to trial participants with a focus on the use of highly effective contraception, allowing for abstinence if a woman has successfully used that as her chosen method of birth control. Although women retain control over their reproductive decisions, women and the investigator should consider together the benefits and risks of participation, including the risks resulting from an inability to maintain adequate contraception. In some cases, notably where a drug is clearly teratogenic, a protocol may need to require specific approaches to contraception.

17. One comment stated that sponsors must retain the right to exclude women of childbearing age from clinical trials involving compounds with the potential for teratogenic effects, unless Congress enacts meaningful protection against liability. The comment based its concern on the potential liability of sponsors for any adverse effect on the offspring of study participants. The comment noted that many States permit

a child adversely affected by a parent's medical decision, who has reached the age of majority, to sue for injuries alleged to have been caused by the drug. The comment also noted that, in some States, a parent's consent based on information in an FDA-approved warning does not preclude lawsuits by adult children.

FDA recognizes that, in some States, a child who has reached the age of majority or spouse may have the right to sue for injuries caused by a parent's medical decision to use a drug. To succeed in such a lawsuit, the child or spouse must show, among other things, that warnings about the use of the drug were inadequate or that consent was not fully informed.

FDA also recognizes that, in some States, parental consent based on FDA-approved warnings for marketed drugs might not preclude a child from filing a lawsuit. In States permitting such lawsuits, the courts have described FDA standards for such warnings as minimum requirements for disclosing risk information. Because manufacturers and sponsors have the ultimate responsibility to provide risk information to FDA as well as to consumers, in some States, FDA approval of warning statements for marketed drugs is evidence of the warning's adequacy but is not dispositive. These cases suggest that a warning might be inadequate when a sponsor or manufacturer obscures or withholds risk information from FDA, or delays submission of supplemental risk information obtained after the product was approved.

The sponsor or investigator, with IRB oversight, is responsible for providing risk information to subjects and obtaining informed consent from them. (See § 312.50 and 21 CFR 312.53(c)(1)(vi)(*d*); part 50 (21 CFR part 50) and part 56.) Few liability cases have been reported involving injuries from experimental drugs and even fewer involving such injuries to offspring. In those cases involving injuries to the offspring of mothers who ingested experimental drugs, the inadequacy of warnings, or the lack of informed consent, was an essential element of the lawsuit. (See *Craft* v. *Vanderbilt University*, 940 F. Supp. 1185 (M.D. Tenn. 1996); *Wetherill* v. *iversity of Chicago*, 570 F. Supp. 1124 (N.D. Ill. 1983); *Mink* v. *University of Chicago*, 460 F. Supp. 713 (N.D. Ill. 1978); and *Diaz* v. *Hillsborough County Hospital Authority*, 165 F.R.D. 689 (M.D. Fla. 1996).) Although these cases involved research subjects who were pregnant women, they show that liability can be precluded when patients are informed adequately about a study and its risks. The women who brought these lawsuits claimed that they were not told that research was being conducted, much less asked for informed consent. The present rule is firmly grounded on informed consent and a fully informed patient.

The agency has found no reported case in which a sponsor or manufacturer of a drug was held liable when warnings were found to be adequate or the consent to be informed. In all of the strict liability cases involving marketed drug products, the adequacy of the warnings remains an essential element for avoiding liability. In determining the adequacy of a warning for prescription drug products, the standard generally applied is the drug maker's actual or constructive knowledge of the risk at the time the product was sold or distributed.

Considering all the relevant cases, the comment's concern about liability for injuries to offspring of study participants appears overstated. If anything, these cases show that the risk of liability for injuries to offspring resulting from their mother's ingestion of an experimental drug is remote. Sponsors and manufacturers can generally avoid liability by providing adequate warnings and obtaining fully informed consent.

This final rule applies to one narrow category of beneficial drugs, that is, experimental drugs being studied for their safety and effectiveness in treating life-threatening diseases or conditions. The rule also reduces the exposure to liability lawsuits by applying only to studies that seek subjects who are suffering from the life-threatening disease or condition at issue. The risk of liability is further minimized when the sponsor uses informed consent with careful study design, pregnancy screening techniques, and counseling about contraception and abstinence.

18. One comment expressed concern that informed consent alone may not be adequate to reduce the risk of injury to a participant and, thus, the risk of liability to a sponsor. Specifically, the comment states that, in many situations, the full nature and extent of any potential reproductive toxicity may not be sufficiently characterized at the time of desired access to a given investigational therapy to allow IRB's, investigators, or potential study subjects to make a complete determination of any potential risk. To provide patients with complete risk and benefit information for certain developmental compounds or studies, consent forms would have to be worded in a way that could effectively discourage participation in these trials by the very population intended to benefit from the proposed regulation.

An inherent danger in the use of every experimental drug is that unknown safety risks may exist for human research subjects. The purpose of informed consent is to provide research volunteers with sufficient information to determine for themselves whether the risks are justified. Informed consent regulations require a sponsor, when appropriate, to describe the reasonably foreseeable risks, and currently unforeseeable risks, to the participant or to an embryo or fetus in the event the participant should become pregnant during the study (§ 50.26(b)(1)). That the disclosure of complete risk and benefit information might discourage participation is not a reason to withhold information or to preempt the opportunity to participate in a study. On the contrary, disclosure serves the interests of self-determination regarding a person's decision to participate in medical research and ensures informed decisionmaking as to whether the risks are indeed outweighed by the benefits.

19. One comment stated that exceptional circumstances may exist where the potential risk of the drug to the participant outweighs the potential benefit. As an example, the comment indicated that it may not be advisable to include treatment-naive human immunodeficiency virus (HIV)-infected women with reproductive potential in clinical trials for a drug that has a high (or undetermined) risk to a fetus if there are other effective and safe agents in the same class available for use in these women.

HIV-infected women who are treatment-naive should not be excluded from participating in clinical trials solely because of their reproductive potential. HIV-infected women should have a choice, as should HIV-infected men, of enrolling in clinical trials, as long as there is a proper informed consent process that acknowledges the availability of safe and effective treatment options and, if the potential participants are sexually active, abstinence or contraception is used. After sponsor, FDA, and local IRB decisions on the protocol, the ultimate risk-benefit analysis in such circumstances is best left to the patient and the physician.

D. Increased Costs

20. Two comments supported the agency's position that the societal benefits outweigh the increased costs associated with the participation of women with reproductive potential who have a life-threatening disease in

clinical trials. Both comments specifically highlighted the advantage of obtaining gender-specific data in this population.

Based on the analysis of economic impacts described in the proposed rule, the agency believes that the societal benefits outweigh the potential minimal additional costs because a considerable patient population (i.e., women with reproductive potential who have a life-threatening disease or condition) could receive a potentially beneficial new therapy (62 FR 49946 at 49953).

E. The Use of a Clinical Hold

21. The agency received divergent comments about the use of a clinical hold to achieve the objectives of the proposal. One comment stated a belief that it is appropriate for FDA to use its ability to place a clinical trial on hold if the sponsor excludes women for inappropriate reasons. However, another comment asserted that the use of a clinical hold in these circumstances is not consistent with the original intent of the clinical hold regulations and turns a clinical hold into a punitive measure.

A clinical hold is an order that FDA may issue to a sponsor to delay a proposed clinical investigation or to suspend an ongoing investigation for the development of a new drug or biological product (§ 312.42). The agency has determined that it is appropriate to impose a clinical hold on an investigation that categorically excludes women or men with reproductive potential who have a life-threatening disease or condition.

The imposition of a clinical hold under these amendments to § 312.42 is not punitive. The aim of these amendments is to ensure that women with reproductive potential who have a life-threatening disease or condition are not categorically excluded from participation in clinical trials. The rationale for this action, as discussed in the preamble to the proposed rule (62 FR 49946 at 49949 through 49951), is based on four factors: (1) FDA is committed to expanding access to and accelerating approval of new therapies for life-threatening diseases and conditions; (2) important ethical principles underlie the belief that neither gender should be excluded from early clinical trials involving a life-threatening disease or condition because of reproductive potential; (3) the mechanisms are in place, or are available, to protect individuals who participate in clinical trials from potential risks; and (4) FDA is committed to expanding the collection of gender-specific data on investigative therapies, especially for those populations who ultimately will be using the therapies. Furthermore, FDA intends to issue a clinical hold order as a last resort, only after the review division's attempt to discuss and satisfactorily resolve the matter with the sponsor (§ 312.42(c)). As explained in Center for Drug Evaluation and Research (CDER) internal policy statements, CDER experience is that most potential holds can be avoided through such discussion (CDER Manual of Policy and Procedure (MAPP) 6030.1).

In the preamble to the proposed rule (62 FR 49946 at 49951), FDA discussed its legal authority to issue this rule under section 505(i) of the Federal Food, Drug, and Cosmetic Act (the act) (21 U.S.C. 355(i)). Since publication of the proposed rule, on November 21, 1997, the President signed into law the Food and Drug Administration Modernization Act of 1997 (the Modernization Act) (Public Law 105–115). Section 117 of the Modernization Act amends section 505(i) of the act to include specific provisions authorizing the imposition of a clinical hold on an investigation if ''the drug involved represents an unreasonable risk to the safety of the persons who are the subjects of the clinical investigation * * * or * * * for such other reasons as the Secretary may by regulation establish'' (section 505(i)(3)(B) of the act). The Modernization Act makes explicit the agency's authority to issue regulations for the imposition of a clinical hold for reasons other than unreasonable risks to the safety of the subjects involved in the investigation.

22. One comment noted a distinction between a clinical hold imposed for a regulatory purpose (e.g., because a sponsor has not made adequate provision for the inclusion of women with reproductive potential in a clinical trial) and one imposed due to safety concerns. The comment suggested that the agency establish a new set of regulations for this ''regulatory clinical hold,'' rather than provide for it in the already-established clinical hold regulations.

FDA's regulations governing IND's are located in part 312 (21 CFR part 312), and the agency's clinical hold regulations are in § 312.42. FDA declines the suggestion to create a new set of regulations to accommodate these amendments because this change would serve no purpose and would be confusing, placing bases for clinical holds in two locations although the procedures for holds in both cases are identical. Furthermore, since President Clinton issued the ''Regulatory Reinvention Initiative'' memorandum on March 4, 1995, FDA has sought to consolidate its regulations and to eliminate duplicative ones. The creation of a new set of clinical hold regulations would be contrary to the objectives of regulatory reinvention.

23. One comment proposed safeguards to protect the interests of subjects already participating in a clinical trial and to ensure that a clinical hold is used only as a last resort. The comment proposed the following safeguards: (1) A limitation of the rule to those clinical trials that are intended to demonstrate effectiveness and (2) procedures to ensure a dialogue between the sponsor and the agency to help avoid the imposition of the clinical hold. The comment recommended that when a clinical hold is issued for inadequate participation of women in the trial, procedural safeguards should include: (1) The concurrence of the Center Director after personal consultation between the Division Director and the sponsor; (2) communication of the reason for the hold to the sponsor in writing within 10 days of the imposition of a clinical hold; and (3) review by the Clinical Hold Review Committee at the first meeting following the hold.

The comment states that under this rule, a clinical hold may be issued for inadequate participation of women in a clinical trial. This statement erroneously implies that the rule imposes requirements to enroll or recruit a specific number of women in trials. To the contrary, the rule prohibits the exclusion of women with reproductive potential but does not require a quota or specific number of women for any trial.

The agency declines the suggestion to limit the scope of the rule to those clinical trials that are intended to demonstrate effectiveness. As explained in the preamble to the proposed rule (62 FR 49946 at 49949), many early clinical studies involving life-threatening diseases offer the potential for therapeutic benefit, especially when participation in an early clinical study is a prerequisite for enrollment in later studies. FDA has concluded that all trials involving patients with life-threatening diseases and conditions should, for purposes of this rule, be considered to have therapeutic potential. This rule, therefore, applies to studies in any phase of a clinical investigation that enroll participants with a life-threatening disease or condition.

The agency's clinical hold regulations provide a process for discussion between a sponsor and FDA about deficiencies in an investigation to ensure that a clinical hold is imposed as

a measure of last resort. Whenever FDA concludes that a deficiency exists in a clinical investigation that may be grounds for the imposition of a clinical hold, FDA will, unless patients are exposed to immediate and serious risk, attempt to discuss and satisfactorily resolve the matter with the sponsor before issuing the clinical hold order (§ 312.42(c)).

Under FDA regulations, the Division Director that is responsible for reviewing the application for the underlying drug product has the authority to determine whether to impose a clinical hold (§ 312.42(d)). The agency does not find that concurrence by the Center Director is necessary to ensure that a clinical hold is imposed only as a last resort because, as discussed above, the agency's regulations and internal procedures already provide for discussion between the sponsor and the agency concerning the need for the clinical hold. Division directors in CDER and the Center for Biologics Evaluation and Research (CBER) have the authority to ensure that agency personnel follow these regulations and procedures.

FDA regulations state that the agency will communicate to the sponsor in writing the reasons for a clinical hold as soon as possible, and no more than 30 days after imposing the hold (§ 312.42(d)). A clinical hold is usually imposed only after discussion between FDA and a sponsor. Because the Division Director, or designee, generally provides a brief explanation of the reasons for the hold by telephone at the time the clinical hold is ordered, the agency finds it unnecessary to shorten the 30-day requirement for a written explanation.

CDER and CBER have established committees to review clinical holds and promote consistency throughout the Centers in issuing clinical holds. Under CDER policy, the CDER Clinical Holds Peer Review Committee meets quarterly to review all commercial IND clinical holds issued during the previous quarter (CDER MAPP 6030.1). The CBER Clinical Hold Oversight Committee reviews selected clinical holds that have been issued. The procedures for these committees will apply to clinical holds imposed by CDER or CBER under this rule.

24. Two comments indicated that this use of a clinical hold is not the optimal mechanism to achieve the agency's objectives and may threaten other agency goals (e.g., expediting the development of innovative therapies to treat life-threatening diseases and conditions in both men and women). One comment further noted that the best way to ensure that women and men of reproductive potential are able to participate in clinical trials is to address the issue during the development of the protocol for the trial early in the IND process. The comment recommended that a plan be developed in the IND process for including women of reproductive potential in clinical studies or articulating a clear rationale for their exclusion. The sponsor and the agency should agree on the plan as part of the IND with compliance tied to the plan and progress reported in routine annual reports to the IND.

Although developing data bases that include both men and women is an important goal, this rule does not address the content of an NDA or biologics license application (BLA) data set. Rather, this rule seeks to prevent exclusions of people suffering from life-threatening conditions or diseases from participation in trials based on reproductive potential.

Overall protocol development is addressed under several regulatory programs for the development and review of products that are intended to treat life-threatening diseases or conditions. The agency recognizes that agreement between a sponsor and FDA on a protocol for a clinical trial is an important step towards ensuring that women with reproductive potential who have a life-threatening disease or condition are not excluded from the clinical trial. Under the agency's regulations at §§ 312.80 through 312.88, sponsors are encouraged to work with the agency during the development of drugs intended to treat life-threatening and severely debilitating illnesses. Sponsors may ask to meet with FDA early in the drug development process to review and reach agreement on the design of necessary preclinical and clinical studies (§ 312.82). Such meetings may take place prior to the submission of the IND or at the end of phase 1. Furthermore, under section 112 of the Modernization Act, the agency has developed procedures to facilitate the development and expedite the review of products that are intended to treat serious or life-threatening conditions and demonstrate the potential to address an unmet medical need. Such procedures, described in the FDA guidance entitled ''Fast Track Drug Development Programs—Designation, Development, and Application Review'' (October 1998), encourage appropriately timed meetings and regular contact between sponsors and FDA.

Section 119(a) of the Modernization Act directs FDA to work towards, and achieve, agreement with sponsors and applicants on the design and size of clinical trials intended to form the primary basis of an effectiveness claim in an NDA or BLA. In conjunction with the reauthorization of the Prescription Drug User Fee Act in November 1997, FDA agreed to specific performance goals for the management of activities associated with the development and approval of products in human drug applications that are defined in section 735(1) of the act (21 U.S.C. 379g(1)). Under the goals, FDA will, upon request by a sponsor, evaluate certain protocols and issues relating to the protocols to assess whether their design is adequate to meet scientific and regulatory requirements identified by the sponsor. One type of protocol that is eligible for this special protocol assessment is a clinical protocol for a phase 3 trial whose data will form the primary basis for an efficacy claim. Section 119(a) of the Modernization Act and the performance goals recognize the importance of early agency review and agreement with sponsors regarding protocols for clinical trials.

Sponsors are required to submit information regarding the progress of IND's in their annual reports to the agency (§ 312.33). Any specific information regarding a clinical protocol agreement should be included in the annual report. Furthermore, sponsors of clinical studies for drug and biologic products are now required to tabulate in annual reports the numbers of subjects enrolled in the trial, specifying gender and other demographic subgroups (§ 312.33) (see 63 FR 6854).

F. International Issues

25. FDA received two comments concerning the effect of the regulation on international drug development. One comment questioned how the regulation will affect compliance with the International Conference on Harmonization of Technical Requirements for Registration of Pharmaceuticals for Human Use (ICH) ''Draft Guideline on the Timing of Nonclinical Studies for the Conduct of Human Clinical Trials for Pharmaceuticals.'' The comment stated that the impact of the rule on global drug development remains unclear and questioned whether data collected from trials conducted under the rule would be acceptable to the regulatory agencies in Europe or Japan. Another comment raised the possibility of regulatory difficulties in including women of reproductive potential in some early studies when those studies are subject to regulation by agencies in other countries. The comment urged FDA to consider the effects of the proposed rule on multicountry studies.

The final rule is consistent with ICH initiatives. In July 1997, FDA issued a final ICH guidance entitled ''M3 Nonclinical Safety Studies for the Conduct of Human Clinical Trials for Pharmaceuticals'' (ICH M3 guidance) (published in 62 FR 62922, November 25,1997). The ICH M3 guidance, which supersedes the draft guideline cited in the comment, notes that there are regional differences in the timing of reproductive toxicity studies to support the inclusion of women with reproductive potential in clinical trials for all pharmaceuticals. As described in the ICH M3 guidance, women with reproductive potential may be included in early, carefully monitored studies in the United States without reproduction toxicity studies provided appropriate precautions are taken to minimize risk. Such precautions include pregnancy testing, use of a highly effective method of birth control, and entry after a confirmed menstrual period. Continued testing and monitoring during the trial should be sufficient to ensure compliance with the measures for avoiding pregnancy during the period of drug exposure (which may exceed the length of the study). To support this approach, informed consent should include any known pertinent information related to reproductive toxicity, such as a general assessment of potential toxicity of pharmaceuticals with related structures or pharmacological effects. If no relevant information is available, the informed consent should clearly note the potential for risk (ICH M3 guidance, p. 7).

In multicountry studies, provided that there is not a categorical exclusion based on reproductive potential in the United States, FDA does not intend to impose a hold for such exclusions on studies in foreign sites. Foreign data with such exclusions may be submitted to the agency.

G. HIV/Acquired Immune Deficiency Syndrome (AIDS)

26. One comment discussed the Center for Disease Control's reports of a steady decline in AIDS incidence and mortality rates in the United States since 1993 and highlighted the disparities related to women. The comment noted that the number of AIDS deaths in 1996 declined among all racial/ethnic groups but increased 3 percent among women and among those who acquired the infection through heterosexual contact. The comment emphasized the treatment and prevention challenges affecting HIV-infected women, highlighted the need for gender-specific data, and advocated the enrollment of women in clinical trials in numbers equivalent to the prevalence of women with AIDS in America.

As discussed in the preamble to the proposed rule (62 FR 49946 at 49950 and 49951), FDA is committed to expanding the collection of gender-specific data on investigative therapies, especially for those populations who are likely to use an investigational agent once it is marketed. Because many of the women who are affected by HIV and AIDS are women with reproductive potential, this rule will prevent their exclusion from participation in clinical trials for such diseases solely because of a perceived risk or potential risk of reproductive or developmental toxicity.

The Division of Antiviral Drug Products in CDER and other components in CDER and CBER that review HIV/AIDS-related products encourage sponsors to include women of all age groups early in the drug development process and support the concept of allowing each eligible female participant to make her own informed decision regarding the risks and benefits of participating in a trial.

The comment suggested that women be enrolled in clinical trials for AIDS therapies in numbers equivalent to the prevalence of women with AIDS in America. The comment is outside the scope of this rule. The rule does not require that particular numbers of women be enrolled in trials for investigational therapies. The rule only prohibits the exclusion of women with reproductive potential from eligibility for a clinical trial.

27. One comment indicated that the proposal is a broad-based solution to a focused problem that the agency has identified within a single drug class—antiviral drugs.

Although FDA prepared this proposal largely in response to recommendations made by the National Task Force on AIDS Drug Development and the Presidential Advisory Council on HIV/AIDS, the recommendations are applicable to all life-threatening diseases and conditions, and the agency has concluded that this problem is a general one. Additionally, when conducting its cost analysis, the agency used a protocol data base that included information from four CDER review divisions. Of the 43 protocols involving life-threatening diseases or conditions that were identified as having precluded the opportunity for women with reproductive potential to participate in trials, 28 percent were from the Division of Antiviral Drug Products, 67 percent were from the Division of Cardio-Renal Drug Products, and the remaining 5 percent were from the Division of Medical Imaging, Surgical, and Dental Drug Products and the Pilot Drug Evaluation Staff. The project did not include representation of all divisions in CDER and CBER. However, it was assumed that the available data were representative of all CDER and CBER review divisions regarding the exclusion of women with reproductive potential.

IV. Analysis of Impacts

FDA has examined the impacts of the final rule under Executive Order 12866 and the Regulatory Flexibility Act (Public Law 96–354). Executive Order 12866 directs agencies to assess all costs and benefits or available regulatory alternatives and, when regulation is necessary, to select regulatory approaches that maximize net benefits (including potential economic, environmental, public health and safety, and other advantages). Under the Regulatory Flexibility Act (5 U.S.C. 601–612), unless an agency certifies that a rule will not have a significant economic impact on small entities, the agency must analyze regulatory options that would minimize the impact of the rule on small entities. Title II of the Unfunded Mandates Reform Act (Public Law 104–7) (in section 202) requires that agencies prepare an assessment of anticipated costs and benefits before proposing any rule that may result in an expenditure in any 1 year by State, local, and tribal governments, in the aggregate, or by the private sector, of $100 million or more (adjusted annually for inflation).

The agency has reviewed this rule and has determined that it is consistent with the regulatory philosophy and principles identified in Executive Order 12866, and in these two statutes. In addition, the final rule is not a significant regulatory action as defined by the Executive Order and so is not subject to review under the Executive Order. With respect to the Regulatory Flexibility Act, the agency certifies that the rule will not have a significant effect on a substantial number or small entities. Because the final rule does not impose any mandates on State, local, or tribal governments, or the private sector that will result in a 1-year expenditure of $100 million or more, FDA is not required to perform a cost-benefit analysis under the Unfunded Mandates Reform Act.

A. Costs

The Costs section of the Analysis of Impacts in the proposed rule (62 FR 49952) remains essentially unchanged and is not repeated here. However, two items require additional comment.

None of the cost estimates in the proposed rule were corrected for the incidence of pregnant women having diseases under study (but not having been included in the studies). Hence, the cost estimates discussed in the proposed rule were overstated. The agency believes that the effect of this overstatement is relatively insignificant.

The agency is aware of industry's concerns about liability exposure associated with the inclusion of women with reproductive potential in clinical trials and the potential for harm to offspring. Although there are cases of injury to offspring of mothers who ingested experimental drugs, the inadequacy of warnings or the lack of informed consent has been an essential element of such lawsuits. The agency is not aware of any reported case in which a sponsor of an investigational drug was held liable for injuries to offspring when the sponsor provided adequate warnings and obtained fully informed consent. Therefore, the agency assumes that this rule adds nothing to current liability costs under existing law.

B. Small Entities

The analysis in the proposed rule identified protocols sponsored by small businesses. The largest additional pregnancy testing cost incurred by a small business in the reviewed protocols under the rule was $990. Projected across all CDER and CBER review divisions and annualized, FDA expects no more than 9 protocol submissions per year from small businesses that might incur increased costs. Few small firms are likely to be affected in any given year, and most of these firms would incur no significant additional costs. Therefore, under the Regulatory Flexibility Act, the Commissioner of Food and Drugs certifies that this rule will not have a significant effect on a substantial number of small entities.

V. Environmental Impact

The agency has determined under 21 CFR 25.30(h) that this action is of a type that does not individually or cumulatively have a significant effect on the human environment. Therefore, neither an environmental assessment nor an environmental impact statement is required.

VI. Paperwork Reduction Act of 1995

This final rule contains no collections of information. Therefore, clearance by the Office of Management and Budget under the Paperwork Reduction Act of 1995 is not required.

VII. Federalism

FDA has analyzed this final rule in accordance with the principles set forth in Executive Order 13132. FDA has determined that the rule does not contain policies that have substantial direct effects on the States, on the relationship between National Government and the States, or on the distribution of power and responsibilities among the various levels of government. Accordingly, the agency has concluded that the rule does not contain policies that have federalism implications as defined in the order and, consequently, a federalism summary impact statement is not required.

List of Subjects in 21 CFR Part 312

Drugs, Exports, Imports, Investigations, Labeling, Medical research, Reporting and recordkeeping requirements, Safety.

Therefore, under the Federal Food, Drug, and Cosmetic Act, the Public Health Service Act, and under authority delegated to the Commissioner of Food and Drugs, 21 CFR part 312 is amended as follows:

PART 312—INVESTIGATIONAL NEW DRUG APPLICATION

1. The authority citation for 21 CFR part 312 continues to read as follows:

Authority: 21 U.S.C. 321, 331, 351, 352, 353, 355, 371; 42 U.S.C. 262.

2. Section 312.42 is amended by adding new paragraph (b)(1)(v) and by revising paragraph (b)(2)(i) to read as follows:

§ 312.42 Clinical holds and requests for modification.

* * * * *

(b) * * *

(1) * * *

(v) The IND is for the study of an investigational drug intended to treat a life-threatening disease or condition that affects both genders, and men or women with reproductive potential who have the disease or condition being studied are excluded from eligibility because of a risk or potential risk from use of the investigational drug of reproductive toxicity (i.e., affecting reproductive organs) or developmental toxicity (i.e., affecting potential offspring). The phrase ''women with reproductive potential'' does not include pregnant women. For purposes of this paragraph, ''life-threatening illnesses or diseases'' are defined as ''diseases or conditions where the likelihood of death is high unless the course of the disease is interrupted.'' The clinical hold would not apply under this paragraph to clinical studies conducted:

(A) Under special circumstances, such as studies pertinent only to one gender (e.g., studies evaluating the excretion of a drug in semen or the effects on menstrual function);

(B) Only in men or women, as long as a study that does not exclude members of the other gender with reproductive potential is being conducted concurrently, has been conducted, or will take place within a reasonable time agreed upon by the agency; or

(C) Only in subjects who do not suffer from the disease or condition for which the drug is being studied.

(2) * * *

(i) Any of the conditions in paragraphs (b)(1)(i) through (b)(1)(v) of this section apply; or

* * * * *

Dated: May 24, 2000.

Jane E. Henney,

Commissioner of Food and Drugs.

Donna E. Shalala,

Secretary of Health and Human Services.

[FR Doc. 00–13664 Filed 5–31–00; 8:45 am]

BILLING CODE 4160–01–F

DEPARTMENT OF TRANSPORTATION

Coast Guard

33 CFR Part 165

[CGD01–00–133]

RIN 2115–AA97

Safety Zone: Fireworks Display, East River, Wards Island

AGENCY: Coast Guard, DOT.

ACTION: Temporary final rule.

SUMMARY: The Coast Guard is establishing a temporary safety zone for a fireworks display located on the East River, New York. This action is necessary to provide for the safety of life on navigable waters during the event. This action is intended to restrict vessel traffic in a portion of the East River.

DATES: This rule is effective from 8:30 p.m. (e.s.t.) on June 29, 2000 until 10 p.m. (e.s.t.) on June 30, 2000.

ADDRESSES: Comments and material received from the public, as well as documents indicated in this preamble as being available in the docket, are part of docket (CGD01–00–133) and are available for inspection or copying at Coast Guard Activities New York, 212 Coast Guard Drive, room 205, Staten Island, New York 10305, between 8 a.m. and 3 p.m., Monday through Friday, except Federal holidays. The telephone number is (718) 354–4012.

FOR FURTHER INFORMATION CONTACT: Lieutenant M. Day, Waterways Oversight Branch, Coast Guard Activities New York (718) 354–4012.

SUPPLEMENTARY INFORMATION:

Regulatory Information

We did not publish a notice of proposed rulemaking (NPRM) for this regulation. Under 5 U.S.C. 553(b)(8), the Coast Guard finds that good cause exists for not publishing an NPRM. Good cause exists for not publishing an NPRM due to the following reasons: due to the date the Application for Approval of Marine Event was received, there was insufficient time to draft and publish an NPRM and still publish the final rule with more than 30 days before its effective date. Any delay encountered in this regulation's effective date would be contrary to public interest since immediate action is needed to close the waterway and protect the maritime public from the hazards associated with this fireworks display. This is a local event with minimal impact on the waterway, vessels may still transit through the East River during the event, the zone is only in affect for 1½ hours and vessels can be given permission to transit the zone except for about 45 minutes during this time. Additionally, vessels would not be precluded from mooring at or getting underway from commercial or recreational piers in the vicinity of the zone.

Background and Purpose

The Coast Guard has received an application to hold a fireworks program on the waters of the East River, New York. This regulation establishes a safety zone in all waters of the East River within a 150-yard radius of the fireworks land shoot in approximate position 40°46′55.5″ N 073°55′33″ W (NAD 1983), about 200 yards northeast of the Triborough Bridge. The safety zone is in effect from 8:30 p.m. (e.s.t.) until 10 p.m. (e.s.t.) on Thursday, June 29, 2000. If the event is cancelled due to inclement weather, then this section is effective from 8:30 p.m. (e.s.t.) until 10 p.m. (e.s.t.) on Friday, June 30, 2000. The safety zone prevents vessels from transiting a portion of the East River and is needed to protect boaters from the hazards associated with fireworks launched from shore in the area. Recreational and commercial vessel traffic will be able to transit through the eastern 430 feet of the 1060-foot wide East River during the event. This safety zone precludes the waterway users from entering only the safety zone itself. Public notifications will be made prior to the event via the Local Notice to Mariners.

This event is currently regulated under 33 CFR 100.114 as an annually occurring event on July 1st. Due to the extensive increase of marine traffic in the Port of New York/New Jersey due to OPSAIL 2000 and the International Naval Review 2000 the sponsor is changing their event date for this year.

Regulatory Evaluation

This final rule is not a significant regulatory action under section 3(f) of Executive Order 12866 and does not require an assessment of potential costs and benefits under section 6(a)(3) of that Order. It has not been reviewed by the Office of Management and Budget under that Order. It is not significant under the regulatory policies and procedures of the Department of Transportation (DOT) (44 FR 11040; February 26, 1979). The Coast Guard expects the economic impact of this final rule to be so minimal that a full Regulatory Evaluation under paragraph 10e of the regulatory policies and procedures of DOT is unnecessary. This finding is based on the minimal time that vessels will be restricted from the zone, that vessels may still transit through the East River during the event, and advance notifications which will be made.

The size of this safety zone was determined using National Fire Protection Association and New York City Fire Department standards for 4″ mortars fired from shore combined with the Coast Guard's knowledge of tide and current conditions in the area.

Small Entities

Under the Regulatory Flexibility Act (5 U.S.C. 601 *et seq.*), the Coast Guard considered whether this final rule will have a significant economic impact on a substantial number of small entities. ''Small entities'' include small businesses, not-for-profit organizations that are independently owned and operated and are not dominant in their fields, and governmental jurisdictions with populations of less than 50,000.

For reasons discussed in the Regulatory Evaluation above, the Coast Guard certifies under section 605(b) of the Regulatory Flexibility Act (5 U.S.C. 601 *et seq.*) that this final rule will not have a significant economic impact on a substantial number of small entities.

Collection of Information

This final rule does not provide for a collection of information under the Paperwork Reduction Act of 1995 (44 U.S.C. 3501 *et seq.*).

Federalism

The Coast Guard has analyzed this final rule under the principles and criteria contained in Executive Order 13132 and has determined that this final rule does not have implications for federalism under that Order.

Unfunded Mandates

Title II of the Unfunded Mandates Reform Act of 1995 (UMRA) [Pub. L. 104–4, 109 Stat. 48] requires Federal agencies to assess the effects of certain regulatory actions on State, local, and tribal governments, and the private sector. UMRA requires a written statement of economic and regulatory alternatives for rules that contain *Federal mandates.* A Federal mandate is a new or additional enforceable duty imposed on any State, local, or tribal government, or the private sector. If any Federal mandate causes those entities to spend, in the aggregate, $100 million or more in any one year, the UMRA analysis is required. This final rule does not impose Federal mandates on any State, local, or tribal governments, or the private sector.

Environment

The Coast Guard considered the environmental impact of this final rule and concluded that under figure 2–1, paragraph 34(g), of Commandant Instruction M16475.1C, this final rule is categorically excluded from further environmental documentation. This rule fits paragraph 34(g) as it establishes a safety zone. A ''Categorical Exclusion Determination'' is available in the docket for inspection or copying where indicated under **ADDRESSES.**

List of Subjects in 33 CFR Part 165

Harbors, Marine Safety, Navigation (water), Reporting and recordkeeping requirements, Security measures, Waterways.

Regulation

For the reasons discussed in the preamble, the Coast Guard amends 33 CFR part 165 as follows:

PART 165—[AMENDED]

1. The authority citation for Part 165 continues to read as follows:

Authority: 33 U.S.C. 1231; 50 U.S.C. 191; 33 CFR 1.05–1(g), 6.04–1, 6.04–6, 160.5; 49 CFR 1.46.

2. Add temporary § 165.T01–133 to read as follows:

§ 165.T01–133 Safety Zone: Fireworks Display, East River, Wards Island.

(a) *Location.* The following area is a safety zone: All waters of the East River within a 150-yard radius of the fireworks land shoot in approximate position 40°46′55.5″ N 073°55′33″ W

(NAD 1983), about 200 yards northeast of the Triborough Bridge.

(b) *Effective period.* This section is effective from 8:30 p.m. (e.s.t.) until 10 p.m. (e.s.t.) on June 29, 2000. If the event is cancelled due to inclement weather, then this section is effective from 8:30 p.m. (e.s.t.) until 10 p.m. (e.s.t.) on June 30, 2000.

(c) *Regulations.*

(1) The general regulations contained in 33 CFR 165.23 apply.

(2) All persons and vessels shall comply with the instructions of the Coast Guard Captain of the Port or the designated on-scene-patrol personnel. These personnel comprise commissioned, warrant, and petty officers of the Coast Guard.

Upon being hailed by a U.S. Coast Guard vessel by siren, radio, flashing light, or other means, the operator of a vessel shall proceed as directed.

Dated: May 22, 2000.

R.E. Bennis,

Captain, U.S. Coast Guard, Captain of the Port, New York.

[FR Doc. 00–13811 Filed 5–30–00; 12:39 pm]

BILLING CODE 4910–15–P

NATIONAL ARCHIVES AND RECORDS ADMINISTRATION

36 CFR Part 1260

RIN 3095–AA67

Records Declassification

AGENCY: National Archives and Records Administration (NARA).

ACTION: Final rule.

SUMMARY: This rule updates NARA regulations related to declassification of national security-classified information in records transferred to NARA's legal custody. It incorporates changes resulting from Executive Order 12958, Classified National Security Information, including:

Revising the timeline for systematic review from 30 years to 25 years;

Redefining declassification responsibilities to reflect the E.O. 12958 requirement for agencies to maintain systematic review programs;

Adding requirements for agencies that elect to review their accessioned records at NARA;

Adding requirements for loaning records to agencies for declassification review; and Revising requirements for reclassification of information to meet the provisions of E.O. 12958;

The rule affects members of the public who file mandatory review requests and Federal agencies.

DATES: This rule is effective July 1, 2000.

FOR FURTHER INFORMATION CONTACT: Nancy Allard or Shawn Morton at 301–713–7360.

SUPPLEMENTARY INFORMATION: NARA published a notice of proposed rulemaking on February 17, 2000, at 65 FR 8077. The comment period ended on April 17, 2000. NARA received comments from 9 Federal agencies and 1 professional organization. Of the comments from the Federal agencies, 3 concurred with the proposed rule, 5 recommended clarifications or changes and 1 offered ''no comment.''

Following is a summary of the comments and a discussion of the changes that we made to the proposed rule to address those comments.

Automatic Declassification

One commenter stated that we should add a provision to account for the automatic declassification provisions in section 3.4 of Executive Order 12958. Executive Order 13142, issued on November 19, 1999, amended Executive Order 12958 section 3.4 to delay the application of automatic declassification for records accessioned into NARA until April 17, 2003. We have made appropriate reference to the automatic declassification requirements in the regulation.

As we reviewed §§ 1260.20 and 1260.40 to incorporate the reference, we further clarified these sections by removing the distinctions between records that are older and younger than 25 years to focus on the responsibilities for declassifying the information.

Restricted Data and Formerly Restricted Data

One Federal agency commented that the regulation does not address declassification responsibilities for nuclear-related information classified as Restricted Data and Formerly Restricted Data. This type of information is classified under the Atomic Energy Act of 1954, as amended, and is exempt from all requirements under Executive Order 12958. We added the language suggested by the commenter as § 1260.28, which specifies that only designated individuals in the Department of Energy may declassify records containing Restricted Data, and that only designated officials within the Department of Defense or the Department of Energy may declassify Formerly Restricted Data.

Mandatory Review Requests for White House Originated Information

The National Security Council recommended deleting § 1260.62 which explains how agencies should handle mandatory review requests for White House originated materials from a past administration that are in their custody. This section would have required agencies to forward the request, copies of the requested records, and a recommendation to grant or deny the request to the Archivist. The Archivist would then decide whether or not to declassify the information. The commenter noted that Federal agencies do not segregate White House originated information in their custody from their Federal records, and, therefore, follow the process for responding to Mandatory Review and FOIA requests for Federal records. We have accepted the comment after consulting with the Information Security Oversight Office.

Referring Documents Back to Agencies for Declassification Determinations

One Federal agency commented that § 1260.50 should be modified in several ways. The commenter pointed out that at times, the association of an agency with a particular document can be in itself a classified fact requiring protection. NARA currently does not tell requesters which agencies it has referred documents to. We have modified § 1260.50(d) according to the commenter's suggestion to clarify this existing practice.

The agency also offered alternative language in this section to clarify when NARA would send a document back to an agency for declassification. The commenter suggested that we insert the phrase, ''Where the originating agency has not provided systematic declassification guidance, or where there is a question regarding the declassification guidance provided'' at the beginning of the second sentence in § 1260.50(b). We have accepted this comment with modification. We cannot specify that we will refer the information only if we are missing guidance from the originating agency. When NARA declassifies information using agency systematic guidance, we must use the guidance of every agency that has equities in the information. If we do not have guidance from an agency that has equities in the information, even when it is not the originating agency, we review the information using the guidance that we do have, and then refer the information to the agency(ies) for which we do not have guidance for final action.

Appeals

We received a comment that NARA should act as the recipient for all appeals for adverse declassification decisions from other agencies. The

commenter indicated that this would be more efficient and consistent, and it would also allow, in the case of multiple referrals, NARA to act as a central point of contact for the appeal. If an agency's association with a particular document is classified, the commenter argued that this would provide a mechanism for protecting that fact.

NARA does not have the resources to handle all appeals for the entire Executive branch. In addition, the public would perceive this as an attempt to delay the appeals process by inserting another layer of bureaucracy into it. In order to address the commenter's concern of masking the association of particular agencies with particular information, NARA will send to the requester whatever appeal contact information the agency desires. Agencies may request other agencies to act as a contact point for appeals.

Responsibility for Declassification of Intelligence and Cryptological Information

A Federal agency commented that § 1260.26 improperly states that the Central Intelligence Agency (CIA) is ''responsible'' for declassifying information on intelligence sources and methods, and that the Secretary of Defense is ''responsible'' for declassifying information on cryptography. Sections 3.5(c) and 3.6(d) of Executive Order 12958 state that ''the Director of Central Intelligence may establish special procedures for the declassification of information pertaining to intelligence.'' It does not state that the CIA is the sole responsible entity for this action. The Executive Order also states that ''the Secretary of Defense may establish special procedures for declassification of cryptologic information.'' We have modified the regulation to more closely match the Executive Order.

This rule is not a significant regulatory action for the purposes of Executive Order 12866. As required by the Regulatory Flexibility Act, it is hereby certified that this rule will not have a significant impact on a substantial number of small entities because it applies to Federal agencies. This rule does not have any federalism implications.

List of Subjects in 36 CFR Part 1260

Archives and records.

For the reasons stated in the preamble, the National Archives and Records Administration revises 36 CFR Part 1260 to read as follows:

SUBCHAPTER D—DECLASSIFICATION

PART 1260—DECLASSIFICATION OF NATIONAL SECURITY INFORMATION

Subpart A—General Information

Sec.
1260.1 What is the purpose of this regulation?
1260.2 Definitions.
1260.4 What NARA holdings are covered by this regulation?
1260.6 What is the authority for this regulation?

Subpart B—Responsibilities

1260.20 Who is responsible for the declassification of national security-classified Executive Branch information that has been accessioned by NARA?
1260.22 Who is responsible for the declassification of national security-classified White House originated information in NARA's holdings?
1260.24 Who is responsible for declassification of foreign government information in NARA's holdings?
1260.26 Who is responsible for issuing special procedures for declassification of information concerning intelligence or cryptography in NARA's holdings?
1260.28 Who is responsible for declassifying records that contain nuclear-related information classified under the Atomic Energy Act of 1954, as amended, commonly referred to as Restricted Data and Formerly Restricted Data?

Subpart C—Systematic Review

1260.40 How will records at NARA be reviewed for declassification?
1260.42 What are the procedures for agency personnel to review records at a NARA facility?
1260.44 Will NARA loan accessioned records back to the agencies to conduct declassification review?

Subpart D—Mandatory Review

Executive Branch Records

1260.50 What procedures does NARA follow when it receives a request for Executive Branch records under mandatory review?
1260.52 What are agency responsibilities when it receives a mandatory review request forwarded by NARA?
1260.54 What is the appeal process when a mandatory review request for Executive Branch information is denied?

White House Originated Information

1260.56 Is White House originated information subject to mandatory review?
1260.58 What are the procedures for requesting a mandatory review of White House originated information?
1260.60 What are agency responsibilities with regard to mandatory review requests for White House originated information?
1260.62 What is the appeal process when a mandatory review request for White House originated information is denied?

Subpart E—Reclassification

1260.70 Can Executive Branch information be reclassified?
1260.72 Can White House information be reclassified?
1260.74 Can NARA appeal a request to reclassify information?

Authority: 44 USC 2101 to 2118; 5 USC 552; EO 12958, 60 FR19825, 3 CFR, 1995 Comp., p.333; EO 13142, 64 FR 66089, 3 CFR, 1999 Comp., p. 236.

Subpart A—General Information

§ 1260.1 What is the purpose of this regulation?

This regulation defines the responsibilities of NARA and other Federal agencies for declassification of national security classified information in the holdings of NARA. This part also provides procedures for conducting systematic reviews of NARA holdings and for processing mandatory review requests for NARA holdings. Regulations for researchers wishing to request Federal records under the Freedom of Information Act (FOIA) or under mandatory review can be found in 36 CFR 1254.38.

§ 1260.2 Definitions.

(a) *Systematic declassification review* means the review for declassification of national security-classified information contained in records that have been determined by the Archivist of the United States to have permanent value in accordance with 44 U.S.C. 2107.

(b) *Mandatory declassification review* means the review for declassification of national security-classified information in response to a request for declassification that meets the requirements under section 3.6 of Executive Order 12958.

§ 1260.4 What NARA holdings are covered by this regulation?

The NARA holdings covered by this regulation are records legally transferred to the National Archives and Records Administration (NARA), including Federal records accessioned into the National Archives of the United States; Presidential records; Nixon Presidential materials; and donated historical materials in Presidential Libraries and in the National Archives of the United States.

§ 1260.6 What is the authority for this regulation?

Declassification of and public access to national security information is governed by Executive Order 12958 of April 17, 1995 (3 CFR 1995 Comp., p. 333), Executive Order 13142 of November 19, 1999 (3 CFR 1999 Comp., p. 236), and by the Information Security

Oversight Office Implementing Directive for Executive Order 12958 (32 CFR Part 2001).

Subpart B—Responsibilities

§ 1260.20 Who is responsible for the declassification of national security-classified Executive Branch information that has been accessioned by NARA?

(a) Consistent with the requirements of section 3.4 of Executive Order 12958 and Executive Order 13142 on automatic declassification, the originating agency is responsible for its declassification, but may delegate declassification authority to NARA in the form of declassification guidance.

(b) If an agency does not delegate declassification authority to NARA, the agency is responsible for reviewing the records prior to the date that the records become eligible for automatic declassification.

(c) NARA is responsible for the declassification of records of a defunct agency that has no successor in function. NARA will consult with agencies having primary subject matter interest before making declassification determinations.

§ 1260.22 Who is responsible for the declassification of national security-classified White House originated information in NARA's holdings?

(a) NARA is responsible for declassification of information from a previous administration that was originated by:

(1) The President;

(2) The White House staff;

(3) Committees, commissions, or boards appointed by the President; or

(4) Others specifically providing advice and counsel to the President or acting on behalf of the President.

(b) NARA will consult with agencies having primary subject matter interest before making declassification determinations.

§ 1260.24 Who is responsible for declassification of foreign government information in NARA's holdings?

(a) The agency that received or classified the information is responsible for its declassification.

(b) In the case of a defunct agency, NARA is responsible for declassification of foreign government information in its holdings and will consult with the agencies having primary subject matter interest before making declassification determinations.

§ 1260.26 Who is responsible for issuing special procedures for declassification of information concerning intelligence or cryptography in NARA's holdings?

(a) The Director of Central Intelligence is responsible for issuing special procedures for declassification of information concerning intelligence activities and intelligence sources and methods.

(b) The Secretary of Defense is responsible for issuing special procedures for declassification of information concerning cryptography.

§ 1260.28 Who is responsible for declassifying records that contain nuclear-related information classified under the Atomic Energy Act of 1954, as amended, commonly referred to as Restricted Data and Formerly Restricted Data?

Only designated officials within the Department of Energy may declassify records containing Restricted Data. Records containing Formerly Restricted Data may only be declassified by designated individuals within the Department of Energy or by appropriate individuals in the Department of Defense.

Subpart C—Systematic Review

§ 1260.40 How will records at NARA be reviewed for declassification?

(a) Consistent with the requirements of section 3.4 of Executive Order 12958 and Executive Order 13142 on automatic declassification, NARA staff will systematically review for declassification records for which the originating agencies have provided declassification guidance. The originating agency must review records for which it has not provided declassification guidance.

(b) Agencies may choose to review their own records that have been accessioned by NARA by sending personnel to the NARA facility where the records are located to conduct the declassification review.

§ 1260.42 What are the procedures for agency personnel to review records at a NARA facility?

(a) NARA will make the records available to properly cleared agency reviewers. NARA will provide space for agency reviewers in the facility in which the records are located as space is available. NARA will also provide training and guidance for agency reviewers on the proper handling of archival materials.

(b) Agency reviewers must:

(1) Follow NARA security regulations and abide by NARA procedures for handling archival materials;

(2) Follow NARA procedures for identifying and marking documents that cannot be declassified; and

(3) Obtain permission from NARA before bringing into a NARA facility computers, scanners, tape recorders, microfilm readers and other equipment necessary to view or copy records. NARA will not allow the use of any equipment that poses an unacceptable risk of damage to archival materials. See 36 CFR 1254.26 and 1254.27 for more information on acceptable equipment.

§ 1260.44 Will NARA loan accessioned records back to the agencies to conduct declassification review?

In rare cases, when agency reviewers cannot be accommodated at a NARA facility, NARA will consider a request to loan records back to an originating agency in the Washington, DC, metropolitan area for declassification review. Each request will be judged on a case-by-case basis. The requesting agency must:

(a) Ensure that the facility in which the documents will be stored and reviewed passes a NARA inspection to ensure that the facility maintains:

(1) The correct archival environment for the storage of permanent records; and

(2) The correct security conditions for the storage and handling of national security-classified materials.

(b) Meet NARA requirements for ensuring the safety of the records;

(c) Abide by NARA procedures for handling of archival materials;

(d) Identify and mark documents that cannot be declassified in accordance with NARA procedures; and

(e) Obtain NARA approval of any equipment such as scanners, copiers, or cameras to ensure that they do not pose an unacceptable risk of damage to archival materials.

Subpart D—Mandatory Review

Executive Branch Records

§ 1260.50 What procedures does NARA follow when it receives a request for Executive Branch records under mandatory review?

(a) If the requested records are less than 25 years old, NARA refers copies of the records to the originating agency and to agencies that have equities in the information for declassification review. Agencies may also send personnel to a NARA facility where the records are located to conduct a declassification review, or may delegate declassification authority to NARA in the form of declassification guidance.

(b) If the requested records are more than 25 years old, NARA will review the

records using systematic declassification guidance provided by the originating agency and agencies having equities in the information. If the originating agency, or agencies having equities in the information have not provided systematic declassification guidance, or if there is a question regarding the guidance, NARA will refer any requested documents it is unable to declassify to the appropriate agency or agencies for declassification determinations.

(c) When the records were originated by a defunct agency that has no successor agency, NARA is responsible for making the declassification determinations, but will consult with agencies having primary subject matter interest.

(d) In every case, NARA will acknowledge receipt of the request and inform the requester of the action taken. If additional time is necessary to make a declassification determination on material for which NARA has delegated authority, NARA will tell the requester how long it will take to process the request. NARA will also tell the requester if part or all of the requested information is referred to other agencies for declassification review, subject to section 3.7(a) of Executive Order 12958.

§ 1260.52 What are agency responsibilities when it receives a mandatory review request forwarded by NARA?

(a) The agency must make a determination within 180 calendar days after receiving the request or inform NARA of the additional time needed to process the request. If an initial decision has not been made on the request within 1 year after the original date of the request, the requester may appeal to the Interagency Security Classification Appeals Panel (ISCAP).

(b) The agency must notify NARA of any other agency to which it forwards the request in those cases requiring the declassification determination of another agency.

(c) The agency must return to NARA a complete copy of each declassified document with the agency determination. If documents cannot be declassified in their entirety, the agency must return to NARA a copy of the documents with those portions that must be withheld clearly marked.

(d) The agency must also furnish, for transmission to the requester, a brief statement of the reasons the requested information cannot be declassified and a statement of the requester's right to appeal the decision, along with the procedures for filing an appeal. The agency must also supply for transmission to the requester a contact name and title and the address where the appeal must be sent.

§ 1260.54 What is the appeal process when a mandatory review request for Executive Branch information is denied?

(a) If an agency denies a declassification request under mandatory review, the requester may appeal directly to the appeal authority at that agency.

(b) If requested by the agency, NARA will supply the agency with:

(1) Copies of NARA's letter to the requester transmitting the agency denial; and

(2) Copies of any documents denied in part that were furnished to the requester.

(c) The agency appeal authority must notify NARA in writing of the final determination and of the reasons for any denial.

(d) The agency must furnish to NARA a complete copy of any document they released to the requester only in part, clearly marked to indicate the portions that remain classified. NARA will give the requester a copy of any notifications from the agencies that describe what information has been denied and what the requesters appeal rights are.

(e) In the case of an appeal for information originated by a defunct agency, NARA will notify the requester of the results and furnish copies of documents declassified in full and in part. If the request cannot be declassified in its entirety, NARA will send the requester a brief statement of why the requested information cannot be declassified and a notice of the right to appeal the determination within 60 calendar days to the Deputy Archivist of the United States, National Archives and Records Administration, 8601 Adelphi Road, College Park, MD 20740–6001.

White House Originated Information

§ 1260.56 Is White House originated information subject to mandatory review?

White House originated information of former Presidents is subject to mandatory review consistent with the Presidential Records Act, 44 U.S.C. 2203, the Presidential Recordings and Materials Preservation Act, 44 U.S.C. 2111 note, and any deeds of gift that pertain to the materials or the respective Presidential administrations pursuant to 44 U.S.C. 2107 and 2111. Unless precluded by such laws or agreements, White House originated information is subject to mandatory or an equivalent agency review for current classification when the materials have been archivally processed or can be identified with specificity. However, records covered by the Presidential Records Act are closed for 5 years after the end of the Presidential administration, or until an integral file segment has been archivally processed, whichever occurs first, pursuant to 44 U.S.C. 2204.

§ 1260.58 What are the procedures for requesting a mandatory review of White House originated information?

(a) NARA will promptly acknowledge to the requester the receipt of a request for White House originated information.

(b) If the requested information is less than 25 years old, NARA will consult with agencies having primary subject matter interest. NARA will forward copies of the requested materials to the agencies and request their recommendations regarding declassification.

(c) If the requested records are more than 25 years old, NARA will review the records using systematic declassification guidance provided by the originating agency and agencies having equities in the information. If the originating agency, or agencies having equities in the information have not provided systematic declassification guidance, or if there is a question regarding the guidance, NARA will refer any requested documents it is unable to declassify to the appropriate agency or agencies for their recommendations regarding declassification.

(d) NARA will notify the requester of the results and furnish copies of the documents declassified in full and in part. If the requested records are not declassified in their entirety, NARA will send the requester a brief statement of the reasons the information cannot be declassified and a notice of the right to appeal the determination within 60 calendar days to the Deputy Archivist of the United States, National Archives and Records Administration, 8601 Adelphi Road, College Park, MD 20740–6001.

§ 1260.60 What are agency responsibilities with regard to mandatory review requests for White House originated information?

When an agency receives a mandatory review request from NARA for consultation on declassification of White House originated material, whether it is an initial request of an appeal, the agency must:

(a) Advise the Archivist whether the information should be declassified in whole or in part or should continue to be exempt from declassification;

(b) Provide NARA a brief statement of the reasons for any denial of declassification; and

(c) Return all reproductions referred for consultation, including a complete

copy of each document that should be released only in part, clearly marked to indicate the portions that remain classified.

§ 1260.62 What is the appeal process when a mandatory review request for White House originated information is denied?

(a) When the Deputy Archivist of the United States receives an appeal, he/she will review the decision to deny the information and consult with the appellate authorities in the agencies having primary subject matter interest in the information.

(b) NARA will notify the requester of the determination and make available any additional information that has been declassified as a result of the requester's appeal.

(c) NARA will also notify the requester of the right to appeal denials of access to the Executive Secretary of the Interagency Security Classification Appeals Panel, Attn: Mandatory Review Appeals, c/o Information Security Oversight Office, National Archives and Records Administration, 700 Pennsylvania Avenue, NW, Room 18N, Washington, DC 20408.

Subpart E—Reclassification

§ 1260.70 Can Executive Branch information be reclassified?

(a) An agency may ask NARA to temporarily close, re-review, and possibly reclassify records and donated historical materials originated by the agency. Records that were declassified in accordance with E.O. 12958 (or predecessor orders) may be reclassified only if the information is less than 25 years old and has not been previously disclosed to the public. Agencies must submit in writing requests to reclassify Executive Branch records to the Assistant Archivist for Records Services—Washington, DC, National Archives and Records Administration, 8601 Adelphi Road, College Park, MD 20740–6001. Requests to reclassify information in Presidential libraries must be submitted in writing to the Assistant Archivist for Presidential Libraries, National Archives and Records Administration, 8601 Adelphi Road, College Park, MD 20740–6001. In the request, the agency must:

(1) Identify the records or donated materials involved as specifically as possible;

(2) Explain the reason the re-review and possible reclassification may be necessary; and

(3) Provide any information the agency may have concerning any previous public disclosure of the information.

(b) If the urgency of the request precludes a written request, an authorized agency official may make a preliminary request by telephone and follow up with a written request within 5 workdays.

§ 1260.72 Can White House originated information be reclassified?

An agency may ask NARA to temporarily close, re-review, and possibly reclassify White House originated information that has been declassified in accordance with E.O. 12958 (or predecessor orders) only if it has not been previously disclosed to the public. The agency must follow the same procedures as a request for reclassification of agency originated information in 36 CFR 1260.70, but it must submit the request to the Assistant Archivist for Presidential Libraries, National Archives and Records Administration, 8601 Adelphi Road, College Park, MD 20740–6001.

§ 1260.74 Can NARA appeal a request to reclassify information?

NARA may appeal to the Director of the Information Security Oversight Office any re-review or reclassification request from an agency when, in the Archivist's opinion, the facts of previous disclosure suggest that such action is unwarranted or unjustified. NARA will notify the requesting agency that it is appealing the request at the same time that it initiates the appeal.

Dated: May 26, 2000.

John W. Carlin,

Archivist of the United States.

[FR Doc. 00–13809 Filed 5–31–00; 8:45 am]

BILLING CODE 7515–01–P

NATIONAL ARCHIVES AND RECORDS ADMINISTRATION

36 CFR Part 1280

RIN 3095–AA06

Public Use of NARA Facilities

AGENCY: National Archives and Records Administration.

ACTION: Final rule.

SUMMARY: NARA is revising its regulations for use of its facilities. This rule entirely rewrites and reorganizes this portion of NARA's regulations to incorporate several changes, and also to clarify it using plain language. The regulation has been updated to include new rules for public use of the National Archives at College Park, MD, and it also lowers the age at which an unaccompanied child can visit a NARA facility from 16 to 14 years old. This change conforms with an earlier revision of 36 CFR part 1254 that lowered the age at which an individual can conduct research in NARA facilities to 14 years old. This revised regulation governs the public's activity while on NARA property; however, it does not contain rules for conducting research at NARA facilities. Those rules are found in 36 CFR part 1254.

DATES: This rule is effective July 1, 2000.

FOR FURTHER INFORMATION CONTACT: Nancy Allard or Shawn Morton at (301) 713–7360.

SUPPLEMENTARY INFORMATION: NARA published a notice of proposed rulemaking on March 23, 2000 at 65 FR 15592. The comment period ended on May 22, 2000. NARA received no public comments.

Upon further consideration, we have withdrawn the proposed provisions for the use of the Exhibition Hall in the National Archives Building for outside events. Instead, we have modified Subpart D to clarify that we allow Federal, State, and local government entities to use the Exhibition Hall for official functions, with NARA as a cosponsor, and that we may use the Exhibition Hall for activities that further the NARA Strategic Plan. No other changes have been made to the rule.

Information Collections Subject to the Paperwork Reduction Act

The information collections in §§ 1280.48 and 1280.74 are subject to the Paperwork Reduction Act. Under this Act, no persons are required to respond to a collection of information unless it displays a valid OMB control number. OMB has approved the information collection in § 1280.48 with the control number 3095–0040. OMB has approved the information collection in § 1280.74 with the control number 3095–0043.

This rule is not a significant regulatory action for the purposes of Executive Order 12866. As required by the Regulatory Flexibility Act, it is hereby certified that this rule will not have a significant impact on a substantial number of small entities because this regulation will affect individuals wishing to visit a NARA facility, a small number of news organizations wishing to film, and organizations wishing to use NARA public areas for events. This rule does not have any federalism implications.

List of Subjects in 36 CFR Part 1280

Archives and records, Federal buildings and facilities, Reports and recordkeeping requirements.

For the reasons stated in the preamble, the National Archives and Records Administration revises 36 CFR part 1280 to read as follows:

PART 1280—PUBLIC USE OF NARA FACILITIES

Subpart A—What Are the General Rules of Conduct on NARA Property?

General Information on Using NARA Facilities

Sec.
1280.1 What is the purpose of this part?
1280.2 What property is under the control of the Archivist of the United States?
1280.4 Can children under the age of 14 use NARA facilities?
1280.6 May I bring a seeing-eye dog or other assistance animal?
1280.8 Will my belongings be searched?
1280.10 Are there special rules for driving on NARA property?
1280.12 Is parking available?
1280.14 May I use the shuttle bus to travel to the National Archives at College Park or to the National Archives Building in Washington, DC?
1280.16 Are there additional rules posted?

Prohibited Activities

1280.18 May I bring guns or other weapons onto NARA property?
1280.20 What is your policy on illegal drugs and alcohol?
1280.22 Is gambling allowed on NARA property?
1280.24 Is smoking allowed on NARA property?
1280.26 May I pass out fliers on NARA property?
1280.28 Where can I eat and drink on NARA property?
1280.30 Are soliciting, vending, and debt collection allowed on NARA property?
1280.32 What other behavior is not permitted?

Subpart B—What Are the Rules for Filming, Photographing, or Videotaping on NARA Property?

1280.40 Definitions.
1280.42 When do the rules in this subpart apply?
1280.44 May I film, photograph, or videotape on NARA property for commercial purposes?
1280.46 What are the rules for filming, photographing, or videotaping on NARA property for personal use?
1280.48 How do I apply to film, photograph, or videotape on NARA property for news purposes?
1280.50 What will I be allowed to film, photograph, or videotape for news purposes?
1280.52 What are the rules for filming, photographing, or videotaping on NARA property for news purposes?

Subpart C—What Are the Additional Rules for Using NARA Facilities in the Washington, DC, Area?

1280.60 Where do I enter the National Archives Building in Washington, DC?
1280.62 When is the Exhibition Hall open?
1280.64 What entrance should I use to enter the National Archives at College Park?
1280.66 May I use the National Archives Library?
1280.68 May I use the cafeteria at the National Archives at College Park?

Subpart D—How Do I Request to Use Washington, DC, Area NARA Facilities for an Event?

1280.70 When does NARA allow other groups to use its public areas for events?
1280.72 What are the general rules for using NARA public areas?
1280.74 How do I apply to use NARA public areas in Washington, DC, area facilities?
1280.76 What will I have to pay to use a NARA public area for an event?
1280.78 How will NARA handle my request to use a lecture room, the auditorium, the Theater, or the Archivist's Reception Room?
1280.80 May I ask to use the Exhibition Hall?

Subpart E—What Additional Rules Apply for Use of Facilities in Presidential Libraries?

1280.90 What are the rules of conduct while visiting the Presidential libraries?
1280.92 When are the Presidential library museums open to the public?
1280.94 When do Presidential libraries allow other groups to use their public areas for events?
1280.96 Supplemental rules.

Subpart F—What Additional Rules Apply for Use of Public Areas at Regional Records Services Facilities?

1280.100 What are the rules of conduct at NARA regional records services facilities?
1280.102 When do NARA regional records services facilities allow other groups to use their public areas for events?

Authority: 44 U.S.C. 2104(a).

Subpart A—What Are the General Rules of Conduct on NARA Property?

General Information on Using NARA Facilities

§ 1280.1 What is the purpose of this part?

(a) This part tells you what rules you must follow when you use property under the control of the Archivist of the United States (the National Archives Building, the National Archives at College Park, and the Presidential libraries).

(b) When you are using other NARA facilities, the General Services Administration (GSA) regulations, Conduct on Federal Property, at 41 CFR subpart 101–20.3 apply to you. These facilities are the NARA regional records services facilities, the Washington National Records Center in Suitland, MD, and the National Personnel Records Center in St. Louis, MO. The rules in Subpart B of this part also apply to you if you wish to film, take photographs, or make videotapes. The rules in Subpart F of this part also apply to you if you wish to use the NARA-assigned conference rooms in those facilities.

(c) If you are using records in a NARA research room in a NARA facility, you must also follow the rules in 36 CFR part 1254.

§ 1280.2 What property is under the control of the Archivist of the United States?

The following property is under the control of the Archivist of the United States and is defined as ''NARA property'' in this part 1280:

(a) *The National Archives Building.* Property under the control of the Archivist includes:

(1) The Pennsylvania Avenue, NW, entrance between 7th and 9th Streets including the area within the retaining walls on either side of the entrance, inclusive of the statues, and the steps and ramps leading up to the entrance of the building;

(2) On the 7th Street, 9th Street, and Constitution Avenue, NW, sides of the building, all property between the National Archives Building and the curb line of the street, including the sidewalks and other grounds, the steps leading up to the Constitution Avenue entrance, the Constitution Avenue entrance, and the portico area between the steps and the Constitution Avenue entrance.

(3) The National Park Service controls the areas on the Pennsylvania Avenue side of the National Archives Building that are not under the control of the Archivist of the United States.

(b) *The National Archives at College Park.* Property under control of the Archivist includes approximately 37 acres bounded:

(1) On the west by Adelphi Road;

(2) On the north by the Potomac Electric Power Company right-of-way;

(3) On the east by Metzerott Road; and

(4) On the south by the University of Maryland.

(c) *The Presidential Libraries.* Property under control of the Archivist includes the Presidential Libraries and Museums that are listed in 36 CFR 1253.3.

§ 1280.4 Can children under the age of 14 use NARA facilities?

Children under the age of 14 will be admitted to NARA facilities only if they are accompanied by an adult who will supervise them at all times while on NARA property. The director of a NARA facility may authorize a lower age limit for admission of unaccompanied children to meet special circumstances (e.g., students who have been given

permission to conduct research without adult supervision).

§ 1280.6 May I bring a seeing-eye dog or other assistance animal?

Yes, persons with disabilities may bring guide dogs or other animals used for guidance and assistance onto NARA property. You may not bring any other animals into a NARA facility except for official purposes.

§ 1280.8 Will my belongings be searched?

Yes, at any time NARA may inspect all packages, briefcases, and other containers that you bring onto NARA property, including when you are entering or exiting NARA property.

§ 1280.10 Are there special rules for driving on NARA property?

(a) You must obey speed limits, posted signs, and other traffic laws, and park only in designated spaces.

(b) NARA will tow, at the owner's expense, any vehicle that is parked illegally. Except in emergencies, you may not park in spaces reserved for holders of NARA parking permits. If an emergency forces you to leave your vehicle in an illegal area, you must notify the security guards at that NARA facility as soon as possible. We will not tow your illegally parked car if you have notified a security guard of an emergency unless it is creating a hazard or blocking an entrance or an exit.

(c) We may deny any vehicle access to NARA property for public safety or security reasons.

§ 1280.12 Is parking available?

(a) *The National Archives Building.* There is no parking available for researchers or visitors to the National Archives Building. However, this building is easily accessible by bus or subway and there are several commercial parking lots located near the building.

(b) *The National Archives at College Park.* The National Archives at College Park has limited public parking space. The garage is open to the public on a first-come, first-served basis during the hours the research rooms are open. There is public bus service to this building. Individuals and groups visiting the National Archives at College Park are encouraged to use public transportation or car pool to get to the building as the parking lot is often full during our busiest hours.

(c) *Regional records services facilities.* Most regional records services facilities have onsite parking available for researchers. Parking at these facilities and at the Washington National Records Center is governed by GSA regulations, Management of Buildings and Grounds, found at 41 CFR part 101–20. The regional archives on Market Street in Philadelphia and the regional archives in New York City do not have onsite parking. However, there is ample parking in commercial parking garages near these facilities.

(d) *Presidential Libraries.* All of the Presidential Libraries have onsite parking for researchers and museum visitors. Some of the spaces are reserved for staff and for security reasons.

§ 1280.14 May I use the shuttle bus to travel to the National Archives at College Park or to the National Archives Building in Washington, DC?

The NARA shuttle, which travels concurrently each hour between the National Archives Building and the National Archives at College Park, is intended for NARA employees. Other Government employees on official business or researchers may also use the shuttle if space is available. The shuttle operates Monday through Friday, excluding Federal holidays, 8:00 a.m. to 5:00 p.m.

§ 1280.16 Are there additional rules posted?

Yes, there are additional rules posted on NARA property. You must, at all times while on NARA property, comply with official NARA signs and with the directions of the guards and NARA staff.

Prohibited Activities

§ 1280.18 May I bring guns or other weapons onto NARA property?

No, you may not bring firearms or other dangerous or deadly weapons either openly or concealed onto NARA property except for official business. You also may not bring explosives, or items intended to be used to fabricate an explosive or incendiary device, onto NARA property. State-issued concealed-carry permits are not valid on NARA property.

§ 1280.20 What is your policy on illegal drugs and alcohol?

You may not use or be in possession of illegal drugs on NARA property. You also may not enter NARA property while under the influence of illegal drugs or alcohol. Using alcoholic beverages on NARA property is prohibited except for occasions when the Archivist of the United States or his/her designee has granted an exemption in writing.

§ 1280.22 Is gambling allowed on NARA property?

(a) No, you may not participate in any type of gambling while on NARA property. This includes:

(1) Participating in games for money or other personal property;

(2) Operating gambling devices;

(3) Conducting a lottery or pool; or

(4) Selling or purchasing numbers tickets.

(b) This rule does not apply to licensed blind operators of vending facilities who are selling chances for any lottery set forth in a State law and conducted by an agency of a State as authorized by section 2(a)(5) of the Randolph-Sheppard Act (20 U.S.C. 107, *et seq.*)

§ 1280.24 Is smoking allowed on NARA property?

Smoking is not allowed inside any NARA facility.

§ 1280.26 May I pass out fliers on NARA property?

No, you may not distribute or post handbills, fliers, pamphlets or other materials on bulletin boards or elsewhere on NARA property, except in those spaces designated by NARA as public forums. This prohibition does not apply to displays or notices distributed as part of authorized Government activities or bulletin boards used by employees to post personal notices.

§ 1280.28 Where can I eat and drink on NARA property?

You may only eat and drink in designated areas in NARA facilities. Eating and drinking is prohibited in the research, records storage, and museum areas unless specifically authorized by the Archivist or designee.

§ 1280.30 Are soliciting, vending, and debt collection allowed on NARA property?

(a) No, on NARA property you may not:

(1) Solicit for personal, charitable, or commercial causes;

(2) Sell any products;

(3) Display or distribute commercial advertising; or

(4) Collect private debts.

(b) If you are a NARA employee or contractor, you may participate in national or local drives for funds for welfare, health or other purposes that are authorized by the Office of Personnel Management and/or approved by NARA (e.g. the Combined Federal Campaign). Also, nothing in this section prohibits employees from activities permitted under the Standards of Ethical Conduct and Office of Government Ethics rules.

§ 1280.32 What other behavior is not permitted?

We reserve the right to remove anyone from NARA property who is:

(a) Stealing NARA property;

(b) Willfully damaging or destroying NARA property;

(c) Creating any hazard to persons or things;

(d) Throwing anything from or at a NARA building;

(e) Improperly disposing of rubbish.

(f) Acting in a disorderly fashion;

(g) Acting in a manner that creates a loud or unusual noise or a nuisance;

(h) Acting in a manner that unreasonably obstructs the usual use of NARA facilities:

(i) Acting in a manner that otherwise impedes or disrupts the performance of official duties by Government and contract employees;

(j) Acting in a manner that prevents the general public from obtaining NARA-provided services in a timely manner; or

(k) Loitering.

Subpart B—What Are the Rules for Filming, Photographing, or Videotaping on NARA Property?

§ 1280.40 Definitions.

(a) *Filming, photographing, or videotaping for commercial purposes.* Any filming, photographing, or videotaping to promote commercial enterprises or commodities.

(b) *News filming, photographing, or videotaping.* Any filming, photographing, or videotaping done by a commercial or non-profit news organization that is intended for use in a television or radio news broadcast, newspaper, or periodical.

(c) *Personal use filming, photographing, or videotaping.* Any filming, photographing, or videotaping intended solely for personal use that will not be commercially distributed.

§ 1280.42 When do the rules in this subpart apply?

(a) These rules apply to anyone who is filming, photographing, or videotaping inside any NARA-run facility and while on NARA property.

(b) Filming, photographing, and videotaping on the grounds of any NARA regional records services facility, or on the grounds surrounding the Washington National Records Center are governed by GSA regulations, Management of Buildings and Grounds, found at 41 CFR part 101–20, and must be approved by a GSA official.

§ 1280.44 May I film, photograph, or videotape on NARA property for commercial purposes?

No, filming, photographing, and videotaping on NARA property for commercial purposes is prohibited.

§ 1280.46 What are the rules for filming, photographing, or videotaping on NARA property for personal use?

(a) You may film, photograph, or videotape outside a NARA facility so long as you do not impede vehicular or pedestrian traffic.

(b) You may film, photograph, or videotape inside a NARA facility during regular business hours in public areas, including research rooms and exhibition areas, under the following conditions:

(1) You may not use a flash or other supplemental lighting;

(2) You may not use a tripod or similar equipment; and

(3) You may not film, photograph, or videotape while on the interior steps or ramp leading to the Declaration of Independence, the Constitution, and the Bill of Rights in the Exhibition Hall of the National Archives Building.

§ 1280.48 How do I apply to film, photograph, or videotape on NARA property for news purposes?

(a) If you wish to film, photograph, or videotape for news purposes at the National Archives Building, the National Archives at College Park, or the Washington National Records Center, you must request permission from the NARA Public Affairs Officer, 8601 Adelphi Road, College Park, Maryland, 20740–6001.

(b) If you wish to film, photograph, or videotape for news purposes at a Presidential library or at a regional records services facility, you must contact the director of the library (see 36 CFR 1253.3 for contact information) or regional records services facility (see 36 CFR 1253.6 for contact information) to request permission.

(c) Your request for permission to film, photograph, or videotape for news purposes must contain the following information:

(1) The name of the organization you are working for;

(2) Areas you wish to film, photograph, or videotape;

(3) Documents, if any, you wish to film;

(4) The purpose of the project you are working on;

(5) What you intend to do with the film, photograph, or videotape; and

(6) How long you will need to complete your work on NARA property.

(d) You must request permission at least one week in advance of your desired filming date. If you make a request within a shorter time period, we may not be able to accommodate your request.

(e) OMB control number 3095—0040 has been assigned to the information collection contained in this section.

(f) This section does not apply to you if you have permission to use your own microfilming equipment to film archival records and donated historical materials under the provisions of 36 CFR 1254.90 through 1254.102. You must follow the procedures in 36 CFR part 1254 for permission to film archival records and donated materials for research purposes or for microfilm publications.

§ 1280.50 What will I be allowed to film, photograph, or videotape for news purposes?

(a) NARA will permit you to film, photograph, or videotape sections of the interior or exterior of any NARA facility only for stories about:

(1) NARA programs;

(2) NARA exhibits;

(3) NARA holdings;

(4) NARA services;

(5) A former President;

(6) A researcher who has made or is making use of NARA holdings (provided that the researcher also approves your request); or

(7) Any other NARA-related activity approved by the appropriate NARA representative.

(b) NARA reserves the right to reject any request that does not meet the criteria set forth in 36 CFR 1280.50(a) and (c) or because of scheduling or staffing constraints.

(c) We will not grant you permission to film, photograph, or videotape if you intend to use the film, photographs, or videotape for commercial, partisan political, sectarian, or similar activities.

§ 1280.52 What are the rules for filming, photographing, or videotaping on NARA property for news purposes?

The following conditions and restrictions apply to anyone that has been granted permission to film, photograph, or videotape for news purposes under Subpart B:

(a) NARA may limit or prohibit use of artificial light in connection with the filming, photographing, or videotaping of documents for news purposes. You may not use any supplemental lighting devices while filming, photographing, or videotaping inside a NARA facility in the Washington, DC, area without the prior permission of the NARA Public Affairs Officer. If the Public Affairs Officer approves your use of artificial lighting in the Exhibition Hall, NARA will use facsimiles in place of the Declaration of Independence, the Constitution, and the Bill of Rights. If NARA approves your use of high intensity lighting, NARA will cover or replace with facsimiles all other exhibited documents that fall within the boundaries of such illumination. You

may not use any supplemental lighting devices at the Presidential Libraries and the regional records services facilities without permission from a NARA representative at that facility.

(b) On a case-by-case basis, the Public Affairs Officer or other appropriate NARA representative may grant you permission to film, photograph, or videotape in stack areas containing unclassified records.

(c) While filming, photographing, or videotaping, you are liable for injuries to people or property that result from your activities on NARA property.

(d) At all times while on NARA property, you must conduct your activities in accordance with all applicable NARA regulations contained in this part.

(e) Your filming, photographing, or videotaping activity may not impede people who are entering or exiting any NARA facility unless otherwise authorized by the facility's director, or by the NARA Public Affairs Officer for Washington, DC, area facilities.

(f) You must be accompanied by a NARA staff member when filming, photographing, or videotaping the interior of any NARA facility.

(g) NARA will approve your request to do press interviews of NARA personnel on NARA property only when such employees are being interviewed in connection with official business. Interviews with NARA staff and researchers may take place only in areas designated by the NARA Public Affairs Officer for Washington, DC, area facilities, or by the appropriate NARA representative at other NARA facilities.

(h) You may film and photograph documents only in those areas which the NARA Public Affairs Staff designates in the National Archives Building, the National Archives at College Park, or the Washington National Records Center or in those areas designated as appropriate by the staff liaison at other NARA facilities.

(i) We will limit your film and photography sessions to two hours.

(j) You may not state or imply that NARA approves of or will sponsor:

(1) Your activities or views; or

(2) The uses to which you put images depicting any NARA facility.

Subpart C—What Are the Additional Rules for Using NARA Facilities in the Washington, DC, Area?

§ 1280.60 Where do I enter the National Archives Building in Washington, DC?

(a) To conduct research or official business, you must enter the Pennsylvania Avenue entrance of the National Archives Building.

(b) To visit the Exhibition Hall of the National Archives Building, you must enter through the Constitution Avenue entrance. However, the guards are authorized to admit through the Pennsylvania Avenue entrance and the Main Floor gates visitors who:

(1) Are using wheelchairs or other medical appliances;

(2) Are pushing strollers; or

(3) Have other medical or physical conditions that preclude using the steps at the Constitution Avenue entrance.

§ 1280.62 When is the Exhibition Hall open?

You may enter the Exhibition Hall from 10 a.m. to 9 p.m. except during winter months (the day after Labor Day through March 31) when the Exhibition Hall closes at 5:30 p.m. The Archivist of the United States reserves the authority to close the Exhibition Hall to the public at any time for special events or other purposes. The building is closed on December 25.

§ 1280.64 What entrance should I use to enter the National Archives at College Park?

You may enter the National Archives at College Park facility only through the main entrance on Adelphi Road. This entrance will be open to visitors during normal business hours described in 36 CFR 1253.2. Commercial deliveries must be made at the loading dock which is accessible only from Metzerott Road.

§ 1280.66 May I use the National Archives Library?

The National Archives Library facilities in the National Archives Building and in the National Archives at College Park are operated to meet the needs of researchers and NARA staff members. If you are not conducting research in archival materials at NARA, NARA Library staff will refer you to public libraries and other possible sources for such published materials.

§ 1280.68 May I use the cafeteria at the National Archives at College Park?

Yes, the cafeteria at the National Archives at College Park is open to the public during normal business hours.

Subpart D—How Do I Request to Use Washington, DC, Area NARA Facilities for an Event?

§ 1280.70 When does NARA allow other groups to use its public areas for events?

(a) All public areas in NARA facilities are intended for official NARA functions. However, if NARA does not have an event scheduled in a particular area, we may allow the use of that area for an event sponsored by another Federal agency or private group. The event must comply with the conditions in this subpart.

(b) In the National Archives Building, you may request to use the following areas:

Area	Capacity
Theater	216 persons.
Archivist's reception room.	70 to 150 persons.
Conference rooms	30 to 70 persons.

(c) In the National Archives at College Park, you may request to use the following areas:

Area	Capacity
Auditorium	332 persons.
Lecture rooms	30 to 70 persons (or up to 300 with all dividers removed).

§ 1280.72 What are the general rules for using NARA public areas?

You must adhere to the following rules when using any NARA facility for an event:

(a) Any use of NARA public areas for an event must be for the benefit of or in connection with the archival and records activities administered by NARA and must be consistent with the public perception of NARA as a research and cultural institution as articulated in our Strategic Plan.

(b) The event must be sponsored, cosponsored, or authorized by NARA.

(c) You are not allowed to charge an admission fee or make any indirect assessment for admission, and you may not otherwise collect money at the event unless specifically authorized by the Archivist of the United States for special not-for-profit events which are held by organizations sponsored by NARA. Commercial advertising or the sale of any items is not permitted.

(d) No areas on NARA property may be used to promote commercial enterprises or products or for partisan political, sectarian, or similar purposes.

(e) Use of NARA public areas will not be authorized for any organization or group that engages in discriminatory practices proscribed by the Civil Rights Act of 1964, as amended.

(f) You must not misrepresent your identity to the public nor conduct any activities in a misleading or fraudulent manner.

(g) You must ensure that no Government property is destroyed, displaced, or damaged during your use of NARA public areas. You must take prompt action to replace, return, restore, repair or repay NARA for any damage

caused to Government property during the use of NARA facilities.

(h) Most areas are available from 8 a.m. until 9:30 p.m., Monday through Friday, and from 9:00 a.m. until 4:30 p.m. on Saturday. A NARA staff member must be present at all times when the NARA facility is in use. If the facilities and staff are available, NARA may approve requests for events that would be held before or after these hours.

(i) You must provide support people as needed to register guests, distribute approved literature, name tags, and other material; and

(j) NARA must approve any item that you plan to distribute or display at the event, and any notice or advertisement that mentions NARA, the National Archives Trust Fund Board, or incorporates any of the seals described in 36 CFR 1200.2.

§ 1280.74 How do I apply to use NARA public areas in Washington, DC, area facilities?

(a) *How do I request to use a NARA public space for an event?* To request the use of a NARA public space in the Washington, DC, area, you must complete NA Form 16008, Application for Use of Space. OMB control number 3095–0043 has been assigned to the information collection contained in this section. Copies of the form are available from the Facilities and Materiel Management Services Division, National Archives and Records Administration, 8601 Adelphi Road, College Park, Maryland, 20740–6001. Completed forms must be sent to this address.

(b) *When do I need to submit my request?* You must submit requests for use of NARA public areas at least 30 calendar days before the proposed event is to occur.

§ 1280.76 What will I have to pay to use a NARA public area for an event?

(a) Non-Federal organizations will be required to make a contribution to the National Archives Trust Fund to maintain the public area and to cover the cost of additional cleaning, guard and other required services. NARA will determine how much your contribution will be, based upon the level of NARA-provided services for your event.

(b) Federal agencies using these spaces for official government functions must reimburse NARA only for the cost of additional cleaning, security, and other staff services.

(c) An estimate of the costs can be obtained by contacting the Facilities and Materiel Management Services Division, National Archives and Records Administration, 8601 Adelphi Road, College Park, Maryland, 20740–6001.

§ 1280.78 How will NARA handle my request to use a lecture room, the auditorium, the Theater, or the Archivist's Reception Room?

(a) When you request use of a NARA lecture room, auditorium, the Theater, or the Archivist's Reception Room, the Facilities and Materiel Management Services Division will review your request:

(1) To ensure that it meets all of the provisions in this subpart;

(2) To determine if the room you have requested is available on the date and time you have requested; and

(3) To determine the cost of the event.

(b) When the Facilities and Materiel Management Services Division has completed this review, they will notify you of their decision. They may ask for additional information before deciding whether or not to approve your event.

(c) NARA reserves the right to reject or require changes in any material, activity, or caterer you intend to use for the event.

§ 1280.80 May I ask to use the Exhibition Hall?

(a) The Exhibition Hall is primarily used for the public exhibition of the Charters of Freedom and other documents from NARA's holdings. NARA also uses the Exhibition Hall for activities that further its Strategic Plan. Therefore, the use of the Exhibition Hall for private events is not permitted. In rare circumstances, NARA does, upon application, permit other Federal agencies, quasi-Federal agencies, and State and local governments to use the Exhibition Hall for official functions, with NARA as a co-sponsor. Governmental groups that use the Exhibition Hall for official functions must reimburse NARA for the cost of additional cleaning, security, and other staff services.

Subpart E—What Additional Rules Apply for Use of Facilities in Presidential Libraries?

§ 1280.90 What are the rules of conduct while visiting the Presidential libraries?

In addition to the rules in Subpart A, when visiting the museums of the Presidential Libraries, you may be required to check all of your parcels and luggage in areas designated by Library staff.

§ 1280.92 When are the Presidential library museums open to the public?

(a) The hours of operation at Presidential Library museums vary. Please contact the individual facility you wish to visit for the hours of operation. See 36 CFR 1253.3 for Presidential Library contact information. All Presidential Library museums are closed on Thanksgiving, December 25, and January 1, with the exception of the Lyndon Baines Johnson Library Museum, which is closed only on December 25.

(b) See 36 CFR 1253.3 for the operating hours of the research rooms of the Presidential Libraries.

§ 1280.94 When do Presidential libraries allow other groups to use their public areas for events?

(a) Although Presidential Library buildings and grounds are intended primarily for the libraries' use in carrying out their programs, you may request the use of Presidential Library facilities when the proposed activity is:

(1) Sponsored, cosponsored, or authorized by the library;

(2) Conducted to further the library's interests; and

(3) Scheduled so as not to interfere with the normal operation of the library.

(b) Your event at the library must be for the benefit of or in connection with the mission and programs of the library and must be consistent with the public perception of the library as a research and cultural institution.

(c) To request the use of a library area, you must apply in writing to the library director (see 36 CFR 1253.3 for the address) and complete NA Form 16011, Application for Use of Space in Presidential Libraries. OMB control number 3095–0024 has been assigned to the information collection contained in this section.

(d) You may not use library facilities for any activities that involve:

(1) Profit making;

(2) Commercial advertising and sales;

(3) Partisan political activities;

(4) Sectarian activities, or other similar activities; or

(5) Any use inconsistent with those authorized in this section.

(e) You may not charge admission fees, indirect assessment, or take any other kind of monetary collection at the event. NARA will charge normal admission fees to the museum if that area is used for the event.

(f) You will be assessed additional charges by the library director to reimburse the Government for expenses incurred as a result of your use of the library facility.

§ 1280.96 Supplemental rules.

Library directors may establish appropriate supplemental rules governing use of Presidential libraries and adjacent buildings and areas under NARA control.

Subpart F—What Additional Rules Apply for Use of Public Areas at Regional Records Services Facilities?

§ 1280.100 What are the rules of conduct at NARA regional records services facilities?

While at any NARA regional records services facility, you are subject to the GSA regulations, Conduct on Federal Property (41 CFR subpart 101–20.3).

§ 1280.102 When do NARA regional records services facilities allow other groups to use their public areas for events?

(a) Although NARA regional records services facility auditoriums and other public spaces in the facility buildings and the facility grounds are intended primarily for the use of the NARA regional records services facility in carrying out its programs, you may request to use one of these areas for lectures, seminars, meetings, and similar activities when these activities are:

(1) Sponsored, cosponsored, or authorized by the NARA regional records services facility;

(2) To further NARA's interests; and

(3) Scheduled so as not to interfere with the normal operation of the NARA regional records services facility.

(b) Your event at the NARA regional records services facility must be for the benefit of or in connection with the mission and programs of NARA.

(c) You must ask permission to use a public area at a NARA regional records services facility from the director of that facility (see 36 CFR 1253.6 for a list of addresses).

(d) NARA regional records services facilities will not allow use of any auditoriums or other public spaces for any activities that involve:

(1) Profit making;

(2) Commercial advertising and sales;

(3) Partisan political activities;

(4) Sectarian activities, or other similar activities; or

(5) Any use inconsistent with those authorized in this section.

(e) You may not charge admission fees, indirect assessment, or take any other kind of monetary collection at the event.

(f) You will be assessed a charge by the facility director to reimburse the Government for expenses incurred as a result of the your use of the facility.

Dated: May 26, 2000.

John W. Carlin,

Archivist of the United States.

[FR Doc. 00–13810 Filed 5–31–00; 8:45 am]

BILLING CODE 7515–01–P

GENERAL SERVICES ADMINISTRATION

41 CFR Part 102–36

[FPMR Amendment H–205]

RIN 3090–AF39

Disposition of Excess Personal Property; Correction

AGENCY: Office of Governmentwide Policy, GSA.

ACTION: Final rule; correction.

SUMMARY: This document corrects an error contained in a final rule appearing in Part III of the **Federal Register** of Tuesday, May 16, 2000 (64 FR 31218). The rule revised the Federal Property Management Regulations (FPMR) by moving coverage on the disposition of excess personal property into the Federal Management Regulation (FMR) and adding a cross-reference to the FPMR to direct readers to the coverage in the FMR.

EFFECTIVE DATE: May 30, 2000.

FOR FURTHER INFORMATION CONTACT: Martha Caswell, Director, Personal Property Management Policy Division (MTP), 202–501–3828.

SUPPLEMENTARY INFORMATION: In rule document 00–11921 beginning on page 31218 in the issue of Tuesday, May 16, 2000, make the following correction:

§ 102–36.330 [Corrected]

1. On page 31228, in the second column, in § 102–36.330, paragraph (1) is correctly designated as paragraph (a); paragraph (2) is correctly designated as paragraph (b); paragraph (3) is correctly designated as paragraph (c).

Dated: May 26, 2000.

Sharon A. Kiser,

Federal Acquisition Policy Division, Office of Governmentwide Policy.

[FR Doc. 00–13669 Filed 5–31–00; 8:45 am]

BILLING CODE 6820–24–P

DEPARTMENT OF HEALTH AND HUMAN SERVICES

Health Care Financing Administration

42 CFR Part 403

[HCFA–4005–IFC]

RIN 0938–AJ67

Medicare Program; State Health Insurance Assistance Program (SHIP)

AGENCY: Health Care Financing Administration (HCFA), HHS.

ACTION: Interim final rule with comment period.

SUMMARY: This interim final rule explains the terms and conditions that apply to grants to States for counseling and assistance to Medicare beneficiaries, and makes several minor technical clarifications about program compliance. We also specify our policies regarding the treatment of funds associated with the management of this program, including user fee assessments not in effect when prior regulations were issued. This interim final rule is issued in accordance with section 4360 of the Omnibus Budget Reconciliation Act of 1990 (OBRA '90) and section 1857(e)(2) of the Social Security Act (the Act).

DATES: *Effective date:* These regulations are effective on July 3, 2000.

Comment date: Comments will be considered if we receive them at the appropriate address, as provided below, no later than 5:00 p.m. on July 31, 2000.

ADDRESSES: Mail an original and 3 copies of written comments to the following address: Health Care Financing Administration, Department of Health and Human Services, Attention: HCFA–4005–IFC, P.O. Box 8010, Baltimore, MD 21244–8010.

If you prefer, you may deliver your written comments (1 original and 3 copies) to one of the following addresses:

Room 443–G, Hubert H. Humphrey Building, 200 Independence Avenue, SW., Washington, DC 20201, or

Room C5–16–03, 7500 Security Boulevard, Baltimore, Maryland 21244–1850.

Because of staffing and resource limitations, we cannot accept comments by facsimile (FAX) transmission. In commenting, please refer to file code HCFA–4005–IFC. Comments received timely will be available for public inspection as they are received, generally beginning approximately 3 weeks after publication of a document, in Room 443–G of the Department's offices at 200 Independence Avenue, SW., Washington, DC, on Monday through Friday of each week from 8:30 a.m. to 5 p.m., phone: (202) 690–7890).

FOR FURTHER INFORMATION CONTACT: Eric Lang, (410) 786–3199.

I. Background

A. OBRA '90

Section 4360 of the Omnibus Budget Reconciliation Act of 1990 (OBRA '90), Public Law 101–508, requires us to make grants to States, Commonwealths, and Territories for health insurance advisory service programs for Medicare beneficiaries. (Hereinafter, unless otherwise indicated, the term ''State'' or

''States'' includes the 50 States, the District of Columbia, the Commonwealth of Puerto Rico, the Virgin Islands, Guam, and American Samoa.) Grants are available to provide information, counseling, and assistance relating to Medicare, Medicaid, Medicare supplemental policies, long-term care insurance, and other health insurance benefit information. This funding program is known as the State Health Insurance Assistance Program (SHIP), formerly called the Health Insurance Information Counseling and Assistance (ICA) Grants Program. The name of this program was changed to SHIP in FY 1998 when it became apparent that the most recent name of the program, Beneficiary Services and Information Grants Program (BSI), severely lacked public recognition.

On August 26, 1992, we published a final rule with comment period (57 FR 38616) that established the funding level for health insurance grants during Federal fiscal year (FY) 1992–1993. The provisions incorporated into our regulations at 42 CFR part 403, subpart E, defined program eligibility criteria, minimum funding levels, limitations and reporting requirements. On October 7, 1994, we published a final rule with comment period (59 FR 51125) that included amendments to the 1992 rule and established a regulatory basis for continued funding beyond FY 1993. As set forth in that rule, grant awards are based on a 12-month period, with an option to renew at the close of the fiscal year.

Section 403.502 of our regulations, Availability of grants, specifies that HCFA awards funds to States subject to Congressional appropriations of funds and, if applicable, subject to the satisfactory progress in the State's project during the preceding grant period. The criteria by which progress is evaluated and the performance standards for determining whether satisfactory progress has been made is specified in the notice of grant award sent to each State. HCFA advises each State as to when to make application and provides information as to the timing of the grant award and the duration of the grant award. HCFA also provides an estimate of the amount of funds that may be available to the State.

Section 403.504, Number and size of grants, establishes that each eligible State submitting an acceptable application receives a grant for new programs and enhancement of existing programs.

Section 403.504(b)(1) provides that each State, with the exception of American Samoa, the Virgin Islands and Guam, is eligible to receive a ''fixed'' award of $75,000. American Samoa, the Virgin Islands and Guam are each eligible to receive a fixed grant award of $25,000. The fixed grant constitutes the minimum level of funding required by section 4360(a) of OBRA '90. In addition, § 403.504(b)(2) provides that each State is also eligible to receive a ''variable'' award, that is calculated according to the formula set forth therein.

Previously, HCFA depended upon specific Congressional appropriations to fund SHIP. In 1995, the Congressional appropriations were discontinued and funding for the program since that time has been made from the HCFA program management budget. Additional funds are available from the Medicare+Choice (M+C) user fee assessment, as discussed below.

SHIP grants are now in the seventh and final period of the initial solicitation that was issued in FY 1992. DHHS grant administration requirements, set forth in HHS Chapter 1–85, Grants Administration Manual, section 1–85–40A, Incremental Funding-Project Periods and Frequency of Competition, specify that no project may be supported longer than 7 years without recompetition. When we apply for a continuation of funding for the SHIP next year, we will also send out new solicitation and grant application packages to the States.

B. BBA of 1997

Amendments to the Act have led to the creation of additional funding for SHIP. On August 5, 1997, the Act was amended by the Balanced Budget Act (the BBA) of 1997, which established a new Part C of the Medicare program, sections 1851 through 1859, known as the ''Medicare+Choice Program'' (M+C).

Section 1851(d)(1) of the Act, ''Providing information to promote informed choice,'' requires us to provide for activities to broadly disseminate information to Medicare beneficiaries (and prospective Medicare beneficiaries) on available M+C coverage options in order to promote an active, informed selection among these options. Section 1857(e)(2)(A) of the Act, ''Cost-sharing in enrollment-related costs,'' authorizes us to charge and collect an administration or user fee from M+C organizations for the purpose of administering this information dissemination program. Any amounts collected in accordance with section 1857(e)(2) are specifically authorized to be appropriate only for the purpose of carrying out section 1851 (relating to enrollment and dissemination of information) and section 4360 of OBRA '90 (SHIP).

II. Provisions of the Interim Final Rule

We are amending our regulations to provide for a 2-tiered approach for making grants under SHIP. Section 403.504(a) is revised to provide that for aggregate annual expenditures of up to $10 million, grants will be made according to the current procedures set forth in § 403.504. That is, each eligible State will receive a fixed as well as variable amount as set forth in paragraphs (b) and (c) of that section. We plan to continue to fund this first tier of grants from our program management budget and through any Congressional appropriations made for the purpose of implementing this program.

With respect to the second tier, any grants that exceed a total of $10 million annually will be made at our discretion according to criteria that will be communicated to States through the grant solicitation process (See revised § 403.504(a)). We have decided to notify States of the criteria for awarding the grants rather than publish specific criteria in our regulations in order to give us the flexibility required by the dynamic nature of the health care industry.

The statutory foundation for the current SHIP directed the focus of this program primarily on informing beneficiaries about their rights and options in regard to supplemental insurance. Since that time, changes in the climate of the health care industry, including, for example, Medicare reform, the implementation of the M+C program, and ongoing consolidation within the managed care industry, have introduced a host of issues that have profoundly changed access to services, and greatly increased the need for accurate and unbiased information to support informed choice and decision-making among beneficiaries.

Significant issues have emerged that affect and confuse beneficiaries. For example, health care options available today require coverage and payment choices by beneficiaries. Rapidly emerging issues, such as managed care plan withdrawals, create an urgent need for quick response to the concerns of affected beneficiaries and their care givers. Greater choice for beneficiaries requires SHIPs to modify, and in many instances, expand, their programs, both in the size and scope of services they provide.

Our policies must have the flexibility to accommodate changes facing the Medicare program and its beneficiaries. Therefore, we will use our discretion to allocate the additional funds in ways that will best serve beneficiaries through

SHIP. This will allow us to adapt to the particular needs of beneficiaries at a given time.

We are revising § 403.502, Availability of grants, to reflect the change in the source of grant awards. This change clarifies that we award grants to States subject to fund availability, and if applicable, subject to the satisfactory progress in the State's project during the preceding grant period.

We are revising § 403.504, Number and size of grants, at paragraph (a) to specify that, for available grant funds, up to and including $10,000,000, grants will be apportioned to States according to the grant award process currently in place. We are also revising paragraph (b) to highlight the availability of funds as a condition of award.

We are revising § 403.508, Limitations, at paragraph (a) to emphasize the fact that States receiving grants under this subpart must use the grant money in accordance with the terms and conditions specified in the notice of grant award.

III. Response to Comments

Because of the large number of items of correspondence we normally receive on **Federal Register** documents published for comment, we are not able to acknowledge or respond to them individually. We will consider all relevant comments we receive by the date and time specified in the **DATES** section of this preamble, and, when we proceed with a subsequent document, we will respond to the comments in the preamble to that document.

IV. Waiver of Proposed Rulemaking

We ordinarily publish a notice of proposed rulemaking in the **Federal Register** and provide a period for public comment before the provisions of a rule are made final. Publication of a notice of proposed rulemaking may be waived if we find there is good cause that prior notice and comment are impractical, unnecessary, or contrary to public interest. Because the changes effected in this rule are not substantive, but, rather are procedural and technical in nature, and serve primarily to explain our policies, we have determined that notice and comment is not required. In addition, under 42 U.S.C. 1395hh (a)–(b), notice and comment is not required where a statute specifically permits a regulation to be issued in interim final form. Section 4207(j) of Public Law No. 101–508, the same legislation (OBRA '90) containing section 4360, which established the grants that are the subject of this regulation, specifically authorizes the Secretary to implement section 4360 by interim final rule. Nevertheless, we are providing a 60-day period for public comment on this rule. We will consider relevant comments that are received timely, and will respond to those comments and make changes in a subsequent document as appropriate and necessary.

V. Collection of Information Requirements

This interim final rule does not impose any information collection and recordkeeping requirements that are subject to review by the Office of Management and Budget under the Paperwork Reduction Act of 1995.

VI. Regulatory Impact Statement

We have examined the impacts of this interim final rule as required by Executive Order (E.O.) 12866, the Unfunded Mandates Reform Act of 1995 (Public Law 104–4), the Regulatory Flexibility Act (RFA) (5 U.S.C. sections 601–612) (Public Law 96–354), and section 1102(b) of the Social Security Act.

Executive Order 12866 directs agencies to assess all costs and benefits of available regulatory alternatives and when regulation is necessary, to select regulatory approaches that maximize net benefits (including potential economic, environmental, public health and safety effects, distributive impacts, and equity). A regulatory impact analysis (RIA) must be prepared for significant regulatory action that may have economically significant effects ($100 million or more annually). For purpose of E.O. 12866, this interim final rule is not expected to have an impact that meets the economically significant threshold.

The Unfunded Mandates Reform Act of 1995 (UMRA) applies to general notices of proposed rulemaking and final rules for which a general notice of proposed rulemaking was published. Thus, this interim final rule is not subject to the requirements of the UMRA. Despite its inapplicability, this rule is not a ''significant regulatory action'' within the meaning of the UMRA. Section 202 of the Unfunded Mandates Reform Act of 1995 requires agencies to prepare an assessment of anticipated costs and benefits before publishing any rule that may result in an expenditure in any year by State, local, or tribal governments, in the aggregate, or by the private sector, of $100 million or more. We have determined that this interim final rule will not result in such an expenditure.

The RFA requires agencies to analyze options for regulatory relief of small entities. For purposes of the RFA, small entities include small businesses, certain non-profit organizations and small governmental jurisdictions. We generally prepare a regulatory flexibility analysis that is consistent with the RFA unless we certify that an interim final rule will not have a significant impact on a substantial number of small entities. The impact of this rule will fall primarily on States and individuals. For purposes of the RFA, we do not consider States or individuals to be small entities. We have not prepared an analysis for the RFA because we have determined, and certify, that this interim final rule has no significant economic impact on small entities.

Section 1102(b) of the Social Security Act (the Act) requires us to prepare a regulatory impact analysis (RIA) if a rule or regulation may have a significant impact on the operations of a substantial number of small rural hospitals. This analysis must conform to the provisions of section 604 of the RFA. For purposes of section 1102(b) of the Act, we define a small rural hospital as a hospital that is located outside of a Metropolitan Statistical Area and has fewer than 50 beds.

We have not prepared an analysis for section 1102(b) of the Act because we have determined that this interim final rule has no significant economic impact on a substantial number of small rural hospitals.

In accordance with the provisions of Executive Order 12866, this interim final rule with comment period was not reviewed by the Office of Management and Budget.

List of Subjects in 42 CFR Part 403

Health insurance, Hospitals, Intergovernmental relations, Medicare, Reporting and Recordkeeping requirements.

42 CFR part 403 is amended as follows:

PART 403—SPECIAL PROGRAMS AND PROJECTS

1. The authority citation for part 403 continues to read as follows:

Authority: Secs. 1102 and 1871 of the Social Security Act (42 U.S.C. 1302 and 1395hh).

2. Section 403.502 is revised to read as follows:

§ 403.502 Availability of grants.

HCFA awards grants to States subject to availability of funds, and if applicable, subject to the satisfactory progress in the State's project during the preceding grant period. The criteria by which progress is evaluated and the performance standards for determining

whether satisfactory progress has been made are specified in the terms and conditions included in the notice of grant award sent to each State. HCFA advises each State as to when to make application, what to include in the application, and provides information as to the timing of the grant award and the duration of the grant award. HCFA also provides an estimate of the amount of funds that may be available to the State.

3. In § 403.504, paragraph (a) and the introductory text of paragraph (b), are revised to read as follows:

§ 403.504 Number and size of grants.

(a) *General.* For available grant funds, up to and including $10,000,000, grants will be made to States according to the terms and formula in paragraphs (b) and (c) of this section. For any available grant funds in excess of $10,000,000, distribution of grants will be at the discretion of HCFA, and will be made according to criteria that HCFA will communicate to the States via grant solicitation. HCFA will provide information to each State as to what must be included in the application for grant funds. HCFA awards the following type of grants:

(1) New program grants.

(2) Existing program enhancement grants.

(b) *Grant Award.* Subject to the availability of funds, each eligible State that submits an acceptable application receives a grant that includes a fixed amount (minimum funding level) and a variable amount.

* * * * *

4. Section 403.508(a) is revised to read as follows:

§ 403.508 Limitations.

(a) *Use of grants.* Except as specified in paragraph (b) of this section, and in the terms and conditions in the notice of grant award, a State that receives a grant under this subpart may use the grant for any reasonable expenses for planning, developing, implementing, and/or operating the program for which the grant is made as described in the solicitation for application for the grant.

* * * * *

(Catalog of Federal Domestic Assistance Program No. 93.773, Medicare—Hospital Insurance; and Program No. 93.774, Medicare—Supplementary Medical Insurance Program)

Dated: December 3, 1999.

Nancy-Ann Min DeParle,

Administrator, Health Care Financing Administration.

Approved: March 27, 2000.

Donna E. Shalala,

Secretary.

[FR Doc. 00–13601 Filed 5–31–00; 8:45 am]

BILLING CODE 4120–01–P

DEPARTMENT OF HEALTH AND HUMAN SERVICES

Office of the Secretary

Office of Inspector General

45 CFR Part 5b

RIN 0991–AA99

Privacy Act; Implementation

AGENCY: Office of Inspector General (OIG), HHS.

ACTION: Final rule.

SUMMARY: This final rule exempts the new system of records, the Healthcare Integrity and Protection Data Bank (HIPDB), from certain provisions of the Privacy Act (5 U.S.C. 552a). The establishment of the HIPDB is required by section 1128E of the Social Security Act (the Act), as added by section 221(a) of the Health Insurance Portability and Accountability Act (HIPAA) of 1996. Section 1128E of the Act directed the Secretary to establish a national health care fraud and abuse data collection program for the reporting and disclosing of certain final adverse actions taken against health care providers, suppliers or practitioners, and to maintain a data base of final adverse actions taken against health care providers, suppliers and practitioners. Regulations implementing the new HIPDB were published in the **Federal Register** on October 26, 1999 (64 FR 57740). The exemption being set forth in this rule applies to investigative materials compiled for law enforcement purposes.

EFFECTIVE DATE: This rule is effective on June 1, 2000.

FOR FURTHER INFORMATION CONTACT: Rick Burguieres, Investigative Policy and Information Management Staff, Office of Investigations, (202) 205–5200.

SUPPLEMENTARY INFORMATION:

I. The Healthcare Integrity and Protection Data Bank

The Health Insurance Portability and Accountability Act (HIPAA) of 1996, Public Law 104–191, requires the Secretary, acting through the Office of Inspector General (OIG) and the United States Attorney General, to establish a new health care fraud and abuse control program to combat health care fraud and abuse (see section 1128C of the Act, as enacted by section 201(a) of HIPAA). Among the major steps in this program is the establishment of a national data bank to receive and disclose certain final adverse actions against health care providers, suppliers, or practitioners (see section 1128C(a)(1)(E) of the Act). The establishment of the data bank is required by section 1128E of the Act (added by section 221(a) of HIPAA), which directs the Secretary to maintain a data base of such final adverse actions. Final adverse actions include: (1) Civil judgments against a health care provider, supplier, or practitioner in Federal or State court related to the delivery of a health care item or service; (2) Federal or State criminal convictions against a health care provider, supplier, or practitioner related to the delivery of a health care item or service; (3) actions by Federal or State agencies responsible for the licensing and certification of health care providers, suppliers, or practitioners; (4) exclusion of a health care provider, supplier, or practitioner from participation in Federal or State health care programs; and (5) any other adjudicated actions or decisions that the Secretary establishes by regulations. Settlements in which no findings or admissions of liability have been made will be excluded from reporting. However, any final adverse action that emanates from such settlements, and that would otherwise be reportable under the statute, is to be reported to the data bank. Final adverse actions are to be reported, regardless of whether such actions are being appealed by the subject of the report (see section 1128E(b)(2)(C) of the Act). Final regulations implementing the statutory requirements of section 1128E of the Act and establishing the new HIPDB were published in the **Federal Register** on October 26, 1999 (64 FR 57740).

Groups that have access to this new data bank system include Federal and State government agencies; health plans; and self queries from health care suppliers, providers and practitioners. Reporting is limited to the same groups that have access to the information. One of the primary purposes of these data will be use of this information by a Federal or State government agency charged with the responsibility of investigating or prosecuting a case where there is an indication of a violation or potential violation of law, whether civil, criminal or regulatory in nature. The information in this system

may also be used in the preparation for a trial or hearing for such violation.

II. Summary of the Proposed Rule

On October 26, 1999, the Department also published, through the Office of Inspector General, a proposed rule (64 FR 57619) to exempt this new records system from certain provisions of the Privacy Act.[1] This proposed exemption was intended to protect, from release to the record subject, information on law enforcement queries to the data bank, to exempt the data bank from Privacy Act access and amendment procedures in order to establish access and amendment procedures in the HIPDB regulations. The proposed rule specifically sought public comments on the proposed exemption.

In accordance with the rulemaking, record subjects would be guaranteed access to, and correction rights for, substantive information reported to the HIPDB. The procedures, set out in 45 CFR part 61, use the Privacy Act access and correction procedures as a basic framework while, at the same time, providing significant additional rights (such as automatic notification to the record subject of any report filed with the data bank). Data bank subjects would also have broader rights on HIPDB correction procedures, including the right to file a statement of disagreement as soon as a report is filed with the data bank.

III. Response to Public Comments

In response to the proposed rule, we received timely-filed public comments from two health professional organizations. Set forth below is a summary of those comments and our response to those concerns.

Comment: One commenter believed that the provisions to exempt the HIPDB from provisions of the Privacy Act were duplicative and unnecessary. The commenter believed that this waiver was not necessary since the Privacy Act already contains an exemption for law enforcement queries.

Response: The commenter is correct that a law enforcement agency may request information from the HIPDB by having an appropriate official formally file a written request under 5 U.S.C. 552a(b)(7). Such queries are not available to the subject of the Privacy Act record under 5 U.S.C. 552a(c)(3). However, requiring law enforcement agencies to use the more cumbersome process of submitting requests in writing defeats one of the primary purposes of the HIPDB, which is to provide for instant, online access to data for its designated users, including law enforcement agencies.[2] Therefore, disclosures to law enforcement agencies will generally be made in accordance with the routine use provision of the Privacy Act, 5 U.S.C. 552a(b)(3), and this exemption is necessary to protect the queries from release to the record subject.

Comment: One commenter stated that the proposed modification to 45 CFR 5b.11(b)(2)(ii) appeared to exempt *all* queries from the history disclosure requirement of the Privacy Act, rather than just those that are made by law enforcement agencies. The commenter indicated, however, that nothing in proposed subparagraph (F) of this section would limit the exemption to law enforcement queries.

Response: As stated in the proposed rule, subjects will have access to information on all other queries to the data bank. The exemption is only intended to protect against harm to ongoing investigations. Under the HIPDB implementing regulations (October 26, 1999; 64 FR 57740), information reports made available to the report subjects will include all other query information.

Comment: One association indicated their support of the proposed modification regarding the exemption of law enforcement agencies from the Privacy Act, but recommended that the regulatory agencies, such as dental boards, also be included in the exemption.

Response: As indicated above, the exemption is designed to protect only law enforcement queries permitted by the statute. If a governmental agency is entitled to access the HIPDB for law enforcement purposes, that query would be covered by the exemption. Questions on what types of queries are ''law enforcement'' queries can always be raised with the OIG's Office of Investigations' Investigative Policy and Information Management Staff at (202) 205–5200.

IV. Regulatory Impact Statement

The Office of Management and Budget has reviewed this final rule in accordance with the provisions of Executive Order 12866, the Unfunded Mandates Reform Act and Executive Order 13132, and has determined that this rule does not meet the criteria for an economically siginificant regulatory action.

Specifically, Executive Order 12866 directs agencies to assess all costs and benefits of available regulatory alternatives and, when rulemaking is necessary, to select regulatory approaches that maximize net benefits, including potential economic, environmental, public health, safety distributive and equity effects. Section 202 of the Unfunded Mandates reform Act, Public Law 104–4, requires that agencies prepare an assessment of anticipated costs and benefits on any rule that may result in an expenditure by State, local or tribe governments, or by the private sector, of $100 million or more in any given year. In addition, under the Small Business Enforcement Act (SBEA) of 1996, if a rule has a significant economic effect on a substantial number of small businesses, the Secretary must specifically consider the economic effect of a rule on small business entities and analyze regulatory options that could lessen the impact of the rule. Further, Executive Order 13132, Federalism, requires agencies to determine if a rule will have a significant effect on States, on their relationship with the Federal Government, and on the distribution of power and responsibility among the various levels of government.

In accordance with the exemption being set forth in this rule, while the reports of adverse actions to the HIPDB will be known to the subjects of the records in the data bank, the access and use of such information by law enforcement agencies would not be known to the subjects of the records. As indicated above, we believe that disclosure of this information could have a negative impact and compromise ongoing law enforcement activities.

We believe that the aggregate economic impact of this final rule is minimal and will have no effect of the economy or on Federal or State expenditures. Similarly, we believe that there are no significant costs associated with this Privacy Act exemption that will impose any mandates on State, local or tribal governments or on the private sector that will result in an expenditure of $100 million or more in any given year. In addition, in accordance with the provisions of the

[1] Subsections (c)(3), (d)(1)–(4), and (e)(4)(G) and (H) of the Privacy Act, in accordance with 5 U.S.C. 522a(k)(2) and 45 CFR 5b.11(b)(ii)(F).

[2] The HIPAA, which mandates that the HIPDB information be available to law enforcement agencies, requires that the HIPDB be established to function in coordination with the existing National Practitioner Data Bank—a computerized system that functions exclusively by electronic reporting and on-line access by users (42 U.S.C. 1320a07e(f)). Further, section IV of the *Health Care Fraud and Abuse Control Program and Guidelines,* issued by the Attorney General and the Secretary of HHS under HIPAA, calls for the establishment of an adverse action data bank with electronic reporting and on-line access by authorized users to minimize costs and maximize response times.

SEBA and the threshold criteria of Executive Order 13132, the Secretary certifies that this exemption will not have a significant impact on a substantial number of small entities, and will not significantly affect the rights, roles and responsibilities of States, and that a full analysis under these Acts is not necessary.

List of Subjects in 5 CFR Part 5b

Privacy.

Accordingly, the Department's Privacy Act regulations at 45 CFR part 5b are amended as set forth below:

PART 5b—[AMENDED]

Part 5b are amended as follows:

1. The authority citation for part 5b continue to read as follows:

Authority: 5 U.S.C. 301, 5 U.S.C. 552a.

2. Section 5b.11 is amended by adding a new paragraph (b)(2)(ii)(F) to read as follows:

§ 5b.11 Exempt systems.

* * * * *

(b) *Specific systems of records exempt.* * * *

(2) * * *

(ii) * * *

(F) Investigative materials compiled for law enforcement purposes for the Healthcare Integrity and Protection Data Bank (HIPDB), of the Office of Inspector General. (See § 61.15 of this title for access and correction rights under the HIPDB by subjects of the Data Bank.)

* * * * *

Dated: March 7, 2000.

June Gibbs Brown,

Inspector General.

Approved: March 20, 2000.

Donna E. Shalala,

Secretary.

[FR Doc. 00–13602 Filed 5–31–00; 8:45 am]

BILLING CODE 4152–01–P

FEDERAL COMMUNICATIONS COMMISSION

47 CFR Part 73

[DA 00–1122; MM Docket No. 98–198; RM–9304, RM–9492, RM–9548, RM–9547]

Radio Broadcasting Services; Cross Plains, Allen, Benbrook, Brownwood, Burkburnett, Campbell, Clifton, Coleman, Commerce, Detroit, Graham, Granbury, Haskell, Kerens, Mason, Jacksboro, McKinney, Muenster, San Saba, Snyder, Terrell, Vernon, Waco, and Wichita Falls, TX; Alva, Anadarko, Antlers, Ardmore, Atoka, Comanche, Dickson, Duncan, Durant, Eldorado, Hugo, and Lone Grove, OK

AGENCY: Federal Communications Commission.

ACTION: Final rule, petition for reconsideration.

SUMMARY: In response to a request by Jayson D. Fritz and Janice M. Fritz, this document dismisses a Petition for Partial Reconsideration directed to the *Report and Order* in this proceeding. *See* 63 FR 63016, November 10, 1998. With this action, this docketed proceeding is terminated.

FOR FURTHER INFORMATION CONTACT: Robert Hayne, Mass Media Bureau (202) 418–2177.

SUPPLEMENTARY INFORMATION: This is a synopsis of the *Order* in MM Docket No. 98–198 adopted May 18, 2000, and released May 19, 2000. The full text of this decision is available for inspection and copying during normal business hours in the FCC Reference Center at Portals ll, CY–A257, 445 12th Street, SW, Washington, D.C. The complete text of this decision may also be purchased from the Commission's copy contractor, International Transcription Service, Inc., (202) 857–3805, 1231 20th Street, NW, Washington, D.C. 20036.

List of Subjects in 47 CFR Part 73

Radio broadcasting.

Federal Communications Commission.

John A. Karousos,

Chief, Allocations Branch, Policy and Rules Division, Mass Media Bureau.

[FR Doc. 00–13595 Filed 5–31–00; 8:45 am]

BILLING CODE 6712–01–U

FEDERAL COMMUNICATIONS COMMISSION

47 CFR Part 73

[DA 00–1062; MM Docket No. 99–341; RM–9776]

Radio Broadcasting Services; Gwinn, MI

AGENCY: Federal Communications Commission.

ACTION: Final rule.

SUMMARY: This document allots Channel 262C3 to Gwinn, Michigan, in response to a petition filed by AFB/Gwinn Broadcasting. *See* 64 FR 68665, December 8, 1999. The coordinates for Channel 262C3 at Gwinn are 46–17–20 NL and 87–21–10 WL. There is a site restriction 6.8 kilometers (4.3 miles) east of the community. Canadian concurrence has been received for the allotment of Channel 262C3 at Gwinn. With this action, this docketed proceeding is terminated. A filing window for Channel 262C3 at Gwinn will not be opened at this time. Instead, the issue of opening a filing window for this channel will be addressed by the Commission in a subsequent order.

DATES: Effective June 26, 2000.

FOR FURTHER INFORMATION CONTACT: Kathleen Scheuerle, Mass Media Bureau, (202) 418–2180.

SUPPLEMENTARY INFORMATION: This is a summary of the Commission's Report and Order, MM Docket No. 99–341, adopted May 3, 2000, and released May 12, 2000. The full text of this Commission decision is available for inspection and copying during normal business hours in the Commission's Reference Center, 445 12th Street, SW, Washington, DC. The complete text of this decision may also be purchased from the Commission's copy contractors, International Transcription Services, Inc., 1231 20th Street, NW., Washington, DC 20036, (202) 857–3800, facsimile (202) 857–3805.

List of Subjects in 47 CFR Part 73

Radio broadcasting.

Part 73 of title 47 of the Code of Federal Regulations is amended as follows:

PART 73—[AMENDED]

1. The authority citation for part 73 continues to read as follows:

Authority: 47 U.S.C. 154, 303, 334 and 336.

§ 73.202 [Amended]

2. Section 73.202(b), the Table of FM Allotments under Michigan, is amended by adding Gwinn, Channel 262C3.

Federal Communications Commission.

John A. Karousos,

Chief, Allocations Branch, Policy and Rules Division, Mass Media Bureau.

[FR Doc. 00–13594 Filed 5–31–00; 8:45 am]

BILLING CODE 6712–01–P

FEDERAL COMMUNICATIONS COMMISSION

47 CFR Part 73

[DA 00–1053; MM Docket No. 99–270; RM–9703]

Radio Broadcasting Services; Taos, NM

AGENCY: Federal Communications Commission.

ACTION: Final rule.

SUMMARY: The Commission, at the request of Darren Cordova, allots Channel 240A to Taos, NM, as the community's third local FM service. *See* 64 FR 47484, August 31, 1999. Channel 240A can be allotted to Taos in compliance with the Commission's minimum distance separation requirements with a site restriction of 9.7 kilometers (6.0 miles) southeast, at coordinates 36–21–48 NL; 105–28–51 WL, to avoid a short-spacing to the proposed allotment of Channel 240A at Chama, NM. *See*, MM Docket 99–116, 64 FR 23036, April 29, 1999. A filing window for Channel 240A at Taos will not be opened at this time. Instead, the issue of opening a filing window for this channel will be addressed by the Commission in a subsequent order.

DATES: Effective June 26, 2000.

FOR FURTHER INFORMATION CONTACT: Leslie K. Shapiro, Mass Media Bureau, (202) 418–2180.

SUPPLEMENTARY INFORMATION: This is a synopsis of the Commission's Report and Order, MM Docket No. 99–270, adopted May 3, 2000, and released May 12, 2000. The full text of this Commission decision is available for inspection and copying during normal business hours in the FCC Reference Center (Room 239), 445 12th Street, SW, Washington, DC. The complete text of this decision may also be purchased from the Commission's copy contractor, International Transcription Services, Inc., (202) 857–3800, 1231 20th Street, NW, Washington, DC 20036.

List of Subjects in 47 CFR Part 73

Radio broadcasting.

Part 73 of title 47 of the Code of Federal Regulations is amended as follows:

PART 73—[AMENDED]

1. The authority citation for part 73 continues to read as follows:

Authority: 47 U.S.C. 154, 303, 334. 336.

§ 73.202 [Amended]

2. Section 73.202(b), the Table of FM Allotments under New Mexico, is amended by adding Channel 240A at Taos.

Federal Communications Commission.

John A. Karousos,

Chief, Allocations Branch, Policy and Rules Division, Mass Media Bureau.

[FR Doc. 00–13593 Filed 5–31–00; 8:45 am]

BILLING CODE 6712–01–P

FEDERAL COMMUNICATIONS COMMISSION

47 CFR Part 73

[DA No. 00–1000; MM Docket No. 99–337; RM–9524]

Radio Broadcasting Services; Santa Anna, TX

AGENCY: Federal Communications Commission.

ACTION: Final rule.

SUMMARY: This document allots Channel 288C3 at Santa Anna, Texas, in response to a petition filed by Wagonwheel Broadcasting of Santa Anna. *See* 64 FR 68663, December 8, 1999. The coordinates for Channel 288C3 at Santa Anna are 31–37–38 NL and 99–20–03 WL. There is a site restriction 12.7 kilometers (7.9 miles) south of the community. Mexican concurrence has been received for Channel 288C3 at Santa Anna. With this action, this docketed proceeding is terminated. A filing window for Channel 288C3 at Santa Anna will not be opened at this time. Instead, the issue of opening a filing window for this channel will be addressed by the Commission in a subsequent order.

DATES: Effective June 26, 2000.

FOR FURTHER INFORMATION CONTACT: Kathleen Scheuerle, Mass Media Bureau, (202) 418–2180.

SUPPLEMENTARY INFORMATION: This is a summary of the Commission's Report and Order, MM Docket No. 99–337, adopted April 26, 2000, and released May 12, 2000. The full text of this Commission decision is available for inspection and copying during normal business hours in the Commission's Reference Center, 445 12th Street, SW, Washington, DC. The complete text of this decision may also be purchased from the Commission's copy contractors, International Transcription Services, Inc., 1231 20th Street, NW., Washington, DC. 20036, (202) 857–3800, facsimile (202) 857–3805.

List of Subjects in 47 CFR Part 73

Radio broadcasting.

Part 73 of title 47 of the Code of Federal Regulations is amended as follows:

PART 73—[AMENDED]

1. The authority citation for part 73 continues to read as follows:

Authority: 47 U.S.C. 154, 303, 334 and 336.

§ 73.202 [Amended]

2. Section 73.202(b), the Table of FM Allotments under Texas, is amended by adding Santa Anna, Channel 288C3.

Federal Communications Commission.

John A. Karousos,

Chief, Allocations Branch, Policy and Rules Division, Mass Media Bureau.

[FR Doc. 00–13703 Filed 5–31–00; 8:45 am]

BILLING CODE 6712–01–U

FEDERAL COMMUNICATIONS COMMISSION

47 CFR Part 73

[DA 00–1061; MM Docket No. 99–359; RM–9784]

Radio Broadcasting Services; Powers, MI

AGENCY: Federal Communications Commission.

ACTION: Final rule.

SUMMARY: This document allots Channel 297C3 to Powers, Michigan, in response to a petition filed by Lyle R. Evans. *See* 64 FR 73461, December 30, 1999. The coordinates for Channel 297C3 at Powers are 45–41–12 NL and 87–31–30 WL. Canadian concurrence has been received for the allotment of Channel 297C3 at Powers. With this action, this docketed proceeding is terminated. A filing window for Channel 297C3 at Powers will not be opened at this time. Instead, the issue of opening a filing window for this channel will be addressed by the Commission in a subsequent order.

DATES: Effective June 26, 2000.

FOR FURTHER INFORMATION CONTACT: Kathleen Scheuerle, Mass Media Bureau, (202) 418–2180.

SUPPLEMENTARY INFORMATION: This is a summary of the Commission's Report and Order, MM Docket No. 99–359, adopted May 3, 2000 and released May 12, 2000. The full text of this

Commission decision is available for inspection and copying during normal business hours in the Commission's Reference Center, 445 12th Street SW, Washington, DC. The complete text of this decision may also be purchased from the Commission's copy contractors, International Transcription Services, Inc., 1231 20th Street NW, Washington, DC 20036; (202) 857–3800, facsimile (202) 857–3805.

List of Subjects in 47 CFR Part 73

Radio broadcasting.

Part 73 of title 47 of the Code of Federal Regulations is amended as follows:

PART 73—[AMENDED]

1. The authority citation for part 73 continues to read as follows:

Authority: 47 U.S.C. 154, 303, 334 and 336.

§ 73.202 [Amended]

2. Section 73.202(b), the Table of FM Allotments under Michigan, is amended by adding Powers, Channel 297C3.

Federal Communications Commission.

John A. Karousos,

Chief, Allocations Branch, Policy and Rules Division, Mass Media Bureau.

[FR Doc. 00–13704 Filed 5–31–00; 8:45 am]

BILLING CODE 6712–01–U

FEDERAL COMMUNICATIONS COMMISSION

47 CFR Part 73

[DA 00–1063; MM Docket No. 99–334; RM–9772]

Radio Broadcasting Services; Carney, MI

AGENCY: Federal Communications Commission.

ACTION: Final rule.

SUMMARY: This document allots Channel 260A to Carney, Michigan, in response to a petition filed by Escanaba License Corp. *See* 64 FR 68664, December 8, 1999. The coordinates for Channel 260A at Carney are 45–35–30 NL and 87–39–37 WL. There is a site restriction 7.8 kilometers (4.9 miles) west of the community. Canadian concurrence has been received for the allotment of Channel 260A at Carney. With this action, this docketed proceeding is terminated. A filing window for Channel 260A at Carney will not be opened at this time. Instead, the issue of opening a filing window for this channel will be addressed by the Commission in a subsequent order.

DATES: Effective June 26, 2000.

FOR FURTHER INFORMATION CONTACT: Kathleen Scheuerle, Mass Media Bureau, (202) 418–2180.

SUPPLEMENTARY INFORMATION: This is a summary of the Commission's Report and Order, MM Docket No. 99–334, adopted May 3, 2000, and released May 12, 2000. The full text of this Commission decision is available for inspection and copying during normal business hours in the Commission's Reference Center, 445 12th Street, SW, Washington, DC. The complete text of this decision may also be purchased from the Commission's copy contractors, International Transcription Services, Inc., 1231 20th Street, NW., Washington, DC. 20036, (202) 857–3800, facsimile (202) 857–3805.

List of Subjects in 47 CFR Part 73

Radio broadcasting.

Part 73 of title 47 of the Code of Federal Regulations is amended as follows:

47 CFR PART 73—[AMENDED]

1. The authority citation for part 73 continues to read as follows:

Authority: 47 U.S.C. 154, 303, 334 and 336.

§ 73.202 [Amended]

2. Section 73.202(b), the Table of FM Allotments under Michigan, is amended by adding Carney, Channel 260A.

Federal Communications Commission.

John A. Karousos,

Chief, Allocations Branch, Policy and Rules Division, Mass Media Bureau.

[FR Doc. 00–13705 Filed 5–31–00; 8:45 am]

BILLING CODE 6712–01–U

FEDERAL COMMUNICATIONS COMMISSION

47 CFR Part 73

[DA 00–1054; MM Docket Nos. 98–130, 99–56; RM–9297, RM–9655, RM–9459]

Radio Broadcasting Services; Saratoga, Green River, Big Piney and LaBarge, Wyoming

AGENCY: Federal Communications Commission.

ACTION: Final rule.

SUMMARY: The Commission, at the request of Mountain Tower Broadcasting, dismisses the petition for rulemaking requesting the allotment of Channel 259C at Saratoga, Wyoming, and grants the counterproposal filed by Mount Rushmore Broadcasting, Inc. requesting the allotment of Channel 259A at Saratoga, as the community's first aural transmission service and the allotment of Channel 259C1 at Green River, Wyoming, as the community's second FM transmission service. It also dismisses as moot the request of Robert R. Rule d/b/a Rule Communications requesting that a site restriction be placed on Channel 259C at Saratoga, to clear its application for Station KRRR(FM) Cheyenne, Wyoming. *See* 63 FR 39803 (July 24, 1998) (MM Docket No. 98–130). This document also dismisses as defective the petition for rule making filed by Mountain West Broadcasting (MM Docket No. 99–56) 64 FR 08786 (February 23, 1999), requesting the allotment of Channel 259C at Big Piney, Wyoming because it was short-spaced to Channel 259C1 at Green River when it was filed. Counterproposals for Channels 251A at Big Piney and 261A at La Barge, Wyoming filed in response to the dismissed Big Piney proposal will be considered as petitions for rule making in a separate proceeding. *See* **SUPPLEMENTARY INFORMATION.**

DATES: Effective June 26, 2000.

FOR FURTHER INFORMATION CONTACT: Victoria M. McCauley, Mass Media Bureau, (202) 418–2180.

SUPPLEMENTARY INFORMATION: This is a synopsis of the Commission's Report and Order, MM Docket Nos. 98–130 and 99–56, adopted May 3, 2000, and released May 12, 2000. The full text of this Commission decision is available for inspection and copying during normal business hours in the FCC Reference Center (Room 239), 445 12th Street, SW., Washington, DC. The complete text of this decision may also be purchased from the Commission's copy contractor, International Transcription Services, Inc., (202) 857–3800, 1231 20th Street, NW., Washington, DC 20036.

Channel 259A can be allotted to Saratoga at coordinates 41–27–12 and 106–48–30, and Channel 259C1 can be allotted to Green River, Wyoming, at coordinates 41–31–36 and 109–28–06 in compliance with the Commission's minimum distance separation requirements, with respect to domestic allotments, without the imposition of a site restriction. A filing window for Channels 259A and 259C1 will not be opened at this time. Instead, the issue of opening a filing window for these channels will be addressed by the Commission in a subsequent Order.

List of Subjects in 47 CFR Part 73

Radio broadcasting.

Part 73 of title 47 of the Code of Federal Regulations is amended as follows:

47 CFR PART 73—[AMENDED]

1. The authority citation for part 73 continues to read as follows:

Authority: 47 U.S.C. 154, 303, 334 and 336.

§ 73.202 [Amended]

2. Section 73.202(b), the Table of FM Allotments under Wyoming, is amended by adding Saratoga, Channel 259A and Channel 259C1 at Green River.

Federal Communications Commission.

John A. Karousos,

Chief, Allocations Branch, Policy and Rules Division, Mass Media Bureau.

[FR Doc. 00–13699 Filed 5–31–00; 8:45 am]

BILLING CODE 6712–01–U

FEDERAL COMMUNICATIONS COMMISSION

47 CFR Part 73

[DA 00–1108; MM Docket Nos. 99–140, 99–146; RM–9490, RM–9723, RM–9724, RM–9725]

Radio Broadcasting Services; North Tunica and Friars Point, Mississippi, Kennett, Missouri, Munford, Tennessee, and Marianna, Arkansas

AGENCY: Federal Communications Commission.

ACTION: Final rule.

SUMMARY: The Allocations Branch combines two proceedings, MM Docket Nos. 99–140 and 99–146. This document reallots Channel 255C from Kennett, Missouri to Munford, Tennessee, as the community's first local aural transmission service as requested by Legend Broadcasting in a counterproposal in MM Docket No. 99–140. It also allots Channel 254A at Friars Point, Mississippi, requested in separate counterproposals filed by Legend and Delta Radio Inc. in MM Docket No. 99–146. It also grants Fred Flinn's request to dismiss his petition for rulemaking for the allotment of Channel 254A at North Tunica, Mississippi in MM Docket No. 99–146. Pursuant to agreements between Legend Broadcasting and Ken Reynolds d/b/a Bear Creek Radio, and Olvie Sisk, this document dismisses Bear Creek Radio's counterproposal filed in MM Docket No. 99–140 requesting the allotment of Channel 254A at Marianna, Arkansas and Olvie Sisk's comments in MM Docket No. 99–146 in support of the allotment of Channel 254A at North Tunica, Mississippi. *See Supplementary Information.*

DATES: Effective July 3, 2000.

FOR FURTHER INFORMATION CONTACT: Victoria M. McCauley, Mass Media Bureau, (202) 418–2180.

SUPPLEMENTARY INFORMATION: This is a synopsis of the Commission's Report and Order, MM Docket Nos. 99–140 and 99–146, adopted May 10, 2000, and released May 19, 2000. The full text of this Commission decision is available for inspection and copying during normal business hours in the FCC Reference Center (Room 239), 445 12th Street, SW., Washington, DC. The complete text of this decision may also be purchased from the Commission's copy contractor, International Transcription Services, Inc., (202) 857–3800, 1231 20th Street, NW., Washington, DC 20036.

Channel 255C can be reallotted to Munford, Tennessee, at coordinates 35–46–53 and 89–36–46, at a site 41.2 kilometers (25.6 miles) northeast of the community, and Channel 254A can be allotted to Friars Point, Mississippi, at coordinates 34–24–09 and 90–38–51 at a site 4.2 kilometers (2.6 miles) north of the community, in compliance with the Commission's minimum distance separation requirements, with respect to domestic allotments. A filing window for Channels 254A at Friars Point will not be opened at this time. Instead, the issue of opening a filing window for this channel will be addressed by the Commission in a subsequent order.

List of Subjects in 47 CFR Part 73

Radio broadcasting.

Part 73 of title 47 of the Code of Federal Regulations is amended as follows:

47 CFR PART 73—[AMENDED]

1. The authority citation for part 73 continues to read as follows:

Authority: 47 U.S.C. 154, 303, 334 and 336.

§ 73.202 [Amended]

2. Section 73.202(b), the Table of FM Allotments under Mississippi is amended by adding Friars Point, Channel 254A.

3. Section 73.202(b), the Table of FM Allotments under Missouri, is amended by removing Channel 255C at Kennett.

4. Section 73.202(b), the Table of FM Allotments under Tennessee, is amended by adding Munford, Channel 255C.

Federal Communications Commission.

John A. Karousos,

Chief, Allocations Branch, Policy and Rules Division, Mass Media Bureau.

[FR Doc. 00–13700 Filed 5–31–00; 8:45 am]

BILLING CODE 6712–01–U

DEPARTMENT OF COMMERCE

National Oceanic and Atmospheric Administration

50 CFR Part 679

[Docket No. 000211039–0039–01; I.D. 052600B]

Fisheries of the Exclusive Economic Zone Off Alaska; Shallow-Water Species Fishery by Vessels Using Trawl Gear in the Gulf of Alaska

AGENCY: National Marine Fisheries Service (NMFS), National Oceanic and Atmospheric Administration (NOAA), Commerce.

ACTION: Closure.

SUMMARY: NMFS is prohibiting directed fishing for species that comprise the shallow-water species fishery by vessels using trawl gear in the Gulf of Alaska (GOA), except for vessels fishing for pollock using pelagic trawl gear in those portions of the GOA open to directed fishing for pollock. This action is necessary because the second seasonal apportionment of the 2000 halibut bycatch allowance specified for the trawl shallow-water species fishery in the GOA has been caught.

DATES: Effective 1200 hrs, Alaska local time (A.l.t.), May 28, 2000, until 1200 hrs, A.l.t., July 4, 2000.

FOR FURTHER INFORMATION CONTACT: Mary Furuness, 907–586–7228.

SUPPLEMENTARY INFORMATION: NMFS manages the groundfish fishery in the GOA exclusive economic zone according to the Fishery Management Plan for Groundfish of the Gulf of Alaska (FMP) prepared by the North Pacific Fishery Management Council under authority of the Magnuson-Stevens Fishery Conservation and Management Act. Regulations governing fishing by U.S. vessels in accordance with the FMP appear at subpart H of 50 CFR part 600 and 50 CFR part 679.

The Pacific halibut bycatch allowance for the GOA trawl shallow-water species fishery, which is defined at § 679.21(d)(3)(iii)(A), was established by the Final 2000 Harvest Specifications for Groundfish for the GOA (65 FR 8298, February 18, 2000) for the second season, the period April 1, 2000, through July 3, 2000, as 100 metric tons.

In accordance with § 679.21(d)(7)(i), the Administrator, Alaska Region, NMFS, has determined that the second seasonal apportionment of the 2000 Pacific halibut bycatch allowance specified for the trawl shallow-water species fishery in the GOA has been caught. Consequently, NMFS is

prohibiting directed fishing for species included in the shallow-water species fishery by vessels using trawl gear in the GOA, except for vessels fishing for pollock using pelagic trawl gear in those portions of the GOA open to directed fishing for pollock. The species and species groups that comprise the shallow-water species fishery are: pollock, Pacific cod, shallow-water flatfish, flathead sole, Atka mackerel, and ''other species.''

Maximum retainable bycatch amounts may be found in the regulations at § 679.20(e) and (f).

Classification

This action responds to the best available information recently obtained from the fishery. It must be implemented immediately in order to prevent overharvesting the second seasonal apportionment of the 2000 Pacific halibut bycatch allowance specified for the trawl shallow-water species fishery in the GOA. A delay in the effective date is impracticable and contrary to the public interest. The fleet has already taken the second seasonal bycatch allowance of Pacific halibut. NMFS finds for good cause that the implementation of this action can not be delayed for 30 days. Accordingly, under 5 U.S.C. 553(d), a delay in the effective date is hereby waived.

This action is required by § 679.21 and is exempt from review under E.O. 12866.

Authority: 16 U.S.C. 1801 *et seq.*

Dated: May 26, 2000.

Bruce C. Morehead,

Acting Director, Office of Sustainable Fisheries, National Marine Fisheries Service.

[FR Doc. 00–13684 Filed 5–26–00; 2:35 pm]

BILLING CODE 3510–22–F

DEPARTMENT OF COMMERCE

National Oceanic and Atmospheric Administration

50 CFR Part 679

[Docket No. 000211040–0040–01; I.D. 052600C]

Fisheries of the Exclusive Economic Zone Off Alaska; Greenland Turbot in the Bering Sea Subarea of the Bering Sea and Aleutian Islands Management Area

AGENCY: National Marine Fisheries Service (NMFS), National Oceanic and Atmospheric Administration (NOAA), Commerce.

ACTION: Closure.

SUMMARY: NMFS is prohibiting directed fishing for Greenland turbot in the Bering Sea subarea of the Bering Sea and Aleutian Islands management area (BSAI). This action is necessary to prevent exceeding the 2000 total allowable catch (TAC) of Greenland turbot in this area.

DATES: Effective 1200 hrs, Alaska local time (A.l.t.), May 28, 2000, until 2400 hrs, A.l.t., December 31, 2000.

FOR FURTHER INFORMATION CONTACT: Mary Furuness, 907–586-7228.

SUPPLEMENTARY INFORMATION: NMFS manages the groundfish fishery in the BSAI exclusive economic zone according to the Fishery Management Plan for the Groundfish Fishery of the Bering Sea and Aleutian Islands Area (FMP) prepared by the North Pacific Fishery Management Council under authority of the Magnuson-Stevens Fishery Conservation and Management Act. Regulations governing fishing by U.S. vessels in accordance with the FMP appear at subpart H of 50 CFR part 600 and CFR part 679.

The 2000 TAC of Greenland turbot in the Bering Sea subarea was established by Final 2000 Harvest Specifications of Groundfish for the BSAI (65 FR 8282, February 18, 2000) as 5,764 metric tons (mt). See § 679.20(c)(3)(iii).

In accordance with § 679.20(d)(1)(i), the Administrator, Alaska Region, NMFS (Regional Administrator), has determined that the TAC for Greenland turbot in the Bering Sea subarea will be reached. Therefore, the Regional Administrator is establishing a directed fishing allowance of 4,564 mt, and is setting aside the remaining 1,200 mt as bycatch to support other anticipated groundfish fisheries. In accordance with § 679.20(d)(1)(iii), the Regional Administrator finds that this directed fishing allowance has been reached. Consequently, NMFS is prohibiting directed fishing for Greenland turbot in the Bering Sea subarea.

Maximum retainable bycatch amounts may be found in the regulations at § 679.20(e) and (f).

Classification

This action responds to the best available information recently obtained from the fishery. It must be implemented immediately to prevent overharvesting the 2000 TAC of Greenland turbot for the Bering Sea subarea of the BSAI. A delay in the effective date is impracticable and contrary to the public interest. Further delay would only result in overharvest. NMFS finds for good cause that the implementation of this action should not be delayed for 30 days. Accordingly, under 5 U.S.C. 553(d), a delay in the effective date is hereby waived.

This action is required by § 679.20 and is exempt from review under E.O. 12866.

Authority: 16 U.S.C. 1801 *et seq.*

Dated: May 26, 2000

Bruce C. Morehead,

Acting Director, Office of Sustainable Fisheries, National Marine Fisheries Service.

[FR Doc. 00–13683 Filed 5–26–00; 2:35 pm]

BILLING CODE 3510–22–F

Proposed Rules

Federal Register
Vol. 65, No. 106
Thursday, June 1, 2000

This section of the FEDERAL REGISTER contains notices to the public of the proposed issuance of rules and regulations. The purpose of these notices is to give interested persons an opportunity to participate in the rule making prior to the adoption of the final rules.

DEPARTMENT OF TRANSPORTATION

Federal Aviation Administration

14 CFR Part 39

[Docket No. 97–NM–184–AD]

RIN 2120–AA64

Airworthiness Directives; Airbus Industrie Model A300 B2 and B4 Series Airplanes

AGENCY: Federal Aviation Administration, DOT.

ACTION: Notice of proposed rulemaking (NPRM).

SUMMARY: This document proposes the supersedure of an existing airworthiness directive (AD), applicable to certain Airbus Industrie Model A300 B2 and B4 series airplanes, that currently requires inspection of the fuselage longitudinal lap joints and circumferential joints, and of the stringers and doublers for bonding delamination and cracks; and repairs, as necessary. This action would require expansions of certain inspection areas; revisions of certain inspection thresholds or intervals; changes in references to inspection methods; and the addition of a modification to certain longitudinal lap joints. This proposal is prompted by issuance of mandatory continuing airworthiness information by a foreign civil airworthiness authority. The actions specified by the proposed AD are intended to prevent delamination and cracking of the fuselage, which could result in rapid decompression of the airplane.

DATES: Comments must be received by July 3, 2000.

ADDRESSES: Submit comments in triplicate to the Federal Aviation Administration (FAA), Transport Airplane Directorate, ANM–114, Attention: Rules Docket No. 97–NM–184–AD, 1601 Lind Avenue, SW., Renton, Washington 98055–4056. Comments may be inspected at this location between 9:00 a.m. and 3:00 p.m., Monday through Friday, except Federal holidays.

The service information referenced in the proposed rule may be obtained from Airbus Industrie, 1 Rond Point Maurice Bellonte, 31707 Blagnac Cedex, France. This information may be examined at the FAA, Transport Airplane Directorate, 1601 Lind Avenue, SW., Renton, Washington.

FOR FURTHER INFORMATION CONTACT: Norman B. Martenson, Manager, International Branch, ANM–116, FAA, Transport Airplane Directorate, 1601 Lind Avenue, SW., Renton, Washington 98055–4056; telephone (425) 227–2110; fax (425) 227–1149.

SUPPLEMENTARY INFORMATION:

Comments Invited

Interested persons are invited to participate in the making of the proposed rule by submitting such written data, views, or arguments as they may desire. Communications shall identify the Rules Docket number and be submitted in triplicate to the address specified above. All communications received on or before the closing date for comments, specified above, will be considered before taking action on the proposed rule. The proposals contained in this notice may be changed in light of the comments received.

Comments are specifically invited on the overall regulatory, economic, environmental, and energy aspects of the proposed rule. All comments submitted will be available, both before and after the closing date for comments, in the Rules Docket for examination by interested persons. A report summarizing each FAA-public contact concerned with the substance of this proposal will be filed in the Rules Docket.

Commenters wishing the FAA to acknowledge receipt of their comments submitted in response to this notice must submit a self-addressed, stamped postcard on which the following statement is made: ''Comments to Docket Number 97–NM–184–AD.'' The postcard will be date stamped and returned to the commenter.

Availability of NPRMs

Any person may obtain a copy of this NPRM by submitting a request to the FAA, Transport Airplane Directorate, ANM–114, Attention: Rules Docket No. 97–NM–184–AD, 1601 Lind Avenue, SW., Renton, Washington 98055–4056.

Discussion

On March 27, 1985, the FAA issued AD 85–07–09, amendment 39–5033 (50 FR 13548, April 5, 1985), applicable to certain Airbus Industrie Model A300 B2 and B4 series airplanes, to require inspection of the fuselage longitudinal lap joints and circumferential joints, and of the stringers and doublers for bonding delamination and cracks; and repairs, as necessary. That action was prompted by reports of bonding delamination of these components. The requirements of that AD are intended to prevent rapid decompression of the airplane.

Actions Since Issuance of Previous Rule

Since the issuance of AD 85–07–09, the manufacturer has issued three revised service bulletins that describe expansions of certain inspection areas; revisions of certain inspection thresholds or intervals; and certain changes in references to inspection methods. The manufacturer also has issued a service bulletin that describes procedures for a modification to certain longitudinal lap joints. The Direction Generale de l'Aviation Civile (DGAC), which is the airworthiness authority for France, has advised that those revised or additional actions are necessary in order to adequately protect against bonding delamination or bulging of the fuselage longitudinal lap joints and circumferential joints, or delamination of fuselage stringers and doublers.

Explanation of Relevant Service Information

Airbus has issued Service Bulletin A300–53–148, Revision 11, dated September 8, 1998, which describes procedures for inspection of certain fuselage bonded lap joints and circumferential joints to detect bonding delamination; and repair, if necessary.

Airbus also has issued Service Bulletin A300–53–178, Revision 10, dated September 8, 1998, which describes procedures for inspection of certain fuselage bonded lap joints and circumferential joints to detect corrosion and cracks; and repair, if necessary.

Airbus also has issued Service Bulletin A300–53–149, Revision 14, dated September 8, 1998, which describes procedures for inspection of bonded stringers and doublers to detect debonding; and repair, if necessary.

The DGAC classified these service bulletins as mandatory and issued French airworthiness directive 1984–140–064(B) R3, dated October 6, 1999, in order to assure the continued airworthiness of these airplanes in France.

Airbus also has issued Service Bulletin A300–53–0209, Revision 10, dated July 5, 1999, which describes procedures for the modification of bonded longitudinal lap joints. The modification involves the installation of doublers on longitudinal lap joints at stringers 29 and 35 in section 18. This modification is intended to eliminate the need for bonded lap joint inspections for stringers 29 and 35 in section 18, as specified in Airbus Service Bulletin A300–53–148, Revision 11. The DGAC classified Service Bulletin A300–53–0209 as mandatory and issued French airworthiness directive 97–371–235(B), dated December 3, 1997, in order to assure the continued airworthiness of these airplanes in France.

Accomplishment of the actions specified in the service bulletins described in this section is intended to adequately address the identified unsafe condition.

FAA's Conclusions

This airplane model is manufactured in France and is type certificated for operation in the United States under the provisions of section 21.29 of the Federal Aviation Regulations (14 CFR 21.29) and the applicable bilateral airworthiness agreement. Pursuant to this bilateral airworthiness agreement, the DGAC has kept the FAA informed of the situation described above. The FAA has examined the findings of the DGAC, reviewed all available information, and determined that AD action is necessary for products of this type design that are certificated for operation in the United States.

Explanation of Requirements of Proposed Rule

Since an unsafe condition has been identified that is likely to exist or develop on other airplanes of the same type design registered in the United States, the proposed AD would supersede AD 85–07–09 to require accomplishment of the actions specified in the service bulletins described previously, except as discussed below. Additionally, repetitive inspections are required in paragraph (c) of AD 85–07–09 (as indicated by paragraph (c)(2)), but have been more clearly specified in this proposed AD.

Differences Between Proposed Rule and Service Information

Operators should note that, unlike certain procedures described in the service information, this proposed AD would not permit further flight if cracking or corrosion is detected in the fuselage longitudinal lap joints or circumferential joints, or in the bond of the stringers and doublers. The FAA has determined that, because of the safety implications and consequences associated with such cracking and corrosion, any subject longitudinal lap joint, circumferential joint, or bond of the stringers and doublers that is found to be cracked or corroded must be repaired or modified prior to further flight.

Cost Impact

There are approximately 20 airplanes of U.S. registry that would be affected by this proposed AD.

The inspection of the bonded longitudinal lap joints and circumferential joints to detect bonding delamination that is currently required by AD 85–07–09, and retained in this AD, takes approximately 146 work hours per airplane to accomplish, at an average labor rate of $60 per work hour. Based on these figures, the cost impact of these currently required actions on U.S. operators is estimated to be $175,200, or $8,760 per airplane, per inspection cycle.

The inspection of the bonded longitudinal lap joints and circumferential joints in to detect corrosion and cracking that is currently required by AD 85–07–09, and retained in this AD, takes approximately 72 work hours per airplane to accomplish. Based on these figures, the cost impact of these currently required actions on U.S. operators is estimated to be $86,400, or $4,320 per airplane, per inspection cycle.

The inspections of the bonded stringers and doublers to detect debonding that are currently required by AD 85–07–09, and retained in this AD, take approximately 129 work hours per airplane to accomplish. Based on these figures, the cost impact of these currently required actions on U.S. operators is estimated to be $154,800, or $7,740 per airplane, per inspection cycle.

The modification of the bonded longitudinal lap joint that is proposed in this AD action would take as much as 581 work hours (not including access and close) per airplane to accomplish, at an average labor rate of $60 per work hour. Required parts would cost as much as $16,148 per airplane, depending on kits purchased. Based on these figures, the cost impact of the proposed modification on U.S. operators is estimated to be as high as $1,020,160, or $51,008 per airplane.

The cost impact figures discussed above are based on assumptions that no operator has yet accomplished any of the current or proposed requirements of this AD action, and that no operator would accomplish those actions in the future if this AD were not adopted.

Regulatory Impact

The regulations proposed herein would not have a substantial direct effect on the States, on the relationship between the national Government and the States, or on the distribution of power and responsibilities among the various levels of government. Therefore, it is determined that this proposal would not have federalism implications under Executive Order 13132.

For the reasons discussed above, I certify that this proposed regulation (1) is not a ''significant regulatory action'' under Executive Order 12866; (2) is not a ''significant rule'' under the DOT Regulatory Policies and Procedures (44 FR 11034, February 26, 1979); and (3) if promulgated, will not have a significant economic impact, positive or negative, on a substantial number of small entities under the criteria of the Regulatory Flexibility Act. A copy of the draft regulatory evaluation prepared for this action is contained in the Rules Docket. A copy of it may be obtained by contacting the Rules Docket at the location provided under the caption **ADDRESSES**.

List of Subjects in 14 CFR Part 39

Air transportation, Aircraft, Aviation safety, Safety.

The Proposed Amendment

Accordingly, pursuant to the authority delegated to me by the Administrator, the Federal Aviation Administration proposes to amend part 39 of the Federal Aviation Regulations (14 CFR part 39) as follows:

PART 39—AIRWORTHINESS DIRECTIVES

1. The authority citation for part 39 continues to read as follows:

Authority: 49 U.S.C. 106(g), 40113, 44701.

§ 39.13 [Amended]

2. Section 39.13 is amended by removing amendment 39–5033 (50 FR 13548, April 5, 1985), and by adding a new airworthiness directive (AD), to read as follows:

Airbus Industrie: Docket 97–NM–184–AD. Supersedes AD 85–07–09, Amendment 39–5033.

Applicability: Model A300 B2 and B4 series airplanes, manufacturer serial numbers 003 through 156 inclusive, certificated in any category.

Note 1: This AD applies to each airplane identified in the preceding applicability provision, regardless of whether it has been modified, altered, or repaired in the area subject to the requirements of this AD. For airplanes that have been modified, altered, or repaired so that the performance of the requirements of this AD is affected, the owner/operator must request approval for an alternative method of compliance in accordance with paragraph (f) of this AD. The request should include an assessment of the effect of the modification, alteration, or repair on the unsafe condition addressed by this AD; and, if the unsafe condition has not been eliminated, the request should include specific proposed actions to address it.

Compliance: Required as indicated, unless accomplished previously.

To prevent rapid decompression of the airplane due to bonding delamination and cracking of the fuselage, accomplish the following:

Restatement of Requirements of AD 85–07–09

Delamination Inspections of Longitudinal Lap and Circumferential Joints

(a) Except as required by paragraph (d) of this AD: Prior to the threshold limits specified in Table 1 of Airbus Service Bulletin A300–53–148, Revision 6, dated October 10, 1984, or within 6 months after May 13, 1985 (the effective date of AD 85–07–09), whichever occurs later, inspect the fuselage longitudinal lap joints and circumferential joints for bonding delamination, in accordance with the service bulletin.

(1) If no delamination is detected, repeat these inspections in accordance with the schedule shown in Table 1 of the service bulletin.

(2) If delamination is detected during any inspection, prior to further flight, perform the actions indicated in Figure 3, ''Follow-up Action,'' of the service bulletin.

Corrosion and Crack Inspections of Longitudinal Lap and Circumferential Joints

(b) Except as required by paragraph (d) of this AD: Prior to the threshold limits specified in Figure 1, ''Inspection Program,'' of Airbus Service Bulletin A300–53–178, Revision 4, dated October 10, 1984, or within 6 months after May 13, 1985, whichever occurs later, visually inspect for corrosion and cracks, and repair if necessary, the bonded longitudinal lap joints and circumferential joints specified in Figure 1 of the service bulletin, in accordance with the service bulletin. Repeat the inspections thereafter in accordance with the schedule shown in Figure 1 of the service bulletin.

Delamination Inspections of Stringers and Doublers

(c) Except as required by paragraph (d) of this AD: Prior to the threshold limits specified in Figure 1, ''Inspection Frequency,'' of Airbus Service Bulletin A300–53–149, Revision 6, dated October 10, 1984, or within 6 months after May 13, 1985, whichever occurs later, inspect for debonding, and repair, if necessary, bonded stringers and bonded doublers in the area between frame 1 and frame 18 and between frame 40 and frame 80 on all airplanes up to and including serial number 156, and in the area between frame 18 and frame 40 on all airplanes up to and including serial number 104. Repeat the inspections thereafter at intervals specified in Figure 1 of the service bulletin, except for repaired areas. The inspections of stringers are divided into three areas, as indicated in Figure 2 of the service bulletin, with the following options:

(1) Inspection in Area 1 is not required if Modification No. 2904, described in Airbus Service Bulletin A300–53–146, dated November 28, 1980, has been incorporated.

(2) Preventive riveting of stringers located in Area 2 in accordance with Airbus Service Bulletin A300–53–197, dated October 10, 1984, allows for an extension of the interval of subsequent repetitive inspections to the interval required for Area 3.

New Requirements of This AD

Later Service Bulletin Revisions

(d) After the effective date of this new AD, only the following service bulletin revisions shall be used for compliance thresholds and intervals and for accomplishment instructions for the actions required by this AD, as specified in paragraphs (d)(1), (d)(2), and (d)(3) of this AD. For any airplane that, as of the effective date of this AD, has exceeded a revised threshold or interval for any specified action, accomplish that action within 6 months after the effective date of this AD.

(1) Airbus Service Bulletin A300–53–148, Revision 11, dated September 8, 1998, shall be used for the requirements of paragraph (a) of this AD. For corrective actions and follow-on inspections, Figure 5, ''Follow-up Action,'' of the service bulletin shall be used.

(2) Airbus Service Bulletin A300–53–178, Revision 10, dated September 8, 1998, shall be used for the requirements of paragraph (b) of this AD. For inspection thresholds and intervals, Paragraph C., ''Description,'' of the service bulletin shall be used.

(3) Airbus Service Bulletin A300–53–149, Revision 14, including Appendix 01, dated September 8, 1998, shall be used for the requirements of paragraph (c) of this AD. For inspection thresholds and intervals, Figure 1, Sheet 1, ''Inspection Frequency,'' of the service bulletin shall be used.

Modification of Lap Joints (Partial Terminating Action)

(e) Within 60 months after the effective date of this AD, modify the bonded longitudinal lap joints in accordance with Airbus Service Bulletin A300–53–0209, Revision 10, dated July 5, 1999. Accomplishment of the modification terminates the repetitive inspections required by paragraph (a) of this AD for stringers 29 and 35 in section 18 only.

Alternative Methods of Compliance

(f) An alternative method of compliance or adjustment of the compliance time that provides an acceptable level of safety may be used if approved by the Manager, International Branch, ANM–116, FAA, Transport Airplane Directorate. Operators shall submit their requests through an appropriate FAA Principal Maintenance Inspector, who may add comments and then send it to the Manager, International Branch, ANM–116.

Note 2: Information concerning the existence of approved alternative methods of compliance with this AD, if any, may be obtained from the International Branch, ANM–116.

Special Flight Permits

(g) Special flight permits may be issued in accordance with sections 21.197 and 21.199 of the Federal Aviation Regulations (14 CFR 21.197 and 21.199) to operate the airplane to a location where the requirements of this AD can be accomplished.

Note 3: The subject of this AD is addressed in French airworthiness directives 97–371–235(B), dated December 3, 1997, and 1984–140–064(B)R3, dated October 6, 1999.

Issued in Renton, Washington, on May 25, 2000.

Donald L. Riggin,

Acting Manager, Transport Airplane Directorate, Aircraft Certification Service.

[FR Doc. 00–13695 Filed 5–31–00; 8:45 am]

BILLING CODE 4910–13–U

DEPARTMENT OF COMMERCE

National Oceanic and Atmospheric Administration

15 CFR Part 930

[Docket No. 990723202–9202–01]

RIN 0648—AM88

Coastal Zone Management Act Federal Consistency Regulations

AGENCY: Office of Ocean and Coastal Resource Management (OCRM), National Ocean Service (NOS), National Oceanic and Atmospheric Administration (NOAA), Department of Commerce (DOC).

ACTION: Proposed rule; reopening of public comment period.

SUMMARY: On April 14, 2000, the National Oceanic and Atmospheric Administration (NOAA) proposed to revise the federal consistency regulations. The comment period expired on May 30, 2000. This document reopens the public comment period on the proposed rule until June 15, 2000.

DATES: Comments on the proposed rule will be considered if mailed on or before June 15, 2000.

ADDRESSES: All comments concerning these proposed regulations should be mailed to Joseph A. Uravitch, Chief, Coastal Programs Division, Office of Ocean and Coastal Resource Management (N/ORM3), 1305 East-West Highway, 11th Floor, Silver Spring, MD 20910.

FOR FURTHER INFORMATION CONTACT: David W. Kaiser, Federal Consistency Coordinator, Office of Ocean and Coastal Resource Management (N/ORM3), 1305 East-West Highway, 11th Floor, Silver Spring, MD 20910, Telephone: 301–713–3098, extension 144.

SUPPLEMENTARY INFORMATION: On April 14, 2000, the National Oceanic and Atmospheric Administration (NOA) proposed to revise the federal consistency regulations, 65 FR 20270, April 14, 2000. The time for public comment expired on May 30, 2000. Prior to the expiration of the comment period, OCRM received several requests to extend the time for public comment on the proposed rule. OCRM has decided to extend the original 45 day comment period to 60 days. Because the comment period has already expired, this document reopens the public comment period. The time for the public to submit comments now ends on June 15, 2000.

Dated: May 26, 2000.

John Oliver,

Director, Management and Budget Office, National Ocean Service.

[FR Doc. 00–13685 Filed 5–31–00; 8:45 am]

BILLING CODE 3510–08–M

ENVIRONMENTAL PROTECTION AGENCY

40 CFR Part 434

[FRL–6707–5]

Coal Mining Point Source Category; Amendments to Effluent Limitations Guidelines and New Source Performance Standards; Notice of Public Meetings

AGENCY: Environmental Protection Agency (EPA).

ACTION: Proposed rule; notice of public meetings.

SUMMARY: On April 11, 2000, EPA proposed amendments to the effluent limitations guidelines and new source performance standards for the Coal Mining Point Source Category (65 FR 19440). The comment period on this proposal will close on July 10, 2000. EPA will conduct public meetings at six locations during the comment period. EPA is inviting all interested members of the public to attend these meetings and to present comments. No meeting materials will be distributed in advance.

DATES: EPA will conduct three public meetings in June regarding the proposed regulations for the Coal Remining Subcategory and three additional meetings, also in June, for the Western Alkaline Subcategory. The dates and locations are listed below in the Supplementary Information section.

FOR FURTHER INFORMATION CONTACT: John Tinger at (202) 260–4992 or by e-mail at *''Tinger.John@epa.gov.''* The **Federal Register** notice of proposed rulemaking, fact sheet, and support documents can be obtained from *http://www.epa.gov/OST/guide.*

SUPPLEMENTARY INFORMATION:

Public meetings regarding proposal of effluent limitations and standards for the Coal Remining Subcategory will be held at the following times and locations:

June 13, 2000, starting at 6:00 pm at the West Virginia Division of Environmental Protection, Office of Mining and Reclamation, Training Room, 10 McJunkin Rd., Nitro, WV.

June 14, 2000, starting at 6:00 pm at the Kentucky Department for Surface Mining Reclamation and Enforcement, Training Room, 2 Hudson Hollow Rd., Frankfort, KY.

June 15, 2000, starting at 6:00 pm at the Muskingum Valley Conference Center, Holiday Inn, 4645 East Pike, Zanesville, OH.

Public meetings regarding proposal of effluent limitations and standards for the Western Alkaline Coal Mining Subcategory will be held at the following times and locations:

June 22, 2000, starting at 1:00 pm at the Institute for Tribal Environmental Professionals at Northern Arizona University, University Union Building 30, Havasupai Conference Room, Knoles Drive, Flagstaff, AZ.

June 28, 2000, starting at 9:00 am at the U.S. Department of the Interior, Office of Surface Mining Reclamation and Enforcement, 1999 Broadway, Room 3340, Denver, CO.

June 29, 2000, starting at 1:00 pm at the Best Western Tower West Lodge, 109 North US 14, Gillette, WY.

These meetings will not be recorded by a reporter or transcribed for inclusion in the public record. Comments and speakers are invited at the meetings, but comments to be included in the record must either be submitted in writing at the meetings, or submitted in writing in accordance with the instructions in the notice of proposed rulemaking (65 FR 19440).

Dated: May 22, 2000.

Geoffrey H. Grubbs,

Director, Office of Science and Technology.

[FR Doc. 00–13561 Filed 5–31–00; 8:45 am]

BILLING CODE 6560–50–P

FEDERAL COMMUNICATIONS COMMISSION

47 CFR Part 73

[DA 00–1079; MM Docket No. 00–79, RM–9802]

Radio Broadcasting Services; Jackson and Salyersville, KY

AGENCY: Federal Communications Commission.

ACTION: Proposed rule.

SUMMARY: The Commission requests comments on a petition jointly filed by Intermountain Broadcasting Company and Wallingford Broadcasting Company, Inc., requesting the substitution of Channel 247C2 for Channel 293A at Jackson, Kentucky, and the modification of Station WKSN(FM)'s license accordingly; and the substitution of Channel 293C3 for Channel 247C3 at Salyersville, Kentucky, and the modification of Station WRLV–FM's construction permit accordingly. Channel 247C2 can be allotted at Jackson in compliance with the Commission's minimum distance separation requirements with a site restriction of 13.1 kilometers (8.2 miles) north at Station WJSN(FM)'s requested site. The coordinates for Channel 247C2 at Jackson are 37–40–19 North Latitude and 83–24–21 West Longitude. Additionally, Channel 293C3 can be allotted to Salyersville without the imposition of a site restriction at Station WRLV–FM's requested site. The coordinates for Channel 293C3 at Salyersville are 37–49–05 North Latitude and 83–17–01 West Longitude.

DATES: Comments must be filed on or before July 7, 2000, reply comments on or before July 24, 2000.

ADDRESSES: Federal Communications Commission, Washington, DC 20554. In addition to filing comments with the FCC, interested parties should serve the petitioner, or its counsel or consultant, as follows: John F. Garziglia, Esq., Pepper & Corazzini, L.L.P., 1776 K Street, NW, Suite 200, Washington, DC 20006 (Counsel for Intermountain Broadcasting Company); and Mark N. Lipp, Esq., Shook, Hardy & Bacon, L.L.P., 600 14th Street, NW, Suite 800,

Washington, DC 20005 (Counsel for Wallingford Broadcasting Company, Inc.).

FOR FURTHER INFORMATION CONTACT: Sharon P. McDonald, Mass Media Bureau, (202) 418–2180.

SUPPLEMENTARY INFORMATION: This is a synopsis of the Commission's Notice of Proposed Rule Making, MM Docket No. 00–79, adopted May 10, 2000, and released May 16, 2000. The full text of this Commission decision is available for inspection and copying during normal business hours in the FCC Reference Information Center (Room CY–A257), 445 12th Street, SW, Washington, DC. The complete text of this decision may also be purchased from the Commission's copy contractor, International Transcription Service, Inc., (202) 857–3800, 1231 20th Street, NW, Washington, DC 20036.

Provisions of the Regulatory Flexibility Act of 1980 do not apply to this proceeding.

Members of the public should note that from the time a Notice of Proposed Rule Making is issued until the matter is no longer subject to Commission consideration or court review, all *ex parte* contacts are prohibited in Commission proceedings, such as this one, which involve channel allotments. See 47 CFR 1.1204(b) for rules governing permissible *ex parte* contacts.

For information regarding proper filing procedures for comments, see 47 CFR 1.415 and 1.420.

Federal Communications Commission.

John A. Karousos,

Chief, Allocations Branch, Policy and Rules Division, Mass Media Bureau.

[FR Doc. 00–13599 Filed 5–31–00; 8:45 am]

BILLING CODE 6712–01–P

FEDERAL COMMUNICATIONS COMMISSION

47 CFR Part 73

[DA 00–1111, MM Docket No. 00–82, RM–9841; MM Docket No. 00–83, RM–9842; MM Docket No. 00–84, RM–9855; MM Docket No. 00–85, RM-9868; MM Docket No. 00–86, RM–9869; MM Docket No. 00–87, RM–9870; MM Docket No. 00–88, RM–9871; MM Docket No. 00–89, RM–9872]

Radio Broadcasting Services; McCook, NE; Butte Falls, OR; Jacksonville, GA; Las Vegas, NM; Vale, OR; Brightwood, OR; Dillsboro, NC; Waynesboro, GA

AGENCY: Federal Communications Commission.

ACTION: Proposed rule.

SUMMARY: The Commission requests comments on eight petitions for rule making requesting FM channel allotments at McCook, NE, Butte Falls, OR, Jacksonville, GA, Las Vegas, NM, Vale, OR, Brightwood, OR, Dillsboro, NC, and Waynesboro, GA.

DATES: Comments must be filed on or before July 10, 2000, and reply comments on or before July 25, 2000.

ADDRESSES: Federal Communications Commission, 445 12th Street, SW, Room TW–A325, Washington, DC 20554. In addition to filing comments with the FCC, interested parties should serve the petitioners, or their counsel or consultant, as follows: David M. Stout, Managing Member, McCook Radio Group, LLC, 1811 West ''O'' Street, McCook, NE 69001 (Petitioner in RM–9841); James S. Bumpous, Partner, Butte Falls Radio, 13915 Lakeview Drive, Austin, TX 78732 (Petitioner in RM–9849); Clyde and Connie Lee Scott,d/b/a EME Communications, 293 JC Saunders Road, Moultrie, GA 31768 (Petitioner in RM–9855); Sangre de Christo Broadcasting Co., Inc., c/o Ernest T. Sanchez, 2000 L Street, NW, Suite 200, Washington, DC 20036 (Counsel to petitioner in RM–9868); Robin B. Thomas, President, New West Broadcasting, 1001 Weatherby Drive, Cheyenne, WY 82007 (Petitioner in RM–9869); Muddy Broadcasting Company, c/o Dawn M. Sciarrino, Clifford M. Harrington and Paul A. Cicelski, Shaw Pittman, 2300 N Street, NW, Washington, DC 20037 (Counsel to petitioner in RM–9870); Sutton Radiocasting Corporation, c/o John F. Garziglia, Patricia M. Chuh, Pepper & Corazzini, LLP, 1776 K Street, NW, Suite 200, Washington, DC 20006–2334 (Counsel to petitioner in RM–9871); C. Michael Adkins, SSR Communications Incorporated, 5116 Wesleyan Circle, Macon, GA 31210 (Petitioner in RM–9872).

FOR FURTHER INFORMATION CONTACT: Leslie K. Shapiro, Mass Media Bureau, (202) 418–2180.

SUPPLEMENTARY INFORMATION: This is a synopsis of the Commission's Notice of Proposed Rule Making, MM Docket Nos. 00–82, 00–83, 00–84, 00–85, 00–86, 00–87, 00–88, and 00–89, adopted May 10, 2000, and released May 19, 2000. The full text of this Commission decision is available for inspection and copying during normal business hours in the FCC Reference Center, 445 12th Street, SW, Washington, DC. The complete text of this decision may also be purchased from the Commission's copy contractor, International Transcription Services, Inc., (202) 857–3800, 1231 20th Street, NW, Washington, DC 20036.

Channel 280C2 can be allotted to McCook, NE, without the imposition of a site restriction, at coordinates 40–12–18 NL; 100–37–36 WL. Channel 255A can be allotted to Butte Falls, OR, with a site restriction of 1.9 kilometers (1.2 miles) northwest, at coordinates 42–33–05 NL; 122–35–18 WL, to avoid a short-spacing to Station KAGO-FM, Channel 258C1, Klamath Falls, OR. Channel 272A can be allotted to Jacksonville, GA, with a site restriction of 13.5 kilometers (8.4 miles) northwest, at coordinates 31–51–54 NL; 83–06–16 WL, to avoid a short-spacing to Stations WZAT, Channel 271C, Savannah, GA, WBGA, Channel 273C1, Waycross, GA, and WYSC, Channel 274A, McRae, GA. Channel 224A can be assigned to Las Vegas, NM, without the imposition of a site restriction, at coordinates 35–36–00 NL; 105–13–00 WL. Channel 288C can be allotted to Vale, OR, with a site restriction of 9.6 kilometers (6.0 miles) west, at coordinates 44–00–06 NL; 117–21–32 WL, to avoid a short-spacing to Stations KJOT, Channel 286C, Boise, ID, and KCIX, Channel 290C, Garden City, ID. Channel 251C3 can be allotted to Brightwood, OR, with a site restriction of 20.6 kilometers (12.8 miles) southeast, at coordinates 45–17–20 NL; 121–47–04 WL, to avoid a short-spacing to Station KUPL–FM, Channel 254C1, Portland, OR. Channel 237A can be allotted to Dillsboro, NC, with a site restriction of 10.7 kilometers (6.6 miles) southeast, at coordinates 35–18–21 NL; 83-09–50 WL, to avoid a short-spacing to Stations WIKQ, Channel 235C, Greeneville, TN, and WYFC, Channel 237A, Clinton, TN. Channel 225A can be allotted to Waynesboro, GA, with a site restriction of 2.0 kilometers (1.3 miles) northeast, at coordinates 33–06–23 NL; 82–00–14 WL, to avoid a short-spacing to Stations WKKZ, Channel 224C2, Dublin, GA, and WEAS-FM, Channel 226C1, Savannah, GA.

Provisions of the Regulatory Flexibility Act of 1980 do not apply to this proceeding.

Members of the public should note that from the time a Notice of Proposed Rule Making is issued until the matter is no longer subject to Commission consideration or court review, all *ex parte* contacts are prohibited in Commission proceedings, such as this one, which involve channel allotments. See 47 CFR 1.1204(b) for rules governing permissible *ex parte* contacts.

For information regarding proper filing procedures for comments, see 47 CFR 1.415 and 1.420.

Federal Communications Commission.

John A. Karousos,

Chief, Allocations Branch, Policy and Rules Division, Mass Media Bureau.

[FR Doc. 00–13598 Filed 5–31–00; 8:45 am]

BILLING CODE 6712–01–P

FEDERAL COMMUNICATIONS COMMISSION

47 CFR Part 73

[DA No. 00–1110; MM Docket No. 00–28; RM–9796]

Radio Broadcasting Services; Christine, TX

AGENCY: Federal Communications Commission.

ACTION: Proposed rule; dismissal.

SUMMARY: This document dismisses a proposal filed by Christine Radio Broadcasting Company requesting the allotment of Channel 245A at Christine, Texas, as the community's first local service. *See* 65 FR 11537, March 3, 2000. As stated in the *Notice,* a showing of continuing interest is required before a channel will be allotted. Since there has been no interest expressed for the allotment of a channel at Christine, the *Report and Order* dismisses the proposal.

FOR FURTHER INFORMATION CONTACT: Kathleen Scheuerle, Mass Media Bureau, (202) 418–2180.

SUPPLEMENTARY INFORMATION: This is a summary of the Commission's Report and Order, MM Docket No. 00–28, adopted May 10, 2000, and released May 19, 2000. The full text of this Commission decision is available for inspection and copying during normal business hours in the Commission's Reference Center, 445 12th Street, SW, Washington, DC. The complete text of this decision may also be purchased from the Commission's copy contractors, International Transcription Services, Inc., 1231 20th Street, NW, Washington, DC 20036, (202) 857–3800, facsimile (202) 857–3805.

Federal Communications Commission.

John A. Karousos,

Chief, Allocations Branch, Policy and Rules Division, Mass Media Bureau.

[FR Doc. 00–13597 Filed 5–31–00; 8:45 am]

BILLING CODE 6712–01–P

FEDERAL COMMUNICATIONS COMMISSION

47 CFR Part 73

[DA 00–1109; MM Docket No. 99–115; RM–9378]

Radio Broadcasting Services; Clio and Tuscola, MI

AGENCY: Federal Communications Commission.

ACTION: Proposed rule; denial.

SUMMARY: The *Notice* in this proceeding proposed the reallotment of Channel 268A from Tuscola, Michigan, to Clio, Michigan, and modification of the license for Station WWBN accordingly. The *Notice* was issued in response to a petition filed by Faircom Flint Inc. See 64 FR 18569, 1999. Based on the information submitted, it has been determined that the reallotment from Tuscola to Clio does not provide a public interest benefit of enough significance to outweigh the loss of a transmission service to Tuscola or offset the disruption of an existing service. Therefore, the proposed reallotment from Tuscola to Clio has been denied. With this action, this docketed proceeding is terminated.

FOR FURTHER INFORMATION CONTACT: Kathleen Scheuerle, Mass Media Bureau, (202) 418–2180.

SUPPLEMENTARY INFORMATION: This is a summary of the Commission's Report and Order, MM Docket No. 99–115, adopted May 10, 2000, and released May 19, 2000. The full text of this Commission decision is available for inspection and copying during normal business hours in the Commission's Reference Center, 445 12th Street, SW, Washington, DC. The complete text of this decision may also be purchased from the Commission's copy contractors, International Transcription Services, Inc., 1231 20th Street, NW, Washington, DC 20036, (202) 857–3800, facsimile (202) 857–3805.

Federal Communications Commission.

John A. Karousos,

Chief, Allocations Branch, Policy and Rules Division, Mass Media Bureau.

[FR Doc. 00–13596 Filed 5–31–00; 8:45 am]

BILLING CODE 6712–01–P

DEPARTMENT OF TRANSPORTATION

National Highway Traffic Safety Administration

49 CFR Part 575

[Docket No. NHTSA–2000–6859]

RIN 2127–AC64

Consumer Information Regulations; Federal Motor Vehicle Safety Standards; Rollover Prevention

AGENCY: National Highway Traffic Safety Administration (NHTSA), DOT.

ACTION: Request for comments.

SUMMARY: The agency believes that consumer information on the rollover risk of passenger cars and light multipurpose passenger vehicles and trucks would reduce the number of injuries and fatalities from rollover crashes. This information would enable prospective purchasers to make choices about new vehicles based on differences in rollover risk and serve as a market incentive to manufacturers in striving to design their vehicles with greater rollover resistance. The consumer information program would also inform drivers who choose vehicles with less rollover resistance that their risk of harm can be greatly reduced with seat belt use to avoid ejection.

The agency has tentatively decided that the Static Stability Factor should be used to indicate overall rollover risk in single-vehicle crashes. This document seeks comment on whether the information should be presented as part of NHTSA's New Car Assessment Program (NCAP), which provides consumer information concerning frontal and side impact protection.

DATES: Comment Date: Comments must be received by July 31, 2000.

ADDRESSES: All comments should refer to Docket No. NHTSA–2000–6859 and be submitted to: Docket Management, Room PL–401, 400 Seventh Street, SW, Washington, DC 20590. Docket hours are from 10 am to 5 pm Monday through Friday.

For public comments and other information related to previous notices on this subject, please refer to Docket No. 91–68; Notice 3, NHTSA Docket, Room 5111, 400 Seventh Street, SW, Washington, DC 20590. NHTSA Docket hours are from 9:30 am to 4 pm Monday through Friday.

FOR FURTHER INFORMATION CONTACT: Gayle Dalrymple, NPS–23, Office of Safety Performance Standards, National Highway Traffic Safety Administration, 400 Seventh Street, SW, Washington, DC 20590. Ms. Dalrymple can be

reached by phone at (202) 366–5559 or by facsimile at (202) 366–4329.

SUPPLEMENTARY INFORMATION:

I. Executive Summary
II. Background
III. Rulemaking History
IV. Recent Research on Maneuver-induced Rollover Crashes
A. Why Study Untripped Rollovers?
B. Estimate of the Annual National Incidence of On-Road, Untripped Rollover Crashes
C. Dynamic Test Program
1. Preliminary Steps
a. NASS Case Studies
b. ODI Complaints
c. Survey of Available Test Procedures
2. Track Testing—Phase Ia
3. Track Testing—Phase Ib
4. Track Testing—Phase II
a. Test Vehicle Selection
b. Results
5. Plans for Continuing Dynamic Test Research
D. How Do Dynamic Rollover Test Results Compare With Metrics?
V. Why Choose SSF?
A. Description of Metrics
B. Tripped and Untripped Rollover
C. Correlation and Causation
D. Simplicity and Measurability
E. Unintended Consequences
VI. Why Not a Standard?
VII. Consumer Information Presentation
A. How Consumers Want to See Information Displayed
B. Converting SSF Measurements to Star Ratings
VIII. Rollover Information Dissemination through NCAP
A. Why NCAP Rather than Vehicle Labeling?
B. Addition of Rollover Resistance Stars to NCAP
IX. Rulemaking Analyses and Notices
X. Submission of Comments
Appendix

I. Executive Summary

This notice requests comment from the public on NHTSA's intent to include a vehicle measure of rollover resistance, its Static Stability Factor, as an addition to the 2001 New Car Assessment Program (NCAP).

According to the 1997 Fatality Analysis Reporting System (FARS), 9,529 people were killed as occupants in light vehicle rollovers. FARS shows that 53 percent of light vehicle occupant fatalities in single-vehicle crashes involved rollover. The proportion differs greatly by vehicle type: 45 percent of car occupant fatalities in single-vehicle crashes involved rollover, compared to 60 percent for pickup trucks, 65 percent for vans, and 79 percent for sport utility vehicles (SUVs). The 1995–1997 National Automotive Sampling System (NASS) estimates that 228,000 light vehicles were towed from a rollover crash each year (on average), and that 25,000 occupants of these vehicles were seriously injured.

The action described by this notice follows a decision by the agency in 1994 (59 CFR 33254) to terminate rulemaking on a minimum standard for rollover resistance and to propose a consumer information approach instead. We have decided to pursue consumer information, through NCAP, to enable consumers to make informed choices about the tradeoffs in vehicle attributes, such as high ground clearance, and rollover resistance. NCAP provides practical advantages over the mandatory consumer information regulation proposed in 1994:

- Implementation would be faster. The program would be able to start almost immediately, so consumers would have the information sooner.
- NHTSA retains control of vehicle measurement so the consumer will know exactly which vehicle model/equipment combination was tested.
- It takes advantage of the existing NCAP organization within NHTSA equipped to perform vehicle tests and disseminate consumer information and avoids the need for a compliance function within NHTSA to collect and process manufacturers' test reports and provide to manufacturers the vehicle ranges required on the labels.

The agency believes that consumer information on the rollover risk of passenger cars and light multipurpose passenger vehicles and trucks, based on the vehicle's Static Stability Factor, would reduce the number of injuries and fatalities from rollover crashes. This information would enable prospective purchasers to make choices about new vehicles based on differences in rollover risk and serve as a market incentive to manufacturers in striving to design their vehicles with greater rollover resistance.

It would inform drivers of the general difference in rollover resistance between light trucks and cars and among vehicles within the various classes. Consumers who need, or desire, a particularly large cargo space, high ground clearance, or narrow track width, would not be denied the chance to purchase such vehicles. However, consumers who choose vehicles with relatively low rollover resistance could do so with knowledge of that fact, something that is not very likely today. The consumer information program would also inform drivers who choose vehicles with less rollover resistance that their risk of harm can be greatly reduced with seat belt use to avoid ejection.

In 1994, the agency proposed a vehicle labeling requirement for rollover information, but we believe that including rollover information in the NCAP program instead may be preferable. The labeling of vehicles with one safety attribute to the exclusion of others may be misleading. A 1996 study by the National Academy of Sciences (NAS) recommended the development of an overall measure of vehicle safety. Until that goal can be met, the presentation of our proposed measure of rollover risk, in the context of our established measures of frontal and side impact crashworthiness in NCAP, would go a long way toward addressing NAS's concern for presenting overall vehicle safety.

II. Background

Rollover crashes are complex events that reflect the interaction of driver, road, vehicle, and environmental factors. We can describe the relationship between these factors and the risk of rollover using information from the agency's crash data programs. We limit our discussion here to light vehicles, which are defined as the combination of (1) passenger cars and (2) multipurpose passenger vehicles and trucks under 4,536 kilograms (10,000 pounds) gross vehicle weight rating (collectively, ''light trucks'').[1]

According to the 1997 Fatality Analysis Reporting System (FARS), 9,529 people were killed as occupants in light vehicle rollovers, including 7,697 killed in single-vehicle rollovers. Eighty percent of the people who died in single-vehicle rollovers were not using a safety belt, and 63 percent were ejected from the vehicle (including 52 percent who were completely ejected). FARS shows that 53 percent of light vehicle occupant fatalities in single-vehicle crashes involved rollover. The proportion differs greatly by vehicle type: 45 percent of car occupant fatalities in single-vehicle crashes involved rollover, compared to 60 percent for pickup trucks, 65 percent for vans, and 79 percent for sport utility vehicles (SUVs).

The 1995–1997 National Automotive Sampling System (NASS) estimates that 228,000 light vehicles were towed from a rollover crash each year (on average), and that 25,000 occupants of these vehicles were seriously injured (defined as an Abbreviated Injury Scale rating of at least 3).[2] This includes 186,000 single-vehicle tow-away rollovers with 17,000 serious injuries. Seventy-six percent of those people who suffered a serious injury in single-vehicle tow-away rollovers were not using a safety

[1] Light trucks include vans, minivans, SUVs, and pickup trucks under 4,536 kilograms (10,000 pounds) GVWR.

[2] A broken hip is an example of an AIS 3 injury.

belt, and 56 percent were ejected (including 48 percent who were completely ejected). Estimates from NASS are that 82 percent of tow-away rollovers occurred in single-vehicle crashes, and 85 percent (159,000) of the single-vehicle rollover crashes occurred off the roadway.

The 1995–1997 General Estimates System (GES) data produce estimates that 240,000 light vehicles rolled over each year (on average) in police-reported crashes, and that 55,000 occupants in rollover crashes received injuries rated as K or *A* on the police injury scale. (The police KABCO scale calls these injuries ''incapacitating,'' but their actual severity depends on local practice. ''Incapacitating'' injury may mean that the injury was visible to the reporting officer or that the officer called for medical assistance.) This includes 207,000 single-vehicle rollovers with 45,000 K or A injuries. Fifty-two percent of those with *K* or *A* injury in single-vehicle rollovers were not using a safety belt, and 18 percent were ejected from the vehicle (including 16 percent who were completely ejected). Estimates from GES are that 16 percent of light vehicles in police-reported single-vehicle crashes rolled over. The estimated risk of rollover differs by vehicle type: 13 percent of cars and 14 percent of vans in police-reported single-vehicle crashes rolled over, compared to 24 percent of pickup trucks and 30 percent of SUVs.

III. Rulemaking History

In 1973 NHTSA issued an Advance Notice of Proposed Rulemaking (ANPRM) on resistance to rollover (38 FR 9598; April 18, 1973). The agency was considering a safety standard ''* * * that would specify minimum performance requirements for the resistance of vehicles to rollover in simulations of extreme driving conditions encountered in attempting to avoid accidents.'' Research projects were undertaken to investigate handling and stability of different types of vehicles in severe steering maneuvers associated with untripped rollovers. The relevant conclusions of the research were that ''vehicle rollover response is dominated by the vehicle's rigid body geometry (with dynamic contributions from suspension effects),'' and that ''untripped rollover, even on high skid-resistance surfaces, is difficult to predict and accomplish.'' The research recommended computer simulation of dynamic testing as a more repeatable alternative to full-scale track testing. Further work on untripped rollover was discontinued in the late 70's.

In September 1986, Congressman Timothy Wirth petitioned NHTSA to establish a safety standard for rollover resistance by setting a minimum allowable Static Stability Factor (SSF) of 1.2. The agency denied the petition in December of 1987 (52 FR 49033, December 29, 1987) stating that ''* * * while a vehicle's stability factor can reasonably predict whether a vehicle which is already involved in a single-vehicle accident will roll over, it does not accurately determine its likelihood of becoming involved in an accident that includes rollover.'' An SSF of 1.2 ''* * * would neither adequately encompass the causes of vehicle rollover nor satisfactorily ameliorate the problem.'' In order to consider a minimum standard, the agency believed it was necessary to understand vehicle characteristics making a single-vehicle crash more likely as well as those predictive of the rollover outcome of a single-vehicle crash.

In June 1988 the Consumers Union (CU) petitioned NHTSA to establish a safety standard to protect occupants against ''unreasonable risk of rollover.'' CU did not suggest a specific remedy. The agency granted the petition in September 1988. From 1988–1993 NHTSA undertook the most comprehensive vehicle and data analysis in its history, studying over 100,000 single-vehicle rollover crashes. This study eventually focused on two vehicle static measurements which seemed promising: Tilt Table Angle and Critical Sliding Velocity. Tilt Table Angle is the angle at which a vehicle will begin to tip off a gradually tilted platform. Critical Sliding Velocity is the minimum velocity needed to trip a vehicle which is sliding sideways. Both of these measurements address the situation in which a vehicle encounters something that trips it into a rollover, such as a curb, soft dirt, or its own tire rim digging into the pavement.

The NHTSA Authorization Act of 1991 (the Act) (part of the Intermodal Surface Transportation Efficiency Act) required the agency to address several vehicle safety subjects through rulemaking. One of the safety subjects was protection against unreasonable risk of rollovers of passenger cars and light trucks. The Act required that NHTSA publish, no later than May 31, 1992, an ANPRM or a notice of proposed rulemaking (NPRM) on this subject. The Act also required the agency to complete a rulemaking action on rollover within 26 months of publishing the ANPRM. The Act explained that this rulemaking would be considered completed when NHTSA either published a final rule or decided and announced that it would not promulgate a rule.

On January 3, 1992 NHTSA fulfilled the first mandate of the Act by publishing an ANPRM (57 FR 242). In the ANPRM the agency stated that it was considering various regulatory actions to reduce the frequency of vehicle rollovers and/or the number and severity of injuries resulting from vehicle rollovers. The agency requested comments on potential regulatory actions in the areas of: improved stability, improved crashworthiness, and consumer information. NHTSA said that it might issue a rule or rules in any one of these three categories, or in any combination of them.

The ANPRM discussed the agency's statistical analyses of the interaction of driver characteristics, vehicle stability metrics, roadway and environmental conditions. The notice described the following vehicle stability metrics as having a potentially significant role in vehicle rollover: center of gravity height; static stability factor; tilt table ratio; side pull ratio; wheelbase; critical sliding velocity; rollover prevention metric; braking stability metric; and percent of total vehicle weight on the rear axle. A vehicle stability metric is a measured vehicle parameter thought to be related to the vehicle's likelihood of rollover involvement. To supplement the ANPRM, a Technical Assessment Paper that discussed testing activities, testing results, crash data collection, and analysis of the data was placed in the docket on January 6, 1992 (NHTSA–1996–1683–4). A description of the individual metrics can be found in the Technical Assessment Paper.

During the development of the ANPRM and after receiving and analyzing comments to the ANPRM, it became obvious that no single type of rulemaking could solve all, or even a majority of, the problems associated with rollover. This view was strengthened by the agency's review and analysis of the comments on the ANPRM. To emphasize this conclusion and inform the public further about the complicated nature of the light duty vehicle rollover problem, the agency released a document titled ''Planning Document for Rollover Prevention and Injury Mitigation'' at a Society of Automotive Engineers (SAE) meeting on rollover on September 23, 1992. The Planning Document gave an overview of the rollover problem and a list of alternative actions that NHTSA was examining to address the problem. Activities described in that document were: crash avoidance research on vehicle measures for rollover resistance, research on antilock brake effectiveness,

rulemaking on upper interior padding to prevent head injury, research into improved roof crush resistance to prevent head and spinal injury, research on improved side window glazing and door latches to prevent occupant ejection, and consumer information to alert people to the severity of rollover crashes and the benefits of safety belt use in this type of crash. The document was placed in Docket No. 91–68; Notice 02, on the same day. NHTSA published a notice in the **Federal Register** announcing the availability of the Planning Document and requesting comment (September 29, 1992; 57 FR 44721).

In June 1994 NHTSA terminated rulemaking to establish a minimum standard, fulfilling the second mandate of the Act, because it found (using statistical simulation of crash outcome) that increasing several vehicle rollover metrics to a level higher than is currently seen in most compact sport utility vehicles would not appreciably decrease crash fatalities and injuries in rollovers (59 FR 33254). In the termination notice NHTSA said, ''The agency believes that no single type of rulemaking or other agency action could solve all, or even a majority of, the problems associated with rollover. Accordingly, it is pursuing a broad range of actions to address those problems.'' The notice discussed the wide range of ongoing agency activities to address the rollover problem and referred to the Planning Document.

In the same June 1994 notice NHTSA proposed to require manufacturers to label their vehicles with information on their rollover stability using either Tilt Table Angle (TTA) or Critical Sliding Velocity (CSV). However, in September 1994, in NHTSA's fiscal 1995 Appropriations Act, Congress stated that NHTSA shall not issue any final rule on vehicle rollover labeling until the agency had reviewed a study by the National Academy of Sciences (NAS) on how to most effectively communicate motor vehicle safety information to consumers. The NAS study, ''Shopping for Safety—Providing Consumer Automotive Safety Information,'' was released in March 1996 (TRB Special Report 248). The NAS study recommended that NHTSA expand the scope of consumer information it provides to the public. In the long term, the study recommends the development of one overall measure that combines the relative importance of crashworthiness and crash avoidance features for a vehicle.

In May 1996 NHTSA issued the ''Status Report for Rollover Prevention and Injury Mitigation'' (NHTSA–1996–1811–2). This document updated the progress of the programs discussed in the Planning Document and added the description of a planned project: development of a dynamic test for rollover and control stability in light vehicles.

On June 5, 1996, NHTSA reopened the comment period on its proposed labeling rule (61 FR 28560). In that notice NHTSA noted that it was reviewing the 1994 proposal in light of the NAS study. On the same day NHTSA published a notice denying a July 1994 petition for reconsideration of the termination of rulemaking on a rollover standard from the Advocates for Highway and Auto Safety and the Insurance Institute for Highway Safety. In the denial the agency noted that it had reviewed and expanded its work on the benefits and cost of a standard based on static vehicle measurements and found the same results: such a standard would eliminate a very popular vehicle type (compact sport utility vehicles) and would not decrease appreciably injuries and fatalities in rollover crashes.

In August 1996 NHTSA received a petition from Consumers Union (CU) asking the agency to develop a test of vehicle emergency handling capability and to provide test results on new vehicles to the public as consumer information. The type of rollover that would be addressed by such a test is known as on-road, untripped rollover, or maneuver-induced rollover. This type of rollover was believed to represent approximately 10 percent of annual rollovers. Since the May 1996 Status Report, the agency had been planning to start a program on dynamic stability testing. Funding for this research was received for fiscal year 1997, and therefore the agency granted the CU petition in May 1997 saying, ''NHTSA will initially focus on exploring whether it can develop a practicable, repeatable and appropriate dynamic emergency handling test that assesses, among other issues, a vehicle's propensity for involvement in an on-road, untripped rollover crash.'' Section IV of this notice details the additional research which has been done since the 1996 CU petition.

Since the vast majority of rollovers are tripped, we have now decided that primary consumer information should be based on factors relevant to tripped as well as untripped rollover, and we have reconsidered the merits of Static Stability Factor as an indicator of rollover risk for consumer information.

IV. Recent Research on Maneuver-Induced Rollover Crashes

A. Why Study Untripped Rollovers?

The causes of *tripped* rollover are well understood. Any vehicle will roll over if it impacts a tripping mechanism with sufficient lateral velocity (such as when the wheels on one side of a vehicle that is sliding sideways hit a curb and the vehicle tips over). A vehicle's static and dynamic rollover metrics are related to the theoretical minimum lateral velocity required for a tripped rollover to occur. Improving a vehicle's static and dynamic rollover metrics increases that theoretical minimum lateral velocity and decreases the potential for rollover.[3] Unfortunately, as we reported in 1994, there is currently no vehicle measurement that can be used in a minimum vehicle safety standard that would decrease the risk of rollover involvement without necessitating drastic design changes to a vehicle type that is sought after by consumers, namely compact SUVs. This is because the rollover rate of an individual make/model is not very sensitive to small changes in metrics, and larger changes in metrics great enough to positively influence rollover rate would necessitate vehicle dimensional changes that would prevent the manufacture of current designs of compact light truck (pickups and SUVs)[4].

In comparison, the causes of *untripped,* on-road rollover are not well understood. Past agency research has never found a light vehicle for which, when empty, the sharpest attainable steady state (constant radius) turn exceeds the vehicle's rollover threshold (although, in our recent track testing, a compact pickup did tip up in a step-steer test). However, our crash data show that light vehicles *do* roll over on the roadway, without tripping, due to abrupt maneuvers. Currently-undefined transient maneuvers may exist that cause rollover for at least some light vehicles. Various crash data studies

[3] Tripped rollovers result from a vehicle's sideways motion, as opposed to its forward motion. When sideways motion is suddenly interrupted, for example, when a vehicle is sliding sideways and its tires on one side encounter something that stops them from sliding, the vehicle may roll over. Whether or not the vehicle rolls over in that situation depends on its speed in a sideways direction (lateral velocity). By measuring certain vehicle dimensions, it is possible to calculate each make/model's theoretical minimum lateral velocity for this type of rollover to occur. These calcualted speeds are relatively low, usually below 15mph, but would be higher in actual crashes.

[4] ''Potential Reductions in Fatalities and Injuries in Single-vehicle Rollover Crashes as a Result of a Minimum Rollover Stability Standard;'' NHTSA; 1994.

have indicated that loss of vehicle directional control is a prelude to rollover in 50 to 80 percent of all rollover crashes [5]. These traits would be particularly important in on-road, untripped rollovers and rollovers resulting from loss of control due to a poor road edge recovery maneuver.

An agency test project done in the mid-1970's on light truck handling reported several interesting findings on braking in a turn, trapezoidal steer, sinusoidal steer, trapezoidal steer while braking, and crosswind sensitivity for light trucks (including utility vehicles) [6]. This study concentrated on discovering the handling properties of ''recreational vehicles'' in use at the time. The goal was not necessarily to discover maneuvers that would lead to rollover for particular vehicles. It was intended instead to ''demonstrate the handling behavior of recreational vehicles when an external disturbance is encountered or while engaged in a variety of evasive actions * * * '' Maneuvers were not chosen for their relevance to crash data. No crash data study was done to determine what maneuvers and situations were common to most rollover crashes.

We decided that in order to cover all possible avenues, for even a small portion of the rollover problem, we should take a new look at untripped rollovers. Our goal was two-fold: To determine the extent of the national incidence of untripped rollover, and to examine commonly used track tests for their potential in acting as an indicator of vehicle tendency to roll over as the result of an on-road maneuver. Admittedly, this type of crash is a small percentage of all rollovers. However, we judged this new research to be worthwhile because this type of crash is very important to consumers (based on comments to the NPRM, at the 1994 town meetings, telephone calls to agency staff, and media interest). It represents the most egregious type of crash, where vehicle performance could be said to be most involved, and it could be the type of crash most affected by a crash avoidance standard if an effective maneuver could be developed.

Our goal was to find a test procedure that would be relevant to what actually happens to today's vehicles on the road. The best way to develop such a procedure was to investigate which situations and driving maneuvers are most common in untripped rollover crashes. Once these maneuvers and situations were identified, field testing could reveal which maneuvers can be performed reliably and repeatably.

B. Estimate of the Annual National Incidence of On-Road, Untripped Rollover Crashes

One important element in determining whether a new Federal Motor Vehicle Safety Standard (FMVSS) for untripped rollover prevention should be established is to determine how often that type of crash actually occurs. Even if it does not occur very often, if we were to develop a standard that would prevent a great majority of these crashes, a benefit would still accrue to the motoring public. We have known for many years that the incidence of untripped, on-road rollover is less than 10 percent of all rollovers. However, exactly how much less was not known and had not been investigated.

The National Automotive Sampling System Crashworthiness Data System (NASS CDS) is a sample of all crashes in the United States that involve damage to a passenger vehicle (car, light truck or van) of sufficient severity to require towing. NASS CDS contains variables describing the type of rollover for vehicles involved in rollover crashes. NHTSA's National Center for Statistics and Analysis recently completed an estimate of the national incidence of untripped rollover using 1992–96 NASS data and a review of rollover crashes completed by NHTSA in 1998. [7] NCSA found that over those years an average of 7,866 untripped rollovers happen each year (standard error 2,340), 4.4 percent of all rollover crashes.

C. Dynamic Test Program

Our interest in untripped rollover, combined with public interest in vehicle stability arising in part from Consumers Union double-lane change tests, [8] led us to undertake a new rollover test program. It was apparent that, since the 1992 ANPRM, the light truck market had expanded and was continuing to grow.

Thus, in late 1996, we started planning a test program in which the goal was to evaluate the best available dynamic rollover resistance test procedures which could be used either in a new vehicle safety standard or in a consumer information program to reduce light vehicle rollover risk. The test program we envisioned would be a full scale evaluation using production vehicles with an emphasis on dynamic track testing as opposed to static laboratory measurements, the latter having been well researched and documented already by that time.

1. Preliminary Steps

As a first step, we identified the candidate procedures for the purpose of measuring light vehicle rollover resistance from among many available possibilities, with consideration given to current ''best practices'' and to actual rollover crash experience. We took the following steps before conducting the full scale test program:

a. Review of a selection of NASS CDS cases in which untripped rollover was the primary harmful event. The review gave a general idea of the circumstances surrounding on-road, untripped rollover crashes and provided some perspective on the types of track testing that would be appropriate to reflect actual crashes of that kind.

b. Review of consumer complaints involving rollovers of light vehicles. The complaints came from an agency database maintained by NHTSA's Office of Defects Investigation (ODI).

c. Comprehensive review of a variety of test procedures from several available sources.

Each of these activities is briefly discussed below.

a. NASS Case Studies

The NASS CDS database for the calendar years 1992 to 1995 included 15 light vehicle rollover crashes which met all of the following criteria:

- the crash was coded ''turnover'', which indicates an untripped rollover, [9]
- a single vehicle was involved and turned over on the road or paved shoulder,
- the rollover was the first harmful event,
- the vehicle was a 1990 or later model year,
- the driver was not impaired, there were no mechanical failures such as a tire blow-out prior to the rollover, and

[5] ''Report to Congress: Rollover Prevention and Roof Crush;'' NHTSA, 1992.

[6] ''Handling Test Procedures for Light Trucks, Vans, and Recreational Vehicles;'' NHTSA, DOT–HS–4–00853; February 1976.

[7] Research Note, ''Passenger Vehicles in Untripped Rollovers;'' NHTSA National Center for Statistics and Analysis; September 1999.

[8] Consumers Union of Yonkers, New York, publishes vehicle evaluations in their Consumer Reports magazine. Part of their evaluation is to have experienced test drivers run each test vehicle through an obstacle avoidance course marked out with traffic cones. The test attempts to simulate an emergency in which a driver, initially traveling straight in a traffic lane, is suddenly forced to swerve to the left into the adjacent lane by an obstacle encroaching into his path from the right, and then swerve back into the original lane. Thus the term ''double-lane change.''

[9] This review of NASS CDS rollover cases was made prior to the 1998 audit of NASS rollover coding. The audit found that many ''turnover'' cases should have been coded as other types, primarily ''trip over''. A discussion of the NASS CDS audit is included in the Research Note cited in this notice.

• the rolled vehicle was not towing a trailer.

These restrictions limited the cases to a selection which could be described as ''maneuver-induced'' rollovers, that is, rollover crashes in which tire-road friction, rather than some other factor such as a collision or contact with a tripping mechanism, can be assumed to have been the primary source of overturning force.

We reviewed hard copy files from each of those 15 cases. The following are the pertinent observations from that review:

• Thirteen of the cases involved LTVs (vans, pickups, or SUVs); the other two rollovers involved sub-compact cars in a loaded condition (three or more occupants).

• In ten of the 15 cases, the vehicle was entering, exiting, or traveling on highways, divided roadways, or interstates with posted speeds of 55 mph or greater and associated entrance/exit ramps prior to crashing. According to the files, two cases involved excessive speed prior to the incident. The remaining five cases occurred in lower speed zones (posted 35 mph or less).

• Only one of the 15 rollovers occurred in an urban setting; the remainder occurred in a rural setting or other non-urban location.

• None of the 15 cases appeared to involve a driver attempting to avoid a stationary or slow-moving object in the roadway. In several cases, the driver swerved or lost control of the vehicle, but the reason for swerving was reported as a moving vehicle, or unknown.

• It appears that driving conditions were generally good in all of the cases (level roads, no precipitation, in daylight or on lighted roadways) except for wet pavement in a few of the instances.

These observations indicated that single-vehicle, untripped rollover crashes most often occur on rural highways; the speeds at which the rollover crashes occur are relatively high compared to, for example, those experienced in the Consumers Union obstacle avoidance maneuver (approximately 30 to 40 mph, depending on the vehicle); and they occur because drivers lose control of their vehicles, sometimes in attempting to recover from having completely or partially left the roadway, as opposed to avoiding an obstacle.

The information derived from these case studies led us to conclude that, in order to evaluate untripped rollover stability of production vehicles, at least one of the test procedures should involve a highway scenario with the test vehicle moving at close to highway speeds (45 mph or greater) and attempting to re-enter the roadway from a shoulder or from some partially off-road disposition.

In reviewing available test procedures, we found mention of a test procedure proposed at one time by General Motors that emulates a roadway recovery scenario. In addition, at a meeting with NHTSA representatives in March, 1997, Suzuki submitted information on three variations of a scenario in which a vehicle leaves or partially leaves a roadway and then rolls over after attempting to re-enter the roadway. One of the three scenarios suggested by Suzuki is similar to the roadway recovery scenario indicated in several of the NASS cases.

An expanded search of NASS CDS data with fewer restrictions than those listed above for the 15 NASS CDS cases yielded 60 untripped rollover cases. In many of those cases, the cause of rollover was coded as ''obstacle avoidance.'' This supported inclusion of an obstacle avoidance test procedure in addition to the roadway recovery test in the NHTSA test program.

b. ODI Complaints

We reviewed a number of complaints of light vehicle rollover in the database maintained by ODI. As of March, 1997, 144 incidences of rollover involving passenger cars, light trucks, SUVs, and vans were found in the database (four other rollover complaints were rejected because they involved other types of vehicles like motor homes and heavy trucks).

Of the 144 complaints, roughly two-thirds were the result of an alleged component failure of some kind. In other words, the rollovers occurred, either directly or indirectly, because a critical component of the vehicle suddenly or unexpectedly broke (*e.g.,* ''axle separated''), seized (*e.g.,* ''brakes locked''), or otherwise failed (*e.g.,* ''steering wobbled'') while the vehicle was in motion. The following are some examples of typical complaint descriptions taken verbatim from the ODI files:

• ''Axle ring broke, causing vehicle to swerve/lose control/rollover,''

• ''Wheel assembly locked up, causing uncontrollable spin/rollover,''

• ''ABS brake locked up after reducing speed to 35 mph, vehicle slid then rolled over.''

• ''Inner tie rod broke at threads near outer tie rod. Vehicle swerved and rolled over.''

The most commonly reported component failures in the rollover complaints were:

• brake lock-up (both conventional and ABS systems),

• other braking system failure (including parking brake),

• steering or suspension component lock-up, separation, or other failure,

• wheel rim, axle, or bearing, separation or failure,

• tire went flat or other tire failure, and

• sudden acceleration

(Note that these failures were allegedly associated with the rollovers as reported in the complaint records, and there was no way to confirm them independently.)

In twenty-four of the complaints, no component failure was cited, and severe vehicle maneuvers were indicated. In these instances, the lack of vehicle rollover resistance appeared to be a primary causal factor, if not the ultimate cause. But this assumption is based solely on the minimal event description given in the ODI database. The following are some examples of the descriptions in which vehicle instability appeared to be a key factor:

• ''Truck rolled over when making clockwise wide arc turn, came to rest on its top.''

• ''While driving at 55 mph, went around an animal on highway, vehicle went out of control, rear fish-tailed, vehicle rolled; injured head, back, shoulder, and arm.''

• ''Lack of reinforcement around sunroof; high center of gravity resulted in rollover.''

There was insufficient information in the database in the remainder of the ODI complaints to allow speculation on the cause of the rollover.

Sixty-four percent of the ODI complaints (92 of 144) involved light trucks, vans, and sport utility vehicles as compared with passenger cars.

c. Survey of Available Test Procedures

We reviewed information on a wide range of test procedures related to vehicle handling and stability, including test methods already in use by vehicle manufacturers, technical standards organizations like SAE and the International Standards Organization, and consumer groups.

We also met with a number of major vehicle manufacturers to discuss their approach to vehicle design and testing with respect to rollover.[10] Each of the manufacturers had a somewhat different approach. In terms of track testing vehicles, manufacturers generally used a

[10] The meetings are documented in docket NHTSA–1998–3206.

battery of maneuvers to assess both handling and stability; no single test was dedicated solely to rollover resistance. Evaluations of rollover resistance were usually associated with more general handling evaluation tests.

One notable exception was a detailed engineering procedure for a ''fishhook'' test devised specifically for rollover propensity testing and submitted to the agency by Toyota Motor Corporation. Some tests were specifically mentioned by other vehicle manufacturers. These included step-steer (J-Turn), steering reversal, slalom, double lane change, and a resonant steering test. Two variations of the ''fishhook'' and two variations of a J-turn test were eventually used in the agency's untripped rollover test program (see sections 2 through 4, below).

Of particular importance among the vehicle manufacturers was their reliance to a very great extent on their own experienced test drivers to provide feedback on vehicle stability. It was evident that, in the realm of a manufacturer's vehicle development and testing programs, there was little incentive to use the most objective procedures possible, such as using a programmable steering controller. For the manufacturers' own purposes in designing the handling and stability characteristics of their vehicles, the skill and experience of test drivers was sufficient.

In NHTSA's review of dynamic rollover resistance test procedures, the initial objective had been to choose an available procedure which could be used, with minimal adaptation, in a test program with a large group of vehicle models. However, after review of available procedures, we concluded that there did not appear to be a single, prominent test among industry users, or one or two test procedures that were clearly superior in most respects for the purpose of rollover resistance testing. We were unable to conclude from the documentation that we reviewed whether any of the test procedures alone would provide an acceptable, practical, and repeatable measure of rollover stability, and one that would be accurate enough to effectively distinguish among many vehicle models of the same vehicle type. Furthermore, there were many procedures that were merely variations of some of the more basic ones. For example, we found reference to at least a half dozen variations on an obstacle avoidance test and each one was essentially a double-lane change.

Since there was insufficient information available on which to make a definitive test procedure selection, we decided to pursue a two phase test program. The first phase would focus on evaluating the various types of test procedures found in our initial review. This evaluation would allow us to eliminate any impractical, repetitive, or inapplicable test procedures. The second phase would then focus on an in-depth analysis of the relatively few test procedures remaining.

2. Track Testing—Phase Ia

For Phase I testing, we selected three popular SUVs in order to experiment with a number of possible test procedures. By using only a few vehicle models in Phase I, we were able to focus on narrowing down the extensive list of possible test procedures to a relatively few choices.

The three Phase I test vehicles were selected based on our desire to gain experience with SUVs in particular, as opposed to passenger cars, vans, or pickups. Also, it was necessary to choose vehicles from the same class to address the original goal of the test program, which was to determine whether dynamic test procedures could differentiate performance among vehicles of the same type. Once it had been decided to concentrate on SUVs in Phase I, the choice of models was made in large part on what we had in hand at the time or could obtain quickly and at low cost. The three models selected were: A 1997 Jeep Cherokee 4-door, four-wheel drive, a 1990 Toyota 4Runner 4-door, four-wheel-drive, and a 1984 Ford Bronco II, 2-door, four-wheel-drive. The suspension of each of these vehicles was mechanically refurbished as necessary prior to testing.

The test procedures that we evaluated in Phase I track testing included the following:

- Step-steer (''J-Turn'')
- J-Turn with pulse braking
- Toyota Fishhook maneuver (with pulse braking)
- Modified Toyota Fishhook maneuver (no pulse braking)
- Steering reversal
- Double lane change (path-following)
- Split-mu (wet epoxy and asphalt)
- Braking in a turn (''Brake and Steer'')

Some of these procedures, such as J-Turn, are generic and can be performed using a range of input parameters including various steering amplitudes and speeds. Although we began Phase I with specific variations of these test procedures in mind, each having predetermined test parameters, we did not limit our evaluation to any predetermined parameters. Instead, the specific test procedure parameters were used as starting points. As we gained experience during the course of Phase I, we made judgements about what were appropriate modifications to suit our testing objectives. For example, the Double Lane Change test was initially modeled after the Consumer's Union Short Course, using the same dimensions and cone spacing, but we experimented with a variety of course layouts by adjusting the cone spacing to give a different steering inputs. In another example, we used a modification of the Toyota Fishhook maneuver to represent a loss of control associated with driving errors in road edge recovery.

The result of Phase I testing was the selection of five procedures for further evaluation in Phase II. The selected maneuvers included two variations of the ''Fishhook'' steering-reversal test, two variations of the J-Turn (one with and one without a pulse brake application), plus a Resonant Steering procedure.

Perhaps the most significant outcome of Phase I testing was our decision to eliminate ''path-following'' maneuvers, including double-lane changes, from further consideration. Our experience in Phase I with path-following maneuvers indicated that they are too subjective. The reason for this was that steering inputs could vary widely over any course demarcated with cones or barriers. When speeds were high enough to push the vehicle to a limit condition, the steering inputs could not be repeated from one run to another. This result was significant because path-following tests, particularly double-lane change (obstacle avoidance) tests such as the so-called ''moose'' test were popular with consumer groups and had received fairly extensive public attention.

Our NASS CDS case studies had indicated that road-edge recovery was a possible factor in five of the 15 rollover crashes reviewed in subsection 1(a) above. The circumstances of these crashes were complex, usually involving a vehicle leaving the paved travel lanes, at least partially, so that two or more of its wheels were on the shoulder. Typically, the rollovers in these cases occurred after the vehicle's driver attempted to steer back onto the paved lanes. Since this scenario is difficult to recreate on a test track, we attempted to simulate it by driving test vehicles on a ''split mu'' surface, that is, with the wheels on one side of the vehicle on dry asphalt and the wheels on the opposite side on a slick surface. In this procedure, the wheels on the slick surface contributed little to the turning force as the vehicle was sharply steered towards the dry side of the test

track lane. The intent was to simulate the lack of traction that exists when two wheels are off the road, tending to resist the driver's effort to steer back onto the paved surface. Unfortunately, this procedure was of limited usefulness. The results were inconsistent from run to run, the lack of traction on one side causing erratic trajectories and leading to spin-outs in some cases. Overall, it was an ineffective simulation of the intended scenario.

A fundamental criticism of any dynamic, path-following maneuver having one or more steering reversals is that it could arbitrarily excite a ''roll resonance'' in some vehicles. That is, the timing of the steering reversal, which would be determined by the geometry of the course layout, had the potential to become synchronized with the vehicle's natural roll response so as to increase the roll motion. The test would be much more severe for any vehicles at roll resonance than for vehicles not at resonance. However, the test results might differ significantly merely by changing the course geometry, so that a different vehicle might have its roll resonance excited.

To address this resonance potential, it was necessary to either identify the conditions for resonance and demonstrate its effect on vehicle stability by intentionally inducing those conditions in a test maneuver, or else show that resonance is not a significant factor in rollover because of suspension damping or for some other reason that mitigates the theoretical effect.

The roll resonance issue led us to choose, as one of the candidate maneuvers for Phase IIa ''resonant steering'' test procedure. In that procedure, the first step was to attempt to determine each test vehicle's roll resonance frequency, and then to drive the test vehicle while oscillating the steering at the resonant frequency and increasing either the velocity or steer magnitude until the vehicle became unstable.[11] Ultimately, as discussed in the Phase II report, the test vehicles appeared to be well-damped and it was not possible to identify a distinct roll resonant frequency. This is an area where we would like to conduct further research and testing.

3. Track Testing—Phase Ib

After gaining some experience with dynamic maneuvers in the early part of Phase I, we decided that some issues that had come up during track testing warranted further exploration.[12] These issues included:

- the effect of tire wear in successive, severe test runs,
- repeatability of steering inputs from one driver to another, and
- the effect of outriggers on vehicle dynamics.

A key development during Phase Ib was the opportunity to experiment with a Programmable Steering Machine (PSM). This device could be mounted in any of the test vehicles and had the capability of inputting high steering rates and amplitudes. This device proved to be a valuable tool for dynamic testing and, to a great extent, addressed the driver variability issue.

Even with the PSM, the driver was still in the vehicle for braking and acceleration. Therefore, outriggers were still necessary. Testing found that outriggers added only slightly to the vehicle's moment of inertia.

Testing in Phase Ib found that tire shoulder wear was significant and caused lateral acceleration to increase with repeated test runs on the same tires. This problem was addressed by implementing a schedule of tire replacement based on the number of test runs.

Another important consideration in Phase I testing was that two-wheel-lift (TWL) could be difficult to recognize by visual observation of test runs. Some instances of TWL could be so small that they might not be apparent to test observers. We considered various methods for positively determining whether TWL occurred, as well as methods for measuring the degree or height of TWL. Ultimately, this issue was not resolved prior to commencement of Phase II. In Phase II, TWL was identified and measured either by direct visual observation of tests or by close examination of videotape records of them.

4. Track Testing—Phase II

a. Test Vehicle Selection

As a first step in conducting the Phase II test program, test vehicle make/models were selected to represent as many light vehicle types as possible of those currently in use on U.S. roads. First, light vehicles were categorized into four types: passenger cars, vans (and mini-vans), pickups, and SUVs. We decided that three vehicles in each category was the minimum sufficient number needed to represent each type and should consist of one compact, one mid-size and one large example from each type, making a total of twelve test vehicles. Additional criteria for selection were the following:

- Only late model vehicles (MY1997–98) to ensure that new vehicles could be procured for testing, and
- Only popular (high-selling) vehicles which had been in production without significant design changes for at least three years to ensure that they were represented in available crash data.[13]

b. Results

The Phase II results are reported in detail in the Phase II Final Report. In general, the results confirmed that light trucks have a lower resistance to tip up as a consequence of sharp steering inputs (high magnitude and rate) than passenger cars. Among the light trucks tested in Phase II, those with more truck-like characteristics (four-wheel drive, higher center of gravity) had a higher tendency to tip up than those with more car-like characteristics (two-wheel drive, lower center-of-gravity).

Furthermore, the dynamic tests results were consistent to a great extent with static measures of rollover resistance. Thus, the dynamic tests confirmed the significance of static metrics as predictors of untripped rollover propensity. This result is significant because, previously, the relationship of static metrics to tripped rollover was well-established, but the same has not necessarily been true of untripped rollover. Certainly, center-of-gravity height and track width do influence untripped rollover.

It is important to mention the influence of test driver safety on the Phase II test program. Even though outriggers were used consistently, the high speeds and abrupt direction changes required in the dynamic tests made it necessary to curtail some test sequences at a point where the test vehicle was starting to become unstable. That is, when a vehicle showed a tendency to begin to lift wheels at a certain speed, repeated runs at that speed may or may not have been attempted depending on safety considerations. Also, whereas runs at even higher speeds might have indicated whether major TWL would occur, higher speed runs were not attempted after the initial indications of tip-up were reached. The question of

[11] ''Unstable'' means two wheels on the same side of the vehicle lift completely off the roadway, to any height for any amount of time.

[12] Since these issues were researched separately, this phase of the test program was designated as ''Phase Ib'' to distinguish it from the earlier part of Phase I which focused on evaluation of the maneuvers. The earlier part of Phase I has since been referred to as ''Phase Ia.'' Eventually, it is our intention to make separate reports available coverting Phases Ia and Ib.

[13] The final selection of twelve make/models is documented in the Phase II final report which can be found in the DOT docket management system under number NHTSA–1998–3206.

whether minor TWL would become major TWL at higher speeds could not be answered due to the concern for test driver safety.

Based on the results of Phase II testing, we concluded from this research that dynamic test methods are not currently superior to simpler, less costly methods, particularly static metrics. The dynamic test results did not conflict with predictions from static metrics. Further, dynamic tests did not provide greater capability to indicate the rollover resistance, either untripped or tripped, of light vehicles. Therefore, we do not believe that dynamic test procedures are developed to the point necessary to be used for a minimum standard or consumer information at this time.

One of the rather surprising results of our track testing was that three vehicles experienced a similar tire problem, ''de-beading'', which resulted in minor or moderate TWL for two of the vehicles. De-beading occurs when the tire loses all of its air due to a separation of the tire bead from its wheel rim. This condition occurred in one SUV, one pickup, and one car. TWL resulted for the two light trucks. All tires were OEM and inflated as prescribed by the vehicles' manufacturers. Why does this de-beading concern us? When the tire separates from the wheel rim, the exposed rim can contact the surface over which the vehicle is sliding. The rim can then dig into the surface and act as a tripping mechanism to initiate a rollover crash. While these crashes are not untripped, they can be on-road and maneuver-induced.

After this unexpected result on the test track, we were interested to know whether this type of rollover initiation is happening in the real world. The NASS CDS data base does not have a specific variable for rollover initiation by tripping on the wheel rim, so a combination of NASS variables was used to estimate the nationwide incidence of this problem. NASS cases were tabulated for single-vehicle rollovers coded ''trip-over'' in which the pre-impact stability state was ''skidding laterally'' (either clockwise or counterclockwise), the ''rollover object contacted'' was ''ground'', the tripping location on the vehicle was ''wheels/tires'', and the rollover initiation occurred on the roadway or a paved shoulder. Using NASS years 1992 thru 1997, we estimate this combination of conditions occurs in an annual average of 11,896 crashes. This preliminary analysis was the best way to estimate the incidence of rollover crashes involving tire de-beading. Maneuver-induced tire debeading is a subject of further research.

5. Plans for Continuing Dynamic Test Research

As stated above, of the five maneuvers evaluated in Phase II, no single one in particular demonstrated greater suitability than the others for the intended purpose of comparing the rollover propensity of the test vehicles. Instead, the occurrences of TWL at any level were distributed among the different maneuvers, and the same is true of TWLs of greater than a minor amount. Thus, we did not succeed in finding just one or two dynamic tests that can effectively distinguish untripped rollover resistance. Also, it would be useful to investigate why the same maneuver run in different directions, for example a left versus right J-turn at a given speed, sometimes yielded different results. This, the resonant steer issue, and steering-induced tire debeading are some of several areas where we plan to continue research on dynamic rollover resistance testing.

D. How Do Dynamic Rollover Test Results Compare With Metrics?

As discussed above, TWL was the primary criterion for evaluating vehicle stability in Phase II dynamic tests. The basic pattern of TWL outcomes in the tests was fairly evident: vehicles with more truck-like characteristics (SUVs, 4WD pick-ups, and full-size vans) tended to have a higher frequency and a greater degree of TWL than vehicles with more car-like characteristics (minivans, two-wheel drive pickups, and passenger cars). As such, it was possible, without detailed analysis of the test results, to draw general conclusions about each vehicle's relative stability and about the various test maneuvers.

Nevertheless, it was desirable to compare the TWL outcomes with some objective indicators of vehicle stability, particularly metrics including SSF, Critical Sliding Velocity (CSV), and Tilt Table Angle (TTA) and to attempt to quantify the relationship between TWL and these metrics to the greatest extent possible using statistical methods.

To do so, the twelve test vehicles first were grouped according to whether they had any TWL in the Phase II tests. It was readily apparent that vehicles with lower metric values (less stable) experienced more frequent and/or a greater degree of TWL than vehicles with higher metric values (more stable). This was true using SSF, TTA, or CSV. Also, test vehicles with below median metric values (considering only the 12 test vehicles) were the only ones that had any TWL (there were two exceptions involving minor TWL, but in one case a tire problem may have influenced the outcome and in the other case the vehicle's CSV value was just slightly above the median). In statistical terms, a strong association was demonstrated between each metric and TWL as a yes/no variable by the fact that TWL occurred only on vehicles with below median SSF, CSV, and TTA values.

Next, the 12 test vehicles were grouped according to whether or not they had any *major* TWL in Phase II, the level of TWL which was thought to represent an actual rollover. Since only one vehicle had major TWL, this grouping meant that the eleven test vehicles without major TWL were all lumped into one category even though they represented a substantial range of metric values. The result was that the statistical tests did not identify a significant correlation between metric values and major TWL.

In a third analysis, the vehicles were grouped according to the highest level of TWL which they experienced during the Phase II tests. Numerical values were assigned as follows:

0=no TWL
1=minor TWL
2=moderate TWL
3=major TWL

When degree of TWL was identified using these designations, the association with metric values was statistically significant and a positive correlation between TWL level and metric values was indicated. (Note that correlations among various static metrics including SSF, TTA, and CSV, has already been established in past agency work [14].)

Overall, the results of the statistical analyses were somewhat ambiguous, as was expected given the low incidence of TWL during testing and the very small sample size overall.

V. Why Choose SSF?

A. Description of Metrics

The agency, vehicle manufacturers and others have used various ''metrics'' and driving maneuvers to characterize the rollover resistance of vehicles in particular situations. Metrics are usually measurements of dimensional, mass and inertial properties of vehicles or calculations combining these properties in ways intended to represent rollover resistance. They have also taken the form of the results of simple static tests

[14] ''Technical Assessment Paper: Relationship between Rollover and Vehicle Factors''; NHTSA; July 1991.

such as tilt table ratio or the combination of static measurements and simple driving maneuver tests such as ''stability margin''. In its ongoing rollover studies, the agency has used several metrics including Static Stability Factor, Tilt Table Angle or Ratio, Critical Sliding Velocity and Side Pull Ratio and various driving maneuvers including J-turn and fishhook maneuvers and sinusoidal steering.

Each of these indicators of rollover resistance has both advantages and disadvantages, and several would be acceptable candidates for comparative consumer information. The agency favors static stability factor because it is applicable to both tripped and untripped rollover. The causal basis for its good correlation to crash outcomes is clear. It is relatively simple for consumers to understand and can be measured inexpensively with good accuracy and repeatability. Also, changes in vehicles to improve static stability factor are very unlikely to cause unintended consequences.

The Static Stability Factor (SSF) of a vehicle is one half the track width, t, divided by h, the height of the center of gravity above the road. The inertial force which causes a vehicle to sway on its suspension (and roll over in extreme cases) in response to cornering, rapid steering reversals or striking a tripping mechanism, like a curb, when sliding laterally may be thought of as a force acting at the center of gravity (c.g.) to pull the vehicle body laterally. A reduction in c.g. height increases the lateral inertial force necessary to cause rollover by reducing its leverage, and the advantage is represented by an increase in the computed value of SSF. A wider track width also increases the lateral force necessary to cause rollover by increasing the leverage of the vehicle's weight in resisting rollover, and that advantage also increases the computed value of SSF. The factor of two in the computation ''t over 2h'' makes SSF equal to the lateral acceleration in g's at which rollover begins in the most simplified rollover analysis of a vehicle represented by a rigid body without suspension movement or tire deflections. In this form, it is easy to compare to the related metrics, Tilt Table Angle and Side Pull Ratio, which are similar except for the inclusion of suspension movement and tire deflections.

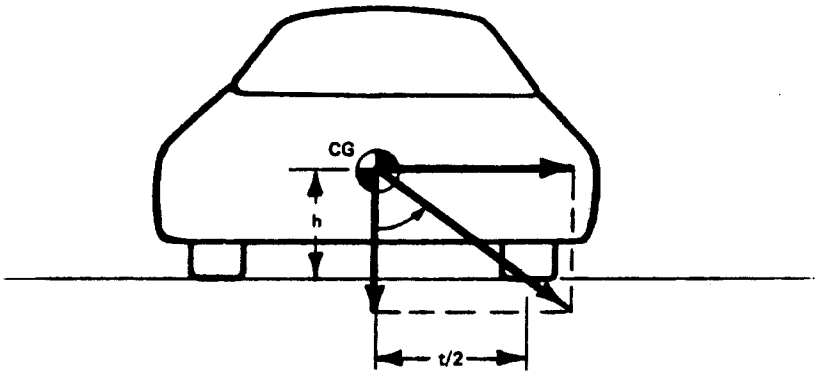

Figure 1. Components of SSF Shown at Critical Lateral Acceleration

A simple test of rollover resistance is to place a vehicle entirely on a table which tilts about a longitudinal axis and raises one side of the vehicle higher than another. As the table continues to tilt, it eventually reaches an angle at which the high side tires lift from the table, and the vehicle rolls over if not restrained. The critical angle is called the Tilt Table Angle. The trigonometric function, tangent, of this angle is the Tilt Table Ratio (TTR), which is the ratio of the component of the tilted vehicle's weight which acts laterally to overturn it, to the component perpendicular to the table which resists overturning. For an idealized vehicle without suspension movements, the TTR is the same as the SSF. The suspension movements of actual vehicles reduce the TTR about 10 to 15 percent relative to the SSF.

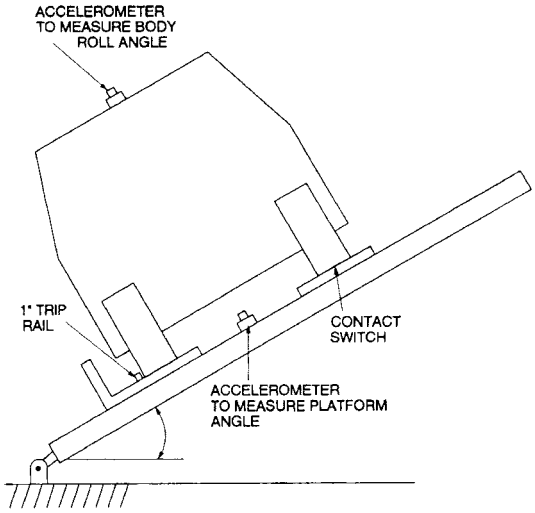

Figure 2 Vehicle on Tilt Table

The Side Pull Ratio (SPR) is the lateral force acting at the vehicle's c.g. necessary to cause two wheel lift, divided by the vehicle's weight. It is determined by a test which is conceptually identical to the tilt table test but which uses an externally applied lateral force to cause the wheels on one side of a vehicle parked on a horizontal surface to lift up. It exercises the vehicle suspension more realistically because the whole weight of the vehicle remains on its suspension. In the tilt table test, the vehicle can rise somewhat relative to the table surface because the component of the vehicle weight which compresses the suspension springs steadily diminishes as the angle of the table increases. For an idealized vehicle without suspension movements, the SPR also is the same as the SSF. Again, the suspension movements of actual vehicles reduce the SPR relative to the SSF by about 10 to 15 percent.

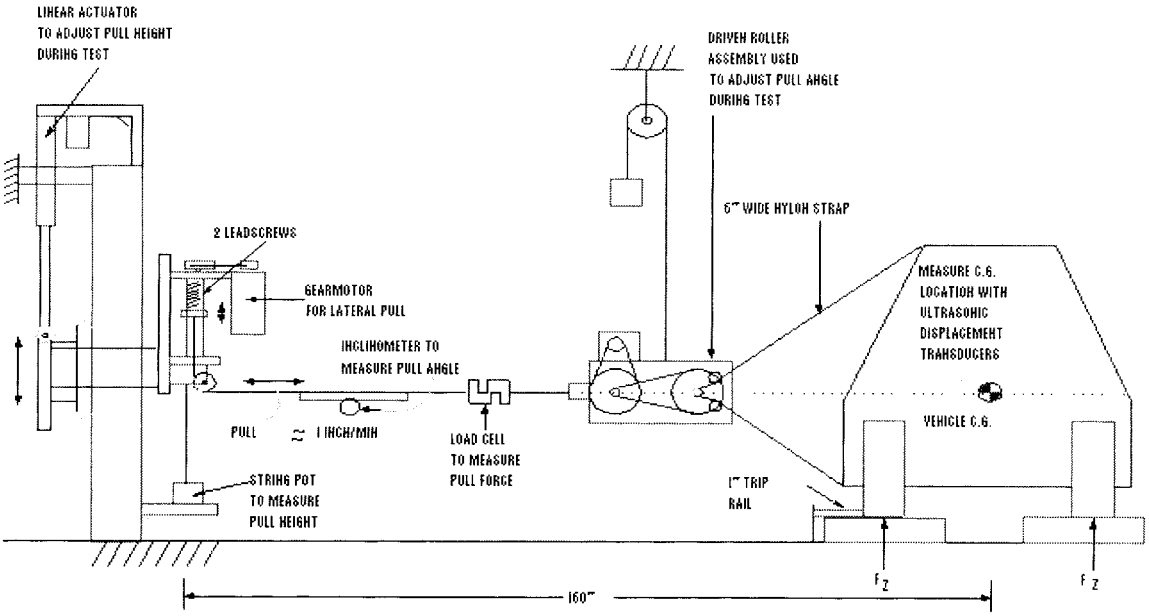

Figure 3 Side Pull Ratio Measurement

Critical Sliding Velocity (CSV) is a metric tied directly to tripped rollover. It is a calculation of the lateral velocity necessary to cause a rigid body representation of a vehicle to overturn upon impact with a rigid tripping mechanism. It includes the c.g. height, track width, mass and roll mass moment of inertia of the vehicle in the calculation.

Stability Margin is a metric directed toward on-road untripped rollover. It is the difference between the Side Pull Ratio of a vehicle and its maximum lateral acceleration in g's, as measured in a steady state cornering test. The steady state cornering test consists of finding the maximum speed the vehicle can maintain while following a circular path. The idea is that if the cornering acceleration the vehicle can produce is less than the SPR, it would not be possible for a rollover to occur simply as a result of steering maneuvers. GM recommends a margin of 0.2 g's because lateral accelerations in maneuvers with rapid steering reversals and/or brake release in a curve can be greater than those measured in a steady state test.

B. Tripped and Untripped Rollover

The terms on-road and off-road rollover are sometimes thought of as surrogates for tripped and untripped rollover. Off-road rollover does not refer to vehicles rolling over while trying to negotiate difficult trails away from public roads. It refers to vehicles leaving the road in the course of a crash and rolling over off the pavement. Usually, but not always, a curb, a soft shoulder, a ditch, loose gravel, a guard rail or another tripping mechanism initiates the rollover. In contrast, most people associate only the frictional force between the tires and the pavement rather than a tripping force with on-road rollover involving a single vehicle. This is also called maneuver-induced rollover.

Past NHTSA studies of crash data from the state of Maryland [15] and NASS [16] suggested that between 8 and 10 percent of single-vehicle rollover crashes were on-road rollover. However, a recent study of audited NASS CDS data (a data sampling system with projection factors to represent the national trends) estimated that while over 13 percent of rollovers in single-vehicle crashes occur on-road or on a paved shoulder, only 4.2 percent are untripped. Examples of on-road tripped rollovers are instances in which potholes or differences in pavement level acted as tripping mechanisms and the more common instances in which the wheel rim dug into the pavement (possibly as a result of tire de-beading). The study also estimated that only 0.2 percent of rollovers are untripped and off-road.

The agency has conducted studies of on-road untripped rollover because these events are considered egregious by the public and because the prospects of developing objective, repeatable and realistic vehicle tests of untripped rollover appeared to be more favorable than for tripped rollover, in which the circumstances are limitless. Many of the vehicle attributes that improve resistance to untripped rollover also improve resistance to tripped rollover. Certainly, a low c.g. and a wide track width are beneficial in resisting rollover in general.

However, even objective and repeatable steering maneuver tests present a dilemma. Suppose the first vehicle responds to steering maneuvers up to a high test speed and two wheel lift occurs. Suppose the second vehicle spins out or plows out at a significantly lower speed, but two wheel lift does not occur. Which vehicle has better performance in rollover resistance? If untripped on-road rollover is the only criterion, the second vehicle has demonstrated better performance because it cannot be controlled through a test maneuver severe enough to cause two wheel lift. But the test tells us nothing about the far more likely risk of tripped rollover. We do not know how the second vehicle would have performed under the same lateral acceleration that caused two wheel lift in the first vehicle.

Stability Margin shares the dilemma for vehicle comparisons described above. The SPR component of stability margin compares vehicles on an equal basis that would be meaningful for tripped or untripped rollover, but the subtraction of the maximum on-road lateral acceleration limits the applicability of the margin to on-road untripped rollover. Simply fitting the same vehicle with lower traction tires increases the stability margin without making any difference when a tripping mechanism is encountered. Even when the scope of interest is limited to on-road untripped rollover, Stability Margin is unsuitable for comparative purposes. A greater stability margin does not necessarily mean more safety. A margin in excess of the minimum necessary to avoid untripped rollover may simply represent poor cornering capability.

The steering maneuver tests studied by the agency were consistent with SSF, TTR and CSV. The only vehicles that experienced two wheel lift in the maneuvers were those at the lower range of the metrics. However, the steering maneuver tests studied do not distinguish between those vehicle attributes that increase rollover resistance in all circumstances and those applicable only in the narrow risk category of on-road untripped rollover. Therefore, the steering maneuver tests recently studied are not considered as appropriate for general consumer information on rollover as SSF, TTR or CSV.

C. Correlation and Causation

Correlation means that two events generally occur together. However, the fact that event B occurs when event A occurs does not mean that event B occurs because event A has occurred. Thomas Sowell, the economist and columnist, notes that youngsters who voyage on the Queen Elizabeth II or ride on the Concorde tend to make more money as adults, but that we don't recommend buying tickets for these as a way to increase a child's earning potential. Childhood luxury trips are correlated to future earnings, but do not cause the higher income.

A causal relationship, on the other hand, means that event B occurs because event A has occurred. These events are not simply linked in time, like in a correlation, but event A is a necessary element for event B to occur. In a simple form, the plant grows because of the light. Light is not the only thing needed for the plant to grow, and the plant may die even if it receives plenty of light, but there is a causal relationship between inadequate light and plant death.

Just as with light and plants, a low SSF is not the only thing that is needed for a rollover and a rollover may occur even if a vehicle has an excellent SSF, but there is a causal relationship between SSF and rollover. At the initiation of either tripped or untripped rollover, the moment arm for the principal overturning force is the c.g. height, and the moment arm of the principal restoring force is the track width divided by two. In the case of tripped rollover, the severity of the impact with a tripping mechanism determines the principal overturning force. Depending on the circumstances, roll moment of inertia, suspension deflections, tire properties and other vehicle properties influence rollover—but never to the exclusion of c.g. height and track width. Among the many causal factors included in mathematical models of various rollover scenarios, c.g. height and track width are always present and usually exert the most influence.

While the vehicle properties represented by SSF, TTR, SPR and CSV are directly and causally related to vehicle rollover, that alone does not prove that the vehicle properties exert enough influence to be noticed in the context of the driver and roadway variables. Especially in the context of tripped rollover, the circumstances of the crashes and the nature of the tripping mechanisms may be nearly unique from crash to crash. Examination of a large number of crashes may be necessary to detect even powerful influences with any degree of certainty. Statistical correlation of the metrics to the rate of rollover occurrences of representative vehicles in actual crashes is the usual method of determining their influence. The agency has demonstrated significant correlations between SSF, TTR and CSV and the rate of rollovers

[15] E.A. Harwin and L. Emery; ''The Crash-avoidance Rollover Study: a Database for the Investigation of Single-vehicle Rollover Crashes;'' 12th International Technical Conference on Experimental Safety Vehicles, Goteburg, Sweden, May 29–June 1, 1989; Vol 1, p. 470–477.

[16] ''Technical Assessment Paper: Relationship between Rollover and Vehicle Factors''; July 1991. Computation of untripped rollover based on 1989 NASS.

per single-vehicle crash in past studies of the crash reports recorded by particular states.[17],[18] The agency has consistently found that given a single-vehicle crash, the SSF, TTR or CSV of the vehicle is a good statistical predictor of the likelihood that it will roll over. The number of single-vehicle crashes has been used as an index of exposure to rollover because it eliminates the additional complexity of multi-vehicle impacts and because about 82 percent of light vehicle rollovers occur in single-vehicle crashes.

The statistical study described in the Appendix to this notice was undertaken to develop a relationship between SSF and rollover rate representative of the whole country rather than a particular state. The average rollover/single-vehicle crash rate varies from state to state because of differences in reporting thresholds for single-vehicle crashes and real differences in road conditions, vehicles and drivers. A relationship between rollover rate and SSF normalized to the national rollover rate and to a nationally representative set of driver and road use variables was developed as a basis for a comparative rating system for rollover risk in the event of a single-vehicle crash. We had available crash reports of 185,000 single-vehicle crashes from six states from 1994 to 1997 in which it was possible to determine the make/model of the vehicles and whether rollover occurred in the course of a single-vehicle crash, and for which SSF data were also available. We also had the NASS GES data sampling system, with far fewer but nationally representative crash reports, to determine the national average rollover rate for the population of vehicles investigated in the state reports.

The study of state reports of single-vehicle crashes was performed as a regression analysis, in which the square of the coefficient of regression (the R^2 statistic) indicates the degree to which the differences between the data samples can be explained by the independent variables. In this case, the R^2 calculated for the rollover rates of about 100 vehicle make/models as a function of SSF ranged from 0.53 to 0.76 across the states. This means that between 53 percent and 76 percent of the differences in rollover rate of the subject vehicles can be explained by differences in SSF.

However, an analysis using only SSF does not preclude the possibility that cross correlations of SSF with other factors could create a level of correlation beyond the causal relationship of SSF to rollover. For example, if the drivers of vehicles with low SSF were generally more aggressive, the degree of correlation could be raised by the greater chance of these vehicles leaving the road at high speed. Likewise, if vehicles in a particular range of SSF were operated more often than others on poor road surfaces, their exposure to tripping mechanisms as well as their rollover resistance would be reflected in a correlation with SSF. Because of the possibility that the apparent influence of SSF on rollover could be due in part to cross correlations, the agency also performed a stepwise regression analysis in which the available variables describing driver and road characteristics were given the first opportunity to explain the differences among vehicles in rollover rate. In this analysis, cross correlations would reduce the apparent influence of SSF because part of its effect would have already been included in a cross correlated driver or road variable. The driver and road use characteristics recorded in the crash reports of the various states included gender, age, alcohol involvement, number of occupants, day or night, stormy weather, road speed limit over 50 mph, bad road or road surface, rural location, curve, and hill. When only the driver and road use variables, but not the SSF, for each vehicle were considered, it was found that their cumulative information could explain between 53 and 69 percent (differing with State) of the variability between vehicles in rollover rate. When SSF was added to the available driver and road characteristics, the explanatory power of the information increased to between 85 and 90 percent. The addition of SSF explained between 64 and 80 percent of the variability remaining after consideration of the driver and road variables.

The six-state model that included all 185,000 single-vehicle crashes yielded similar results. When only the SSF of the vehicles is considered (with a correction for systematic differences between States) the R^2 statistic was 0.73; when the driver and road variables rather than SSF were entered, the R^2 statistic was 0.58; and when the SSF was added to the driver and road variables R^2 statistic rose to 0.88. In the direct correlation, SSF appeared to explain about 72 percent of the variability in rollover rate between crash experiences of about 100 vehicle/make models in six states. If cross correlations between the vehicle SSF and driver and road variables cause the direct correlation to be optimistic, the same cross correlations would diminish the apparent influence of SSF in the stepwise regression in which the driver and road variables alone were entered first. However, SSF remained influential in the stepwise regression with the power to explain 72 percent of the remaining variability after the entry of the driver and road use variables. (Note: The similarity of 72 and 73 percent in the two analyses is merely a coincidence. While 73 percent is the R^2 statistic in the direct correlation, 72 percent is the ratio $(0.88 - 0.58)/(1.0 - 0.58)$ in the stepwise analysis.)

Rollover is a very complex event, heavily influenced by driver and road characteristics as well as vehicle properties. The most important non-vehicle variable may be the speed at which the vehicle leaves the roadway, for which some of the driver and road use variables are only broadly indicative. However, the directly causal influence of SSF is sufficient to explain a large portion of the variability among vehicles in real-world crash experiences in either a direct correlation or stepwise analysis of the variability remaining after consideration of driver and road use variables. It is not lost in the noise of complex circumstances, and its explanatory power exceeds the cumulative explanatory power of all other available driver and road use variables in most instances.

The same analyses using TTR or CSV would be expected to yield similar results based on past agency studies. In fact, CSV might show slightly higher correlations because most rollovers are tripped. However, the choice of a rating metric was not made simply for incremental gains in R^2 among metrics, since each one provides a high level of correlation to rollover crash rates. The simplicity and generality of SSF have value in a rating system intended for consumers. In addition, there is only modest room for improvement over a metric which already explains 73 percent of the variability in rollover rates left after application of driver and road use variables.

In some analyses, the inclusion of wheelbase, which is simple, improves the correlation coefficient. Wheelbase has not been included here because, unlike the components of SSF, it does not have a direct causal relationship with rollover. It may be a surrogate for roll moment of inertia, yaw moment of inertia, or pitch moment of inertia, each of which may influence rollover in

[17] *Ibid.*

[18] E.A. Harwin and Howell K. Brewer; ''Analysis of the Relationship between Vehicle Rollover Stability and Rollover Risk using the NHTSA CARDfile;'' NHTSA, 1989.

certain circumstances. Alternatively, wheelbase may be a surrogate for owner demographics within certain vehicle classes. We have chosen not to include factors which correlate to rollover through cross correlation to other undefined factors.

D. Simplicity and Measurability

The principle of SSF is obvious. The fact that an object which is more top heavy or narrower at its base can be turned over more easily is encountered repeatedly in common experience and is intuitive for most consumers. Track width is a straightforward dimensional measurement which can be measured very accurately given sufficient care, and special fixtures and calipers can be constructed to make the task easy. In past comments to the agency, lack of repeatability of c.g. height measurement between various labs was cited. However, improvements in equipment and technique have taken place. The agency's own lab and a contractor using similar equipment report errors no greater than one half of one percent in c.g. height measurement of vehicles.[19]

Tilt Table measurements expressed either as TTR or TTA also have the advantage of accuracy and relative ease of measurement. The process of tilt table measurement should make intuitive sense to the public, but the conversion from an angle to a trigonometric ratio may not. The reporting of the angle is less complicated, but it creates a non-linear measurement that does not increase as rapidly as the actual improvement of rollover resistance expressed in TTR.

CSV would be easier for the public to understand were it the result of a full scale vehicle test rather than the computation of a simplified model. While the public should understand track width and c.g. height, the additional concept of roll moment of inertia is outside common experience. The simplified model also results in CSVs that are unrealistic in absolute value, though useful for comparison of vehicles. The computation predicts that lateral speeds of 10 to 15 mph are sufficient for tripped rollover of virtually all light vehicles from large cars to compact SUVs. The low threshold may not appear to be credible to consumers who have experienced hard curb contact with only wheel and tire damage and may trivialize the information by causing consumers without such experience to conclude that all vehicles will turn over so easily that differences between vehicles are not worth consideration.

In fact, the lateral speeds for tripped rollovers of actual vehicles in common circumstances would always be greater than the computed CSV. Instead of being available to raise the vehicle's c.g. to the rollover point, much of the kinetic energy from the vehicle's lateral speed would be dissipated by tire contact with the ground, stored or dissipated in tire and suspension deflections, and dissipated in the permanent deformation of vehicle suspension components and of the tripping mechanism. The calculation of CSV requires a measurement of roll moment of inertia in addition to the measurements needed to calculate SSF, but that is not an obstacle. The agency's own lab and a contractor using similar equipment report errors no greater than two percent in roll moment of inertia measurements of vehicles.

Side Pull Ratio has intuitive appeal if one can understand that the inertial forces which cause tripped or untripped rollover can be represented by forces applied in a laboratory with a cable pulling at the c.g.. However, it is difficult to coordinate the movement of the outboard end of the cable with vehicle roll motion and to avoid applying extraneous vertical forces. For this reason SPR is often estimated from SSF with modifying factors for the roll stiffness of the vehicle and its general suspension type.

The simplicity and relative ease of measurement of SSF and TTR are advantageous for consumer information.

E. Unintended Consequences

In comments to the 1992 ANPRM on rollover issues, several manufacturers pointed out that some changes that could improve a vehicle's tilt table performance may degrade its control and handling attributes. Aspects of suspension design, such as choices of front to rear roll stiffness ratio and overall roll stiffness, could be different from those now chosen to balance ride quality, handling, tire wear and other important features if they were influenced by a desire to maximize TTR. Commenters to the same docket claimed that measurements of c.g. height were difficult and not repeatable in comparison to the tilt table measurement.

These comments presented the agency with a dilemma. The most practical rollover resistance metric from a measurement viewpoint, TTR, had the potential to introduce new trade-offs for suspension designers. Obviously, the agency does not want vehicle manufacturers to depart from designs which they believe optimize safe handling and directional control. Improvements in the methods of measuring the c.g. height of vehicles have occurred that resolve the concerns raised in the comments. SSF is now as practical and repeatable a measurement as TTR.

Changes in track width or c.g. height to improve SSF do not require trade-offs of handling and control. In general, those particular changes would make it easier to achieve good handling. A potential trade-off discussed in the agency's 1987 denial of a rulemaking petition for a minimum level of SSF was the possibility of manufacturers reducing the strength of the upper structure of vehicles in order to lower the c.g.. At that time, FMVSS No. 216 on roof crush resistance did not apply to SUVs, vans or pickup trucks. Beginning with the 1995 model year, the roof crush resistance of light trucks including SUVs and vans has been included in the regulation, making that potential choice to compromise safety even less likely.

VI. Why Not a Standard?

The action contemplated by this notice follows a decision by the agency (59 CFR 33254) to terminate rulemaking on a minimum standard for rollover resistance and to pursue the consumer information approach instead. In the analysis leading to that decision, the agency concluded that both Tilt Table Angle and Critical Sliding Velocity were causally related to rollover and had a strong statistical relationship to rollover frequency. However, the benefits achieved by setting a minimum level for a rollover metric, even well beyond that of truck-based SUVs or full size vans, were not great enough to compel the costs of fundamental vehicle changes and the loss of attributes desired by customers. Also the redesign could result in the elimination of some classes of vehicles, such as compact SUVs.

The above conclusions about a general rollover standard recognized that most rollovers are tripped. The circumstances of tripped rollover usually involve leaving the road surface unintentionally and hitting a tripping mechanisms such as a curb, a ditch or soft soil. There is a nearly infinite variety of tripping mechanisms and ways in which vehicle can strike them. Basic changes in the geometric properties of vehicles, as reflected in SSF, TTA, and CSV, are necessary for realistic improvements in tripped rollover resistence. However, improvements in on-road untripped rollover performance may not require

[19] Heydinger, G.J., et al; ''Measured Vehicle Inertial Parameters—NHTSA's Data through November 1998;'' Society of Automotive Engineers 1999–01–1336; March, 1999.

geometric changes at odds with the attributes consumers seek in certain classes of vehicles. While tripped rollover is much more common than untripped rollover, there is public concern about the danger of untripped rollover. The agency remains interested in the possibility of a minimum performance standard to address the problem of untripped on-road rollover. Its seeks comment on the need for a standard addressing on-road untripped rollover and requirements that may be appropriate for such a standard.

The analysis of benefits in the 1994 notice to terminate rulemaking for a minimum standard was concerned primarily with tripped rollover. The expected benefits of a potential minimum standard were based on a logistic regression analysis of the sensitivity of rollover risk in single-vehicle crashes to changes in rollover resistance metrics. Rollover metrics such as TTA, CSV, and SSF are relevant to tripped rollover. The outcome of each crash in a data base of 90,000 single-vehicle crashes reported by the state of Michigan was re-evaluated individually changing the rollover resistance metric but retaining the other vehicle, driver, and road characteristics of the actual crashes. The result was a set of predictions by vehicle class of the sensitivity of rollover rate to incremental changes in the rollover resistance metric, while preserving the potentially influential demographic and environmental factors associated with actual crashes of vehicles in particular classes. The percent improvement in rollover rate for a vehicle class was determined from the production volume, single-vehicle crash rate, and amount of change in the rollover resistance metric demanded by a potential standard for the vehicles in that class. The benefits were calculated from the reduction in rollover rate for the vehicle class, the total number of fatalities and injuries occurring in vehicles of that class, and the degree of harm mitigation accomplished when a crash is prevented from becoming a rollover crash.

Rollover prevention was not considered crash prevention but rather a reduction in the severity of crashes by 52 percent in fatalities and 25 percent in injuries. The mitigation value of rollover prevention was estimated by comparing the harm to occupants in single vehicle crashes with and without rollover in the NASS database for the years 1988–91.

Note that the demographic variables are handled differently for estimating the sensitivity of rollover risk to vehicle metrics for analyses of a minimum standard versus consumer information. In the case of a minimum standard, it is assumed that the driver and roadway demographics of a vehicle class remains unchanged but that the vehicle metric of some vehicles in the class changes. In the case of consumer information, the rollover risk of all vehicles is estimated using the same set of average demographic variables because individual consumers do not change their age, gender or driving environment as a result of vehicle choice.

At a minimum TTA of 46.4 degrees (equal to a TTR of 1.05 and equivalent to a minimum SSF of about 1.18), reductions of 63 fatalities and 61 serious injuries were estimated. No standard van and few, if any, compact SUVs with permanent top structures could meet that hypothetical standard, and a third to a half of compact pickups, minivans and standard full size SUVs were found to be unable to meet it. A parallel analysis using CSV instead of TTA yielded similar results except that standard vans were unaffected because their large roll moments of inertia improve CSV. Most of the benefits were calculated on the basis of increasing the rollover resistance of some compact pickups and many compact SUVs on the order of 10 percent of the TTR.

Changes in c.g. height or track width of vehicles to increase rollover resistance by 10 percent are substantial and compromise some of the attributes consumers desire. For example, a 10 percent increase in track width (which would increase TTR about equally) is nearly 6 inches for a typical compact SUV. Substantial chassis changes would be required to accomplish that large an increase in track width, and body changes would be necessary to cover the wheels. These changes would tend to narrow the size distinction between compact and standard SUVs. Similarly, lower c.g. heights reduce ground clearance and possibly the size of objects that may be hauled. Vehicles actually designed for off-road driving where narrow width and high ground clearance is necessary would be eliminated by minimum requirements for TTA, SSF or CSV found to have even modest benefits. Compact SUVs with enough ground clearance to negotiate roads with unplowed snow would likely have to be redesigned for greater width.

The agency decided instead to pursue a consumer information program to enable consumers to make informed choices about the tradeoffs in vehicle attributes, such as high ground clearance, and rollover resistance. It would inform drivers of the general difference in rollover resistance between light trucks and cars and among vehicles within the various classes. Consumers who need or desire a particularly high cargo space or off-road driving adaptations such as a large amount of ground clearance and narrow track width would not be denied the chance to purchase such vehicles. However, consumers who choose vehicles with relatively low rollover resistance would do so with knowledge of that fact, something that is not true today. The consumer information program would also inform drivers who choose vehicles with less rollover resistance that their risk of harm can be greatly reduced with seat belt use to avoid ejection. In addition, NHTSA believes that a consumer information program would serve as a market incentive to manufacturers in striving to design new vehicles with greater rollover resistance.

As explained above, NHTSA has previously decided that it will not set a vehicle rollover standard at a level that would effectively force nearly all light trucks to be redesigned to be more like passenger cars (in the 1987 denial of the Wirth petition, 52 FR 49033). NHTSA has also previously decided that we will not set a vehicle rollover standard at a level that would effectively force a redesign of some vehicle types like small pickups and small sport utility vehicles (in the 1994 termination of rulemaking to establish a minimum vehicle standard for rollover resistance based on TTA or CSV, 59 FR 33254). Even though we cannot justify prohibiting the manufacture and sale of these vehicles, we are now proposing to provide the public with accurate and meaningful information about the rollover resistance of these vehicles and allowing the public to make fully informed choices when selecting a new vehicle.

Some have previously argued that NHTSA cannot and should not provide consumer information about the relative performance of vehicles until the agency has first established a minimum performance standard for performance in that area. The implicit underpinning of this argument is that the American public deserves the protection of a minimum performance standard if NHTSA can show that performance in an area is sufficiently related to on-road safety performance. Only after the agency has established a minimum performance standard, according to this argument, can NHTSA supplement the standard with consumer information if additional measures are needed.

Whatever the merits of this position generally, NHTSA does not find this argument persuasive in the context of light vehicle rollover. Following this

position, NHTSA must devote time and resources to establish a minimum standard for SSF. Given the agency's previous conclusions about standards that eliminate classes of light trucks, the standard would likely be set at a level that would not effectively eliminate recognized vehicle types. Thus it would have to be set at a level that small pickups and small SUVs could meet. Such a standard would have extremely small benefits. After the rulemaking for this minimal-benefit standard was complete, NHTSA could then try to develop a meaningful consumer information program along the lines laid out in this request for comments. The effect of the minimal-benefit rulemaking appears to be primarily to delay giving the American public meaningful rollover information. However, commenters who advocate this approach are invited to clarify why they believe such an approach is appropriate in the context of rollover and how this approach would serve the safety interests of the American people.

NHTSA agrees that it has a high burden when it proposes to establish a program for relative consumer information in an area where the agency has not established a minimum safety standard. In the case of light vehicle rollover, however, we believe there is a compelling case to provide SSF as consumer information. The physics of SSF and its causal relationship to rollover are indisputable. SSF is not an untried approach that NHTSA has just discovered in some research. Instead, the formula for calculating SSF is well-known and widely-accepted. Each of the manufacturers with which NHTSA has discussed light vehicle rollover said that they know the SSF for each of the vehicles they manufacture. The correlation of SSF to rollovers per single vehicle crash is remarkably robust in an area as complex as rollover, as detailed in the Appendix to this notice. When the science suggests a causal relationship between a vehicle metric and a safety problem, real world data confirm that relationship, the metric that will be provided as consumer information is already in general use by the industry, and can be repeatably measured at different facilities, we believe that information ought to be shared with the American people to allow them to make informed purchase decisions *regardless* of whether the vehicle metric is also part of a minimum safety standard. Again, public comment is requested on this position.

VII. Consumer Information Presentation

A. How Consumers Want To See Information Displayed

Eighty percent of respondents to a 1997 NHTSA survey felt that comparative safety ratings of motor vehicles should be available to the public. Therefore, we assume that consumers would be interested in comparative rollover information. In April 1999, we conducted a series of six focus groups to examine ways of presenting comparative rollover information. Two focus groups were conducted in each of three locations: Dallas, Texas; Overland Park, Kansas (a suburb of Kansas City); and Richmond, Virginia.

Our study found that:

- Participants underestimated the size of the rollover problem and were surprised when informed of the actual size.
- Participants enthusiastically supported the idea of having rollover information available in both point-of-purchase (label) and brochure formats.
- Among the options presented, participants were most comfortable with ratings based on stars.
- Participants also agreed that a graphic showing a tilted car would be the clearest in conveying the message of rollover and would have the most impact on purchasers.

We have placed the complete focus group report in the docket for interested parties. While the focus group results support use of either stars or a tilting vehicle graphic to represent the ratings, NHTSA is considering the use of stars. Stars are already used for the front and side NCAP ratings, and thus use of stars for rollover would be consistent.

B. Converting SSF Measurements to Star Ratings

Since the consumer focus groups recommended a simple representation of comparative risk using stars, we have devised a procedure to rank vehicles for rollover risk and assign stars based on the statistical study described in the Appendix, which estimated the relationship between the SSF of a vehicle and the incidence of rollover in single-vehicle crashes (82 percent of rollover crashes are single-vehicle crashes).

To repeat, any vehicle can be made to roll over if it strikes an effective tripping mechanism at a great enough lateral speed. The combinations of conditions in real-world single-vehicle crashes are limitless. Some conditions are so severe that any vehicle would roll, and others would not trip even the least stable vehicle. Nevertheless, when a statistical sample of real-world crashes is taken, it is clear that vehicles with a low SSF roll over more frequently than those with a high SSF despite the unique circumstances of individual crashes. The observed rollover rate for a particular make/model in the statistical study was not included unless it was based on at least 25 single-vehicle crashes in a particular state, and it received less weighting unless it was based on at least 250 single-vehicles crashes in that state. Likewise, the adjustment of individual vehicle rollover rates to a common demographic base in estimating the risk relationship with SSF was a step to reduce the influence of the variety of conditions in single-vehicle crashes.

The result of the study was an equation relating the SSF to the estimated number of rollovers per single-vehicle crash, after accounting for differences in driver, road and environmental factors. This estimate of rollovers per single-vehicle crash represents the risk of rollover given a single-vehicle crash:

$$\text{Estimated rollovers per single-vehicle crash} = 13.25 * e^{(-3.3731 * SSF)}.$$

The computation of SSF at meaningful increments of estimated rollover risk, using this equation, offers a basis for a star rating. The risk of rollover indicated by the star rating pertains to the likelihood of rollover in the event of a single vehicle crash of sufficient severity to cause a police report. It broadly estimates the risk, per event, of a single vehicle crash becoming a rollover; it is not a measure of the risk of rollover over the life of the vehicle. We are defining the rating intervals as follows:

ONE STAR (★): Risk of Rollover 40 percent or greater is associated with SSF 1.04 or less.

TWO STARS (★★): Risk of Rollover greater than 30 percent but less than 40 percent is associated with SSF 1.05 to 1.12.

THREE STARS (★★★): Risk of Rollover greater than 20 percent but less than 30 percent is associated with SSF 1.13 to 1.24.

FOUR STARS (★★★★): Risk of Rollover greater than 10 percent but less than 20 percent is associated with SSF 1.25 to 1.44.

FIVE STARS (★★★★★): Risk of Rollover less than 10 percent is associated with SSF 1.45 or more.

The relationship between SSF and rollovers per single vehicle crash which is reflected in the star ratings above was derived by the statistical method described in the Appendix to best

estimate the national trend between rollover risk and SSF. The relationship appears to be constant over the four years of state crash data analyzed, but the agency intends to continue to monitor it as newer crash data becomes available. Should changes in road conditions, demographics, or vehicles alter the relationship, the levels of risk associated with the star ratings would be adjusted.

The rollover ratings should be distinguished from the frontal and side crash star ratings. The present star ratings are measures of the crashworthiness of the body structure and restraint systems of a vehicle in the event of a frontal or side crash. The rollover risk rating does not pertain to the crashworthiness of the vehicle in a rollover crash. Instead, it estimates the likelihood that a rollover will occur in the event of a single vehicle crash. The majority of rollovers occur in single vehicle run-off-the-road crashes, and the majority of deaths in rollover crashes are the result of ejection from the vehicle. The frontal and side crash ratings are direct estimates of the probability of serious injury in those types of crashes. The rollover star rating will estimate the probability of a single vehicle crash becoming a rollover, but the probability of a serious or fatal injury in a rollover depends heavily on the occupant's decision to protect himself or herself against ejection through the use of seat belts.

Like frontal and side NCAP ratings, the rollover rating is concerned with vehicle attributes that affect the outcome of a crash. None of the ratings attempt to describe the probability of a vehicle's involvement in crashes in the first place. It can be argued that vehicles with anti-lock brakes are less likely to have frontal crashes, but that possibility does not alter the frontal crashworthiness star rating. Likewise, it may be argued that short wheelbase vehicles are more likely to be involved in single vehicle run-off-the-road crashes, but that possibility would not alter the star rating of the probability of a rollover given the event of a single vehicle crash. Stability control and other advanced vehicle systems are being developed to reduce the instances of loss of control which can cause run-off-the-road crashes. However, such advanced systems would not affect the probability of rollover in those single vehicle run-off-the-road crashes still occurring even with those systems, and would not affect the rollover star rating given a vehicle. While the effectiveness of stability control technology in crash reduction is presently unproven, its potential is of great interest. If stability control technologies are proven to have a significant effect on the exposure of vehicles to off-road crashes, we would consider adding information about the equipment to the presentation of the rollover information. Commenters are invited to share any data they may have on the effectiveness of these stability control technologies in preventing single vehicle crashes.

Of course, as in all NCAP information, the numerical measurements as well as the star interpretation of risk would be available to consumers. The NAS study recommended that NHTSA provide consumer information in a hierarchy of detail, so consumers can find information at the level they are comfortable with. In addition, various focus groups have suggested that making the more detailed information available increases consumer confidence in the ratings, even if the consumer does not actually use the information.

VIII. Rollover Information Dissemination Through NCAP

A. Why NCAP Rather Than Vehicle Labeling?

In the 1994 NPRM the agency proposed a consumer information regulation for rollover. The proposal called for each new vehicle to be labeled with information about its rollover resistance and information about the range of rollover resistance for cars and light trucks. This regulation would have mandated participation of the vehicle manufacturers. The testing and labeling would have been done by the manufacturers, and associated costs borne by them. Manufacturers would have been required to report a rollover resistance metric (TTA and CSV were discussed in the proposal) for each make/model to NHTSA by January 1 of each year. Manufacturers would decide how to group vehicle models for reporting. NHTSA would mandate a specific test procedure and accuracy tolerance for reported data, to prevent either over- or understatement of the rollover metric. NHTSA would then receive and process the information reported by the manufacturers to provide the manufacturers with the ranges of metrics for cars and for light trucks by April 1.[20]

By September 1 each year all new vehicles would have been required to have a window sticker showing this rollover information. Again, the format, location, and language of the label would have been set forth by regulation. The regulation would also have required specific information about rollover to appear in each vehicle owner's manual.

The agency estimated, in 1994, that the costs to manufacturers associated with this mandatory program would be between 3.93 and 6.35 million dollars, depending on which specific vehicle metric was required. These costs would come from generating the metric for the labels, printing the labels and affixing the labels to the vehicles.

The advantage of a vehicle labeling requirement is that the information is provided to all consumers without the need to ask for it. This advantage was reflected in the focus group study. However, the labeling of vehicles with one safety attribute to the exclusion of others may be misleading. Also, using a label listing a single-vehicle safety attribute would be contrary to the principles of the NAS study on consumer information that the agency was directed to consider. That 1996 study recommended the development of an overall measure of vehicle safety. Until that goal can be met, the presentation of our proposed measure of rollover risk, in the context of our established measures of frontal and side impact crashworthiness in NCAP, would, in our opinion, go a long way toward addressing NAS's concern for presenting overall vehicle safety. It also provides some practical advantages:

- Implementation would be faster. The program would be able to start almost immediately, so consumers would have the information sooner.
- NHTSA retains control of vehicle measurement so the consumer will know exactly which vehicle model/equipment combination was tested.
- It takes advantage of the existing NCAP organization within NHTSA equipped to perform vehicle tests and disseminate consumer information and avoids the need for a compliance function within NHTSA to collect and process manufacturers' test reports and provide to manufacturers the vehicle ranges required on the labels.

While we believe NCAP is the most immediate, inexpensive, and efficient way to get rollover information to the consumer, we would like to receive comments from the public on the merits of this type of program as compared to labeling individual vehicles so that consumers receive the information at the point of sale. NHTSA, in partnership with AAA, distributes approximately 600,000 Buying a Safer Car brochures annually. Buying a Safer Car provides NCAP ratings and other safety feature

[20] Under this proposal the actual measurement, not a star ranking, would have been reported on the label, along with the range of data from all manufacturers for cars and for light trucks, so the consumer could see where each vehicle fell in range of available choices.

information for new models. In addition, NHTSA gets approximately 22,000 visitors per week (or approximately a million visitors a year) to the web site location for the NCAP ratings.

B. Addition of Rollover Stability Stars to NCAP

The agency has tentatively decided to go forward with a pilot consumer information program on vehicle rollover resistance, using the SSF as a basis for the rating system. This program would be part of NCAP, which currently gives consumers information on frontal and side-impact crashworthiness. We hope to have the pilot rollover information program ready for the 2001 model year.

The rollover information program would operate very much as the current NCAP does today. New models would be selected for testing before the beginning of the model year. Selection would be based primarily on production levels predicted by the manufacturers and submitted to the agency confidentially. Consideration would also be given to vehicles scheduled for major changes, or new models with specific features that may affect their SSF's. The vehicles chosen for NCAP testing would be procured and measured by NHTSA as the vehicles become available. Vehicles would be procured with popular equipment, typical of a rental fleet, and the equipment with possible influence on SSF would be included in the vehicle description. Two wheel drive and four wheel drive versions of a vehicle would be treated as separate models because a four wheel drive option can have a significant effect on SSF. As provided for in the present NCAP, manufacturers can, at their option, pay for tests of vehicles, models or configurations not included in NHTSA's test plan if they wish to inform consumers through the program. (Vehicle purchase and testing is done by a NHTSA-approved testing laboratory.) The SSF would be converted to a ''star'' rating according to the curve presented earlier. The rollover ''star'' information would be published by NHTSA and placed on the agency's web site. The brochures and the web site presentation would explain the basis of the ratings, make available the SSF measurements, and discuss the magnitude of rollover harm prevention provided by safety belt use.

As part of the presentation on rollover in NHTSA brochures and on our web site, we will include explanatory language for consumers. The following two paragraphs are illustrative of the information that would be presented:

Rollover is a very complex event, heavily influenced by driver and road characteristics as well as the design of the vehicle. Most rollovers occur when a single vehicle runs off the road and is tripped by a ditch, soft soil, a curb or other object. The speed at which the vehicle leaves the roadway is always important to the risk of rollover. The NCAP rating is based on Static Stability Factor, essentially a measure of how ''top heavy'' a vehicle is. Static Stability Factor can be used to predict the risk of rollover in the real world. In fact, a statistical study of 185,000 single vehicle crashes in six states involving 100 popular vehicle models confirmed Static Stability Factor's relationship to the actual occurrence of rollover crashes. Vehicles with greater Static Stability Factors are less ''top heavy'' and are awarded more stars in proportion to their reduced risk of rollover in the event of a single-vehicle crash.

Regardless of vehicle choice, the consumer and his or her passengers can reduce their risk of being killed in a rollover crash dramatically by simply using their seat belts. Seat belt use has an even greater effect on reducing the deadliness of rollover crashes than on other crashes because so many victims of rollover crashes die as a result of being partially or fully thrown from the vehicle. NHTSA estimates that belted occupants are about 75% less likely to be killed in a rollover crash than unbelted occupants.

IX. Rulemaking Analyses and Notices

Executive Order 12866

This request for comment was not reviewed under Executive Order 12866 (Regulatory Planning and Review). NHTSA has analyzed the impact of this request for comment and determined that it is not a ''significant regulatory action'' within the meaning of Executive Order 12866. The agency anticipates that providing information on rollover risk under NHTSA's New Car Assessment Program would impose no regulatory costs on the industry.

X. Submission of Comments

A. How Can I Influence NHTSA's Thinking on This Document?

In developing this document, we tried to address the concerns of all our stakeholders. Your comments will help us improve this notice. We invite you to provide different views on options we propose, new approaches we have not considered, new data, how this document may affect you, or other relevant information. We welcome your views on all aspects of this document, but request comments on specific issues throughout this document. We grouped these specific requests near the end of the sections in which we discuss the relevant issues. Your comments will be most effective if you follow the suggestions below:

- Explain your views and reasoning as clearly as possible.
- Provide solid technical and cost data to support your views.
- If you estimate potential costs, explain how you arrived at the estimate.
- Tell us which parts of this document you support, as well as those with which you disagree.
- Provide specific examples to illustrate your concerns.
- Offer specific alternatives.
- Refer your comments to specific sections of this document, such as the units or page numbers of the preamble, or the regulatory sections.
- Be sure to include the name, date, and docket number with your comments.

B. How Do I Prepare and Submit Comments?

Your comments must be written and in English. To ensure that your comments are correctly filed in the Docket, please include the docket number of this document in your comments.

Your comments must not be more than 15 pages long. (49 CFR 553.21). We established this limit to encourage you to write your primary comments in a concise fashion. However, you may attach necessary additional documents to your comments. There is no limit on the length of the attachments.

Please submit two copies of your comments, including the attachments, to Docket Management at the address given above under **ADDRESSES.**

Comments may also be submitted to the docket electronically by logging onto the Dockets Management System website at http://dms.dot.gov. Click on ''Help & Information'' or ''Help/Info'' to obtain instructions for filing the document electronically.

C. How Can I Be Sure That My Comments Were Received?

If you wish Docket Management to notify you upon its receipt of your comments, enclose a self-addressed, stamped postcard in the envelope containing your comments. Upon receiving your comments, Docket Management will return the postcard by mail.

D. How Do I Submit Confidential Business Information?

If you wish to submit any information under a claim of confidentiality, you should submit three copies of your complete submission, including the information you claim to be confidential business information, to the Chief Counsel, NHTSA, at the address given above under **FOR FURTHER INFORMATION**

CONTACT. In addition, you should submit two copies, from which you have deleted the claimed confidential business information, to Docket Management at the address given above under **ADDRESSES**. When you send a comment containing information claimed to be confidential business information, you should include a cover letter setting forth the information specified in our confidential business information regulation. (49 CFR Part 512.)

E. Will the Agency Consider Late Comments?

We will consider all comments that Docket Management receives before the close of business on the comment closing date indicated above under **DATES**. To the extent possible, we will also consider comments that Docket Management receives after that date. If Docket Management receives a comment too late for us to consider it in developing a final rule (assuming that one is issued), we will consider that comment as an informal suggestion for future rulemaking action.

F. How Can I Read the Comments Submitted by Other People?

You may read the comments received by Docket Management at the address given above under **ADDRESSES**. The hours of the Docket are indicated above in the same location.

You may also see the comments on the Internet. To read the comments on the Internet, take the following steps:

(1) Go to the Docket Management System (DMS) Web page of the Department of Transportation (http://dms.dot.gov/).

(2) On that page, click on ''search.''

(3) On the next page *(http://dms.dot.gov/search/)*, type in the four-digit docket number shown at the beginning of this document. Example: If the docket number were ''NHTSA–1998–1234,'' you would type ''1234.'' After typing the docket number, click on ''search.''

(4) On the next page, which contains docket summary information for the docket you selected, click on the desired comments. You may download the comments. Although the comments are imaged documents, instead of word processing documents, the ''pdf'' versions of the documents are word searchable.

Please note that even after the comment closing date, we will continue to file relevant information in the Docket as it becomes available. Further, some people may submit late comments. Accordingly, we recommend that you periodically check the Docket for new material.

G. Plain Language

Executive Order 12866 and the President's memorandum of June 1, 1998, require each agency to write all rules in plain language. Application of the principles of plain language includes consideration of the following questions:

- Have we organized the material to suit the public's needs?
- Are the requirements in the rule clearly stated?
- Does the rule contain technical language or jargon that is not clear?
- Would a different format (grouping and order of sections, use of headings, paragraphing) make the rule easier to understand?
- Would more (but shorter) sections be better?
- Could we improve clarity by adding tables, lists, or diagrams?
- What else could we do to make the rule easier to understand?

If you have any responses to these questions, please include them in your comments on this document.

Issued on: May 24, 2000.

Stephen R. Kratzke,

Associate Administrator for Safety Performance Standards.

Appendix: Association Between SSF and Rollover Risk Estimated From Crash Data

A. Purpose of the Analysis

Our purpose is to describe the relationship between the Static Stability Factor (SSF) and the risk of rollover in single-vehicle crashes given the average mix of road use characteristics nationwide. We know that environmental, road, and driver factors affect rollover risk, and we suspect that vehicles with low SSFs may tend to be used differently than vehicles with high SSFs. (Another way to describe this is to say that SSF may be confounded with road use characteristics.) For example, some vehicles with a low SSF may tend to be used on curved roads or by young drivers, and these may be conditions that increase rollover risk. Therefore, our description of the association between the SSF and rollover risk will be no better than our ability to remove the confounding effects of differences in road use.

B. Data Availability

To compare the performance of different vehicle models, we need a large number of single-vehicle crashes. The National Automotive Sampling System (NASS) provides good data, but NASS is limited to towaway crashes and includes too few cases for this type of analysis. The Fatality Analysis Reporting System (FARS) includes a large number of cases, but the restriction to fatal crashes limits its use for comparisons of rollover propensity. The General Estimates System (GES) includes a large number of cases of all crash severities, and these data will be valuable when used in conjunction with the larger volume of cases available in the state crash files.

The agency routinely obtains crash files from seventeen states as part of its State Data System (SDS). We questioned whether a single state could represent the national experience (given state-to-state differences in road use and reporting practices), so we decided to use as many states as possible. This allowed us to compare the results among states and to combine the results to produce our best national estimate of the relationship between the SSF and rollover risk. Participants in the SDS include nine states that have the Vehicle Identification Number (VIN) on their crash files; we will call them the ''VIN states'' here. We need the VIN to completely and accurately describe the vehicle, and this is an essential part of our analysis. We eliminated three VIN states: Illinois (because we have not yet obtained the 1996 and 1997 data from this state) and New Mexico and Ohio (because we know that a rollover is recorded in these states only if the police identify it as the first harmful event in the crash). The 1994–1997 calendar year files for the other six VIN states in the SDS (Florida, Maryland, Missouri, North Carolina, Pennsylvania, and Utah) are the basis of our analysis. We used GES to verify and calibrate the results obtained from the six state files, but these six states include 26 times as many cases as GES alone.

C. Determination of the SSF

The main criterion for selecting the vehicles used in this analysis was the availability of a reasonable estimate of the SSF, and our goal was to include as many vehicle models as possible. We started with an existing compilation of all the SSF measurements made by the agency through 1998, but limited the study vehicles to model years 1988 and later. We added measurements provided by the General Motors Corporation (GM) for other vehicles, but we limited these additions to passenger cars and vans because the GM data did not distinguish between two- and four-wheel drive versions of pickup trucks and sport utility vehicles. We used data from vehicles tested with a single passenger when these were available, and from zero- or two-passenger loading when one-passenger loading was not available. A handful of SSF values were imputed, as in the following example: We assigned a late-generation four-wheel drive S-series Blazer (model years 1995 to 1998, for which we had no SSF measurement) the same SSF as the two-wheel drive version because there was no difference in the SSF between the two- and four-wheel drive versions in the earlier generation of that model (model years 1983 to 1994).

The result was a list of a hundred vehicle models (vehicle models tested by the agency, identified by GM, or imputed as described above). The list includes the following number of vehicle models for each of four light vehicle types: 36 cars, 30 sport utility vehicles, 13 vans, and 21 pickup trucks. The number of vehicle models in the study (a

hundred) is a nice round number, but this was not by design. Our goal was to include as many models as possible, and one hundred was the number that was possible.

D. Data Processing

We identified vehicles for which we had a SSF value (including corporate cousins of the tested vehicles) in the state and national crash files based on the VIN and with the help of the 1998 version of The Polk Company's PC VINA® software. The list of vehicle models used in the analysis is shown as Tables A–1 through A–4; note that some vehicle groups include more than one vehicle model because the tested vehicles had corporate cousins. We restricted the crash data to single-vehicle events, which we defined to exclude crashes with another motor vehicle in transport or with a nonmotorist (such as a pedestrian or pedalcyclist), animal, or train. We eliminated any vehicle without a driver and all vehicles that were parked, pulling a trailer, designed for certain special or emergency uses (ambulance, fire, police, or military), or on an emergency run at the time of the crash.

All the files we used include variables that describe the conditions of the road and driver, and these are useful for understanding the risk of rollover. A detailed review of the agency's GES and SDS documentation showed that the following information is available for most of the six states and for GES. The name of the variable created from this information is shown in capital letters, in parentheses:

(1) Did the vehicle roll over? (ROLL)

(2) Was it dark when the crash occurred? (DARK)

(3) Was the weather inclement? (STORM)

(4) Did the crash occur in a rural area? (RURAL)

(5) Was the speed limit 50 mph or greater? (FAST)

(6) Did the crash occur on a grade, dip, or summit? (HILL)

(7) Did the crash occur on a curve? (CURVE)

(8) Were there potholes or other bad road conditions? (BADROAD)

(9) Was the road wet or icy or have another bad surface condition? (BADSURF)

(10) Was the driver male? (MALE)

(11) Was the driver under 25 years old? (YOUNG)

(12) Was the driver uninsured? (NOINSURE)

(13) Was drinking or illegal drug use noted for the driver? (DRINK)

(14) How many occupants were in the vehicle? (NUMOCC)

For each state and GES, we calculated the following summary statistics for each of the hundred vehicle groups in the study:

(1) Number of single-vehicle crashes during these four years;

(2) Number of rollovers per single-vehicle crash;

(3) Involvement of the following per single-vehicle crash (as available on each file): DARK, STORM, RURAL, FAST, HILL, CURVE, BADROAD, BADSURF, MALE, YOUNG, NOINSURE, and DRINK; and

(4) Average number of occupants per vehicle in these crashes.

We used these summary-level data (summarized as counts and averages per vehicle group) as the basis for our analysis. Each summary record, representing a vehicle model group, is a data point in our linear regressions.

E. State-by-State Data Analysis

For each state, we limited the analysis to vehicle groups with at least 25 single-vehicle crashes. This threshold is somewhat arbitrary, but it is the one we used in an earlier analysis of single-vehicle crashes in state data.[21] There are two valuable results: (1) There is at least one rollover for each vehicle group included in the model, and (2) there is no vehicle group for which every single-vehicle crash resulted in a rollover. That is, the rollover rate is greater than zero and less than one for every vehicle group we included in the study. We could have had as many as 600 data points (six states, each with up to 100 vehicle groups) for this analysis. We actually had (because of the threshold for inclusion) 481 data points, which represent the experience of 184,726 single-vehicle crashes. A similar restriction on the GES data file produced 60 data points representing the experience of 7,022 vehicles. The number of vehicle groups available for our analysis and the total number of single-vehicle crashes represented by these groups are shown in the first two data rows of Table A–5.

The number of rollovers per single-vehicle crash varies by state (from a low of 0.127 for Missouri to a high of 0.363 for Utah). There are two major reasons for this variation: (1) Real differences among the states in road conditions, vehicles, and drivers, and (2) state-to-state reporting differences (and, in particular, the conventions for reporting nonrollover, nontowaway crashes). However, it is encouraging that the average number of rollovers per single-vehicle crash for the study vehicles was 0.198 for the six states combined, which is the same as the proportion estimated from GES for the same vehicles and time period.

We performed a number of stepwise linear regressions (using forward variable selection and a significance level of 0.15 for entry and removal from the model) on the individual states as preparation for an analysis of the six states combined. In each case, we modeled the natural logarithm of the number of rollovers per single-vehicle crash, LN(ROLL), as a function of a linear combination of the road, vehicle, and driver variables available in that state's crash file. We chose this transformation for three reasons: (1) A visual inspection of the data suggested that this form describes the relationship between rollover risk and the SSF better than a simple linear fit, (2) this form was consistent with our understanding of the process (we expected the biggest differences in the number of rollovers per single-vehicle crash to occur at relatively low values of the SSF, with diminishing effects for higher values of the SSF), and (3) this transformation has convenient mathematical properties. The form of the model implies that arithmetic changes in the SSF (for example, an additional 0.01 in the value) are associated with geometric changes in the number of rollovers per single-vehicle crash (about 3 percent fewer rollovers observed per single-vehicle crash for any 0.01 increase in the SSF, before accounting for differences in road use).

We ran stepwise regression models using the option that gives more weight to data points that are based on more observations, so vehicle groups with more crashes count for more in the analysis. Each data point was weighted by the number of single-vehicle crashes it represented, but the weighting was capped at 250. That is, data points based on more than 250 observations were weighted by 250. The weighting threshold is somewhat arbitrary, but it was chosen because it is 10 times the threshold for inclusion in the analysis. The rationale for weighting the data for the regression is that data points based on more observations are more reliable; the rationale for capping the weights is that at some point there are only marginal improvements in our estimates, and we want estimates that fit well over the entire range of the data (that is, for low-SSF and for high-SSF vehicles).

Florida can be used to illustrate our procedure. There are 85 vehicle groups available for our analysis, which represent the experiences of 34,521 vehicles in single-vehicle crashes during 1994-1997. There were 0.208 rollovers per single-vehicle crash in these data. A weighted linear regression of LN(ROLL) as a function of the SSF alone has an R-squared of 0.7074, which means that the SSF alone explains 71 percent of the variability in the data. This suggests that the SSF has great explanatory power for the number of rollovers per single-vehicle crash, but we are concerned that differences among vehicle groups in the mix of road use characteristics may be confounding the relationship. Therefore, we also used more-complex models that explicitly include these potentially confounding factors.

A weighted linear regression using a stepwise approach to include the best of the road use variables alone (that is, without the SSF) produced an equation with an R-squared of 0.5313. A second weighted linear regression using a stepwise approach to include the best of the road use variables plus the SSF produced an equation with an R-squared of 0.9041. The variability unexplained by the first model is:

$1 - 0.5313 = 0.4687$ (without the SSF),

and the variability unexplained by the second model is:

$1 - 0.9041 = 0.0959$ (with the SSF).

This means that 80 percent of the variability in the data remaining after the effects of the best of the road use variables are used is eliminated by allowing the SSF to enter the stepwise procedure. This is calculated as:

$(0.4687 - 0.0950)/0.4687 = 0.80.$

We consider 80 percent to be the value of the SSF in explaining the number of rollovers per single-vehicle crash.

We used the results of the model to adjust the observed number of rollovers per single-vehicle crash to account for differences among vehicle groups in their road use

[21] As described in our July 1991, Technical Assessment Paper: Relationship between Rollover and Vehicle Factors.

characteristics in single-vehicle crashes. For each data point, we used the regression results (the coefficients of the explanatory road use variables, FAST, CURVE, MALE, YOUNG, and DRINK) and the typical road use (the observed averages of these road use characteristics for the study vehicles as a group) to estimate what LN(ROLL) would have been if road use for that vehicle group had been the typical road use for all the vehicles in the Florida study. The approach is similar to that described in our July 1991 Technical Assessment Paper. The average adjusted number of rollovers per single-vehicle crash for all the study vehicles in Florida is, by design, 0.208 (that is, the same as the number estimated from the unadjusted data). The line through the adjusted data is described by:

$$LN(ROLL) = 3.1691 - 3.7935 \times SSF.$$

Exponentiating both sides of the equation produces an estimate that the number of rollovers per single-vehicle crash is approximated by the curve described by:

$$ROLL = 23.79 \times e^{(-3.7935 \times SSF)}.$$

This model form has very useful properties.

The equation can be used to estimate the number of rollovers per single-vehicle crash as a function of SSF alone, for the average mix of road use characteristics for the study vehicles in Florida during the years 1994–1997. For example, we can use the statistical model to identify the increase in the SSF that is associated with an estimate of half as many rollovers per single-vehicle crash. Note that our model has the same form as that used to describe radioactive decay as a function of time (with SSF used in place of time as the independent variable). Using the terminology and theory from the physical application, 3.7935 is the decay constant, and the half-life of the process is estimated as:

$$\text{Half-life} = LN(2)/(3.7935) = 0.18.$$

This means that the increase in the SSF that is associated with halving the number of rollovers per single-vehicle crash in Florida is estimated as 0.18. For example, the number of rollovers per single-vehicle crash under average conditions in Florida for the study vehicles as a group is estimated as:

0.40 for a SSF of 1.08
0.20 for a SSF of 1.26, and
0.10 for a SSF of 1.44.

Thus, rollover risk drops by a half when the SSF increases from 1.08 to 1.26, and it drops in half again when the SSF increases from 1.26 to 1.44.

F. Comparison of the State Results

The results for the six individual states and GES are shown in Table A–5. The value of the SSF in explaining rollovers per single-vehicle crash (measured as the decrease in unexplained variability when SSF is allowed to enter the stepwise regression) for the six states ranges from 64 percent for Utah to 80 percent for Florida; the value estimated from GES is 54 percent. The estimated increase in the SSF that is associated with halving the number of rollovers per single-vehicle crash is similar across the six states, ranging from 0.18 (Florida and Missouri) to 0.24 (Pennsylvania and Utah); the value estimated from GES is 0.18.

There are also similarities in which explanatory variables were chosen by the stepwise regression procedure. The best models for the states (the models that include SSF and those road use variables that are most useful in explaining the number of rollovers per single-vehicle crash in each state) include the following variables:

DARK: 2 states,
STORM: 1 state,
RURAL: 2 states (not available in 2 other states),
FAST: 5 states,
HILL: 2 states,
CURVE: 4 states,
BADROAD: 1 state (not available in 2 other states),
BADSURF: 1 state,
MALE: 6 states,
YOUNG: 5 states,
DRINK: 4 states, and
NUMOCC: 2 states (not available in 1 other state).

The similarities among the individual state models suggests that the six states can be combined to form a best estimate of the relationship between the SSF and the number of rollovers per single-vehicle crash if the differences among the states in road use and crash reporting can be addressed. We would not be surprised if a multi-state stepwise regression selected FAST, CURVE, MALE, YOUNG, and DRINK as explanatory variables because these factors are important in the individual state analyses. Note that combining the data from individual states is already done by FARS (a census of traffic fatalities in all states) and by GES (a survey of police-reported crashes in sampled states), and this combination is done without adjustment for differences in reporting practices. Our efforts to model the combined data from the six available VIN states are described below.

G. Combined Six-State Data Analysis

We performed a weighted stepwise linear regression analysis for the six states combined using the 481 data points that represent at least 25 single-vehicle crashes, with the weighting capped at 250. These 481 data points represent the experience of 184,726 single-vehicle crashes in the six-state combined data, including the following number of data points for each of four light vehicle types:

204 for cars,
124 for sport utility vehicles,
45 for vans, and
108 for pickup trucks.

The road use variables considered by the model were those that are available in all six states: DARK, STORM, FAST, HILL, CURVE, BADSURF, MALE, YOUNG, and DRINK.

We modeled LN(ROLL) as a function of these road use variables, and we created five dummy variables (DUMMY__FL, DUMMY__MD, DUMMY__NC, DUMMY__PA, and DUMMY__UT) to capture state-to-state differences. We needed dummy variables to combine the state data because the states have different reporting thresholds and practices, which produce different levels of rollovers per single-vehicle crash even after accounting for differences in road use. We chose Missouri as the baseline state for two reasons. First, Missouri has the lowest rollover rate (both before and after accounting for differences in road use), and this means that the coefficients of all the state dummy variables will be positive; this makes the results a little easier to describe, but it has no analytical implications. And second, there are significant differences between Missouri and each of the other five states in the number of rollovers per single-vehicle crash; this allows all five state dummy variables to enter the model and lets us measure the relative reporting effect of every state.

For example, the dummy variable DUMMY__FL was defined as ''one'' for each of the 85 Florida data points, and it was defined as ''zero'' for each of the 396 data point from the other five states. The coefficient of DUMMY__FL estimated by the regression analysis is interpreted as the incremental risk of rollover in Florida (compared to Missouri, the baseline state), after considering differences in road use. The other four dummy variables were handled analogously. All five dummy variables were defined as ''zero'' for all the Missouri data points.

The best model without SSF has an R-squared of 0.5753, and the best model with SSF has an R-squared of 0.8829. This means that allowing the SSF to enter the model explains 72 percent of the variation that was not explained by the model without SSF, and so we say that the value of the SSF to our model is 72 percent. The stepwise regression procedure with SSF chose three variables that describe the driving situation (DARK, FAST, and CURVE), three variables that describe the driver (MALE, YOUNG, and DRINK), and all five state dummy variables.

We used forward variable selection and a significance level of 0.15 for entry and removal from the model, but only one variable in the best model that included the SSF had a significance level greater than 0.0001 (DARK, at 0.0663). The F-statistic for the model as a whole was 294, and the probability of a value this high by chance alone is less than 0.0001. More details on the fit of the model are included as Table A–6.

The variables FAST, MALE, and YOUNG are unambiguous, and it seems likely that they are consistently reported by all six states (though there are some differences in the rates of missing data). The coding of DARK and CURVE may vary somewhat by state (states may differ in how they code twilight conditions, and states where most roads curve may tend to call a slightly-curved road ''straight''). The coding of DRINK probably differs among the states. The state dummy variables describe systematic differences between states, including differences in the reporting threshold.

We used the results of the model to adjust the observed number of rollovers per single-vehicle crash to account for differences among states and vehicle groups in their road use characteristics in single-vehicle crashes. For each data point, we used the regression results to calculate how many rollovers per single-vehicle crash we would have expected if road use for that vehicle group had been the typical road use for all the vehicles in the study. (The effects of the adjustments on

individual data points are sometimes large. For example, one pickup truck group had 0.46 rollovers per single-vehicle crash in Florida, in part because drivers of this vehicle in Florida tended to be young. If the vehicle had been driven like the average of all the vehicles in the study, we estimate that there would have been 0.35 rollovers per single-vehicle crash. This second number is what we are calling the ''adjusted'' rollover risk.)

The average adjusted number of rollovers per single-vehicle crash for all the study vehicles is, by design, 0.198 (that is, it is the number estimated from both the six-state data and GES). The fit of the curve through the adjusted data is described by:

Estimated rollovers per single-vehicle crash = $13.25 \times e^{(-3.7831 \times SSF)}$.

This is the curve determined from the observed number of rollovers per single-vehicle crash, the results of the weighted regression model, and with an average of 0.198 rollovers per single-vehicle crash for all the vehicles used in the study. Figure A–1 shows the adjusted value of the rollover risk for each vehicle group averaged over all six states and the curve that describes the pattern of rollover risk as a function of the SSF. Our national estimate of the number of rollovers per single-vehicle crash declines by half for any increase of 0.21 in the SSF.

H. Discussion

The observed relationship between the SSF and the number of rollovers per single-vehicle crash is confounded by (1) The relationship between the SSF and road use factors that directly affect the risk of rollover and (2) state-to-state differences in reporting practices, including the reporting threshold. We attempted to correct for these biases in order to isolate the effect of the SSF on rollover risk, and the curve through the adjusted data is our best estimate of the relationship between the SSF and the risk of rollover. The fit of the model (an R-squared of 0.88), the significance of the SSF in the model (the probability of a greater value of the t statistic is less than 0.0001), the value of the SSF in this model (a 72 percent reduction in the R-squared compared to the best model without the SSF), and the implications from the model (rollovers decrease by half for any increase of 0.21 in the SSF) suggest a strong relationship between the SSF and rollover risk. However, this (in common with all statistical models) is a simplification of a complex process.

There are important factors that were not included in the model because they are not available on the state data files. Some of the unmeasured factors that may influence rollover risk include driver skill (including attitudes, habits, and experience) and after-market changes to the vehicle's SSF (including those caused by differences in tire inflation, vehicle loading, and wheel size). None of these factors was explicitly included in the analysis, but some of them may be included through their association with other, measured variables. For example, differences in driver skill as a function of vehicle group are captured to the extent that driver skill is a function of age (as measured by YOUNG).

Statistical models are a method for dealing with uncertainty. The results can suggest an underlying process, but they do not (except in the most trivial cases) produce deterministic predictions. For example, Figure A–1 shows some scatter around the fitted curve. This may reflect omitted variables, the effect of having only a few vehicle groups at each level of the SSF, or the effects of natural statistical variability (reflecting, in part, sample size limitations). We can put this unexplained variability in perspective, and we will use Florida for illustrative purposes.

Figure A–2 shows the Florida data adjusted to the typical road use for all vehicles in the study. (The amount of scatter in the Florida data appears similar to that for the average of the six states shown in Figure A–1.) The natural variability in the data is suggested by how much the rollover risk for a single vehicle group varies from year-to-year. Figure A–3 shows the number of rollovers per single-vehicle crash (calculated directly from the Florida data, without any adjustments for confounding factors) for each vehicle group for two calendar year groups: 1994–1995 versus 1996–1997. For this purpose, the data were limited to vehicle groups that had at least 25 single-vehicles crashes in both time periods. The line fit to these data (weighting each vehicle group by the number of single-vehicle crashes in Florida during these four years, with the weighting capped at 250) has an R-squared of 0.89 and the equation:

Rollover risk in 1996–1997 = 0.0111 + 0.946 × Rollover risk in 1994–1995.

That is, our model of rollover risk as a function of SSF across vehicle groups seems to fit the data about as well as a model of year-to-year changes for each vehicle group, which seems like a reasonably good fit for such a complex process.

TABLE A–1.—THE SSF FOR PASSENGER CARS

Vehicle group	Make/model	Model years	SSF
1	Dodge Neon, Plymouth Neon	95–98	1.44
2	Ford Crown Victoria	92–97	1.42
3	Ford Escort	91–96	1.38
4	Ford Escort, Mercury Tracer	97–98	1.37
5	Ford Mustang	88–93	1.38
6	Ford Probe	93–97	1.41
7	Ford Taurus, Mercury Sable	88–95	1.45
8	Lincoln Town Car	90–96	1.44
9	Buick Century, Chevrolet Celebrity, Oldsmobile Cutlass Ciera/Ciera, Pontiac 6000	88–96	1.38
10	Buick Regal, Pontiac Grand Prix	88–96	1.41
11	Chevrolet Lumina	95–98	1.34
12	Buick Lesabre, Pontiac Bonneville	92–96	1.39
13	Buick Park Avenue, Oldsmobile 98	91–96	1.38
14	Buick Skylark/Somerset, Oldsmobile Cutlass Calais/Calais, Pontiac Grand Am	88–91	1.35
15	Buick Skylark, Oldsmobile Achieva, Pontiac Grand Am	92–97	1.38
16	Chevrolet Camaro, Pontiac Firebird	88–92	1.53
17	Chevrolet Camaro, Pontiac Firebird	93–98	1.50
18	Buick Roadmaster, Chevrolet Caprice	91–96	1.40
19	Buick Skyhawk, Chevrolet Cavalier, Pontiac Sunbird	88–94	1.32
20	Chevrolet Corsica	88–96	1.30
21	Chevrolet Geo Metro, Suzuki Swift	89–94	1.32
22	Chevrolet Geo Metro, Suzuki Swift	95–98	1.29
23	Saturn SL	90–95	1.39
24	Saturn SL	96–98	1.35
25	Chevrolet Geo Prizm	89–92	1.38
26	Honda Civic	92–95	1.48
27	Honda Civic	96–98	1.43
28	Honda Accord	90–93	1.47
29	Mazda Protege	95–98	1.40
30	Nissan Maxima	89–94	1.44

TABLE A–1.—THE SSF FOR PASSENGER CARS—Continued

Vehicle group	Make/model	Model years	SSF
31	Nissan Sentra	91–94	1.46
32	Nissan Sentra	95–98	1.40
33	Toyota Camry	92–96	1.46
34	Toyota Corolla	89–92	1.36
35	Toyota Tercel	91–94	1.41
36	Toyota Tercel	95–98	1.39

TABLE A–2.—THE SSF FOR SUVS

Vehicle group	Make/model	Model years	Drive wheels	SSF
37	Dodge Ramcharger	88–93	4	1.13
38	Ford Bronco	88–96	4	1.13
39	Ford Bronco II	88–90	2	1.04
40	Ford Bronco II	88–90	4	1.04
41	Ford Explorer	91–94	2	1.07
42	Ford Explorer	91–94	4	1.08
43	Ford Explorer	95–98	2	1.06
44	Ford Explorer	95–98	4	1.06
45	Chevrolet S–10 Blazer, GMC S–1500 Jimmy	88–94	2	1.10
46	Chevrolet S–10 Blazer, GMC S–1500 Jimmy	88–94	4	1.10
47	Chevrolet Blazer, GMC Jimmy	95–98	2a1.09	
48	Chevrolet Blazer, GMC Jimmy	95–98	4	1.09
49	Chevrolet V10/K10/K1500 Blazer	88–91	4	1.09
50	Chevrolet K1500 Blazer/Tahoe, GMC Yukon	92–98	4	1.12
51	Chevrolet V1500/V2500 Suburban, GMC V1500/V2500 Suburban	88–91	4	1.10
52	Chevrolet K1500/K2500 Suburban, GMC K1500/K2500 Suburban	92–98	4	1.08
53	Chevrolet Geo Tracker, Suzuki Sidekick	89–98	4	1.13
54	Honda CR–V	97–98	4	1.19
55	Honda Passport, Isuzu Rodeo	91–97	4	1.06
56	Isuzu Trooper	88–91	4	1.02
57	Isuzu Trooper	92–94	4	1.07
58	Jeep Cherokee	88–97	4	1.08
59	Acura SLX, Isuzu Trooper	95–98	4	1.09
60	Jeep Grand Cherokee	93–98	4	1.07
61	Jeep Wrangler	88–96	4	1.20
62	Nissan Pathfinder	88–95	4	1.07
63	Nissan Pathfinder	96–98	4	1.10
64	Suzuki Samurai	88–95	4	1.09
65	Toyota 4Runner	88–96	4	1.00
66	Toyota 4Runner	97–98	4	1.06

TABLE A–3.—THE SSF FOR VANS

Vehicle group	Make/Model	Model years	Drive wheels	SSF
67	Dodge Caravan/Grand Caravan, Plymouth Voyager/Grand Voyager	88–95	2	1.21
68	Chrysler Town & Country, Dodge Caravan/Grand Caravan, Plymouth Voyager/Grand Voyager	96–98	2	1.23
69	Dodge B–150 Ram Wagon	88–98	2	1.09
70	Ford Aerostar	88–98	2	1.10
71	Ford E–150 Clubwagon	88–91	2	1.11
72	Ford E–150 Clubwagon	92–97	2	1.11
73	Ford Windstar	95–98	2	1.24
74	Chevrolet Astro, GMC Safari	88–98	2	1.12
75	Chevrolet Lumina APV, Oldsmobile Silhouette, Pontiac Transport	90–96	2	1.12
76	Chevrolet Venture, Oldsmobile Silhouette, Pontiac Transport	97–98	2	1.18

TABLE A–3.—THE SSF FOR VANS—Continued

Vehicle group	Make/Model	Model years	Drive wheels	SSF
77	Chevrolet G10/G20 Sportsvan, GMC G1500/G2500 Rally van	88–95	2	1.08
78	Mazda MPV	89–97	2	1.17
79	Toyota Previa	91–97	2	1.23

TABLE A–4.—THE SSF FOR PICKUP TRUCKS

Vehicle group	Make/model	Model years	Drive wheels	SSF
80	Dodge Dakota	97–98	2	1.25
81	Dodge Ram 1500	94–98	2	1.22
82	Dodge D–150 Ram	88–93	2	1.28
83	Ford F–150	88–96	2	1.19
84	Ford F–150	88–96	4	1.15
85	Ford F–150	97–98	2	1.18
86	Ford Ranger	88–92	2	1.13
87	Ford Ranger	88–92	4	1.03
88	Ford Ranger, Mazda B-series	93–97	2	1.17
89	Ford Ranger, Mazda B-series	93–97	4	1.07
90	Chevrolet C–1500, GMC C–1500/Sierra	88–98	2	1.22
91	Chevrolet K–1500, GMC K–1500/Sierra	88–98	4	1.14
92	Chevrolet S–10, GMC S–15/Sonoma	88–93	2	1.19
93	Chevrolet S–10, GMC S–15/Sonoma	88–93	4	1.19
94	Chevrolet S–10, GMC S–15/Sonoma, Isuzu Hombre	94–98	2	1.14
95	Chevrolet S–10, GMC S–15/Sonoma	94–98	4	1.14
96	Nissan Pickup	88–97	2	1.20
97	Nissan Pickup	88–97	4	1.11
98	Toyota Pickup	89–94	2	1.23
99	Toyota Pickup	89–94	4	1.07
100	Toyota Tacoma	95–98	2	1.26

TABLE A–5.—ROLLOVERS PER SINGLE-VEHICLE (SV) CRASH AS A FUNCTION OF THE SSF AND ROAD USE VARIABLES

	FL	MD	MO	NC	PA	UT	Six states	GES
Vehicle groups for study	85	81	82	86	86	61	481	60
Single-vehicle crashes	34,521	17,683	31,517	45,440	48,519	7,046	184,726	7,022
Rollovers per SV crash	0.208	0.159	0.127	0.177	0.246	0.363	0.198	0.198
R-squared for models of LN (ROLL) with:								
SSF only	0.7074	0.6072	0.7266	0.5304	0.7281	0.7606	0.5386	0.4456
SSF and state	.....	.....	.....	.....	.....	.....	0.7334	.....
Road use only	0.5313	0.6550	0.5520	0.5479	0.6878	0.5461	.....	0.4147
Road use and state	.....	.....	.....	.....	.....	.....	0.5753	.....
SSF plus road use	0.9041	0.8818	0.8559	0.8945	0.8879	0.8548	.....	0.7332
SSF, road use, and state	.....	.....	.....	.....	.....	.....	0.8829	.....
Value of SSF	80%	66%	68%	77%	64%	68%	72%	54%
Best model of ROLL:								
Intercept	23.79	8.28	15.15	13.53	8.33	11.39	13.25	5.84
Coefficient of SSF	−3.7935	−3.1414	−3.8627	−3.4328	−2.8494	−2.8784	−3.3731	−2.6943
Standard error of coefficient of SSF	0.1729	0.2552	0.2141	0.1798	0.1488	0.2391	0.0761	0.3192
Increase in SSF to halve rollovers per SV crash	0.18	0.22	0.18	0.20	0.24	0.24	0.21	0.18

TABLE A–6.—FIT OF THE MODEL OF ROLLOVERS PER SINGLE-VEHICLE CRASH AS A FUNCTION OF THE SSF AND ROAD USE VARIABLES

[R-square=0.88290867 C(p)=10.21256387]

	DF	Sum of squares	Mean square	F	Prob>F
Regression	12	27480.16301362	2290.01358447	294.07	0.0001
Error	468	3644.41878744	7.78721963		
Total	480	31124.58180106			

Variable	Parameter estimate	Standard error	Type II—Sum of squares	F	Prob>F
INTERCEP	0.98462872	0.19748866	193.57224437	24.86	0.0001
SSF	−3.37314841	0.07612591	15289.32722322	1963.39	0.0001

Variable	Parameter estimate	Standard error	Type II—Sum of squares	F	Prob>F
DARK	−0.38680987	0.21016386	26.37918835	3.39	0.0663
FAST	1.52493695	0.19916920	456.50110043	58.62	0.0001
CURVE	1.55970317	0.25046223	301.98254463	38.78	0.0001
MALE	−1.33399065	0.10621334	1228.37181405	157.74	0.0001
YOUNG	0.86034711	0.09977145	579.05158823	74.36	0.0001
DRINK	1.73507462	0.27938756	300.33406907	38.57	0.0001
DUMMY_FL	1.17092992	0.07322547	1991.22295614	255.70	0.0001
DUMMY_MD	0.64541483	0.09276482	376.95864460	48.41	0.0001
DUMMY_NC	0.50232907	0.03749136	1397.96646995	179.52	0.0001
DUMMY_PA	1.17247270	0.06537935	2504.41755183	321.61	0.0001
DUMMY_UT	0.83176783	0.05431222	1826.38170253	234.54	0.0001

Figure A-1:
Rollovers per Single-Vehicle Crash Estimated from Six States
(Averages Across States for Each Vehicle Group)

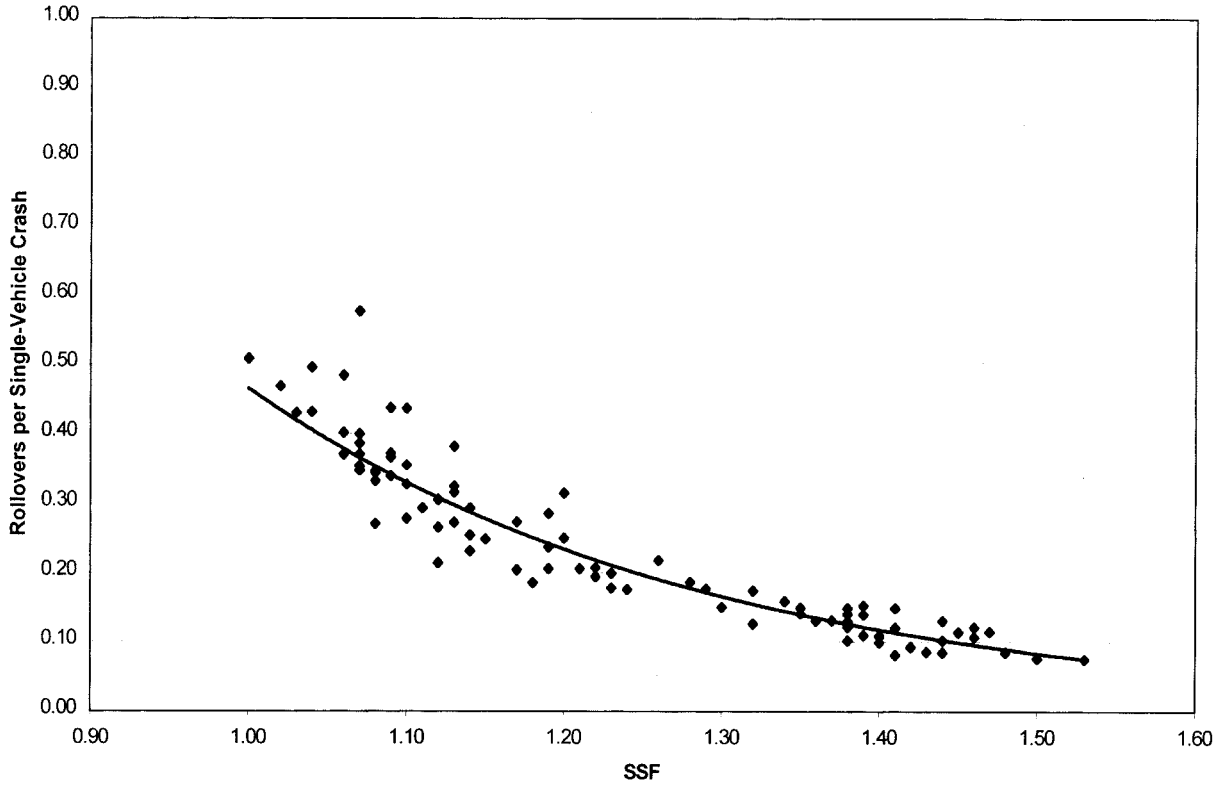

Figure A-2:
Rollovers per Single-Vehicle Crash in Florida
(Estimated from an Adjustment Developed from Six States)

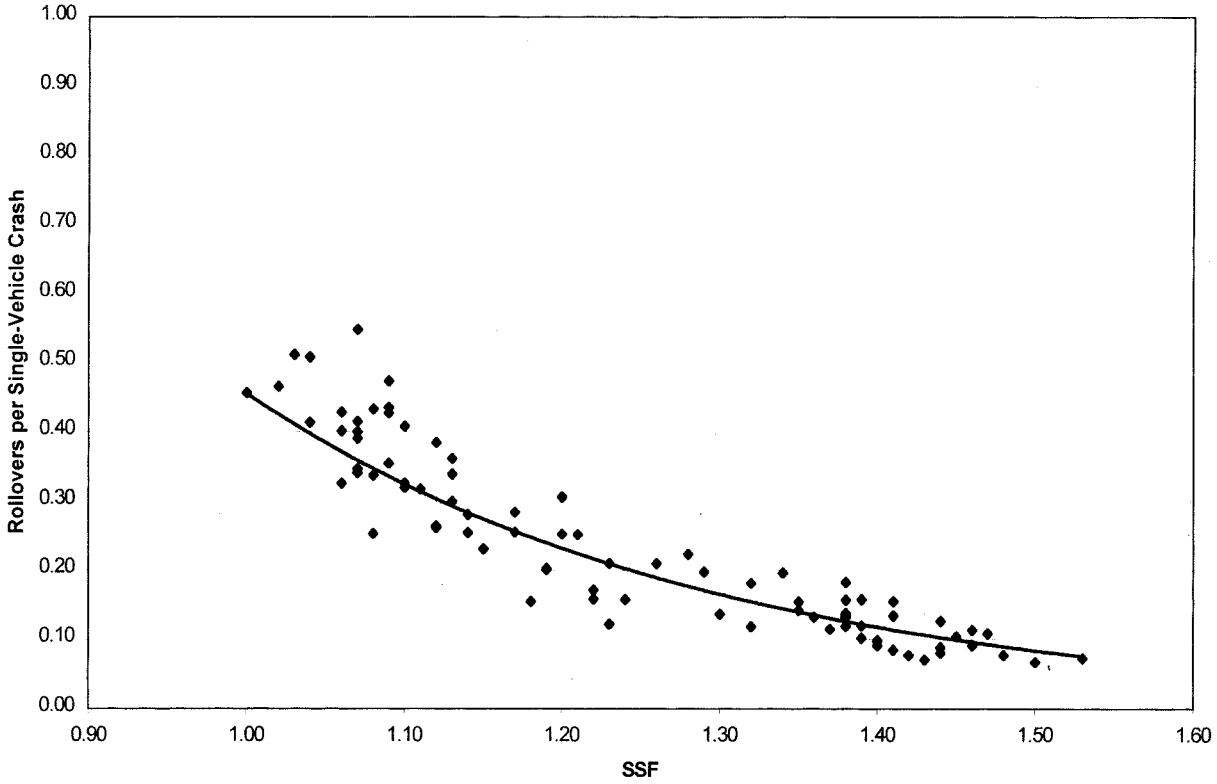

Figure A-3:
Rollovers per Single-Vehicle Crash in Florida
(Comparison for Each Vehicle Group in Two Time Periods)

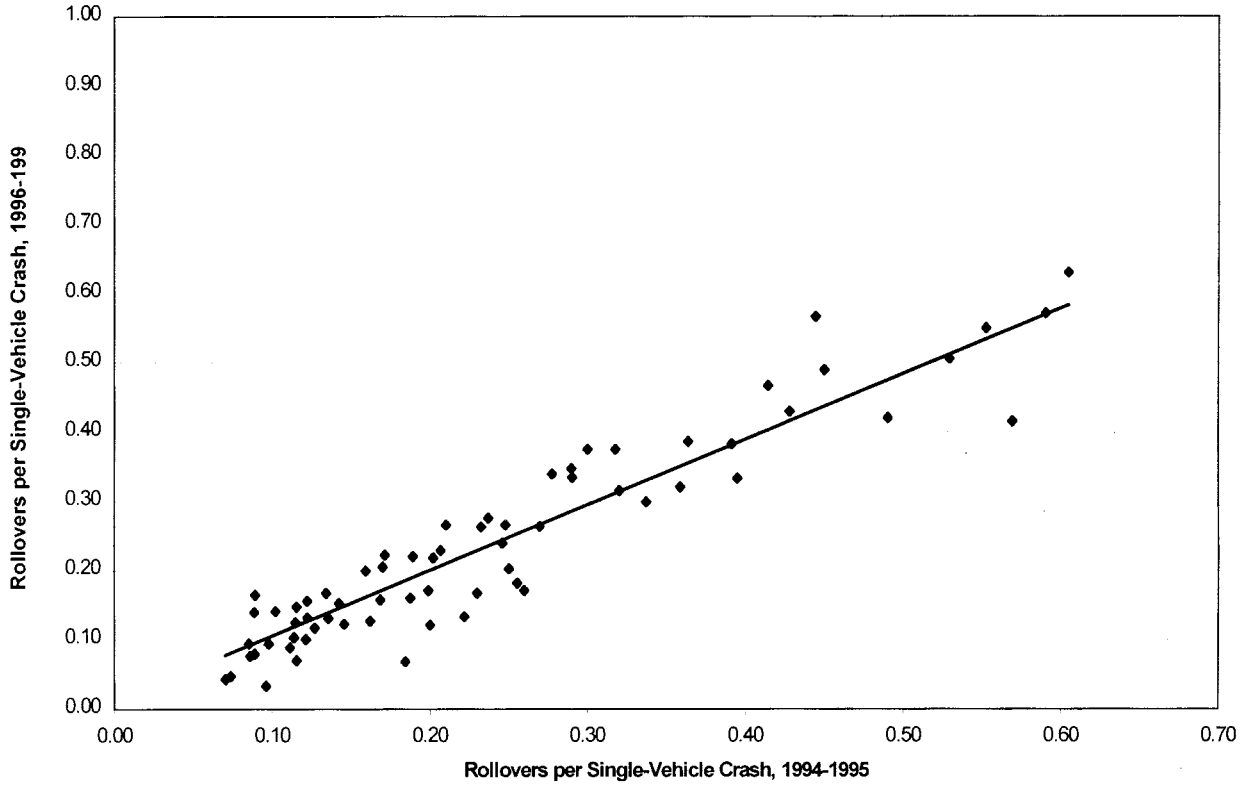

[FR Doc. 00–13443 Filed 5–25–00; 3:01 pm]
BILLING CODE 4910–59–C

DEPARTMENT OF THE INTERIOR

Fish and Wildlife Service

50 CFR Part 17

RIN 1018–AG09

Endangered and Threatened Wildlife and Plants; Proposed Endangered Status for Three Plants From the Mariana Islands and Guam

AGENCY: Fish and Wildlife Service, Interior.

ACTION: Proposed rule.

SUMMARY: We, the U.S. Fish and Wildlife Service (Service), propose endangered status pursuant to the Endangered Species Act of 1973, as amended (Act), for three plants (no common names): *Nesogenes rotensis, Osmoxylon mariannense,* and *Tabernaemontana rotensis. Nesogenes rotensis* and *O. mariannense* are found only on the island of Rota in the U.S. Commonwealth of the Northern Mariana Islands (CNMI). *Tabernaemontana rotensis* occurs on both Rota and the United States Territory of Guam. The three plant species and their habitats have been affected or are now threatened by one or more of the following: habitat degradation or destruction by feral deer and pigs; competition for space, light, water, and nutrients with introduced vegetation; road construction and maintenance activities; recreational activities; natural disasters or random environmental events; fire; vandalism; development of agricultural homesteads; resorts and golf courses; limited reproductive vigor; and potential insect, mouse, or rat predation. This proposal, if made final, would implement the Federal protection and recovery provisions of the Act.

DATES: Comments from all interested parties must be received by July 31, 2000. Public hearing requests must be received by July 17, 2000.

ADDRESSES: If you wish to comment, you may submit your comments and materials concerning this proposal by any one of several methods.

(1) You may submit written comments to the Field Supervisor, U.S. Fish and Wildlife Service, Pacific Islands Office, 300 Ala Moana Boulevard, Room 3–122, P.O. Box 50088, Honolulu, Hawaii 96850;

(2) You may send comments by e-mail to 3mplants__pr@fws.gov (see **SUPPLEMENTARY INFORMATION** for file formats and other information about electronic filing); or

(3) You may hand-deliver comments to our Pacific Islands Office, 300 Ala Moana Boulevard, Room 3–122, Honolulu, Hawaii 96850.

Comments and materials received, as well as supporting documentation used in the preparation of this proposed rule, will be available for public inspection, by appointment, during normal business hours at the above address.

FOR FURTHER INFORMATION CONTACT: Paul Henson, Field Supervisor, at the above address (telephone 808–541–3441; facsimile 808–541–3470).

SUPPLEMENTARY INFORMATION:

Background

Nesogenes rotensis, Osmoxylon mariannense, and *Tabernaemontana rotensis* occur on the island of Rota in the United States Commonwealth of Northern Mariana Islands (CNMI). *Tabernaemontana rotensis* also occurs in the United States Territory of Guam.

The island of Rota (lat. 14 degrees 01 minutes, long. 145 degrees) is located approximately 134 kilometers (km) (80 miles (mi)) northwest of the Territory of Guam. In general, the islands are raised limestone terraces on extinct volcanic peaks and slopes, with limited areas of volcanic soils protruding through limestone. Rota, 86 square kilometers (sq km) (33 square miles (sq mi)), is significantly smaller in area than Guam, which is approximately 500 sq km (200 sq mi), although both islands have similar maximum elevation of 490 meters (m) (1,612 feet (ft)) and 406 m (1,167 ft) above sea level, respectively.

The climate on Rota and Guam is tropical marine with high humidity and uniform temperatures throughout the year. Average daytime temperatures are approximately 26.4° Celsius (80° Fahrenheit) with approximately 200 centimeters (cm) (80 inches (in)) of rainfall and about 80 percent humidity. Rainfall averages 26.8 cm (10.7 in) per month during the wet season and 9.5 cm (3.8 in) per month during the dry season (Resources Northwest 1997). The dry season generally occurs from January to June, and trade winds of 24 to 40 km (15 to 25 mi) per hour from the east and northeast are common. The trade winds degenerate during the rainy season, which generally occurs from July to December. During this period, westward moving storms develop along and above the equator in an area known as the Intertropical Convergence Zone. These storms occasionally reach typhoon strength and can cause extensive damage to crops, homes, community infrastructure, and island forests (Resources Northwest 1997).

The vegetation of Rota and Guam falls into four general classes: forest, secondary vegetation, agroforest, and nonforest areas (Falanruw *et al.* 1989). The forest class includes five primary types: native limestone forest, introduced trees, mangrove (*Rhizophora* spp.) forest, ironwood (*Casuarina* sp.) forest, and atoll forest (Falanruw *et al.* 1989). Historically, native limestone forest varied from semidry forest to more or less dry-season deciduous forests on the lower terraces to wet cloud forest on the highest terraces. *Osmoxylon mariannense* occurs in the cloud forest on the highest terrace, or sabana, of Rota. *Tabernaemontana rotensis* occurs in or on the edges of the drier semideciduous limestone forests. *Nesogenes rotensis* occurs along the lowest terrace or coastal plain in strand vegetation on open limestone sea cliffs. Much of the original native forests on Rota and Guam was cleared for agriculture and timber harvest or by military activities, including bombing during World War II (Fosberg 1960). However, both Rota and Guam have extensive secondary native forests of medium stature that have regrown since the peak disturbance period associated with Japanese and American occupation of the islands during World War II. These forests, however, have subsequently been degraded by agricultural practices, logging, and development (Fosberg 1960).

These three plant species occur on private land, land owned by the CNMI (public park area), and Federal land (Andersen Air Force Base).

Discussion of the Three Plant Species

Nesogenes Rotensis

The type collection of *Nesogenes rotensis*, collected on April 23, 1982, by Derral Herbst and Marjorie Falanruw, was from Haaniya Point (Pona Point Fishing Cliff), Palie area, on the island of Rota, growing on exposed, dry raised limestone, at 100 m (328 ft) elevation (Fosberg and Herbst 1983). It was growing in association with *Scaevola sericea* (nanaso), *Terminalia samoensis* (talisai ganu), *Hedyotis strigulosa* (paodedo), *Pogonatherum paniceum,* and *Bikkia tetrandra* (gausali). Fosberg and Herbst (1983) formally described and published the name *Nesogenes rotensis* and placed it in the family Chloanthaceae, a largely Australian family. This placement was a change from the historic placement of the genus in the family Verbenaceae and its subsequent placement in its own family, Nesogenaceae. Presently, Mabberly (1990) recognizes *Nesogenes* as a genus of Verbenaceae, but states that it may simply be a matter of preference as to how to treat the genus *Nesogenes*.

Nesogenes rotensis is an herbaceous plant with small, opposite, broadly lanceolate, coarsely toothed leaves. Flowers are axillary and tubular, with five white petals; often a flowering branch grows upright, which might aid in pollination or seed dispersal (Raulerson and Rinehart 1997). Each plant typically branches near the base at about five to seven nodes, and is subprostrate to ascending, scrambling over appressed shrubs, with whole plants up to almost 1 m (3 ft) in diameter (Fosberg and Herbst 1983).

One population of fewer than 100 plants was reported in 1982 by Derral Herbst at the Pona Point Fishing Cliff, public park land owned by the CNMI (under jurisdiction of the CNMI Department of Land and Natural Resources (DLNR)) and the site of the only known population (Loyal Mehrhoff, Service, pers. comm. 1993). In 1994, Raulerson and Rinehart (1997) reported a population of about 20 plants, occupying 200 sq m (240 sq yards (yd)) of habitat, at the Pona Point Fishing Cliff. Apparently, this was the same population as was reported by Herbst in 1983; Herbst was uncertain of the original location when he made the herbarium sheet (D. Herbst, Bishop Museum, pers. comm. 1997).

Based on information from collections, *Nesogenes rotensis* flowered April 23, 1982 (Herbst and Falanruw 6739), and was fruiting and flowering in November 1994 (Raulerson 26222). In January (Dan Grout, Service, pers. comm. 1997) and February 1997 (Christa Russell, Service, *in litt.* 1997), no plants were found at this site. In January 1998, approximately 30 plants were observed in seed, but not in flower (Guy Hughes, Service, pers. comm. 1998). There were several volunteer seedlings near the larger plants, and the entire population was scattered over an area of approximately 200 sq m (240 sq yd). Many of the larger individuals were senescent, with many dried branches and only a few green leaves on one or a few of the branches. The dried branches were lined with cuplike structures that contained seeds. All the available information and recent observations suggest that these plants are perennials, but their above-ground parts die back annually.

The only known population of this species occurs in an area that has increasingly been overutilized by people. Because of activities, such as collecting, trampling by fishermen and tourists, or expansion of the park's facilities, human activities has become the primary threat to the species. The nonnative *Casuarina equisetifolia* (ironwood) is presently colonizing the Pona Point Fishing Cliff area and also represents a major threat to *N. rotensis*. *Casuarina equisetifolia* is a large, fast-growing tree that reaches up to 20 m (65 ft) in height (Wagner *et al.* 1990). It forms monotypic stands, shades out other plants, takes up much of the available nutrients, and possibly releases a chemical agent that prevents other plants from growing beneath it (Neal 1965, Smith 1985). In addition, given the limited distribution of *N. rotensis*, random environmental events, such as typhoons, storm surges, and high surf, also threaten the one remaining population.

Osmoxylon Mariannense

Osmoxylon mariannense was first collected on Rota by French naturalist Alfred Marche, an active botanical explorer in the Mariana Islands from 1887–1889 (Stone 1970). It was not until 1933, when a study of Marche's collection was made, that Kanehira first described the species as *Boerlagiodendron mariannense* (Kanehira 1933). In 1980, Fosberg and Sachet (1980) published the currently accepted recombination, *Osmoxylon mariannense,* which has been upheld by Raulerson and Rinehart (1991). *Osmoxylon mariannense,* endemic to Rota, is a spindly, soft-wooded tree in the Ginseng family (Araliaceae), which can reach 10 m (33 ft) in height. It has several ascending, gray-barked branches that bear conspicuous leaf scars. Leaves vary in size; mature leaves are palmately lobed and about 30 cm (1 ft) long and 50 cm (1.7 ft) wide. The seven to nine lobes are coarsely toothed, and each lobe has a conspicuous, depressed mid-vein. The leaves are alternate, or whorled, at branch tips; the petioles are 35–40 cm (1–1.5 ft) long and based in distinctive, conspicuous green multiple ''sockets'' (Raulerson and Rinehart 1991).

Historically, *Osmoxylon mariannense* occurred in dense primary forest at about 400 m (1,320 ft) elevation (Kanehira 1933). Reports from 1980 to 1995 indicate that approximately 20 individuals from one scattered population were in the same vicinity as reported by Kanehira (Lynn Raulerson, University of Guam, pers. comm. 1998; D. Grout and L. Mehrhoff, pers. comms. 1997). Currently, all known individuals of this species occur in small subpopulations along a simple system of unimproved roads crossing the top of the sabana (highest elevation terraces) of Rota. One of the larger subpopulations had approximately nine individuals in 1994, but typhoons appeared to have damaged many of the trees, and only two were visible in 1997 (Raulerson and Rinehart 1997).

Osmoxylon mariannense can be found on both private (approximately 2 individuals) and publicly owned (CNMI) (approximately 18 individuals) land in limestone forests. It occurs as an understory species in *Pisonia umbellifera* and *Hernandia labyrinthica* forests, and is often hard to see until some trunks are tall enough to mingle with the trunks of the other two species (Raulerson and Rinehart 1997). In January 1998, shortly after typhoon Paka, five of the subpopulations, containing a total of eight trees, were located along the sabana road (Estanislau Taisacan, CNMI, Division of Fish and Wildlife (DFW) and G. Hughes, pers. comms. 1998). The plants in each subpopulation were completely defoliated and damaged by the high typhoon winds. E. Taisacan [supported by Raulerson and Rinehart (1997)] indicated that the total population of *Osmoxylon mariannense* had significantly declined in the past 10 years (G. Hughes, pers. comm. 1998). Ten years before, many of the subpopulations visited in 1998 had several trees each (E. Taisacan, pers. comm. 1998). Almost all of these subpopulations have now been reduced to a single tree, and none of these trees are reproducing naturally (G. Hughes, pers. comm. 1998).

Due to several exacerbating factors, the primary threat to *Osmoxylon mariannense* is the lack of regeneration in disturbed forests. Although Rota has historically experienced typhoon disturbances, intense typhoons and super typhoons have occurred with high frequency in the past 10 years. These repeated storms have considerably opened the canopy of the sabana forest, creating conditions favored by invasive alien plants and vines and perhaps prohibiting the regeneration of *O. mariannense* (L. Mehrhoff, *in. litt.* 1995). For example, during the 1998 site visit, Taisacan indicated the once many-branched, 10 m (33 ft) high tree appearing in the photograph in Raulerson and Rinehart's (1991) *Guide to the Trees and Shrubs of the Mariana Islands*, had been reduced to a small stump 2 m (6.5 ft) high with scandent leaves after a decade of exposure to frequent typhoons (G. Hughes, pers. comm. 1998). Feral pigs (*Sus scrofa*) and deer (*Cervus mariannus*) occur on Rota, and their browsing and trampling are a potential threat to unfenced individuals (G. Hughes, pers. comm. 1998). Insect, mouse (*Mus musculus*), or rat (*Rattus* spp.) predation of seeds on the ground is a suspected cause of the lack of reproductive vigor exhibited by this

species. Since several individuals occur close to roadways, bulldozers could destroy plants during routine maintenance or road improvement. Finally, the identification of rare species through management activities such as fencing and signage may result in vandalism from individuals who perceive rare species as threats to development (Raulerson and Rinehart 1997).

Tabernaemontana Rotensis

Kanehira (1936) first described the species as *Ervatamia rotensis* from his type collection from Rota (Kanehira 3666). Stone (1965, 1970) recognized the species from the Rota and Guam collections (Stone 5256, Kanehira 3666, Hosokawa 9832) as *Tabernaemontana rotensis*. Leeuwenburg (1991) examined 1,400 specimens and adopted a very broad species concept when he lumped 52 species (including *T. rotensis*), ranging from China, Taiwan, Thailand, Java, Sabah, Australia, and Micronesia, into a single species, *T. pandacaqui*. However, Forster (1992) challenged Leeuwenberg's broad species concept for *Tabernaemontana* species in Australia. Forster's research led to the conclusion that there are two species in Australia, *T. orientalis* and *T. pandacaqui*. Based on Forster's analysis, Derral Herbst, Bishop Museum, speculated that Leeuwenberg's broad concept of lumping all *Tabernaemontana* species into one species is not valid (D. Herbst, pers. comm. 2000). This concept of combining species, which occur both on the Asian mainland and scattered, isolated islands covering a very wide geographic range, was also rejected by Dr. Fosberg of the Smithsonian Institution (L. Raulerson, pers. comm. 1997). In addition, no genetic investigations have been published that would support Leeuwenberg's conclusion. Therefore, although the taxonomy of this species is still in dispute, we have determined that we have sufficient information to consider *T. rotensis* as a species in its own right.

Tabernaemontana rotensis is a small tree in the Dogbane family (Apocynaceae). It grows to heights of perhaps 6 m (20 ft) and is rather weak and spindly in appearance, with large, yellow-green to dark-green leaves and thin, milky sap. The inflorescence consists of a few to over 30 flowers with 5 spirally arranged, united white petals that appear slightly folded until they flare at the tips. The fruits occur singly or twinned and have one to three ridges. Each fruit is relatively small, 3 to 7 cm (1.2 to 2.8 in) long, dehiscent (they open at maturity), and contains 4 to 10 seeds in a red pulp. Herbarium specimens show flowering in Guam plants has occurred in January, May, and July; specimens collected on Rota were in flower in October and November.

Historically, *Tabernaemontana rotensis* was known from lowland dry forest on Rota, where Kanehira (1936) described it as ''very abundant in the northern side of the island, but not found elsewhere.'' On Guam, *T. rotensis* was known from individual specimens in the limestone forests along clifflines at Asanite, on the University of Guam campus, and at the ''Japanese Overlook'' of the Naval Magazine (Raulerson and Rinehart 1997). While the tree at the University of Guam may possibly still exist, it has not recently been surveyed. However, the tree at the Naval Magazine was destroyed in a typhoon when other trees fell on it, and the tree at the Asanite cliffs was not found during a recent survey (Raulerson and Rinehart 1997).

Currently, there is one scattered population of *Tabernaemontana rotensis* on Rota, consisting of two individuals. One of the trees occurs in the Mochong area on CNMI land, and the other individual occurs in the Chenchon area on private land. Both individuals are located close to roads. In January 1998, both individuals were observed to be healthy and in flower, but it is not known if these plants have ever produced fruit (G. Hughes, pers. comm. 1998).

Regarding the population on Guam, Gary Wiles, Guam Division of Aquatic and Wildlife Resources (DAWR), recently reported a scattered population of about 28 mature trees from Pati Point westward to Ritidian Point within the overlay refuge on Andersen Air Force Base (G. Wiles, DAWR, pers. comm. 2000). The overlay refuge is part of the Guam National Wildlife Refuge (GNWR) that is on land owned and administered by Andersen Air Force Base, but managed for wildlife purposes through a Memorandum of Agreement with us. This population also includes 4 trees and approximately 30 saplings and seedlings within Area 50, a 24-hectare (ha) (60-acre (ac)) section of forest being intensively managed to determine the effects of removal of feral ungulates and brown tree snakes on native limestone forest habitat. In addition, 2 mature trees, approximately 30 saplings, and 70 seedlings have been located along the road to Ritidian Point within GNWR. Finally, a single tree exists under the powerline near the main road connecting the main airfield and the Munitions Storage Area on Andersen Air Force Base. Two trees are also known from the Ano Conservation Reserve, on Government of Guam land (G. Wiles, in litt. 1998).

The primary threat to *Tabernaemontana rotensis* is the lack of reproductive vigor and seed distribution due to reduced numbers of individuals. This situation includes a lack of observed seed production on Rota, which may be due to either the lack of a pollinator or predation by insects, mice, or rats (G. Hughes, pers. comm. 1998). On Guam, seeds have been observed to mold in the seed case without separating from the fruit, indicating that birds may be useful in distributing the seeds (G. Wiles, *in litt.* 1998). Competition with the nonnative vines *Momordica charantia* (balsam pear), *Mikania scandens* (mile-a-minute vine), and *Passiflora suberosa* (wild passionfruit) may threaten seedlings and saplings (G. Wiles, *in litt.* 1998). Since *T. rotensis* appears to be an edge species and now grows along roadsides, it is threatened by road widening or maintenance activities. One of the two remaining individuals on Rota was nearly destroyed by a bulldozer in the Chenchon area. Also, wildfires on Guam and fires apparently set by deer poachers on Rota have increased in frequency during the past decade and are a significant threat to this species. In 1996, an intentionally set fire burned nearby sections of the Chenchon area, one of the two known locations of this species on Rota (E. Taisacan, pers. comm. 1998). Signs of feral pig are abundant in the Northwest Field of Andersen Air Force Base, and browsing and trampling are a potential threat to unfenced individuals on Guam (G. Hughes, per. comm. 1998). Finally, this species is threatened by vandalism from local residents who perceive rare species as a threat to development, as a *T. rotensis* tree on Rota was cut down and set on fire after its location was given to people planning a golf course in the area (Raulerson and Rhinehart 1997).

Previous Federal Action

Federal action on these plants began with the publication on February 28, 1996, of the Notice of Review (NOR) of Plant and Animal Taxa (61 FR 7596). In this document, *Nesogenes rotensis, Osmoxylon mariannense,* and *Tabernaemontana rotensis* were considered candidate species. These three species were, again, listed as candidate species in the September 19, 1997, NOR (62 FR 49398). Candidate species are those for which we have sufficient information on biological vulnerability and threats to support proposals to list them as endangered or threatened species.

The processing of this proposed rule conforms with our Final Listing Priority Guidance published in the **Federal Register** on October 22, 1999 (64 FR 57114). The guidance clarifies the order in which we will process rulemakings. Highest priority is processing emergency listing rules for any species determined to face a significant and imminent risk to its well-being (Priority 1). Second priority (Priority 2) is processing final determinations on proposed additions to the lists of endangered and threatened wildlife and plants. Third priority (Priority 3) is processing new proposals to add species to the lists. The processing of administrative petition findings (petitions filed under section 4 of the Act) is the fourth priority (Priority 4). The processing of this proposed rule is a Priority 3 action.

Summary of Factors Affecting the Species

The procedures for adding species to the Federal Lists are found in section 4 of the Act (16 U.S.C. 1531 *et seq.*) and the accompanying regulations (50 CFR part 424). A species may be determined to be an endangered or a threatened species due to one or more of the five factors described in section 4(a)(1). The primary threats facing the three species in this proposed rule are summarized in Table 1.

TABLE 1.—SUMMARY OF PRIMARY THREATS

Species	Feral animals	Fire	Mice/rats	Non-native plants	Invertabrates	Development/ road work	Typhoons/ storms	Collecting/ trampling by humans	Vandalism	Limited numbers
Nesogenes rotensis.	.....	.....	.....	.....	.....	Significant threat.	Significant threat.	Significant threat.	Potential threat.	Significant threat.[1]
Osmoxylon mariannense.	Potential threat.	.....	Potential threat.	Significant threat.	Potential threat	Significant threat.	Significant threat.	.....	Potential threat.	Significant threat.[1]*
Tabernaemontana rotensis.	Potential threat.	Significant threat.	.....	Potential threat.	Potential threat	Significant threat.	Significant threat.	.....	Significant threat.	Significant threat.

*= No more than 25 individuals; 1 = No more than 1 population.

These factors and their application to *Nesogenes rotensis* Fosberg and Herbst, *Osmoxylon mariannense* (Kanehira) Fosberg & Sachet, and *Tabernaemontana rotensis* (Kanehira) Fosberg ex Stone are as follows:

A. *The present or threatened destruction, modification, or curtailment of its habitat or range.* Native vegetation on Guam and Rota has undergone extreme alteration because of past and present land use practices, including ranching, deliberate and unintentional alien animal and plant introductions, agricultural development, and military activities, including bombing, during World War II (Falanruw *et al.* 1989, Fosberg 1960). On Guam, land development and feral animals altered most of the island's native vegetation. Probably no more than 30 percent of Guam's land area is covered by native limestone and ravine forest; federally owned lands in northern Guam represent the largest contiguous forest areas.

Rota experienced extensive agricultural development by the Japanese prior to World War II, but was not invaded by allied forces during World War II. The absence of an invasion, combined with rugged topography, resulted in the persistence of stands of native forest. However, today, Rota retains less than 60 percent of its native forest (Falanruw *et al.* 1989). The continued loss of native forest is being exacerbated by the Agricultural Homestead Act of 1990, which allows for the distribution of 1-ha (2.5-ac) parcels of public land to eligible participants. Past land use plans have proposed approximately 45 percent of Rota should be designated private agricultural homestead land or as land likely to be converted to agricultural homesteads. Currently, about 324 ha (809 ac), or 4 percent of Rota, in the Chenchon area, where one of the two individuals of *Tabernaemontana rotensis* occurs, is being considered for future agricultural homesteads. This agricultural development, along with the completion of an 18-hole golf resort and plans for additional, large-scale development, continue to threaten the remaining limestone forest with fragmentation and degradation.

Throughout the Mariana Islands, goats, pigs, cattle, and deer have caused severe damage to forest vegetation by browsing on plants, causing erosion (Kessler 1997, Marshall *et al.* 1995), and retarding forest growth and regeneration (Lemke 1992). Thus, all of these islands retain only a fraction of their historical forested habitat, and this remaining habitat is threatened by the fragmentation and degradation associated with development of resorts, agricultural fields, and bulldozing for road maintenance and widening (D. Grout and L. Mehrhoff, pers. comms. 1997). For example, individuals of *Osmoxylon mariannense* and *Tabernaemontana rotensis* on Rota were almost destroyed during recent road-widening activities (D. Grout and L. Mehrhoff, pers. comms. 1997).

B. *Overutilization for commercial, recreational, scientific, or educational purposes.* At this time, overutilization is not known to be an important factor, but unrestricted scientific or horticultural collecting or excessive visits by individuals interested in seeing rare plants could seriously impact all three species, whose low numbers make them especially vulnerable to disturbances. In addition, the only known population of *Nesogenes rotensis*, located in a public park, is threatened with trampling by tourists and fishermen. Vandalism is also a threat to all three species, as evidenced by the destruction of a *Tabernaemontana rotensis* tree on Rota, which was hacked to the ground and set on fire after its location was given to people planning a golf course in the area (Raulerson and Rinehart 1997).

C. *Disease and predation.* No diseases or predators of these three species have been documented. However, an unidentified caterpillar was observed

causing defoliation damage to one *Tabernaemontana rotensis* tree (L. Mehrhoff and C. Russell, Service, pers. comms. 1997), and individuals of *Osmoxylon mariannense* have reportedly suffered defoliation by an unknown agent (E. Taisacan, pers. comm. 1997). Although why *O. mariannense* is declining is unclear, invertebrate pests, rats, or disease are suspected, judging by the poor health of the leaves, the lack of seedlings or juveniles, and the fact that several of the previously mapped older individuals have died in recent years (D. Grout, pers. comm. 1997).

In the Hawaiian Islands, two rat species, the black rat (*Rattus rattus*) and the Polynesian rat (*R. exulans*), and to a lesser extent other introduced rodents such as the European house mouse (*Mus domesticus*), eat large, fleshy fruits and strip the bark of some native plants (Cuddihy and Stone 1990, Tomich 1986, Wagner *et al.* 1985). Introduced rats (*R. tanezumi* and *R. exulans*) or house mice (M. musculus) on Rota also may be a threat to *Osmoxylon mariannense* and *Tabernaemontana rotensis*, since no regeneration of these species has been observed (Earl Campbell, U.S. Geological Survey, Biological Resources Division, pers. comm. 1998).

Although no predation or trampling by ungulates has been documented, *Osmoxylon mariannense* and *Tabernaemontana rotensis* on both islands are potentially threatened by adverse effects from feral pigs and deer. Four of the *T. rotensis* trees on Guam are protected from ungulates inside Area 50, which is fenced, though whether the trees' occurrence in this location resulted from the exclusion of ungulates is not clear. However, three individuals of *T. rotensis* on Guam are not currently fenced and could be browsed or trampled by feral animals. On Rota, cooperative efforts between the Service and the Rota Division of Fish and Wildlife resulted in the construction of fenced exclosures around the two known *T. rotensis* trees and several individuals of *O. mariannense*.

D. *The inadequacy of existing regulatory mechanisms.* Currently, these species receive no formal protection from Federal, Government of Guam, or CNMI laws. While Government of Guam laws would prohibit the take of endangered species, the CNMI has no similar regulations to protect listed species, although they sometimes provide limited species protection to specific islands regardless of overall species distributions (*e.g.*, Mariana fruit bat). A Habitat Conservation Plan (HCP) for the island of Rota is now under development (Resources Northwest 1997) by the CNMI Government and local Rota residents with technical assistance from the U.S. Fish and Wildlife Service, Pacific Islands Office. Initiated largely for the conservation of the Mariana crow (*Corvus kubaryi*), most of the land that is under discussion for possible inclusion in conservation areas under the HCP is limestone forest, which may provide potential habitat for these three plant species. However, the HCP has not yet been submitted as part of an application for an Endangered Species Act section 10 permit, and we have not made any decision regarding whether it would meet statutory issuance criteria.

The Guam National Wildlife refuge overlay was established to develop and implement a long-term comprehensive program to conserve and restore endangered and threatened species and other native flora and fauna, consistent with the national defense mission of the Air Force. For example, some of the *Tabernaemontana rotensis* individuals occurring in the overlay refuge are within Area 50, a protected section of forest. However, as discussed in Factor C, other individuals of this species are not currently fenced and could be browsed or trampled by feral animals. In addition, while the Air Force consults with us on actions that may affect listed, proposed, and candidate species and their habitats, nothing in the cooperative agreements establishing the overlay refuge would prohibit the Air Force from carrying out its mission on such lands, consistent with applicable law. Therefore, military missions such as troop training actions that occur within habitat supporting candidate species (*e.g.*, *T. rotensis*) could take precedence over conservation of candidate species.

E. *Other natural or manmade factors affecting its continued existence.* The combination of increased storm disturbance frequency and competition from alien species may be significantly altering the condition of habitat occupied by *Tabernaemontana rotensis* and *Osmoxylon mariannense*. Guam and Rota have a long history of disturbances by tropical typhoons (Weir 1991), and the native biota may be adapted to these events; however, in the past decade, frequent typhoons have severely impacted both islands. In addition, all three species are threatened by competition from one or more nonnative plant species. *Tabernaemontana rotensis* may be threatened by *Momordica charantia*, *Mikania scandens*, and *Passiflora suberosa*. *Nesogenes rotensis* is threatened by *Casuarina equisetifolia*, which is becoming established in the coastal strand habitat at Pona Point Fishing Cliff. *C. equisetifolia* will likely spread and may significantly change the coastal scrubland into a forest habitat with no understory plants or available sunlight. Destruction of the sabana forest canopy by typhoons in recent years has not only destroyed individual *O. mariannense* trees (Raulerson and Rinehart 1997), but has also altered subcanopy habitat conditions over the long term by opening up and drying out older, closed forest habitat (E. Taisacan, pers. comm. 1998). In opened forest areas, various opportunistic, weedy vines such as *M. charantia*, *M. scandens*, and *P. suberosa* cover the ground (Fosberg 1960; Guy Hughes, pers. comm. 1998) and may not provide the conditions for seed germination and seedling growth as is provided in closed-canopy, high-stature forests covered with mosses and various epiphytic species like orchids.

The small number of individuals of the three species covered by this proposed rule increases the potential for extinction from natural or human-caused random events. The limited gene pool may depress reproductive vigor, or a single human-caused or natural environmental disturbance could destroy a significant percentage of the individuals or whole populations. For example, a typhoon could cause the destruction of the remaining individuals of *Tabernaemontana rotensis* on the Guam Naval Magazine, or a storm surge could destroy the only remaining population of *Nesogenes rotensis*.

We have carefully assessed the best scientific and commercial information available on the past, present, and future threats facing these species in determining to propose this rule. Based on this evaluation, we propose to list *Nesogenes rotensis*, *Osmoxylon mariannense*, and *Tabernaemontana rotensis* as endangered. These three species are threatened by one or more of the following: habitat degradation or destruction by feral deer and pigs; competition for space, light, water, and nutrients with naturalized, introduced plant species; road construction and maintenance activities; recreational activities; natural disasters or random environmental events; fire; vandalism; development of agricultural homesteads, resorts, and golf courses; limited reproductive vigor; and potentially insect, mouse, or rat predation. *Osmoxylon mariannense* is known from 1 scattered population of approximately 20 individuals, while *Nesogenes rotensis* is known from 1 population of approximately 30 plants. Only around 30 adult *Tabernaemontana rotensis* trees are known from two

scattered populations on Guam and Rota. Small population size and limited distribution make these species particularly vulnerable to extinction from reduced reproductive vigor or random environmental events.

Critical Habitat

Critical habitat is defined in section 3, paragraph (5)(A) of the Act as the specific areas within the geographical area occupied by a species, at the time it is listed in accordance with the Act, on which are found those physical or biological features essential to the conservation of the species and that may require special management considerations or protection; and specific areas outside the geographical area occupied by a species at the time it is listed in accordance with the provisions of section 4 of the Act, upon a determination by the Secretary that such areas are essential for the conservation of the species. ''Conservation'' means the use of all methods and procedures needed to bring the species to the point at which listing under the Act is no longer necessary.

Critical habitat designation, by definition, directly affects only Federal agency actions through consultation under section 7(a)(2) of the Act. Section 7(a)(2) requires Federal agencies to ensure that activities they authorize, fund, or carry out are not likely to jeopardize the continued existence of a listed species or destroy or adversely modify its critical habitat.

Section 4(a)(3) of the Act, as amended, and implementing regulations (50 CFR 424.12) require that, to the maximum extent prudent and determinable, we designate critical habitat at the time the species is determined to be endangered or threatened. Our regulations (50 CFR 424.12(a)(1)) state that designation of critical habitat is not prudent when one or both of the following situations exist—(1) the species is threatened by taking or other activity and the identification of critical habitat can be expected to increase the degree of threat to the species or (2) such designation of critical habitat would not be beneficial to the species.

We propose that critical habitat is prudent for *Nesogenes rotensis, Osmoxylon mariannense*, and *Tabernaemontana rotensis*. In the last few years, a series of court decisions have overturned Service determinations regarding a variety of species that designation of critical habitat would not be prudent (*e.g.*, *Natural Resources Defense Council* v. *U.S. Department of the Interior* 113 F. 3d 1121 (9th Cir. 1997); *Conservation Council for Hawaii* v. *Babbitt*, 2 F. Supp. 2d 1280 (D. Hawaii 1998)). Based on the standards applied in those judicial opinions, we believe that the designation of critical habitat for these species would be prudent.

Due to the small population sizes, the three species are vulnerable to unrestricted collection, vandalism, or other disturbance. We remain concerned that these threats might be exacerbated by the publication of critical habitat maps and further dissemination of locational information. However, although we are aware of specific evidence of vandalism, we do not believe that the designation of critical habitat will increase the degree of threat. In addition, we have not found specific evidence of collection or trade of these species or any similarly situated species. Consequently, consistent with applicable regulations (50 CFR 424.12(a)(1)(i)) and recent case law, we do not expect that the identification of critical habitat will increase the degree of threat to these species of taking or other human activity.

In the absence of a finding that critical habitat would increase threats to a species, if any benefits would result from critical habitat designation, then a prudent finding is warranted. In the case of these species, some benefits may result from designation of critical habitat. The primary regulatory effect of critical habitat is the section 7 requirement that Federal agencies refrain from taking any action that destroys or adversely modifies critical habitat. While a critical habitat designation for habitat currently occupied by this species would not be likely to change the section 7 consultation outcome because an action that destroys or adversely modifies such critical habitat would also be likely to result in jeopardy to the species, in some instances section 7 consultation might be triggered only if critical habitat is designated. Examples could include unoccupied habitat or occupied habitat that may become unoccupied in the future. Designating critical habitat may also provide some educational or informational benefits. Therefore, we find that critical habitat is prudent for these three species.

However, we cannot propose critical habitat designations for these species at this time. Our Hawaiian field office, which would have the lead for such proposals, is in the process of complying with the court order in *Conservation Council for Hawaii* v. *Babbitt*, CIV NO. 97–00098 ACK (D. Haw. Mar. 9 and Aug. 10, 1998). In that case, the United States District Court for the District of Hawaii remanded to the Service its ''not prudent'' findings on critical habitat designation for 245 species of Hawaiian plants. The court ordered us not only to reconsider these findings, but also to designate critical habitat for any species for which we determine on remand that critical habitat designation is prudent. Proposed designations or nondesignations for 100 species are to be published by November 30, 2000. Proposed designations or nondesignations for the remaining 145 species are to be published by April 30, 2002. Final designations or nondesignations are to be published within 1 year of each proposal. Compliance with this court order is a huge undertaking involving critical habitat determinations for over one-fifth of all species that have ever been listed under the Endangered Species Act, and over one-third of all listed plant species. In addition, we have been ordered to include in this effort critical habitat designations for an additional 10 plants that are the subject of another lawsuit. See *Conservation Council for Hawaii* v. *Babbitt*, CIV. NO. 99–00283 HG. We cannot develop proposed critical habitat designations for these three plant species without significant disruption of the field office's intensive efforts to comply with these court orders.

To attempt to do so could also affect the listing program Region-wide. Administratively, the Service is divided into seven geographic regions. These three species are under the jurisdiction of Region 1, which includes California, Oregon, Washington, Idaho, Nevada, Hawaii, and other Pacific Islands. About one-half of all listed species occur in Region 1. Region 1 receives by far the largest share of listing funds of any Service region because it has the heaviest listing workload. Region 1 must also expend its listing resources to comply with existing court orders or settlement agreements. In fact, in the last fiscal year, all of the Region's funding allocation for critical habitat actions were expended to comply with court orders. If we were to immediately prepare proposed critical habitat designations for these 3 species notwithstanding the court order pertaining to 245 Hawaiian plant species, efforts to provide protection to many other species that are not yet listed would be delayed. While we believe there may be some benefits to designating critical habitat for these species, these benefits are significantly fewer in comparison to the benefits of listing a species under the Endangered Species Act because, as discussed

above, the primary regulatory effect of critical habitat is limited to the section 7 requirement that Federal agencies refrain from taking any action that destroys or adversely modifies critical habitat.

As explained in detail in the Final Listing Priority Guidance for FY2000 (64 FR 57114), our listing budget is currently insufficient to allow us to immediately complete all of the listing actions required by the Act. We plan to employ a priority system for deciding which outstanding critical habitat designations should be addressed first. We will focus our efforts on those designations that will provide the most conservation benefit, taking into consideration the efficacy of critical habitat designation in addressing the threats to the species, and the magnitude and immediacy of those threats. Deferral of a proposal to designate critical habitat for these three species will allow us to concentrate our limited resources on higher priority critical habitat and other listing actions, while allowing us to put in place protections needed for the conservation of these three Mariana Islands plants without further delay. Therefore, given the current workload in Region 1 and, particularly, the Hawaiian field office, we expect that we will be unable to develop a proposal to designate critical habitat for these three plants until FY2004.

We will make the final critical habitat determination with the final listing determination for these three species. If this final critical habitat determination is that critical habitat is prudent, we will develop a proposal to designate critical habitat for these species as soon as feasible, considering our workload priorities.

Available Conservation Measures

Conservation measures provided to species listed as endangered or threatened under the Act include recognition, recovery actions, requirements for Federal protection, and prohibitions against certain practices. Recognition through listing encourages and results in conservation actions by Federal, State, and private agencies, groups, and individuals. The Act provides for possible land acquisition and cooperation with the States and requires that recovery actions be carried out for all listed species. The protection required of Federal agencies and the prohibitions against taking and harm are discussed, in part, below.

Section 7(a) of the Act, as amended, requires Federal agencies to evaluate their actions with respect to any species that is proposed or listed as endangered or threatened and with respect to its critical habitat, if any is being designated. Regulations implementing this interagency cooperation provision of the Act are codified at 50 CFR part 402. Section 7(a)(4) of the Act requires Federal agencies to confer informally with us on any action that is likely to jeopardize the continued existence of a proposed species or result in destruction or adverse modification of proposed critical habitat. If a species is subsequently listed, section 7(a)(2) requires Federal agencies to ensure that activities they authorize, fund, or carry out are not likely to jeopardize the continued existence of such a species or to destroy or adversely modify its critical habitat. If a Federal action may affect a listed species or its critical habitat, the responsible Federal agency must enter into formal consultation with us.

Federal agency actions that require conference and/or consultation as described in the preceding paragraph may include, but not be limited to: Army Corps of Engineers projects, such as the construction of roads, firebreaks and bridges; various U.S. armed forces activities on Guam, and possibly the northern Mariana Islands, such as combat and mobility training, and construction; Natural Resource Conservation Service projects; Federal Emergency Management Agency activities; and U.S. Department of Housing and Urban Development projects. Conservation of these plant species may be consistent with some ongoing operations at these sites; however, the proposed listing of these species in Guam and the CNMI could result in some restrictions on certain activities and the use of certain lands.

Listing *Nesogenes rotensis, Osmoxylon mariannense*, and *Tabernaemontana rotensis* provides for the development and implementation of a recovery plan for these species. These plans will bring together Federal, State, and regional agency efforts for conservation of the species. Recovery plans will establish a framework for agencies to coordinate their recovery efforts. The plans will set recovery priorities and estimate the costs of the tasks necessary to accomplish the priorities. They will also describe the site-specific management actions necessary to achieve conservation and survival of these species.

The Act and its implementing regulations, found at 50 CFR 17.61, 17.62, and 17.63, set forth a series of general prohibitions and exceptions that apply to all endangered plant species. Under these prohibitions, it is illegal for any person subject to the jurisdiction of the United States to import or export, transport in interstate or foreign commerce in the course of a commercial activity, sell or offer for sale in interstate or foreign commerce, or remove any such species from areas under Federal jurisdiction. In addition, the Act prohibits the malicious damage or destruction of areas under Federal jurisdiction and the removal, cutting, digging up, or damaging or destroying of such plants in knowing violation of any State/Commonwealth/Territory law or regulation, or in the course of a violation of State/Commonwealth/Territory criminal trespass law. Certain exceptions to the prohibitions apply to our agents and State conservation agencies.

The Act and 50 CFR 17.62 and 17.63 also provide for the issuance of permits to carry out otherwise prohibited activities involving endangered plant species under certain circumstances. Such permits are available for scientific purposes and to enhance the propagation or survival of the species. We anticipate that few permits would ever be sought or issued because these three species are not common in cultivation or in the wild.

Our policy, as published in the **Federal Register** on July 1, 1994 (59 FR 34272), is to identify, to the maximum extent practicable, those activities that would or would not constitute a violation of section 9 of the Act if a species is listed. The intent of this policy is to increase public awareness as to the effects of the listing on future and ongoing activities within a species' range. Only one of these species, *Tabernaemontana rotensis,* has a population on Federal land under U.S. Air Force jurisdiction within the Guam National Wildlife Refuge. Collection, damage, or destruction of this species on Federal land is prohibited without a Federal permit. Such activities involving any of the three species on non-Federal lands would constitute a violation of section 9 if conducted in knowing violation of Government of Guam or CNMI laws or regulations. The Service is not aware of any trade in these species.

Questions regarding whether specific activities would constitute a violation of section 9 should be directed to the Field Supervisor of the Pacific Islands Office (see **ADDRESSES** section). Requests for copies of the regulations for listed plants and inquiries about prohibitions and permits may be addressed to the Fish and Wildlife Service, Ecological Services, Permits Branch, 911 N.E. 11th Avenue, Portland, Oregon 97232–4181 (telephone 503–231–2063; FAX 503–231–6243).

Public Comments Solicited

We intend that any final action resulting from this proposal will be as accurate and effective as possible. Comments or suggestions from the public, other concerned governmental agencies, the scientific community, industry, or any other interested party concerning this proposed rule are requested. Comments are particularly sought concerning:

(1) Biological, commercial trade, or other relevant data concerning any threat (or lack thereof) to these species;

(2) The location of any additional populations of these species and reasons why any habitat should or should not be designated as critical habitat;

(3) Additional information on the range, distribution, and population size of these species; and

(4) Current or planned activities in the subject area and their possible impacts on these species.

Final issuance of regulations for these three species will take into consideration the comments and any additional information received by the Service, and such communications may lead to a final regulation that differs from this proposal. In accordance with interagency policy published on July 1, 1994 (59 FR 34270), upon publication of this proposed rule in the **Federal Register**, we will solicit expert reviews by at least three specialists regarding pertinent scientific or commercial data and assumptions relating to the taxonomic, biological, and ecological information for the three species. The purpose of such a review is to ensure that listing decisions are based on scientifically sound data, assumptions, and analyses, including the input of appropriate experts. We will summarize the opinions of these reviewers in the final decision document. The final determination may differ from this proposal based upon the information we receive.

You may request a public hearing on this proposal. Your request for a hearing must be made in writing and filed within 45 days of the date of publication of this proposal in the **Federal Register**. Address your requests to the Field Supervisor (see **ADDRESSES** section).

Our practice is to make comments, including names and home addresses of respondents, available for public review during regular business hours. Individual respondents may request that we withhold their home address from the rulemaking record, which we will honor to the extent allowable by law. In some circumstances, we would withhold from the rulemaking record a respondent's identity, as allowable by law. If you wish for us to withhold your name and/or address, you must state this request prominently at the beginning of your comment. However, we will not consider anonymous comments. We will make all submissions from organizations or businesses, and from individuals identifying themselves as representatives or officials of organizations or businesses, available for public inspection in their entirety.

Electronic Access and Filing

You may send comments by e-mail to 3mplants_pr@fws.gov. Please submit these comments as an ASCII file and avoid the use of special characters and any form of encryption. Please also include ''Attn: RIN 1018–AG09'' and your name and return address in your e-mail message. If you do not receive a confirmation from the system that we have received your e-mail message, contact us directly by calling our Pacific Islands Office at phone number 808–541–3441.

Executive Order 12866

Executive Order 12866 requires each agency to write regulations that are easy to understand. We invite your comments on how to make this rule easier to understand including answers to the following: (1) Are the requirements of the rule clear? (2) Is the discussion of the rule in the Supplementary Information section of the preamble helpful to understanding the rule? (3) What else could we do to make the rule easier to understand?

National Environmental Policy Act

We have determined that preparation of an environmental assessment or environmental impact statement, as defined under the authority of the National Environmental Policy Act of 1969, is not necessary when issuing regulations adopted under section 4(a) of the Endangered Species Act of 1973, as amended. We published a notice outlining our reasons for this decision in the **Federal Register** on October 25, 1983 (48 FR 49244).

References Cited

A complete list of all references cited herein is available upon request from the Pacific Islands Ecoregion Office. (See **ADDRESSES** section.)

Author: The author of this proposed rule is Guy D. Hughes (see **ADDRESSES** section) (808/541–3441).

List of Subjects in 50 CFR Part 17

Endangered and threatened species, Exports, Imports, Reporting and recordkeeping requirements, Transportation.

Proposed Regulation Promulgation

Accordingly, we propose to amend part 17, subchapter B of chapter I, title 50 of the Code of Federal Regulations, as set forth below:

PART 17—[AMENDED]

1. The authority citation for part 17 continues to read as follows:

Authority: 16 U.S.C. 1361–1407; 16 U.S.C. 1531–1544; 16 U.S.C. 4201–4245; Pub. L. 99–625, 100 Stat. 3500; unless otherwise noted.

2. Section 17.12(h) is amended by adding the following, in alphabetical order under FLOWERING PLANTS, to the List of Endangered and Threatened Plants:

§ 17.12 Endangered and threatened plants.

* * * * *

(h) * * *

Species		Historic range	Family	Status	When listed	Critical habitat	Special rules
Scientific name	Common name						
FLOWERING PLANTS							
*	*	*	*	*	*	*	
Nesoqenes rotensis	None	Western Pacific Ocean—U.S.A. (Commonwealth of the Northern Mariana Islands).	Verbenaceae	E		NA	NA

Species		Historic range	Family	Status	When listed	Critical habitat	Special rules
Scientific name	Common name						
*	*	*	*	*	*	*	
Osmoxylon mariannense.	None	Western Pacific Ocean—U.S.A. (Commonwealth of the Northern Mariana Islands).	Araliaceae	E		NA	NA
*	*	*	*	*	*	*	
Tabernaemontana rotensis.	None	Western Pacific Ocean—U.S.A. (Commonwealth of the Northern Mariana Islands and Guam).	Apocynaceae	E		NA	NA
*	*	*	*	*	*	*	

Dated: May 2, 2000.

Jamie Rappaport Clark,

Director, Fish and Wildlife Service.

[FR Doc. 00–13707 Filed 5–31–00; 8:45 am]

BILLING CODE 4310–55–P

DEPARTMENT OF THE INTERIOR

Fish and Wildlife Service

50 CFR Part 17

RIN 1018–AGO4

Endangered and Threatened Wildlife and Plants; Proposed Endangered Status for the Buena Vista Lake Shrew

AGENCY: Fish and Wildlife Service, Interior.

ACTION: Proposed rule.

SUMMARY: We, the U.S. Fish and Wildlife Service (Service), propose to list the Buena Vista Lake shrew, *Sorex ornatus relictus*, as endangered pursuant to the Endangered Species Act of 1973, as amended (Act). Prior to 1986, this subspecies had not been observed since it was first described in 1932. In 1986, three Buena Vista Lake shrews were observed at a permanent pond located within a former preserve, approximately 26 kilometers (km) (16 miles (mi)) south of Bakersfield, CA. No more than 38 individuals have been observed since they were rediscovered in 1986. The only known extant Buena Vista Lake shrew population is threatened primarily by agricultural activities, modifications and potential impacts to local hydrology, uncertainty of water delivery, possible toxic effects from selenium poisoning, and random naturally occurring events. This proposal, if made final, would implement the Federal protection and recovery provisions afforded by the Act for the Buena Vista Lake shrew.

DATES: We must receive comments from all interested parties by July 31, 2000. Public hearing requests must be received by July 17, 2000.

ADDRESSES: Send your comments and materials concerning this proposal to the Field Supervisor, Sacramento Fish and Wildlife Office, U.S. Fish and Wildlife Service, 2800 Cottage Way, Rm W–2605, Sacramento, California 95825. Comments and materials received, as well as the supporting documentation used in preparing the rule, will be available for public inspection, by appointment, during normal business hours at the above address.

FOR FURTHER INFORMATION CONTACT: Dwight Harvey, Sacramento Fish and Wildlife Office (see **ADDRESSES** section) (telephone 916/414–6600; facsimile 916/414–6710).

SUPPLEMENTARY INFORMATION:

Background

The Buena Vista Lake shrew, *Sorex ornatus relictus,* is one of nine subspecies within the ornate shrew *Sorex ornatus* species complex known to occur in California (Hall 1981; Owen and Hoffmann 1983; Maldonado 1992). *Sorex ornatus* belongs to the order Insectivora and family Soricidae, subfamily Soricinae, and the tribe Soricini, with three subgenera (Owen and Hoffmann 1983; Junge and Hoffmann 1981).

Sorex ornatus relictus are primarily insectivorous mammals that are the approximate size of a mouse. They have a long snout, tiny bead-like eyes, ears that are concealed, or nearly concealed, by soft fur, and five toes on each foot (Ingles 1965; Burt and Grossenheider 1964). *Sorex ornatus relictus* are active day or night. When they are not sleeping, they are searching for food. These shrews eat more than their own weight each day (Burt and Grossenheider 1964) to withstand starvation and maintain their body weight at high rates of metabolism (McNab 1991). *Sorex ornatus relictus* can have an impact on surrounding plant communities by consuming large quantities of insects, slugs, and other invertebrates that can influence such things as plant succession and control the irruptions of pest insects (Maldonado 1992; Williams 1991). *Sorex ornatus relictus* also may be an important prey species for raptors, snakes, and carnivores (Maldonado 1992).

Grinnell (1932) was the first to describe *Sorex ornatus relictus*. According to Grinnell's description, the Buena Vista Lake shrew's back is predominantly black with a buffy-brown speckling pattern, its sides are more buffy-brown than the upper surface, and its underside is smoke-gray. The tail is faintly bicolor and blackens toward the end both above and below. The Buena Vista Lake shrew weighs approximately 4 grams (g) (0.14 ounces (oz)) (Kathy Freas, Stanford University, pers. comm. 1994) and has a total length ranging from 98 to 105 millimeters (mm) (3.85 to 4.13 inches (in.)) with a tail length of 35 to 39 mm (1.38 to 1.54 in.) (Grinnell 1932). The Buena Vista Lake shrew differs from its geographically closest subspecies, the ornate shrew *Sorex ornatus* spp. *ornatus*, by having darker, grayish-black coloration, rather than brown. In addition, *S. o.* ssp. *relictus* has a slightly larger body size; shorter tail; skull with a shorter, heavier rostrum; and a higher and more angular brain-case in dorsal view than *S. o.* ssp. *ornatus* (Grinnell 1932).

Ornate shrews, on the average, rarely live longer than 12 months, and evidence indicates that the normal

lifespan does not exceed 16 months (Rudd 1955). In montane woodlands, shrews have a well-defined reproductive season that lasts from mid-May through August (Williams 1991). They give birth to up to two litters per year containing four to six young. The number of litters depends on how early or late in the year the young are born and can become sexually active (Owen and Hoffmann 1983). The Buena Vista Lake shrew has a breeding season that begins in February or March, and may either extend later in the year, based on habitat quality and availability of water, or end with the onset of the dry season in May or June (Jesus Maldonado, University of California-Los Angeles, pers. comm. 1998).

The Buena Vista Lake shrew was originally described by Grinnell (1932) as a new subspecies, *Sorex ornatus relictus*, based on the type specimen and two other specimens collected around the old Buena Vista Lake bed. On October 21, 1909, a single specimen of *S. o.* ssp. *relictus* was collected at Buttonwillow, a town approximately 40 km (25 mi) northwest of Buena Vista Lake (Williams 1986; Doug Long, California Academy of Sciences, pers. comm. 1998). Grinnell (1932) noted evidence that integration between the subspecies *Sorex ornatus ornatus* and *S. o.* ssp. *relictus* occurred in areas of geographic overlap. This integration prompted Freas (1990) to question the legitimacy of the Buena Vista Lake shrew's status as a distinct subspecies. Currently, the entire *Sorex ornatus* complex (consisting of eight subspecies in California and one in Baja California) is undergoing additional genetic and morphological evaluation (J. Maldonado, pers. comm. 1998). Preliminary results from strictly morphological measurements for this group were equivocal throughout California. However, mitochondrial DNA and micro-satellite nuclear sequences and allozyme data have aided in determining subspecies ranges. From these data, researchers determined that the Buena Vista Lake shrew is a distinct subspecies from other S. ornatus subspecies; it is unlike any other sampled throughout the southern San Joaquin Valley (J. Maldonado, pers. comm. 1998).

Based on Grinnell's (1933) records in the Museum of Vertebrate Zoology at Berkeley (three museum specimens and related field notes), the distribution of the Buena Vista Lake shrew was historically limited to the marshlands of the southern San Joaquin Valley south from approximately where the waters of the Kings River divide toward the San Joaquin River and bed of Tulare Lake, with the animals living in the swampy margins of Kern, Buena Vista, Goose, and Tulare Lakes. However, by the time the shrew was discovered, Grinnell stated that the beds of these lakes were already dry and mostly cultivated with only sparse remnants of the original fauna (Grinnell 1932). Williams (1986) stated that nearly all of the valley floor in the Tulare Basin is cultivated and that most of the lakes and marshes had been drained and cultivated.

The Buena Vista Lake shrew was likely historically distributed in the marshlands of the San Joaquin Valley throughout most of the Tulare Basin (Grinnell 1933; U.S. Fish and Wildlife Service 1997). The Buena Vista Lake shrew occurs on property owned by the J.R. Boswell Company (Company), formerly known as the Kern Lake Preserve (Preserve), on the old Kern Lake bed, in Kern County, California (California Natural Diversity Data Base (CNDDB)1986). This property totals about 33.5 hectares (ha) (83 acres (ac)), and the only known viable population of Buena Vista Lake shrews inhabits a small 1.2-ha (3-ac) wetland area that exists there. Although the Preserve has remained relatively unchanged since the Buena Vista Lake shrew was detected at this site in 1986, the future management of the Preserve and the future existence of this subspecies is uncertain.

Water is a necessary component of the Buena Vista Lake shrew's environment. Moisture is required to support a diverse insect fauna, which is the primary food source needed to maintain the shrew's high metabolism. During surveys conducted on the Preserve in 1988 and 1990, Freas (1990) found a clear trend in preference of moderately moist (mesic) habitats over drier (xeric) habitats by the shrew, with 25 animals being captured in the mesic environments and none in xeric habitat. Maldonado (1992) also acknowledged this type of habitat preference, stating that the shrew is closely associated with dense, riparian understories that provide food, cover, and moisture.

The permanent pond where the subspecies occurs is located within the Preserve, called Gator Pond, which is not an artesian system. It is dry for many years, filling only when there is adequate flood runoff, or as in 1986, when the Company used the area for storage of excess water (The Nature Conservancy (TNC) *in litt.* 1986; Rick Hewett, TNC, *in litt.* 1987). The Rim Ditch forms the southern border of the Preserve, and another ditch was installed by the Company to convey irrigation flows to agricultural land north of the Rim Ditch. The land in and around the pond has a high (perched) water table because it is underlined with a natural hardpan soil layer that is somewhat impervious to water. In the past, this hardpan soil layer kept the area very wet and prevented it from being productively farmed. In 1982, the company installed a system of perforated tile line (drain pipes), which drains water from west to east under the Preserve, then northeast to the South Sump. Within 1 year, the perched water table began to subside, and the pond remained dry for the next 3 years (CNDDB 1986). As a result of the installation of the tile line, the areas northeast of the pond and southwest of the South Sump became arable allowing wheat and sorghum to be grown in these areas (TNC, *in litt.* 1986). The land west of the pond has never been farmed, but weeds are cleared off once a year. The land around the pond was disked annually until 1985, when TNC signed a lease and took over the management of the 33.5-ha (83-ac) Preserve. Only about 12 ha (30 ac) around the pond is now suitable habitat for the shrew (J. Maldonado, pers. comm. 1994).

All water that runs north from the Rim Ditch into the tile lines ends up in the South Sump. The water, referred to as tail water, is pumped back to the Rim Ditch. The Company agreed they could supply the excess tail water to the Preserve in the early fall for the TNC leased area. June through August are the critical irrigation months for the Company's cotton and alfalfa production. During that period, all available water is presumably used for these purposes. In 1986, the Company allowed TNC to install a separate pipe from the Rim Ditch directly to the pond as a way of providing water to this area. Three Buena Vista Lake shrew were discovered during the digging of a ditch for this pipe. (CNDDB 1986).

The Company originally supplied sufficient water to maintain the marshes on the Preserve. This water was sold to TNC through a lease agreement (Company, *in litt.* 1995). The Company committed to supplying water only during the years when quantities would be available in excess of that required for other corporate uses, primarily agriculture. Without this supplemental water supply, the remaining marshlands will dry up (J. Maldonado, pers. comm. 1994). In 1994, the Fish and Wildlife Service asked the Company to commit to a conservation agreement that would support the long-term maintenance of the Preserve and the survival of the Buena Vista Lake shrew, but the Company declined. (Edward Gierman, J.G. Boswell Company, *in litt.* 1995). TNC was concerned about the long-term health of the Preserve, but considered it

a ''non-defensible parcel'' because the land surrounding the Preserve has been converted to cotton (Reed Tollefson, TNC, pers. comm. 1994). Water diverted away from the Preserve for agricultural purposes has caused a drop in the already shallow water table, thereby eliminating most of the habitat that historically supported the shrew (R. Hewett, *in litt.* 1987). TNC staff estimated that proper management of the Preserve would require 1.9–2.5 hectare-meters (15–20 acre-feet) of water per year (R. Tollefson, pers. comm. 1995). Without a reliable water source, TNC declined to renew the lease and terminated their arrangement with the Company to maintain the Preserve (Sabin Phelps, TNC, pers. comm. 1995).

Since the rediscovery of the Buena Vista Lake shrew at the Preserve, the subspecies has been found only three other times. In 1992, one shrew was found alive under a sprinkler cover, and another was found dead in a manager's residence at the Kern National Wildlife Refuge (Refuge), Kern County, California (Morgan Cook, Service, pers. comm. 1995). One additional shrew was found dead in 1994 within the same residence on the Refuge. This residence is currently the Refuge headquarters and is one of two buildings located on a 4-ha (10-ac) compound surrounded by lawns and trees (Jack Allen, Service, pers. comm. 1998). The Refuge is located approximately 80 km (50 mi) northwest of the Preserve (Joseph Engler, Service, *in litt.* 1994).

Water management practices at the Refuge have focused on waterfowl, and riparian habitat has not received adequate water over the years to maintain riparian diversity (J. Engler, *in litt.* 1994). If *Sorex ornatus relictus* still exists, it would probably be found around a 323-ha (800-ac) marsh unit located on the south side of the Refuge where emergent vegetation, such as willows and cottonwoods exist. The marsh unit also remains moist longer than most other marshes on the Refuge (J. Allen, pers. comm. 1998). The constant lawn, shrub, and tree watering and the ponds at the Refuge headquarters may be sufficient to maintain any potential shrew populations (J. Engler, *in litt.* 1994).

Recent genetic data have confirmed that the shrews found at the Refuge were Buena Vista Lake shrews (J. Maldonado, pers. comm. 1998). No additional Buena Vista Lake shrews, nor any other shrew species, have been found at the Refuge.

The elimination of most of the riparian vegetation with associated marsh habitat that once occurred in the southern San Joaquin Valley has drastically reduced the amount of suitable habitat available to the shrew, and may have restricted the animal to the Preserve. Rapid agricultural, urban, and energy developments since the early 1900s have severely reduced and fragmented native habitats. Historically, the Tulare Basin, including the former Tulare, Buena Vista, Goose, and Kern Lakes with their respective overflow marshes, provided 19 percent of the Tulare Basin valley floor habitat (Werschkull *et al.* 1992). Around the turn of the 20th century, the Tulare Basin had 104,890 ha (259,189 ac) of valley fresh water marsh, 177,005 ha (437,388 ac) of valley mixed riparian forests, and 105,333 ha (260,283 ac) of valley sink scrub, making a total of 387,229 ha (956,860 ac) of potentially suitable Buena Vista Lake shrew habitat. By the early 1980s, the combined total had been reduced to 19,019 ha (46,996 ac), less than 5 percent of the original habitat (Werschkull *et al.* 1992). As of 1995, intensive irrigated agriculture comprised 1,239,961 ha (3,064,000 ac) or about 96 percent of the total lands within the Tulare Basin. Cotton, grapes, and alfalfa represented the top three crops (California Department of Water Resources (DWR) 1998).

All of the natural plant communities in the Tulare Basin have been affected by the transformation of this area to production of food, fiber, and fuel at the expense of the natural biological diversity (Spiegel and Anderson 1992; Griggs *et al.* 1992). As more canals were built, and more water was diverted for irrigation of the floodplains of the major rivers of the southern San Joaquin Valley, less water was available to keep the riparian forests alive, and less water reached the lakes. By the early 1930s, the former Tulare, Buena Vista, Goose, and Kern Lakes were virtually dry and open for cultivation (Griggs 1992).

Irrigation, combined with subsurface drainage, have caused naturally occurring selenium to be leached from agricultural soils in the San Joaquin Valley. Elevated concentrations of selenium are believed to have caused major wildlife mortalities in places like the Kesterson National Wildlife Refuge (Kesterson) (Moore *et al.* 1989). The leaching of selenium has increased in recent times due to the increased supply of irrigation water for the cultivation of crops in the Tulare Basin. In 1984, elevated selenium levels in the blood and liver were measured in several small and large mammals from Kesterson (Clark 1987; Clark *et al.* 1989). Ornate shrews captured around Kesterson showed selenium concentrations (parts per million (ppm) dry weight) 3 to 25 times greater than those found for any other small mammal at the same site (Clark 1987). As with other forms of wildlife, selenium toxicity represents a serious threat to the continued existence of the Buena Vista Lake shrew.

Previous Federal Action

The September 18, 1985, Notice of Review (50 FR 37958), included the Buena Vista Lake shrew as a category 2 candidate species for possible future listing as threatened or endangered. Category 2 candidates were those taxa for which listing as threatened or endangered might be warranted, but for which adequate data on biological vulnerability and threats were not available to support issuance of listing proposals.

We received a petition dated April 18, 1988, from Ms. Doris Dixon of The Interfaith Council for the Protection of Animals and Nature to list the Buena Vista Lake shrew and three additional shrew species as endangered species. We determined that the petition presented substantial information indicating that the requested action may be warranted. We announced this finding in the **Federal Register** on December 30, 1988 (53 FR 53030). The Buena Vista Lake shrew remained a category 2 candidate in the January 6, 1989, Notice of Review (54 FR 554). In the November 21, 1991, Notice of Review (56 FR 58804), the Buena Vista Lake shrew was elevated to category 1 status based on new information received by us. Category 1 taxa were those taxa for which we had on file sufficient information on biological vulnerability and threats to support preparation of a listing proposal.

The processing of this proposed rule conforms with our listing priority guidance published in the **Federal Register** on October 22, 1999 (64 FR 57114). This guidance clarifies the order in which we will process future rulemakings. The highest priority is processing emergency listing rules for any species determined to face a significant and imminent risk to its well-being (Priority 1). The second priority (Priority 2) is processing final determinations on proposed additions to the lists of endangered and threatened wildlife and plants. The third priority is processing new proposals to add species to the lists. The processing of administrative petition findings (petitions filed under section 4 of the Act) is the fourth priority. This proposed rule ranks as a Priority 3 action.

Summary of Factors Affecting the Species

Section 4 of the Endangered Species Act (Act) of 1973, as amended (16 U.S.C. 1533 *et seq.*), and regulations (50 CFR part 424) promulgated to implement the listing provisions of the Act set forth the procedures for adding species to the Federal List of Endangered and Threatened Wildlife. A species may be determined to be endangered or threatened based on one or more of the five factors described in section 4(a)(1) of the Act. These factors and their application to the Buena Vista Lake shrew, *Sorex ornatus relictus,* are as follows:

A. The Present or Threatened Destruction, Modification, or Curtailment of Its Habitat or Range

The amount of suitable habitat for the Buena Vista Lake shrew has been significantly reduced over time due to the systematic drainage of land and shallow lakes for the purpose of agricultural crop production. As a result, over 95 percent of the riparian vegetation and associated marsh habitat of the southern San Joaquin Valley has been eliminated. The Buena Vista Lake shrew appears to be restricted to the Preserve location.

Clark *et al.* (1982) were unsuccessful in capturing any Buena Vista Lake shrews in suitable habitat found on TNC's Paine Wildflower Preserve or at the Voice of America site west of Delano. The Paine Wildflower Preserve is about 13 km (8 mi) south of the Kern National Wildlife Refuge and 72 km (45 mi) northwest of the Preserve. The Voice of America site is located 40 km (25 mi) due east of the Kern Refuge and 80 km (50 mi) north of the Preserve. No Buena Vista Lake shrews were found after conducting surveys for small mammals along the Kern River Parkway in 1987 (Beedy *et al.* 1992). This area supports 68 ha (168 ac) of riparian woodlands, as well as 9 ha (22 ac) of freshwater marshes, and it is located 30 km (19 mi) due north of the Preserve. In 1991, surveys were conducted in suitable habitat on the Tule Elk State Reserve, 32 km (20 mi) northwest of the Preserve. No shrews were captured in these surveys (Maldonado 1992). In a 1995 survey at the Preserve, a total of 10 individuals were trapped (Maldonado 1998).

The only known remaining population of Buena Vista Lake shrews exists on the Preserve. Water delivery to maintain the Preserve and support the Buena Vista Lake shrew habitat cannot be assured because the natural water table has been lowered by past and present agricultural practices on and around the Preserve. Despite available water supplies, the Company supplies water to the Preserve only during years of high runoff, at times when excess water is available at the end of the growing season, and after commercial crop needs are met. This process occurs through an informal agreement between the Company and the lease holder of the property. Without a dependable water supply of approximately 1.9–2.5 hectare-meters (15–20 acre-feet) required to maintain the Preserve's marshes, the continued existence of the Buena Vista Lake shrew is unlikely.

Other remnant patches of suitable habitat that might support the Buena Vista Lake shrew include areas within the Buena Vista Lake Aquatic Recreation Area, the Buena Vista Golf Course, and along the Buena Vista Slough, Goose Lake Slough, and the Kern River west of Bakersfield, CA (Maldonado 1994; J. Maldonado, pers. comm. 1998; U.S. Fish and Wildlife Service 1997). Additional areas of suitable moist locations that might provide remnant shrew habitat occur within the Pixley National Wildlife Refuge west of the former Tulare Lake bed, as well as around the former Goose Lake bed. However, small habitat patches within these areas are marginal at best and would not likely support a significant number of animals (J. Maldonado, pers. comm. 1998). In addition, these areas represent highly disjunct and fragmented habitat that may not be reconnected in the foreseeable future.

B. Overutilization for Commercial, Recreational, Scientific, or Educational Purposes

The subspecies has no known commercial or recreational value. The only known extant population of the Buena Vista Lake shrew is on private property.

C. Disease or Predation

Although there are no documented cases of disease related to Buena Vista Lake shrews, the possibility of disease and associated threats exists. The small population size and restricted distribution increases their vulnerability to epidemic diseases. Buena Vista Lake shrews, like most small mammals, are host to numerous internal and external parasites, such as round worms, mites, ticks, and fleas, that may infest individuals and local populations in varying degrees with varying adverse effects (J. Maldonado, pers. comm. 1998). However, the significance of the threat of disease and parasites to the Buena Vista Lake shrew is not known.

Most carnivores of the Tulare Basin, such as coyotes, foxes, weasels, raccoons, feral cats and dogs, as well as certain avian predators such as hawks, owls, herons, jays and egrets, are all known predators of small mammals (Ingles 1965; J. Maldonado, pers. comm. 1998).

D. The Inadequacy of Existing Regulatory Mechanisms

The primary cause of decline of the Buena Vista Lake shrew is the loss and fragmentation of habitat due to human activities. Federal, State, and local laws have not been adequate in preventing destruction of the limited Buena Vista Lake shrew habitat.

Under section 404 of the Clean Water Act (33 U.S.C. 1344 *et seq.*), the U.S. Army Corps of Engineers (Corps) regulates the discharge of fill material into waters of the United States, including wetlands. Section 404 regulations require applicants to obtain a permit for projects that involve the discharge of fill material into waters of the United States. However, many farming activities do not require a permit due to their exemption under the Clean Water Act (53 FR 20764; R. Wayland III, Environmental Protection Agency (EPA), *in litt.* 1996). Projects that are subject to regulation may qualify for authorization to place fill material into headwaters and isolated waters, including wetlands, under several nationwide permits. Moreover, these projects can normally be permitted with minimal environmental review by the Corps. An individual permit may be required by the Corps if a project otherwise qualifying under a nationwide permit would have greater than minimal adverse environmental impacts. No activity that is likely to jeopardize the continued existence of a threatened or endangered species, or that is likely to destroy or adversely modify the critical habitat of such species, is authorized under any nationwide permit.

However, the Corps typically confines its evaluation of impacts only to those areas under its jurisdiction (*i.e.,* wetlands and other waters of the United States). Impacts to uplands and mitigation for upland habitat losses are not typically addressed by the Corps unless such actions affect a listed species. More importantly, the termination of water sales to the Preserve does not fall under Corps jurisdiction. The lack of a guaranteed water supply is one of the major reasons TNC determined that the habitat on the Preserve could not remain viable and led to TNC's refusal to renew the lease

and manage the Preserve (S. Phelps, pers. comm. 1995).

The California Environmental Quality Act (CEQA) (Public Resources Code § 21000–21177) requires a full disclosure of the potential environmental impacts of proposed projects. The public agency with primary authority or jurisdiction over a project is designated as the lead agency and, therefore, is responsible for conducting a review of the project and consulting with the other agencies concerned with the resources affected by the project. Section 15065 of the CEQA Guidelines, as amended, requires a finding of significance if a project has the potential to ''reduce the number or restrict the range of a rare or endangered plant or animal.'' Once significant effects are identified, the lead agency has the option to require mitigation for effects through changes in the project or to decide that overriding considerations make mitigation infeasible (CEQA § 21002). In the latter case, projects may be approved that cause significant environmental damage, such as destruction of listed endangered species and/or their habitat. Protection of listed species through CEQA is, therefore, dependent upon the discretion of the agency involved.

E. Other Natural or Manmade Factors Affecting Its Continued Existence

As stated previously, selenium toxicity represents a serious threat to the continued existence of the Buena Vista Lake shrew. No cases of widespread selenium poisoning (selenosis) among native mammals in nature have been well documented. The lowest dietary threshold for mammalian toxicity was 1.4 parts per million (ppm) (dry weight) as associated with sublethal effects from lifetime exposure in rats (Eisler 1985). Longevity was reduced at 3 ppm in the lifetime diet. Olson (1986) reports a minimum dietary exposure associated with reproductive selenosis in rats of 3 ppm. Although stomach content data for the Buena Vista Lake shrew is lacking, aquatic insects such as brine flies *Diptera ephydridae,* damselflies *Odonata zygoptera,* and midge flies *Diptera chironomidae,* have been found in the stomachs of other shrew species (Churchfield 1991), and could be a dietary source for the highly insectivorous Buena Vista Lake shrew. Selenium concentrations have been measured in the above species of flies collected at agricultural drainage evaporation ponds throughout the Tulare Basin (Moore *et al.* 1989). Concentrations of selenium have been measured from 1.4 to 26.9 ppm (dry weight) in these flies from six evaporation ponds located a few miles west of the Preserve to the northern border of the Kern National Wildlife Refuge (Moore *et al.* 1989). The potential dietary selenium concentration levels are well within the known range that is toxic to small mammals (Olsen 1986), and could potentially adversely affect the Buena Vista Lake shrew. Such effects could include, but may not be limited to, reduced reproductive output or premature death (Eisler 1985).

Some of the highest selenium levels (greater than 200 parts per billion) have been measured from ground water throughout the historic range of the Buena Vista Lake shrew within the Tulare Basin, and specifically, in evaporation ponds within the agricultural lands immediately surrounding the only known population of shrews at the Preserve (DWR 1997). The increased supply of imported water and little or no exported drain water has resulted in the raising of the ground water table throughout the Tulare Basin (DWR 1997). Water table levels have been measured at 1.5 to 3 m (5 to 10 ft) beneath the Preserve and have steadily moved upwards since 1988 (DWR 1997). As selenium and other dissolved salts move upward with the elevated water table (perched water table), the surface vegetation takes up selenium with the water via root transpiration and enters the food chain of the shrew by becoming concentrated in insects that forage on the vegetation or reside in aquifers that concentrate these salts (Saiki and Lowe 1987; Moore *et al.* 1989).

Due to the hardpan soil layer beneath the Preserve, the water table is high and frequently floods despite the installation of tile drains. In dry years, the water supply is controlled by a single ditch or small pipe. These unpredictable variables limit the maintenance of suitable moist habitat for this population of Buena Vista Lake shrews. These conditions restrict alternative land management practices for shrews on the Preserve in the event of drought, flooding, harsh winter conditions, or human-induced environmental impacts.

The only known population of Buena Vista Lake shrews is vulnerable to the risks associated with small, restricted populations. Impacts to species populations that can lead to extinction include the loss or alteration of essential elements, such as habitat or food, the introduction of limiting factors into the environment, such as poison or predators, and catastrophic random changes or environmental perturbations, such as floods, droughts, or disease (Gilpin and Soule 1986). Many extinctions are the result of a severe reduction of population size by some deterministic event, followed by a random natural event that extirpates the species. The smaller a population is, the greater its vulnerability to such perturbations (Terbough and Winter 1980; Gilpin and Soule 1986; Shaffer 1987). The elements of risk that are amplified in very small populations include: (1) The impact of high death rates or low birth rates; (2) the effects of genetic drift (random fluctuations in gene frequencies) and inbreeding; and (3) deterioration in environmental quality (Gilpin and Soule 1986). When the number of individuals in the sole population of a species or subspecies is sufficiently low, the effects of inbreeding may result in the expression of deleterious genes in the population (Gilpin 1987). Deleterious genes reduce individual fitness in various ways, most typically by decreasing survivorship of young. Genetic drift in small populations decreases genetic variation due to random changes in gene frequency from one generation to the next. This reduction of variability within a population limits the ability of that population to adapt to environmental changes.

One scenario where loss of habitat may lead to extinction is when the species is a local endemic (because of its isolation and restricted range) (Gilpin and Soule 1986). The Buena Vista Lake shrew is a limited local endemic subspecies (Williams and Kilburn 1992), which has never been found to be locally abundant, and lives in very restricted areas of marshy wetland habitat (Bradford 1992). Because the sole population is small (only 10 known individuals as of 1995) and occurs in a single small location (12 ha (30 ac)), the Buena Vista Lake shrew is extremely vulnerable to natural or human-caused environmental impacts. No known viable populations of Buena Vista Lake shrews exist outside the former Kern Lake Preserve for recolonization if a catastrophic event were to occur at this site. While the subspecies still occurs within its limited range, whether the population is declining, how habitat conditions may be affecting the population, or how small population size may be affecting genetic and behavioral stability is unknown. Based on the vulnerability of this small population in its limited range and the extremely limited potential for suitable habitat outside this range, we believe that threats to currently occupied or potential habitat and individuals put this subspecies at a high risk for extinction.

In developing this proposed rule, we have carefully assessed the best

scientific and commercial information available regarding the past, present, and future threats facing this subspecies. The Buena Vista Lake shrew is threatened primarily by agricultural activities, modifications and potential impacts to local hydrology, uncertainty of water delivery to the Preserve, possible toxic effects from selenium poisoning, and by random naturally occurring events. Only one known population exists, and any decrease in its numbers could result in decreased genetic variability. Because of the high potential that these threats, if realized, will result in the extinction of the Buena Vista Lake shrew, the preferred action is to list the subspecies as endangered. Not listing the subspecies or listing it as threatened would not provide adequate protection and would not be consistent with the Act.

Critical Habitat

Critical habitat is defined in section 3 of the Act as: (i) The specific areas within the geographical area occupied by the species, at the time it is listed in accordance with the Act, on which are found those physical or biological features (I) essential to the conservation of the species and (II) that may require special management considerations or protection and; (ii) specific areas outside the geographical area occupied by a species at the time it is listed, upon a determination that such areas are essential for the conservation of the species. ''Conservation'' means the use of all methods and procedures needed to bring the species to the point at which listing under the Act is no longer necessary.

Section 4(a)(3) of the Act, as amended, and implementing regulations (50 CFR 424.12) require that, to the maximum extent prudent and determinable, we designate critical habitat at the time the species is determined to be endangered or threatened. Our regulations (50 CFR 424.12(a)(1)) state that the designation of critical habitat is not prudent when one or both of the following situations exist—(1) the species is threatened by taking or other human activity, and identification of critical habitat can be expected to increase the degree of threat to the species, or (2) such designation of critical habitat would not be beneficial to the species.

We propose that critical habitat is prudent for *Sorex ornatus relictus.* In the last few years, a series of court decisions have overturned Service determinations regarding a variety of species that designation of critical habitat would not be prudent (*e.g., Natural Resources Defense Council* v. *U.S. Department of the Interior* 113 F. 3d 1121 (9th Cir. 1997); *Conservation Council for Hawaii* v. *Babbitt,* 2 F. Supp. 2d 1280 (D. Hawaii 1998)). Based on the standards applied in those judicial opinions, we believe that designation of critical habitat would be prudent for *Sorex ornatus relictus.*

In the absence of a finding that critical habitat would increase threats to a species, if any benefits would result from critical habitat designation, then a prudent finding is warranted. In the case of this species, designation of critical habitat may provide some benefits. The primary regulatory effect of critical habitat is the section 7 requirement that Federal agencies refrain from taking any action that destroys or adversely modifies critical habitat. While a critical habitat designation for habitat currently occupied by this species would not be likely to change the section 7 consultation outcome because an action that destroys or adversely modifies such critical habitat would also be likely to result in jeopardy to the species, in some instances, section 7 consultation might be triggered only if critical habitat is designated. Examples could include unoccupied habitat or occupied habitat that may become unoccupied in the future. Designating critical habitat may also provide some educational or informational benefits. Therefore, we find that critical habitat is prudent for the Buena Vista Lake shrew.

As explained in detail in the Final Listing Priority Guidance for FY 2000 (64 FR 57114), our listing budget is currently insufficient to allow us to immediately complete all of the listing actions required by the Act. We plan to employ a priority system for deciding which outstanding critical habitat designations should be addressed first. We will focus our efforts on those designations that will provide the most conservation benefit, taking into consideration the efficacy of critical habitat designation in addressing the threats to the species, and the magnitude and immediacy of those threats. Deferral of the critical habitat designation for the Buena Vista Lake shrew will allow us to concentrate our limited resources on higher priority critical habitat and other listing actions, while allowing us to put in place protections needed for the conservation of the Buena Vista Lake shrew without further delay. We will make the final critical habitat determination with the final listing determination for the shrew. If this final critical habitat determination is that critical habitat designation is prudent, we will develop a proposal to designate critical habitat for the Buena Vista Lake shrew as soon as feasible, considering our workload priorities.

Available Conservation Measures

Conservation measures provided for species listed as endangered or threatened under the Act include recognition, recovery actions, requirements for Federal protection, and prohibitions against certain practices. Recognition through listing results in public awareness and conservation actions by Federal, State, and local agencies, private organizations, and individuals. The Act provides for possible land acquisition and cooperation with the States, and requires that recovery actions be carried out for all listed species. The protection required by Federal agencies and the prohibitions against certain activities are discussed, in part, below.

Section 7(a) of the Act, as amended, requires Federal agencies to evaluate their actions with respect to any species that is proposed or listed as endangered or threatened, and with respect to its critical habitat, if any is being designated. Regulations implementing this interagency cooperation provision of the Act are codified in 50 CFR part 402. Section 7(a)(2) of the Act requires Federal agencies to ensure that activities they authorize, fund, or carry out are not likely to jeopardize the continued existence of a listed species or destroy or adversely modify its critical habitat. If a Federal action may affect a listed species or its critical habitat, the responsible Federal agency must enter into formal consultation with us.

Federal agency actions that may require conference and/or consultation as described in the preceding paragraph include the U.S. Army Corps of Engineers and their authorization of projects such as the construction of drainage diversions, roads, bridges, and dredging projects subject to section 404 of the Clean Water Act.

The Buena Vista Lake shrew has been included as a candidate species in the Recovery Plan for Upland Species of the San Joaquin Valley of California (Recovery Plan) (U.S. Fish and Wildlife Service 1998). Historically, the Buena Vista Lake shrew was most common in wetland habitat, and all of its extant and potential habitat is included within the habitats of the listed species that use alkali sink and associated communities. Because the subspecies is not federally listed as endangered or threatened, the recovery actions are identified as conservation actions and are designed to ensure long-term conservation. The recovery actions include additional surveys in areas of potentially suitable

habitat, habitat restoration and creation on private as well as public lands, and study of the feasibility of reintroduction at the Tule Elk State Reserve near Tupman, California. Also identified as needed conservation actions are population genetic studies, as well as the continuous monitoring of the only known viable population at the Preserve.

The Act and its implementing regulations set forth a series of general prohibitions and exceptions that apply to all endangered wildlife. The prohibitions, codified at 50 CFR 17.21, in part, make it illegal for any person subject to the jurisdiction of the United States to take (includes harass, harm, pursue, hunt, shoot, wound, kill, trap, capture, or collect; or to attempt any of these), import or export, ship in interstate commerce in the course of commercial activity, or sell or offer for sale in interstate or foreign commerce any endangered wildlife species. It is also illegal to possess, sell, deliver, carry, transport, or ship any such wildlife that has been taken illegally. Certain exceptions apply to our agents and State conservation agencies.

Permits may also be issued to carry out otherwise prohibited activities involving endangered wildlife under certain circumstances. Regulations governing permits are codified at 50 CFR 17.22 and 17.23. Such permits are available for scientific purposes, to enhance the propagation or survival of the species, and for incidental take in connection with otherwise lawful activities.

As published in the **Federal Register** on July 1, 1994 (59 FR 34272) our policy, to identify to the maximum extent practicable at the time a species is listed those activities that would or would not constitute a violation of section 9 of the Act. The intent of this policy is to increase public awareness of the effect of a proposed listing on proposed and ongoing activities within a species' range.

We believe that, based on the best available information, the following actions will not likely result in a violation of section 9, provided these actions are carried out in accordance with any existing regulations and permit requirements:

(1) Actions that may affect the Buena Vista Lake shrew that are authorized, funded, or carried out by a Federal agency, when the action is conducted in accordance with a biological opinion issued by us pursuant to section 7 of the Act; and

(2) Actions that may affect the Buena Vista Lake shrew when the action is a part of an approved habitat conservation plan and conducted in accordance with an incidental take permit issued by us pursuant to section 10(a)(1)(B) of the Act.

Activities that we believe could likely result in a violation of section 9 include, but are not limited to:

(1) Actions not authorized under section 7 or 10 of the Act that lead to the destruction or alteration of occupied Buena Vista Lake shrew habitat through the discharge of fill material, draining, ditching, tiling, pond construction, rock removal, stream channelization, or diversion of ground water flow into or out of riparian habitat of this subspecies that are associated with activities such as the construction or installation of roads, impoundments, discharge or drain pipes, and storm water detention basins;

(2) Burning, cutting, or mowing of riparian vegetation that results in death of injury to Buena Vista Lake shrews or that results in degradation of their occupied habitat;

(3) Application of pesticides that results in death of or injury to Buena Vista Lake shrews; and

(4) Discharging or dumping toxic chemicals or other pollutants (such as sewage, oil, or gasoline) that results in death of or injury to Buena Vista Lake shrews.

Direct your questions regarding whether specific activities may constitute a violation of section 9 to the Field Supervisor of the Sacramento Fish and Wildlife Office (see **ADDRESSES** section). Requests for copies of the regulations concerning listed wildlife and general inquiries regarding prohibitions and permits may be addressed to the U.S. Fish and Wildlife Service, Ecological Services, Endangered Species Permits, 911 NE. 11th Avenue, Portland, Oregon 97232–4181 (telephone 503/231–2063; facsimile 503/231–6243).

Public Comments Solicited

We intend that any final action resulting from this proposal will be as accurate and as effective as possible. Therefore, comments or suggestions from the public, other concerned governmental agencies, the scientific community, industry, or any other interested party concerning this proposed rule are hereby solicited. We will follow our current peer review policy (59 FR 34270) in the processing of this rule. Comments are sought particularly concerning:

(1) Biological, commercial, or other relevant data concerning any threat (or lack thereof) to the Buena Vista Lake shrew;

(2) The location of any additional populations of this subspecies and habitat association (including specific vegetation and soil type), and the reasons why any habitat should or should not be determined to be critical habitat as provided by section 4 of the Act;

(3) Additional information concerning the range, distribution, and population size and genetics of this subspecies;

(4) Current or planned activities in the subject area and their possible impacts on this subspecies; and

(5) Additional relevant information concerning the life-history, habits, and dispersal of this subspecies.

A final determination for this subspecies will take into consideration the comments and any additional information received by us. Such communications may lead to a final determination that differs from this proposal.

The Act provides for one or more public hearings on this proposal, if requested. Requests must be received within 45 days of the date of publication of the proposal in the **Federal Register**. Such requests must be made in writing and addressed to the Field Supervisor, Sacramento Fish and Wildlife Office (see **ADDRESSES** section).

National Environmental Policy Act

We have determined that environmental assessments and environmental impact statements, as defined in the National Environmental Policy Act of 1969, need not be prepared in connection with regulations adopted pursuant to section 4(a) of the Act. We published a notice outlining our reasons for this determination in the **Federal Register** on October 25, 1983 (48 FR 49244).

Paperwork Reduction Act

This rule does not contain any new collections of information other than those already approved under the Paperwork Reduction Act, 44 U.S.C. 3501 *et seq.*, and assigned Office of Management and Budget clearance number 1018–0094. An agency may not conduct or sponsor, and a person is not required to respond to, a collection of information unless it displays a currently valid control number. For additional information concerning permit and associated requirements for endangered species, see 50 CFR 17.21 and 17.22.

References Cited

A complete list of all references cited herein is available upon request from the Field Supervisor, Sacramento Fish

and Wildlife Office (see **ADDRESSES** section).

Author

The primary author of this proposed rule is Dwight Harvey, U.S. Fish and Wildlife Service, Sacramento Fish and Wildlife Office (see **ADDRESSES** section).

List of Subjects in 50 CFR Part 17

Endangered and threatened species, Exports, Imports, Reporting and recordkeeping requirements, Transportation.

Proposed Regulations Promulgation

Accordingly, we propose to amend part 17, subchapter B of chapter I, title 50 of the Code of Federal Regulations, as set forth below:

PART 17—[AMENDED]

1. The authority citation for part 17 continues to read as follows:

Authority: 6 U.S.C. 1361–1407; 16 U.S.C. 1531–1544; 16 U.S.C. 4201–4245; Pub. L. 99–625, 100 Stat. 3500, unless otherwise noted.

2. Section 17.11(h) is amended by adding the following, in alphabetical order under ''MAMMALS,'' to the List of Endangered and Threatened Wildlife:

§ 17.11 Endangered and threatened wildlife.

* * * * *

(h) * * *

Species		Historic range	Vertebrate population where endangered or threatened	Status	When listed	Critical habitat	Special rules
Common name	Scientific name						
MAMMALS							
*	*	*	*	*	*		*
Shrew, Buena Vista Lake.	*Sorex ornatus relictus.*	U.S.A. (CA)	Entire	E	699	NA	NA
*	*	*	*	*	*		*

Dated: May 16, 2000.

Jamie Rappaport Clark,

Director, Fish and Wildlife Service.

[FR Doc. 00–13706 Filed 5–31–00; 8:45 am]

BILLING CODE 4310–55–P

DEPARTMENT OF COMMERCE

National Oceanic and Atmospheric Administration

50 CFR Part 622

[Docket No. 000511131–0131–01; I.D. 021500A]

RIN 0648–AM75

Fisheries of the Caribbean, Gulf of Mexico, and South Atlantic; Coastal Migratory Pelagic Resources of the Gulf of Mexico and South Atlantic; Amendment 12

AGENCY: National Marine Fisheries Service (NMFS), National Oceanic and Atmospheric Administration (NOAA), Commerce.

ACTION: Proposed rule; request for comments.

SUMMARY: NMFS proposes to implement Amendment 12 to the Fishery Management Plan for the Coastal Migratory Pelagic Resources of the Gulf of Mexico and South Atlantic (Amendment 12). This rule would extend the current moratorium on the issuance of commercial vessel permits for king mackerel through October 15, 2005. The intended effects of this proposed rule are to prevent speculative entry into the fishery and provide stability in the fishery.

DATES: Comments must be received no later than 5 p.m., eastern standard time, on July 3, 2000.

ADDRESSES: Written comments on the proposed rule must be sent to Dr. Steve Branstetter, Southeast Regional Office, NMFS, 9721 Executive Center Drive N., St. Petersburg, FL 33702. Comments also may be sent via fax to 727–570–5583. Comments will not be accepted if submitted via e-mail or Internet.

Comments regarding the collection-of-information requirements contained in this rule should be sent to Edward E. Burgess, Southeast Regional Office, NMFS, 9721 Executive Center Drive N., St. Petersburg, FL 33702, and to the Office of Information and Regulatory Affairs, Office of Management and Budget (OMB), Washington, DC 20503 (Attention: NOAA Desk Officer).

Copies of Amendment 12, which includes an environmental assessment and a regulatory impact review (RIR), may be obtained from the Gulf of Mexico Fishery Management Council, Suite 1000, 3018 U.S. Highway 301 North, Tampa, FL 33619; telephone: 813–228–2815; fax: 813–225–7015; e-mail: Gulf.Council@noaa.gov; or from the South Atlantic Fishery Management Council, Southpark Building, One Southpark Circle, Suite 306, Charleston, SC 29407–4699; telephone: 843–571–4366; fax: 843–769–4520; e-mail: Safmc@noaa.gov.

FOR FURTHER INFORMATION CONTACT: Dr. Steve Branstetter; telephone: 727–570–5305; fax: 727–570–5583; e-mail: Steve.Branstetter@noaa.gov.

SUPPLEMENTARY INFORMATION: The fisheries for coastal migratory pelagic resources are managed under the Fishery Management Plan for the Coastal Migratory Pelagic Resources of the Gulf of Mexico and South Atlantic (FMP). The FMP was prepared jointly by the Gulf of Mexico Fishery Management Council and the South Atlantic Fishery Management Council (Councils), approved by NMFS, and implemented under the authority of the Magnuson-Stevens Fishery Conservation and Management Act (Magnuson-Stevens Act) by regulations at 50 CFR part 622.

Background

Amendment 8 to the FMP, implemented in March 1998 (63 FR 10561, March 4, 1998), established a moratorium on commercial king mackerel permits through October 15, 2000. To obtain a king mackerel permit under the moratorium, a vessel owner must have owned a vessel with a commercial vessel permit for king mackerel on or before October 16, 1995, the control date for the king mackerel fishery (60 FR 53576, October 16, 1995). The intent of the moratorium is to prevent further increases in effort, to stabilize the economic performance of current participants, and possibly to reduce the number of permittees in the king mackerel fishery. The Councils noted that the number of commercial vessel permits for mackerel had increased from 1,280 to 2,754 between the 1987–88 and 1997–98 fishing years. As of March 25, 1999, the number of king and Spanish mackerel permits has declined to 2,109.

Under section 303(d)(1)(A) of the Magnuson-Stevens Act, the Councils are

precluded from submitting to NMFS, prior to October 1, 2000, an individual fishing quota (IFQ) program or an individual transferable quota (ITQ) program for agency review, approval, and implementation. The Gulf Council's development of Amendment 8 to the Fishery Management Plan for the Reef Fish Resources of the Gulf of Mexico, which was to establish a limited entry program for the commercial red snapper fishery in the Gulf (i.e., an ITQ system), required more than one year to complete. Based on this experience, the Councils have concluded that there would be insufficient time to develop a limited access program for the commercial king mackerel fishery prior to the expiration of the current moratorium.

Currently, the commercial king mackerel fisheries of both the South Atlantic and Gulf of Mexico are valued at approximately $7 million annually and are subject to closures when the quotas are filled. For the western Gulf zone, the fishery is open for approximately 6 weeks, beginning on July 1 of each year. For the eastern Gulf zone, the Florida west coast gillnet fishery closes in a matter of days after the fishery begins in January; the Florida west coast hook-and-line fishery for Gulf group king mackerel has usually closed in February or March, after a July 1 opening. The Florida east coast fishery for Gulf group king mackerel has usually closed in March after a November 1 opening; and the commercial hook-and-line fishery for Atlantic group king mackerel has reached its quota in two of the last 3 years. These annual closures indicate that fleet size and fishery effort are still excessive to harvest the allowable quotas.

The Atlantic stocks of king mackerel have rebounded from an overfished status and are no longer considered overfished and overfishing is not occurring. This upturn in status is the result of recent restrictions on fishing effort (i.e., adjustment of size, bag, and trip limits; the prohibition of net gear in Florida state waters; and the imposition of a moratorium on the number of permits issued in the fishery.) In response to the current status of the Atlantic king mackerel stock the South Atlantic Council has recommended a modest quota increase for this group, giving fishers the opportunity to harvest more fish and realize an increased economic benefit. This increase in quota is within the range recommended by the Mackerel Stock Assessment Panel and the Scientific and Statistical Committee. Such a relaxation of restrictions on the harvest, and thus the insurance of the increased availability of long term benefits for users, can be achieved by maintaining other measures currently in place.

Both the Gulf and South Atlantic Councils agree that allowing the moratorium to expire would result in an increased number of participants in these mackerel fisheries, most likely negating any reductions in effort that have been achieved as a result of the current moratorium. Any increase in participants would: Exacerbate the current derby fisheries that occur in the western Gulf zone and in the Florida west coast gillnet fishery, lead to even earlier closures, probably result in closures of the Atlantic group king mackerel fishery, and have an impact on the economic performance of the current participants. Increased participation would also compound the complexity of the Council's future actions to develop a controlled access system for this fishery. For example, new entrants may lose a good part of their new investments if the future assignment of fishing privileges is weighted more toward historical rather than current participation.

The Councils concluded that an extension of the existing moratorium on the issuance of commercial vessel permits for king mackerel is necessary to avoid these negative impacts and to provide adequate time for the Councils to evaluate and develop an alternative limited access or limited entry program. Therefore, this proposed rule would extend the expiration date of the existing moratorium from October 16, 2000, through October 15, 2005, or to the date of implementation of a license limitation, limited access, and/or IFQ or ITQ program that replaces the moratorium, whichever occurs first.

Changes Proposed by NMFS

To simplify the regulations, NMFS proposes to delete language in § 622.4 regarding implementation of the original moratorium on issuance of commercial vessel permits for king mackerel that is no longer pertinent.

Consistent with a recent change of the name of Dade County, FL, to Miami-Dade County, FL, NMFS proposes to revise all references to Dade County, FL, to read Miami-Dade County, FL, throughout 50 CFR part 622.

Classification

At this time, NMFS has not determined that the amendment this rule would implement is consistent with the national standards of the Magnuson-Stevens Act and other applicable laws. NMFS, in making that determination, will take into account the data, views, and comments received during the comment period on Amendment 12.

This proposed rule has been determined to be not significant for purposes of E.O. 12866.

Notwithstanding any other provision of law, no person is required to respond to, nor shall a person be subject to a penalty for failure to comply with, a collection-of-information subject to the requirements of the Paperwork Reduction Act (PRA) unless that collection of information displays a currently valid OMB control number.

This rule includes collection-of-information requirements that are subject to the PRA. The first collection-of-information pertains to applications for commercial vessel permits. That collection is currently approved under OMB Control No. 0648–0205 and its public reporting burden is estimated at 20 minutes per response. The second collection-of-information pertains to fishing records of vessels permitted in the commercial king or Spanish mackerel fisheries. That collection is currently approved under OMB Control No. 0648–0016 and its public reporting burden is estimated at 15 minutes per response. These burden estimates include the time for reviewing instructions, searching existing data sources, gathering and maintaining the data needed, and completing and reviewing the collection of information. Send comments regarding these burden estimates, or any other aspect of this data collection, including suggestions for reducing the burden, to NMFS and OMB (see **ADDRESSES**).

The Chief Counsel for Regulation of the Department of Commerce has certified to the Chief Counsel for Advocacy of the Small Business Administration that this proposed rule, if adopted, would not have a significant economic impact on a substantial number of small entities as follows:

The proposed rule contains a single provision to extend the commercial king mackerel permit moratorium from its current expiration date of October 15, 2000, to October 15, 2005, or until replaced with a license limitation, limited access, and/or individual fishing quota or individual transferable quota system, whichever occurs earlier. The action covers both the Gulf of Mexico and South Atlantic Federal waters. The moratorium on new permits was first instituted in March 1998 and will expire on October 15, 2000. There is a need to extend the current moratorium on new permits because progress toward designing and implementing the intended limited access system has not been as rapid as originally envisioned. Comprehensive limited access systems are difficult to develop and implement; at this point, there is insufficient

time to institute a new limited access system for the king mackerel fishery by October 15, 2000. Hence, the current action is being proposed to provide the Councils with additional time to develop a new limited access system and to ensure that the current permit moratorium does not lapse before they have completed this task.

The entities that could be affected by changes in the current system governing the ability of individual firms to engage in the lawful harvest of king mackerel in the Gulf of Mexico and the South Atlantic consist of those firms holding commercial harvest permits. There are currently about 2,100 commercial permit holders and all could be potentially affected by the proposed action. Also, all the firms holding the permits qualify as small business entities per the definition used by the Small Business Administration. Hence, a substantial number of small business entities could be affected by the action.

The concept of status quo has a somewhat unusual context in terms of this particular proposed action. Specifically, the status quo (taking no action) means that the current permit moratorium would expire, the fishery would revert to open access, and the number of permitted fishermen would likely increase. Conversely, under the proposed action, the permit moratorium, which has existed since 1998, would remain in effect until replaced by a new limited access system.

If the status quo alternative (let the current permit moratorium expire) is taken, then there would be a number of economic effects related to a reversion of the fishery to open access. For example, given that there were over 2,600 permitted entities based on the original control date for the fishery, and about 2,100 currently, it is obvious that additional vessel owners would apply for and receive permits if the moratorium is lifted. While some of these new entrants would likely obtain a permit with the intention of only establishing fishing rights in the king mackerel fishery and would not actively participate in the fishery, other new entrants would likely participate in the fishery for one or more reasons. Some new entrants might land a minimum quantity of king mackerel on the basis that having a permit, in combination with a history of at least some level of landings, would further enhance their claim to future fishery participation rights. Other new entrants would likely become active participants in the fishery. This is probable based on the fact that a number of permit transfers occur each year, and a market has developed for these transferable king mackerel permits. The price range associated with an existing permit is not known, but permits for other species in the Gulf of Mexico and South Atlantic are known to be valued at several thousand dollars. With the moratorium lifted, new entry would be possible by paying only the administrative permit fee, currently $50 for a new permit or $20 for a king mackerel endorsement to an existing permit for another species. The value conferred on current permits by the moratorium will be lost.

It is noted that at the present time under the permit moratorium, the entity giving up a permit by transfer must exit the fishery, and current exit behavior is clearly influenced by a number of factors, including the current value of a permit. Recently available logbook data for this fishery indicates that some of the current participants do not land a large amount of king mackerel on an annual basis. These are the participants who are most likely to sell their existing permits to new entrants under the continuing condition of a permit moratorium. The reasoning is that the expected net present value of their profits (net revenues) derived from their small catches are exceeded by the current market value of their king mackerel permit. As such, the permit moratorium has resulted in a reduction in the number of permits in the king mackerel fishery.

New entrants in the king mackerel fisheries will not necessarily result in a large overall increase in catch. This is because the commercial king mackerel fishery operates under an annual quota that is enforced through fishery closures. The quota for the Gulf of Mexico fishery has typically been met each year. Although not met in recent years, the quota for the South Atlantic fishery historically has been met. However, even if the new entrants do not result in a significant increase in overall landings, an increase in the rate at which king mackerel is harvested should result, particularly in the Gulf of Mexico fishery. This scenario would exacerbate the existing derby fishery in the Gulf and would tend to lead to lower overall exvessel prices because the quota would be landed in a shorter period of time.

In summary, maintaining the status quo and thereby allowing the permit moratorium to expire would result in an increase in the number of permits, a possible increase in the annual catch, a likely decrease in exvessel prices, and a loss of the existing transfer value of existing permits. The result would be a negative economic impact on all the current permit holders, including those permit holders who might otherwise be expected to sell their permits and exit the fishery under the current system. There would also be positive impacts for at least some of the new entrants because they could obtain a permit for $20 to $50 instead of paying the existing higher market price for a permit. Some of these new entrants would be expected to participate in the fishery at a significant and profitable level. In addition to these rather straightforward impacts on current and potential new entrants, the increase in the rate at which king mackerel are harvested, especially in the Gulf where a restrictive quota pertains, would intensify the existing derby fishery and the attendant loss in economic benefits typically associated with such fisheries. Reverting to an open access fishery also means that the Councils would once again have to undertake the preliminary steps necessary to establish a comprehensive limited access system. It is likely that repeating these steps would have additional negative economic impacts on at least some of those participants who are currently permitted. For example, they may have to reestablish a fishing history or take other actions necessary to continue fishing under any new limited access system.

The overall conclusion is that if the status quo alternative was chosen and the permit moratorium allowed to expire on October 15, 2000, there would be a number of negative impacts on existing participants in the king mackerel fishery in Federal waters of the Gulf of Mexico and South Atlantic. While there would likely be some positive economic impacts for a portion of any new entrants, the negative impacts of the status quo action are expected to exceed the positive impacts. An increased number of king mackerel permits would likely create a derby fishery, particularly in the Gulf where current annual quotas constrain harvests. Taking action to extend the current permit moratorium means that the likely negative economic impacts of the status quo alternative will not occur. In other words, the proposed action of extending the permit moratorium until October 15, 2005, should forestall adverse economic changes and impacts associated with the status quo scenario of letting the moratorium expire. For these reasons, it follows that the proposed action will not result in a significant economic impact on a substantial number of small business entities.

As a result, a regulatory flexibility analysis was not required. A copy of the RIR is available from the Council (see **ADDRESSES**).

List of Subjects in 50 CFR Part 622

Fisheries, Fishing, Puerto Rico, Reporting and recordkeeping requirements, Virgin Islands.

Dated: May 24, 2000.

Andrew A. Rosenberg,

Deputy Assistant Administrator for Fisheries, National Marine Fisheries Service.

For the reasons set out in the preamble, 50 CFR part 622 is proposed to be amended as follows:

PART 622—FISHERIES OF THE CARIBBEAN, GULF, AND SOUTH ATLANTIC

1. The authority citation for part 622 continues to read as follows:

Authority: 16 U.S.C. 1801 *et seq.*

2. In § 622.4, the last two sentences of paragraph (a)(2)(iii), the last sentence of paragraph (a)(2)(iv), and paragraph (q) are revised to read as follows:

§ 622.4 Permits and fees.

(a) * * *

(2) * * *

(iii) * * * To obtain or renew a commercial vessel permit for king mackerel, at least 25 percent of the applicant's earned income, or at least $10,000, must have been derived from commercial fishing (i.e., harvest and first sale of fish) or from charter fishing during one of the 3 calendar years preceding the application. See paragraph (q) of this section regarding a moratorium on commercial vessel permits for king mackerel, transfers of permits during the moratorium, and

limited exceptions to the earned income or gross sales requirement for a permit.

(iv) * * * To obtain or renew a commercial vessel permit for Spanish mackerel, at least 25 percent of the applicant's earned income, or at least $10,000, must have been derived from commercial fishing (i.e., harvest and first sale of fish) or from charter fishing during one of the 3 calendar years preceding the application.

* * * * *

(q) *Moratorium on commercial vessel permits for king mackerel.* This paragraph (q) is effective through October 15, 2005.

(1) NMFS will not accept applications for additional commercial vessel permits for king mackerel. Existing vessel permits may be renewed, are subject to the restrictions on transfer or change in paragraphs (q)(2) through (q)(5) of this section, and are subject to the requirement for timely renewal in paragraph (q)(6) of this section.

(2) An owner of a permitted vessel may transfer a commercial vessel permit for king mackerel to another vessel owned by the same entity.

(3) An owner whose percentage of earned income or gross sales qualified him/her for a commercial vessel permit for king mackerel may request that NMFS transfer that permit to the owner of another vessel, or to the new owner when he or she transfers ownership of the permitted vessel. NMFS may issue a commercial vessel permit for king mackerel to such owner of another vessel, or new owner. NMFS may renew the permit through April 15 following the first full calendar year after the permit is transferred, without the owner meeting the percentage of earned income or gross sales requirement of paragraph (a)(2)(iii) of this section. However, to further renew the commercial vessel permit, the owner of the other vessel, or new owner, must meet the earned income or gross sales requirement not later than the first full calendar year after the permit is transferred.

(4) If a permit is based on an operator's earned income and, thus, is valid only when that person is the operator of the vessel, the owner of the vessel may request that NMFS transfer the permit to the income-qualifying operator if such operator becomes an owner of a vessel.

(5) If a permit is based on an operator's earned income and, thus, is valid only when that person is the operator of the vessel, the owner of the vessel may request that NMFS remove the operator qualification on the permit by returning the original permit to the RA with an application for the changed permit. NMFS may renew the permit without such qualification through April 15 following the first full calendar year after NMFS removes the operator qualification, without the owner meeting the earned income or gross sales requirement of paragraph (a)(2)(iii) of this section. However, to further renew the commercial vessel permit, the owner must meet the earned income or gross sales requirement not later than the first full calendar year after NMFS removes the operator qualification.

(6) NMFS will not reissue a commercial vessel permit for king mackerel if the permit is revoked or if the RA does not receive an application for renewal within 1 year of the permit's expiration date.

§§ 622.2, 622.6, 622.41, 622.44 [Amended]

3. In addition to the amendments set forth above, in 50 CFR part 622, remove the word ''Dade'' and add, in its place, the words ''Miami-Dade'' in the following places:

(a) Section 622.2, in paragraph (2) of the definition of ''Migratory group'';

(b) Section 622.6(b)(2);

(c) Section 622.41(c)(3)(ii)(B); and

(d) Section 622.44(a)(1)(iii).

[FR Doc. 00–13572 Filed 5–31–00; 8:45 am]

BILLING CODE 3510–22–F

Notices

Federal Register

Vol. 65, No. 106

Thursday, June 1, 2000

This section of the FEDERAL REGISTER contains documents other than rules or proposed rules that are applicable to the public. Notices of hearings and investigations, committee meetings, agency decisions and rulings, delegations of authority, filing of petitions and applications and agency statements of organization and functions are examples of documents appearing in this section.

DEPARTMENT OF AGRICULTURE

Grain Inspection, Packers and Stockyards Administration

[00–02–a]

Opportunity for Designation in the Virginia, Frankfort (IN), and Indianapolis (IN) Areas, and Request for Comments on the Official Agencies Serving These Areas

AGENCY: Grain Inspection, Packers and Stockyards Administration (GIPSA).

ACTION: Notice.

SUMMARY: The designations of the official agencies listed below will end in January and February 2001. GIPSA is asking persons interested in providing official services in the areas served by these agencies to submit an application for designation. GIPSA is also asking for comments on the services provided by these currently designated agencies:

Virginia Department of Agriculture and Consumer Services (Virginia);
Frankfort Grain Inspection, Inc. (Frankfort); and
Indianapolis Grain Inspection and Weighing Service, Inc. (Indianapolis).

DATES: Applications and comments must be postmarked or sent by telecopier (FAX) on or before June 30, 2000.

ADDRESSES: Applications may be obtained at www.usda.gov/gipsa/, under Designation Application Forms. Applications and comments must be submitted to USDA, GIPSA, Janet M. Hart, Chief, Review Branch, Compliance Division, STOP 3604, Room 1647–S, 1400 Independence Avenue, SW., Washington, DC 20250–3604. If an application or comment is submitted by FAX, 202–690–2755, GIPSA reserves the right to request an original application. All applications and comments will be made available for public inspection at this address located at 1400 Independence Avenue, S.W., during regular business hours.

FOR FURTHER INFORMATION CONTACT: Janet M. Hart at 202–720–8525.

SUPPLEMENTARY INFORMATION: This Action has been reviewed and determined not to be a rule or regulation as defined in Executive Order 12866 and Departmental Regulation 1512–1; therefore, the Executive Order and Departmental Regulation do not apply to this Action.

Section 7(f)(1) of the United States Grain Standards Act, as amended (Act), authorizes GIPSA's Administrator to designate a qualified applicant to provide official services in a specified area after determining that the applicant is better able than any other applicant to provide such official services.

Section 7(g)(1) of the Act provides that designations of official agencies shall end not later than triennially and may be renewed according to the criteria and procedures prescribed in Section 7(f) of the Act.

1. Current Designations Being Announced for Renewal

Official agency	Main office	Current designation terms
Virginia	Richmond, VA	02/01/1998–01/31/2001
Frankfort	Frankfort, IN	03/01/1998–02/28/2001
Indianapolis	Indianapolis, IN	03/01/1998–02/28/2001

a. Pursuant to Section 7(f)(2) of the Act, the following geographic area, the entire State of Virginia, except those export port locations within the State, is assigned to Virginia.

b. Pursuant to Section 7(f)(2) of the Act, the following geographic area, in the State of Indiana, is assigned to Frankfort.

Bounded on the North by the northern Fulton County line;

Bounded on the East by the eastern Fulton County line south to State Route 19; State Route 19 south to State Route 114; State Route 114 southeast to the eastern Fulton and Miami County lines; the northern Grant County line east to County Highway 900E; County Highway 900E south to State Route 18; State Route 18 east to the Grant County line; the eastern and southern Grant County lines; the eastern Tipton County line; the eastern Hamilton County line south to State Route 32;

Bounded on the South by State Route 32 west to the Boone County line; the eastern and southern Boone County lines; the southern Montgomery County line; and

Bounded on the West by the western and northern Montgomery County lines; the western Clinton County line; the western Carroll County line north to State Route 25; State Route 25 northeast to Cass County; the western Cass and Fulton County lines.

Frankfort's assigned geographic area does not include the following grain elevators inside Frankfort's area which have been and will continue to be serviced by the following official agency: Titus Grain Inspection, Inc.: The Andersons, Delphi, Carroll County; Frick Services, Inc., Leiters Ford, Fulton County; and Cargill, Inc., Linden, Montgomery County.

c. Pursuant to Section 7(f)(2) of the Act, the following geographic area, in the State of Indiana, is assigned to Indianapolis.

Bartholomew; Brown; Hamilton, south of State Route 32; Hancock; Hendricks; Johnson; Madison, west of State Route 13 and south of State Route 132; Marion; Monroe; Morgan; and Shelby Counties.

2. Opportunity for Designation

Interested persons, including Virginia, Frankfort, and Indianapolis are hereby given the opportunity to apply for designation to provide official services in the geographic areas specified above under the provisions of Section 7(f) of the Act and section 800.196(d) of the regulations issued thereunder. Persons wishing to apply for designation should contact the Compliance Division at the address listed above for forms and information.

Designation Terms

Virginia
02/01/2001–12/31/2003
Frankfort and Indianapolis
03/01/2001–12/31/2003

3. Request for Comments

GIPSA also is publishing this notice to provide interested persons the opportunity to present comments on the Virginia, Frankfort, and Indianapolis official agencies. Commenters are encouraged to submit pertinent data concerning the Virginia, Frankfort, and Indianapolis official agencies including information on the timeliness, cost, quality, and scope of services provided. All comments must be submitted to the Compliance Division at the above address.

Applications, comments, and other available information will be considered in determining which applicant will be designated.

Authority: Pub. L. 94–582, 90 Stat. 2867, as amended (7 U.S.C. 71 *et seq.*).

Dated: May 17, 2000.

Neil E. Porter,

Director, Compliance Division.

[FR Doc. 00–13322 Filed 5–31–00; 8:45 am]

BILLING CODE 3410–EN–P

COMMISSION ON CIVIL RIGHTS

Agenda and Notice of Public Meeting of the District of Columbia Advisory Committee

Notice is hereby given, pursuant to the provisions of the rules and regulations of the U.S. Commission on Civil Rights, that a meeting of the District of Columbia Advisory Committee to the Commission will convene at 8:30 a.m. and adjourn at 12:30 p.m. on Tuesday, June 20, 2000, at the U.S. Commission on Civil Rights, 5th Floor Conference Room (Room 540), 624 9th Street N.W., Washington, DC 20425. The Committee will develop questions for prospective panelists in preparation for its upcoming forum on access to financial services in the District of Columbia, and plan future activities.

Persons desiring additional information, or planning a presentation to the Committee, should contact Committee Chairperson Lewis M. Anthony, 202–483–3262, or Ki-Taek Chun, Director of the Eastern Regional Office, 202–376–7533 (TDD 202–376–8116). Hearing-impaired persons who will attend the meeting and require the services of a sign language interpreter should contact the Regional Office at least ten (10) working days before the scheduled date of the meeting.

The meeting will be conducted pursuant to the provisions of the rules and regulations of the Commission.

Dated at Washington, DC.

Lisa M. Kelly,

Special Assistant to the Staff Director, Regional Programs Coordination Unit.

[FR Doc. 00–13676 Filed 5–31–00; 8:45 am]

BILLING CODE 6335–01–F

COMMISSION ON CIVIL RIGHTS

Agenda and Notice of Public Meeting of the New Jersey Advisory Committee

Notice is hereby given, pursuant to the provisions of the rules and regulations of the U.S. Commission on Civil Rights, that a meeting of the New Jersey Advisory Committee to the Commission will convene at 9:30 a.m. and adjourn at 4:00 p.m. on Friday, June 30, 2000, at the Delaware River Port Authority, Multipurpose Room, 11th Floor, One Port Center, Two River Drive, Camden, New Jersey 08103. The purpose of the meeting is to gather information on (1) the State civil rights enforcement effort and (2) the racial profiling by law enforcement officers in New Jersey. The Committee will also plan and review project activities.

Persons desiring additional information, or planning a presentation to the Committee, should contact Ki-Taek Chun, Director of the Eastern Regional Office, 202–376–7533 (TDD 202–376–8116). Hearing-impaired persons who will attend the meeting and require the services of a sign language interpreter should contact the Regional Office at least ten (10) working days before the scheduled date of the meeting.

The meeting will be conducted pursuant to the provisions of the rules and regulations of the Commission.

Dated at Washington, DC.

Lisa M. Kelly,

Special Assistant to the Staff Director.

[FR Doc. 00–13677 Filed 5–31–00; 8:45 am]

BILLING CODE 6335–01–F

COMMISSION ON CIVIL RIGHTS

Agenda and Notice of Public Meeting of the New York State Advisory Committee

Notice is hereby given, pursuant to the provisions of the rules and regulations of the U.S. Commission on Civil Rights, that a meeting of the New York State Advisory Committee to the Commission will convene at 12:30 p.m. and adjourn at 5:00 p.m. on Thursday, June 22, 2000, at the Sheraton University Hotel, 801 University Avenue, Syracuse, NY 13210. The Committee will (1) review its project proposal, *Police-Community Relations* in New York (2) plan a series of forums around the state based on the proposal and (3) be briefed by community advocates and officials on police-community relations in Syracuse.

Persons desiring additional information, or planning a presentation to the Committee, should contact Ki-Taek Chun, Director of the Eastern Regional Office, 202–376–7533 (TDD 202–376–8116). Hearing-impaired persons who will attend the meeting and require the services of a sign language interpreter should contact the Regional Office at least ten (10) working days before the scheduled date of the meeting.

The meeting will be conducted pursuant to the provisions of the rules and regulations of the Commission.

Dated at Washington, DC, May 25, 2000.

Lisa M. Kelly,

Special Assistant to the Staff Director, Regional Programs Coordination Unit.

[FR Doc. 00–13678 Filed 5–31–00; 8:45 am]

BILLING CODE 6335–01–F

DEPARTMENT OF COMMERCE

Bureau of Export Administration

Transportation and Related Equipment Technical Advisory Committee Notice of Partially Closed Meeting

The Transportation and Related Equipment Technical Advisory Committee will meet on June 21, 2000, 9 a.m., in the Herbert C. Hoover Building, Room 3884, 14th Street between Constitution and Pennsylvania Avenues, NW, Washington, DC. The Committee advises the Office of the Assistant Secretary for Export Administration with respect to technical questions that affect the level of export controls applicable to transportation and related equipment or technology.

Public Session

1. Election of Chairman.
2. Presentation of public papers or comments.
3. Update on status of Wassenaar Arrangement proposals.
4. Update on Missile Technology Control Regime.
5. Report on Bureau of Export Administration initiatives.
6. Discussion of possible Commerce Control List changes.

Closed Session

7. Discussion of matters properly classified under Executive Order 12958, dealing with the U.S. export control program and strategic criteria related thereto.

A limited number of seats will be available during the public session of the meeting. Reservations are not accepted. To the extent time permits, members of the public may present oral statements to the Committee. The public may submit written statements at any time before or after the meeting. However, to facilitate distribution of public presentation materials to Committee members, the Committee suggests that the public forward the materials prior to the meeting to the following address: Ms. Lee Ann Carpenter, OSIES/EA/BXA, MS: 3876, U.S. Department of Commerce, 14th St. & Constitution Ave., NW, Washington, DC 20230.

The Assistant Secretary for Administration, with the concurrence of the delegate of the General Counsel, formally determined on January 12, 1999, pursuant to section 10(d) of the Federal Advisory Committee Act, as amended, that the series of meetings or portions of meetings of the Committee and of any Subcommittee thereof, dealing with the classified materials listed in 5 U.S.C. 552(c) (1) shall be exempt from the provisions relating to public meeting found in section 10(a) (1) and (a)(3) of the Federal Advisory Committee Act. The remaining series of meetings or portions thereof will be open to the public.

A copy of the Notice of Determination to close meetings or portions of meetings of the Committee is available for public inspection and copying in the Central Reference and Records Inspection Facility, Room 6020, U.S. Department of Commerce, Washington, DC. For further information or copies of the minutes call (202) 482–2583.

Dated: May 26, 2000.

Lee Ann Carpenter,

Committee Liaison Officer.

[FR Doc. 00–13740 Filed 5–31–00; 8:45 am]

BILLING CODE 3510–JT–M

DEPARTMENT OF COMMERCE

International Trade Administration

[A–570–848]

Freshwater Crawfish Tail Meat From the People's Republic of China: Initiation of New-Shipper Antidumping Administrative Review

AGENCY: Import Administration, International Trade Administration, Department of Commerce.

ACTION: Notice of initiation of new-shipper antidumping administrative review.

SUMMARY: The Department of Commerce (the Department) has received a request from China Kingdoma Import & Export Co., Ltd. (China Kingdoma), Rizhao Riyuan Marine and Food Products Co., Ltd. (Rizhao Riyuan), Nantong Shengfa Frozen Food Co., Ltd. (Nantong Shengfa), and Weshan Fukang Foodstuffs Co., Ltd. (Weishan Fukang) to conduct new-shipper administrative reviews of the antidumping duty order on freshwater crawfish tail meat from the People's Republic of China (PRC). In accordance with the Department's current regulations, we are initiating this administrative review.

EFFECTIVE DATE: June 1, 2000.

FOR FURTHER INFORMATION CONTACT: Thomas Gilgunn or Maureen Flannery, AD/CVD Enforcement, Import Administration, International Trade Administration, U.S. Department of Commerce, 14th Street and Constitution Avenue, N.W., Washington, D.C. 20230; telephone: (202) 482–0648 or (202) 482–3020, respectively.

The Applicable Statute and Regulations

Unless otherwise indicated, all citations to the statute are references to the provisions effective January 1, 1995, the effective date of the amendments made to the Tariff Act of 1930 (the Act) by the Uruguay Round Agreements Act. In addition, unless otherwise indicated, all citations to the Department's regulations are to the current regulations, codified at 19 CFR Part 351, (1999).

Background

On March 29, 2000 and March 31, 2000, the Department received timely requests, in accordance with section 751 (a)(2)(B) of the Act and 19 CFR 351.214(c), for new shipper reviews of this antidumping duty order which has a September anniversary date.

Initiation of Review

In its March 29, 2000 request for review, Rizhao Riyuan certified that it did not export the subject merchandise to the United States during the period of investigation (POI) and that it is not affiliated with any company which exported subject merchandise to the United States during the POI. Rizhao Riyuan further certified that its export activities are not controlled by the central government of the PRC.

In its March 29, 2000 request for review, Nantong Shengfa certified that it did not export the subject merchandise to the United States during the POI and that it is not affiliated with any company which exported subject merchandise to the United States during the POI. Nantong Shengfa further certified that its export activities are not controlled by the central government of the PRC.

In its March 31, 2000 request for review, China Kingdoma certified that it did not export the subject merchandise to the United States during the POI and that it is not affiliated with any company which exported subject merchandise to the United States during the POI. China Kingdoma further certified that its export activities are not controlled by the central government of the PRC.

In its March 31, 2000 request for review, Weishan Fukang certified that it did not export the subject merchandise to the United States during the POI and that it is not affiliated with any company which exported subject merchandise to the United States during the POI. Weishan Fukang further certified that its export activities are not controlled by the central government of the PRC. All of the above requests also included all documentation required under 19 C.F.R. 351.214(b)(2)(iv).

In accordance with section 751(a)(2)(B) and 19 CFR 351.214(d), we are initiating new-shipper reviews of the antidumping duty order on freshwater crawfish tail meat from the PRC.

In accordance with 19 CFR 351.214(g)(B) of the Department's regulations, the period of review (POR) for a new-shipper review initiated in the month immediately following the semiannual anniversary month will be the six-month period immediately preceding the semiannual anniversary month. Therefore, the POR for these new-shippers is:

Antidumping duty proceeding	Period to be reviewed
Fresh Water Crawfish Tail Meat from the PRC, A–570–848:	
China Kingdoma Import & Export Co., Ltd	9/01/99–2/29/00
Rizhao Riyuan Marine and Food Products Co. Ltd	9/01/99–2/29/00
Nantong Shengfa Frozen Food Co., Ltd	9/01/99–2/29/00
Weshan Fukang Foodstuffs Co., Ltd	9/01/99–2/29/00

Concurrent with publication of this notice and in accordance with 19 CFR 351.214(e), we will instruct the U.S. Customs Service to allow, at the option of the importer, the posting of a bond or security in lieu of a cash deposit for each entry of the merchandise exported by the companies listed above, until the completion of the review.

The interested parties must submit applications for disclosure under administrative protective order in accordance with 19 CFR 351.305 and 351.306.

This initiation and notice are in accordance with section 751(a) of the Act (19 U.S.C. 1675(a)) and 19 CFR 351.214.

Dated: May 25, 2000.

Edward C. Yang,

Acting Deputy Assistant Secretary, Ad/CVD Enforcement Group III.

[FR Doc. 00–13709 Filed 5–31–00; 8:45 am]

BILLING CODE 3510–DS–P

DEPARTMENT OF COMMERCE

National Oceanic and Atmospheric Administration

[I.D. 121699A]

Small Takes of Marine Mammals Incidental to Specified Activities; San Francisco-Oakland Bay Bridge, Pile Installation Demonstration Project, San Francisco Bay, CA

AGENCY: National Marine Fisheries Service (NMFS), National Oceanic and Atmospheric Administration (NOAA), Commerce.

ACTION: Notice of issuance of an incidental harassment authorization.

SUMMARY: In accordance with provisions of the Marine Mammal Protection Act (MMPA) as amended, notification is hereby given that an Incidental Harassment Authorization (IHA) has been issued to the Federal Highway Administration (FHWA), on behalf of the California Department of Transportation (CALTRANS), to take small numbers of Pacific harbor seals and California sea lions, by harassment, incidental to a pile installation demonstration project (PIDP) at the San Francisco-Oakland Bay Bridge (SF–OBB), San Francisco Bay (the Bay), CA.

DATES: This authorization is effective from May 23, 2000, through May 22, 2001.

ADDRESSES: A copy of the application may be obtained by writing to Donna Wieting, Chief, Marine Mammal Conservation Division, Office of Protected Resources, National Marine Fisheries Service, 1315 East-West Highway, Silver Spring, MD 20910–3225, or by telephoning one of the contacts listed here.

FOR FURTHER INFORMATION CONTACT: Kenneth R. Hollingshead, Office of Protected Resources, NMFS, (301) 713–2055, or Christina Fahy, Southwest Regional Office, NMFS, (562) 980–4023.

SUPPLEMENTARY INFORMATION:

Background

Section 101(a)(5)(A) and (D) of the MMPA (16 U.S.C. 1361 *et seq.*) direct the Secretary of Commerce to allow, upon request, the incidental, but not intentional, taking of small numbers of marine mammals by U.S. citizens who engage in a specified activity (other than commercial fishing) within a specified geographical region if certain findings are made and either regulations are issued or, if the taking is limited to harassment, a notice of a proposed authorization is provided to the public for review.

Permission may be granted if NMFS finds that the taking will have a negligible impact on the species or stock(s) and will not have an unmitigable adverse impact on the availability of the species or stock(s) for subsistence uses, and if the permissible methods of taking and requirements pertaining to the monitoring and reporting of such takings are set forth. NMFS has defined ''negligible impact'' in 50 CFR 216.103 as ''... an impact resulting from the specified activity that cannot be reasonably expected to, and is not reasonably likely to, adversely affect the species or stock through effects on annual rates of recruitment or survival.''

Subsection 101(a)(5)(D) of the MMPA established an expedited process by which citizens of the United States can apply for an authorization to incidentally take small numbers of marine mammals by harassment. The MMPA now defines ''harassment'' as:

> ...any act of pursuit, torment, or annoyance which (a) has the potential to injure a marine mammal or marine mammal stock in the wild; or (b) has the potential to disturb a marine mammal or marine mammal stock in the wild by causing disruption of behavioral patterns, including, but not limited to, migration, breathing, nursing, breeding, feeding, or sheltering.

Subsection 101(a)(5)(D) establishes a 45-day time limit for NMFS review of an application followed by a 30-day public notice and comment period on any proposed authorizations for the incidental harassment of small numbers of marine mammals. Within 45 days of the close of the comment period, NMFS must either issue or deny issuance of the authorization.

Summary of Request

On November 22, 1999, NMFS received an application from the FHWA on behalf of CALTRANS, requesting an IHA for the possible harassment of small numbers of Pacific harbor seals (*Phoca vitulina*), and California sea lions (*Zalophus californianus*) incidental to conducting the PIDP at the SF–OBB.

CALTRANS is currently in the planning stages of the SF–OBB East Span Seismic Safety Project (ESSSP). The ESSSP would include driving large piles into the Bay bottom. One of the hammers anticipated to be used for this task is larger than any pile-driving hammer previously used in the Bay. Due to the untested nature of these hammers and piles in the Bay, a pile installation demonstration is needed. The PIDP will provide CALTRANS with an opportunity to measure resulting sound pressure levels (SPL), both in air and under water, record impacts to marine mammals and experiment with measures to reduce potential harm to marine mammals prior to general use on SF–OBB piles.

The PIDP site is located between Yerba Buena Island (YBI) and Oakland, in the area to the north of and between existing SF–OBB east span piers E6 and E9 (see figures 1 and 2 of the application). The PIDP site is approximately 2.0 km (1.24 mi) from northeast of the YBI harbor seal haul-out site, which is located immediately to the west of the lighthouse on the southernmost tip of the island.

The anticipated pier foundations for the ESSSP will consist of large diameter (up to 110–m (361–ft) long), steel pipe piles that will be driven into the Bay floor. Current plans anticipate using 2.5–m (8.2–ft) diameter piles for a majority of the foundations and smaller 1.5–m (4.9–ft) diameter pipe piles for others.

Accurately predicting the characteristics of pile driving prior to field-testing is not possible because piles of this size and length have not previously been installed in Bay substrates and there is limited experience with driving piles of this size. Therefore, given the unprecedented nature of this work in the Bay, this PIDP will provide CALTRANS with an opportunity to gather important data regarding in-air and underwater SPLs generated by the pile driving activities. In addition, it will also provide an opportunity to gather data from experimental measures to attenuate elevated SPLs, thereby reducing the potential for harm to marine mammals. Information obtained from this demonstration potentially may prove valuable for forecasting anticipated impacts of pile installation activities associated with the larger ESSSP construction, which will require the installation of approximately 350 piles of variable diameter.

Project Description

The PIDP includes driving three full-scale steel pipe piles (2.438 m (8.0 ft) in diameter, 110 m (361 ft) long) at two locations (two at a primary site and one at an alternate site) near the existing SF–OBB east span alignment. Each pile consists of four segments of variable length and wall thickness that will each be driven, subsequently welded to another segment, and driven again until the full desired length and depth of the pile is achieved. Due to the nature of this work, the majority of the project time will be spent on surface support activities, such as picking up the pile segments, placing the segment in the correct spot and welding the segments together. Actual pile driving will only occur for a small fraction of the project's duration. Please refer to the CALTRANS application for a complete description of the pile driving order of work.

Piles will be driven open-ended by hydraulic or steam hammers. These are large offshore hammers capable of driving large-diameter, thick-walled steel pipe piles. No other types of hammers (e.g. drop hammers, diesel hammers or vibratory hammers) will be used on this project. According to project specifications, two sizes of hammers are required. A ''smaller'' hammer having a maximum rated energy of not less than 500 kilojoules (kJ) but not more than 1,000 kJ will be used to drive initial segments of the piles. This hammer will be similar in size to the pile driving hammer that was used for activities associated with the retrofitting of the San Mateo-Hayward Bridge, also in the Bay. A larger hammer, having a maximum rated energy of not less than 1,700 kJ will be employed to drive subsequent segments of each pile. No upper limit is placed on the maximum rated energy of the larger hammer; however, there is little motivation to use a larger hammer than necessary unless there are no other hammers available at that time. Furthermore, the piles must be able to support the weight of the hammer, limiting the size of the hammer that can be used.

The PIDP is expected to take place in late summer 2000. All necessary equipment for the PIDP will be brought to the project site on barges, tugboats and other marine vessels. Due to the high cost of the equipment being used for this project and the nature of pile installation, work will need to proceed 24 hours a day, 7 days a week for approximately 20 days barring unforeseen circumstances (i.e. broken equipment, adverse weather conditions). Actual impact hammering will only occur for a total of about 12 to 16 hours over the estimated 20 days. Continuous impact hammering would likely occur for a maximum amount of 2–3 hours at a time when the fourth segment is being driven at an elevated energy level. As only 3 full-scale piles are being driven, this maximum would only be reached on 3 days out of the 20 days of the PIDP. The hammer is expected to hit the piles at an average rate of 30–45 blows per minute.

Due to the amount of time needed between driving consecutive pile segments, it is extremely unlikely that more than two segments will be driven in a 24–hour period. It is important to note that once the driving of a pile segment begins it cannot be halted until that segment has reached its desired depth. This is not only because of the expense of keeping the equipment idle but also due to the nature of the predominantly clay soil types underlying the Bay. As piles are driven, the soil gradually loses resistance. If driving is stopped, the soil has a chance to regain its strength, and resistance to the pile increases. This can make it more difficult or even impossible to continue driving the pile, particularly if the pile tip is in a highly resistant layer at that point. Consequently, once hammering resumes, it could potentially take a longer time at increased energy levels. This could amplify impacts to marine mammals, as they would endure potentially higher SPLs for longer periods of time. Pile segment heights and wall thickness have been specially designed for this project to take the location of highly resistant sediment layers into account, so that when work is stopped at the desired depths between segments, the pile tip is never resting in highly resistant sediment layers. In addition, stopping in the middle of pile driving a segment may interfere with the goal of understanding the characteristics of pile driving within this new setting. If pile driving is permitted to be regularly interrupted, meaningful data regarding how the piles behave may be difficult to obtain.

Comments and Responses

A notice of receipt of the application and proposed authorization was published on January 7, 2000 (65 FR 1083), and a 30-day public comment period was provided on the application and proposed authorization. Comments were received from the Marine Mammal Commission (MMC) and CALTRANS. The MMC believes that NMFS' preliminary determination that the activity would have no more than a negligible impact on affected pinniped stocks is reasonable and sufficiently supported by the information and analyses provided in the **Federal Register** notice and in CALTRANS' request for a small take authorization. The MMC also believes that the monitoring program is adequate to verify that only small numbers of marine mammals are taken, that the taking is by harassment only, and that the impacts on the affected species and stocks are negligible. CALTRANS provided editorial comments that have resulted in minor modifications to this document and several broader comments which are addressed here.

Comment 1: CALTRANS is concerned about the shape of the no-entry buffer zone around YBI. With the harbor seal haulout on the southwest side of the southern tip of the island, and a U.S. Coast Guard (USCG) facility on the southeast side, CALTRANS proposes modifying the no-entry buffer zone to exempt the area of the USCG facility because of the need for the USCG's search-and-rescue to access the surrounding waters. This would minimize the potential for interference with the operation of the USCG facility while protecting hauled-out seals from potential harassment by project-related vessels.

Response: NMFS notes that the revised YBI safety zone proposed by

CALTRANS is a 90–degree pie-shaped wedge with its southern limit extending southeasterly from the southern tip of YBI so that it encompasses an area within the seals' line of sight from the haul-out site, but not extending eastward around the southern tip of the island. NMFS believes however, that this proposal does not account for the harbor seal's line of sight to the southwest and west of the haulout. As a result, NMFS has established the western boundary of the YBI safety zone beginning at the first rock outcropping to the west of the seal haulout. However, it should be recognized that this mitigation measure does not supercede NMFS guidelines that require boats in California waters to remain at least 91 m (300 ft) from seals and sea lions that are on land or rocks. Therefore, in waters east and west of the CALTRANS' safety zone, NMFS' guideline provides additional protection to seals and sea lions that are ashore at YBI.

Comment 2: CALTRANS has requested USCG authorization for the placement of buoys around the haul-out site.

Response: NMFS understands that CALTRANS has two options: CALTRANS can either require contractors to stay out of the safety zone around the haul-out site, or it could buoy the area. However, if the area is buoyed, CALTRANS would have to go through the Private Aid to Navigation permitting process. Conditions of the permit would require notice to mariners because mariners may get confused if they see the buoys and do not know what they are for. Since the safety zone is primarily to reduce disturbance to marine mammals from the PIDP, and not for the exclusion of all boating activity, and because NMFS guidelines require boats in California waters must remain at least 91 m (300 ft) from seals and sea lions that are on land or rocks, NMFS does not consider buoying the area to be a required mitigation measure. CALTRANS can proceed on this issue as it chooses.

Comment 3: CALTRANS foresees a potential problem with a mitigation measure that it proposed in its application. Essentially, CALTRANS notes that there is no provision for proceeding with work if a marine mammal enters the safety zone and remains visible, or if a seal or sea lion dives and reappears in the safety zone within the 15–minute time limit. Would the project be delayed indefinitely while the contractor waits for the marine mammal to leave the safety zone? If so, and the proposed authorization does not allow the contractor to drive a marine mammal from the safety zone or lure it away from the zone, the mitigation may not be practical. However, CALTRANS does not advocate that such activities be added to its authorization.

Response: As noted by CALTRANS in its letter, harbor seals avoid human activity, California sea lions are unlikely to be in the vicinity of the project, and molting harbor seals will more likely be ashore than in the water at the time of the project. As a result, the scenario described by CALTRANS is not likely to occur. However, NMFS believes it would be inappropriate to include these types of intentional takings as a mitigation measure. If this develops into a problem, NMFS may take other action to resolve it.

Comment 4: CALTRANS proposes a modification to the proposed authorization that would allow a pile-driving operation to begin after the first 15-minute waiting period whether or not a marine mammal is within the safety zone. CALTRANS believes that 15 minutes is sufficient time for a marine mammal to move outside the safety zone and yet allow the contractor to have some assurance of being able to proceed within a reasonable time frame. CALTRANS also believes that this change should not alter NMFS' preliminary conclusion that the PIDP would have the potential to harass only a small number of marine mammals.

Response: In the proposed authorization, NMFS preliminarily concurred with CALTRANS that a safety zone should be established at a distance approximately 500 m (1,640 ft) from the PIDP. At this distance, CALTRANS estimated that the SPL from the pile driving would be 180 dB re 1 μPa-m_{RMS}. In its application, CALTRANS used guidance provided by NMFS that impulse-generated SPLs greater than 180 dB had the potential to cause a temporary threshold shift (TTS) in marine mammal hearing levels and that, at some unknown level above 180 dB, marine mammals had the potential to incur a permanent shift (i.e., elevation) in hearing thresholds. While the previous NMFS statement remains true in general, present scientific consensus indicates that a safe level for impulse sounds for pinnipeds from incurring TTS is higher than the level indicated for cetaceans. As a result, scientists have preliminarily established an SPL of 190 dB re 1 μPa-m_{RMS} as a safe level for pinnipeds underwater. NMFS adopts this information as the best scientific information available and will allow CALTRANS to establish a safety zone at the distance from the PIDP where the SPL diminishes to 190 dB re 1 μPa-m_{RMS}. However, in order to implement this provision, CALTRANS must measure the distance acoustically for each hammer used and, until this distance is measured and an appropriate safety zone implemented, CALTRANS must retain a safety zone of 180 dB re 1 μPa-m_{RMS}.

NMFS believes the smaller safety zone for pinnipeds will allow CALTRANS to remain on schedule. If problems arise, NMFS will consider other appropriate actions, as necessary.

Comment 5: CALTRANS has expressed concern with NMFS' proposal to require at least 50 percent of pile driving to be performed during daylight. CALTRANS believes that it will be nearly impossible to measure percentages of total pile driving time as construction proceeds. Instead, CALTRANS proposes that NMFS modify the previously mentioned monitoring measure and require pile driving ''episodes'' rather than total pile driving time. CALTRANS proposes to install the first 2 segments of each pile during daylight hours (for a total of 6 pile driving episodes). The third and fourth segments, which are the most likely to refuse or freeze, would be driven when ready (taking into account the 15–minute delay for marine mammal presence) and this may or may not be during daylight hours. CALTRANS further proposes to conduct all restriking of the piles (5 episodes) during daylight hours. The larger hammer would be required for restriking, thereby meeting the proposed requirement that both hammer sizes be used during daylight. Furthermore, while the hammer would operate for a shorter time during restriking, it would be more likely to operate at the highest capacity. It is probable that the hardest driving and thus the loudest noise would be generated during re-striking.

Response: As noted by CALTRANS in its letter, NMFS' intention for a requirement that 50 percent of strikings occur during the daytime was to obtain more meaningful data on seal and sea lion response to pile driving. As a result, NMFS concurs with the suggested modification.

Description of the Marine Mammals Affected by the Activity

General information on harbor seals, California sea lions, and other marine mammal species found in Central California waters can be found in Barlow *et al.* (1997, 1998). The marine mammals likely to be found in the SF–OBB area are limited to the California sea lion and harbor seal.

California Sea Lions

While California sea lions are known to have historically used the Bay, they are rarely observed hauled out in the Bay (Bauer, 1999). However, since at least 1987, sea lions have been observed occupying the docks near Pier 39 in San Francisco, about 5.7 km (3.5 mi) from the project site. The number of sea lions hauled out at Pier 39 ranged from 63 to 737 in 1998 and from 5 to 906 in 1997 (Marine Mammal Center, Sausalito data). For both years, the lows occurred in June and the highs occurred in August. Most recently, 831 sea lions were observed on K dock at Pier 39 in October 1999. While they are present in large numbers, approximately 85 percent of the animals hauled out at this site are males, and no pupping has been observed at this site or any other site in the Bay (Lander pers. comm. to CALTRANS, 1999). At this time, no other sea lion haul-out sites have been identified in the Bay. About 90 percent of the U.S. stock breeds on the southern California Channel Islands, over 483 km (300 mi) from the PIDP site (Schoenherr, 1995; Howorth and Abbott, 1999). Pier 39 has now become a regular haul-out site for sea lions. The sea lions, most of whom are male, appear at the site after returning from the Channel Islands at the beginning of August (Bauer, 1999). Around late spring, sea lions begin to travel south to the breeding grounds, and numbers at the haul-out site decline. Lowest numbers of sea lions are usually observed from May through July. Numbers of sea lions at the haul-out site fluctuate quite a bit throughout the year and even from one week to the next. For example, in June of 1998, a maximum of 574 sea lions was observed on June 7th while a low count of 63 was observed on June 25th (Lander pers. comm. to CALTRANS, 1999).

While little information is available on the foraging patterns of California sea lions in the Bay, individual sea lions have been observed feeding in the shipping channel to the south of YBI on a fairly regular basis (Grigg pers. comm. to CALTRANS, 1999). Foraging by sea lions that utilize the Pier 39 haul-out site primarily occurs in the Bay, where they feed on Pacific herring, northern anchovy and sardines, among other prey (Hanni, 1995).

Pacific Harbor Seals

Pacific harbor seals are the only species of marine mammal that breed and bear young in the Bay (Howorth and Abbott, 1999). There are 12 haul-out sites and rookeries in the Bay and of those, only eight are used by more than a few animals at a time. Only three sites in the Bay are regularly used by more than 40 harbor seals at any one time; these are Mowry Slough, located in the South Bay, YBI, and Castro Rocks, located in the Central Bay (Spencer, 1997). The three closest haul-out sites to the project location are at YBI, Angel Island, and Castro Rocks. The most recent aerial harbor seal count, conducted this year by D. Hanan of the California Department of Fish and Game, found 477 individuals in the Bay (Green pers. comm. to CALTRANS, 1999). It is important to note that not all harbor seals were counted, as some may have been under water during the survey.

Harbor seals are present in the Bay year-round and use it for foraging, resting and reproduction. Peak numbers of hauled-out harbor seals vary by haul-out site depending on the season. Results of a study of 39 radio-tagged harbor seals in the Bay found that most active diving occurred at night and a majority of the diving time was spent in seven feeding areas in the Bay. The two feeding areas located closest to the project site are just to the south of YBI and north of Treasure Island. This study also found that the seals dove for a mean time of 0.50 minutes to 3.33 minutes. Mean surface intervals or the mean time the seals spent at the surface between dives ranged from 0.33 minutes to 1.04 minutes. Mean haul-out periods ranged from 80 minutes to 24 hours (Harvey and Torok, 1994).

Pupping season in the Bay begins in mid-March and continues until about mid-May. Pups nurse for only 4 weeks and mating begins after pups are weaned. In the Bay, mating occurs from April to July and molting season is from June until August (Schoenherr, 1995; Kopec and Harvey, 1995).

Haul-Out Sites in the Vicinity of the PIDP

YBI is located in the Central Bay, adjacent to man-made Treasure Island. The SF–OBB passes through a tunnel on YBI. An important harbor seal haul-out site is located on a rocky beach on the southwest side of YBI (Kopec and Harvey, 1995). Work for the PIDP will be performed approximately 2 km (1.24 mi) from this harbor seal haul-out site, facing the northeast side of the island.

Although seals haul out year-round on YBI, it is not considered a pupping site for harbor seals as no births have been observed at the site. Occasionally, pups have been seen at an average of 1 pup per year, though more recently, 7 pups were observed at one time in May, 1999 (San Francisco State University unpublished records, 1998–9). In a study of the haul-out site conducted between 1989 and 1992, males comprised 83.1 percent of the seals whose gender could be determined (Spencer, 1997). Peak numbers of harbor seals at this haul-out site have been observed from November to February. The maximum reported number of seals hauled out at one time is 344, counted in January 1992 (Kopec and Harvey, 1995). More recently, the number of seals counted at YBI ranged from 0 to 296 for the period May 1998 to present. The maximum count of 296 was recorded in January 1999. Mean monthly counts for the same period range from 14.5 in September 1998 to 107.3 in June 1999 (San Francisco State University, unpublished records 1998–9). The abundance of harbor seals at this site during the winter months likely coincides with the presence of spawning Pacific herring near the island. Re-sightings at the haul-out site indicate long-term usage of the site (Spencer, 1997).

Angel Island is a small haul-out site located approximately 7.4 km (4.6 mi) from the project site. A maximum count of 15 seals was observed in the 1980s, and more recently, six harbor seals were seen in 1989. No pupping has been observed at the site.

The next closest haul-out site is approximately 14 km (8.7 mi) away at Castro Rocks, near the Richmond end of the Richmond-San Rafael Bridge. The Castro Rocks haul-out site is a recognized pupping site. A maximum of 176 harbor seals were observed at Castro Rocks in October 1999 (San Francisco State University unpublished records, 1998–9).

Potential Effects on Marine Mammals

It is possible that California sea lions and harbor seals swimming in the project vicinity may be subject to elevated SPLs that could produce a temporary shift in the animal's hearing threshold. Pile driving noise and human activity around the PIDP could also potentially result in behavioral changes in nearby pinnipeds. California sea lions and harbor seals may temporarily cease normal activities, such as feeding, or pop their heads up above water in response to the noise. They may also be curious and choose to investigate the project site. However, existing evidence shows that most marine mammals tend to avoid loud noises (Richardson, personal communication to CALTRANS, 1999). It is likely then that harbor seals and sea lions in the water in the project vicinity may be temporarily displaced if they choose to avoid the area in response to the high SPLs. Due to the short-term nature of the pile driving (approximately 12 to 16

hours over 20 days) and its distance from the YBI haul-out site, the PIDP is not expected to result in long-term behavioral impacts to Bay seals or sea lions.

Based on in-air hammer noise measurements conducted elsewhere, the average received SPLs were 107 dB re 20 μPa measured at 10–20 meters (33–66 feet) from the hammer and between 70 dB and 44 dB re 20 μPa at 2,400 meters (7,874 feet or 1.5 miles) from the hammer. While a direct comparison is not possible due to different atmospheric and geographic conditions, it is anticipated that in-air noise levels at the YBI haul-out site, located approximately 2.0 km (1.24 miles) from the project site and physically shielded by the island, will attenuate to levels insufficient to cause injury to the seals and sea lions. It is also likely that harbor seals at this site will not be disturbed by the sound and leave the beach for the water, although they will most likely hear the pile driving noise.

Consequently, while it is likely that hauled-out marine mammals will hear the pile driving activities, noise levels are not expected to adversely impact them. Impact hammering could potentially harass those harbor seals that are in the water closer to the project site, whether their heads are above or below the surface. Potential impacts could include a temporary elevation in hearing threshold and/or changes in behavior patterns. However, potential harassment would only occur during those times when piles are being hammered, estimated at approximately 12 to 16 hours over 20 days.

It is difficult to estimate the number of California sea lions that could potentially be affected by the PIDP due to the lack of information on the number of sea lions in the Bay except for the Pier 39 haul-out site. However, assuming the sea lion population at Pier 39 starts to decline in the late spring as the sea lions migrate south to the rookeries, only a fraction of the animals would be left in the Bay at the time of the PIDP (late summer 2000). According to the Marine Mammal Center in Sausalito, the maximum number of sea lions observed at the Pier 39 haul-out site during the spring and summer seasons was 820 in April 1999. The mean numbers of sea lions observed at Pier 39 during spring and summer seasons were 340 in 1998 and 453 in 1997 (Lander, personal communication to CALTRANS, 1999). Because the Pier 39 haul-out site is located 5.7 km (3.5 mi) away from the project site, only a fraction of those sea lions left in the Bay at the time of the project could potentially be in the project vicinity at any one time. Although California sea lions are known to forage in groups, available evidence suggests that they are not regularly seen in groups in the Bay waters near the PIDP site. In surveys conducted from May 1998 to the present, sea lions have been observed foraging in the shipping channel to the south of YBI. However, these sea lions are typically alone and do not seem to be associated with any other sea lions (Grigg, personal communication 1999). Given this anecdotal evidence, the number of sea lions expected to be present at the PIDP site during pile driving activities is expected to be low.

Noise levels from the project are not expected to result in harassment of the sea lions hauled out at Pier 39 as SPLs would be expected to attenuate by the time they reach the haul-out site, 5.7 kilometers (3.5 miles) from the project site. As most of the sea lions observed at Pier 39 are males, and the project will occur during the time when females and adult males are in waters off southern California for the breeding and pupping season, it is anticipated that most of the California sea lions impacted would be subadult males.

Kopec and Harvey (1995) reported harbor seal counts for several haul-out sites in the Bay for the period 1989–1992.

Peak numbers of harbor seals haul out at YBI in the winter months. The maximum recorded number of harbor seals observed at YBI is 344, recorded in January 1992. The PIDP is likely to occur in late summer of 2000. According to Kopec and Harvey (1995), the maximum number of seals observed at the YBI haul-out site during the pupping season (March–July) was 127 in 1992. More recently, for the same season, the Richmond Bridge Harbor Seal Survey reported a maximum count of 213 harbor seals observed in July 1998 (San Francisco State University, unpublished records 1998–9). Kopec and Harvey reported mean harbor seal numbers of 35.7, 41.1, 63.5 and 65.6 during the pupping seasons (March 15–May 31) of 1989 to 1992, respectively (1995). The mean number of harbor seals observed during the pupping and molting seasons (March 15 to August 15) in 1998 and 1999 were 75.2 and 78.4, respectively (San Francisco State University, unpublished records 1998–9). Keeping in mind that these mean counts were taken for slightly different periods of time (March–July in 1989–1992 and March–August in 1998–1999) and the number of surveys taken varies by count, the average of the mean counts is 60.

Mitigation

Based upon previous discussion in this document, CALTRANS will establish a safety zone around the pile driving site. The safety zone is intended to include all areas where the underwater sound pressure levels are anticipated to equal or exceed 190 dB re 1 μPa_{RMS}. Once pile driving begins, SPLs will be recorded to determine where this radius should be established. It is anticipated that safety zone radii will differ between the larger and smaller hammers.

Before pile driving of a pile segment begins, NMFS-approved observers on boats will survey the safety zone to ensure that no marine mammals are seen within the zone. If marine mammals are found within the safety zone, pile driving of the segment will be delayed until they move out of the area. If a marine mammal is seen above water and then dives below, the contractor will wait 15 minutes and if no marine mammals are observed in that time it will be assumed that the animal has moved beyond the safety zone. Harbor seals in the Bay are known to dive for a mean time of 0.50 minutes to 3.33 minutes (Harvey and Torok, 1994). However, due to the limitations of monitoring from a boat, there can be no assurance that the safety zone will be devoid of all marine mammals. If the presence of seals or sea lions within the safety zone seriously compromises CALTRANS' activity, CALTRANS will contact the Regional Administrator, NMFS, for appropriate resolution.

If marine mammals enter the safety zone after pile driving of a segment has commenced, hammering will continue unabated and marine mammal observers will monitor and record their numbers and behavior. For reasons mentioned previously, once the pile driving of a segment begins it cannot be stopped until that segment has reached its predetermined depth due to the nature of the sediments underlying the Bay.

Pile driving will be restricted to times when the safety zone can be monitored for 15 minutes immediately prior to the start-up of pile driving. Also, in order to obtain information on the behavioral effects to harbor seals and California sea lions, NMFS will require that, to the maximum extent practicable, a minimum of 50 percent of the 17 pile driving episodes be scheduled during daylight hours. Daylight pile driving must include both hammer types. In order to meet this mitigation measure, CALTRANS will drive the first two segments of each pile in daylight; the third and fourth segment of each pile will be driven when ready; and all

restriking of the piles will be performed in daylight.

A 500–m (1640–ft), pie-shaped wedge no-entry buffer zone will be established around the haul-out site on YBI to minimize the impact of project-related vessel traffic during the PIDP on marine mammals. This buffer zone will be established in coordination with the USCG. The exclusion zone will either be delineated with USCG-compliant temporary buoys to insure compliance, or all employees and contractors associated with the PIDP will be informed of the no-entry zone. In addition, CALTRANS will establish strict standards on vessel speed for all project-related crafts traveling in the Bay.

The PIDP is expected to take place in late summer 2000. This timing would not coincide with the period of peak abundance at the YBI harbor seal haul-out site (November through February). Harbor seal molting season in the Bay begins in June. If the PIDP occurs during the harbor seal molting season, a greater proportion of harbor seals should be hauled out and, therefore, not subject to the potentially elevated in-water SPLs from pile driving.

Finally, CALTRANS proposes to use this demonstration period to test the effectiveness of potential mitigation techniques. One potential mitigation measure is an underwater sound barrier based on the noise-attenuating properties of air bubbles in water. At least two experimental techniques for creating underwater sound barriers will be tested by CALTRANS. Underwater SPLs will be recorded at various distances from pile driving activities in order to assess which measures, if any, prove practical and effective in reducing sound pressure levels.

Monitoring

Monitoring of the safety zone will be conducted during all active pile driving. Monitoring of the safety zone will be conducted by a minimum of three qualified observers (CALTRANS states that they will employ three observers in daytime and 6 observers during darkness (January 31, 2000, letter to NMFS)). The observers will begin monitoring at least 30 minutes prior to startup of the pile driving. Observers will likely conduct the monitoring from small boats, as observations from a higher vantage point (such as the SF–OBB) may not be practical.

Observations will be made using binoculars during daylight hours. For operations at night, infrared or image intensifying equipment will be used. In addition to monitoring from boats, monitoring of the YBI haul-out will be conducted on land during all active pile driving. Data on all observations will be recorded and will include items such as species, numbers, time of observation, location, behavior, etc.

Both underwater and airborne SPL measurements will be made.

Underwater Sound Monitoring

Waterborne sound from the pile driving will be measured at approximately four locations. These locations will typically be in some combination of: (1) close to the pile driving activity, (2) two mid-point locations, and (3) one distant location. Each measuring system will consist of a hydrophone with charge type conditioning amplifier connected to a sound level readout device and an instrumentation-grade digital audio tape (DAT) recorder. ''Real-time'' amplitude DAT measurements of underwater sound levels will be provided. The hydrophone will be deployed from a skiff to an appropriate depth at each location. A portable geostationary positioning system (GPS) unit will document the location coordinates of the skiff. It is anticipated that the sound level and frequency spectrum of the recorded noise signals will also be analyzed in a laboratory subsequent to the test.

Airborne Sound Monitoring

Airborne sound from the pile driving will be measured at approximately four locations that are coincident with the underwater measurement locations (i.e., typically a combination of: (1) close to the pile driving activity, (2) two mid-point locations, and (3) one distant location). In addition, airborne sound will also be measured at YBI, as close as practicable to the haul-out site. Each measuring system will consist of a Type 1 Sound Level Meter (SLM) connected to an instrumentation-grade DAT recorder. ''Real-time'' amplitude measurements of airborne sound levels will be provided. The SLM will be equipped with a windscreen and tripod mounted on a skiff at approximately 1.2 meters above water level. As previously stated, a portable GPS unit will document the location coordinates of the skiff. It is anticipated that the sound level and frequency spectrum of the recorded noise signals will be analyzed in a laboratory subsequent to the test.

Reporting

CALTRANS will notify NMFS prior to the initiation of the PIDP, and coordination with NMFS will occur on a weekly basis, or more often, as necessary. NMFS will be informed of the initial SPL measurements taken to estimate the 190 dB re 1 μPa_{RMS} contour and the final safety-zone radii established. Monitoring reports will be faxed to NMFS on a daily basis. The daily report will include species and numbers of marine mammals observed, time and location of observation, and behavior. In addition the report will include an estimate of the number of California sea lions and Pacific harbor seals that may have been harassed as a result of the pile driving activities.

CALTRANS will provide NMFS with a final report detailing the monitoring protocol, a summary of the data recorded during monitoring, an estimate of the numbers of marine mammals that may have been harassed due to pile driving, and conclusions drawn from measurements with and without the attenuation measures.

Conclusions

Based on the previous discussion, NMFS has determined that the PIDP may unintentionally cause the harassment of California sea lions and Pacific harbor seals. Although CALTRANS has requested an authorization for Level B harassment, as a result of a behavioral modification to avoid either pile driving noise or human activity, NMFS notes that, on occasion, monitoring the safety zone may not be 100 percent effective. As a result, some harbor seals or California sea lions, while underwater in the vicinity of the PIDP, may incur levels above 190 dB re 1 μPa_{RMS}. At and above an SPL of this level, marine mammals may incur a temporary threshold shift (TTS) in hearing, lasting from a few minutes to a few hours. However, no take by death is anticipated, and harassment takes will be at the lowest level practicable due to incorporation of the mitigation measures mentioned above.

The PIDP is expected to have no more than an insignificant impact to marine mammals or their habitat. Harbor seals on YBI are commonly subjected to high levels of disturbance, primarily from watercraft, especially during the summer, when the numbers of small boats, jet skis, kayaks, etc. in the Bay increase. Abandonment of the haul-out site is not anticipated as sound levels from pile driving, both in water and in air, are expected to attenuate to sufficiently low levels by the time the SPLs reach the YBI haulout site. Although harbor seal pups have been observed at the YBI haul-out site, it is not a recognized pupping site and, therefore, no significant impacts on species recruitment are anticipated. Other haul-out sites for sea lions and harbor seals area are at a sufficient

distance from the project site that they will not be affected.

Since NMFS is assured that the taking will not result in more than the incidental harassment (as defined by the MMPA) of small numbers of Pacific harbor seals and California sea lions, and would result in the least practicable impact on these stocks, NMFS has determined that the requirements of section 101(a)(5)(D) have been met and the authorization can be issued.

Authorization

For the previously stated reasons, NMFS has issued an IHA for a 1-year period, for the harassment of harbor seals and California sea lions incidental to a PIDP at the SF–OBB, San Francisco Bay, California, provided the above mentioned mitigation, monitoring and reporting requirements mentioned earlier are incorporated.

Dated: May 23, 2000.

Art Jeffers,

Deputy Director, Office of Protected Resources, National Marine Fisheries Service.

[FR Doc. 00–13712 Filed 5–31–00; 8:45 am]

BILLING CODE 3510–22–F

DEPARTMENT OF COMMERCE

National Oceanic and Atmospheric Administration

[I.D. 052400F]

Pacific Fishery Management Council; Public Meetings

AGENCY: National Marine Fisheries Service (NMFS), National Oceanic and Atmospheric Administration (NOAA), Commerce.

ACTION: Notice of public meetings.

SUMMARY: The Pacific Fishery Management Council (Council) and its advisory entities will hold public meetings.

DATES: The Council and its advisory entities will meet June 26–30, 2000. The Council meeting will begin on Tuesday, June 27, at 8:30 a.m., reconvening each day through Friday. All meetings are open to the public, except a closed session will be held from 8 a.m. until 8:30 a.m. on Tuesday, June 27 to address litigation and personnel matters. The Council will meet as late as necessary each day to complete its scheduled business.

ADDRESSES: The meetings and hearing will be held at the Doubletree Hotel—Columbia River, 1401 Hayden Island Drive, Portland, OR 97217; telephone: (503) 283–2111.

Council address: Pacific Fishery Management Council, 2130 SW Fifth Avenue, Suite 224, Portland, OR 97201.

FOR FURTHER INFORMATION CONTACT: Dr. Donald O. McIsaac, Executive Director; telephone: (503) 326–6352.

SUPPLEMENTARY INFORMATION: The following items are on the Council agenda, but not necessarily in this order:

A. Call to Order

1. Opening Remarks, Introductions, Roll Call
2. Roll Call
3. Executive Director's Report
4. Status of Federal Regulation Implementation
5. Council Action: Approve Agenda

B. Salmon Management

1. Salmon Management Agenda Overview
2. Sequence of Events and Status of Fisheries
3. Salmon Methodology Reviews
4. Status of Amendment 14 and Implications for 2001 Overfishing Concerns
5. Update on Review of Oregon Coastal Natural Coho Management Criteria

C. Marine Reserves

1. Staff Report on Phase I Considerations of Marine Reserves as a Management Measure

D. Groundfish Management

1. Groundfish Management Agenda Overview
2. Status of Federal Groundfish Activities
3. Strategic Plan
4. Stock Assessment Priorities for 2001
5. Status of Fisheries and Inseason Adjustments
6. Sablefish Three-Tier Fishery—Inseason Adjustments
7. Rockfish Bycatch Rates
8. Plan Amendment to Address Bycatch and Management Measure Issues
9. American Fisheries Act Management Measures
10. Process for Technical Review and Monitoring of Rebuilding Plans
11. Canary Rockfish Rebuilding Plan Development
12. Cowcod Rebuilding Plan Development
13. Default Maximum Sustainable Yield (MSY) Fishing Rate within the Harvest Rate Policy
14. Preliminary Feedback on the 2000 Stock Assessment Review Panel Meetings (Draft Stock Assessments for 2001)
15. Fishing Capacity Reduction Measures
16. Observer Program

E. Highly Migratory Species Management

1. Highly Migratory Species Management Agenda Overview
2. Update on Plan Development

F. Coastal Pelagic Species Management

1. Coastal Pelagic Species (CPS) Management Agenda Overview
2. Exempted Fishing Permits to Harvest Anchovy in Closed Area
3. Preliminary Harvest Levels and Other Specifications for 2001
4. Pacific Sardine Harvest Guideline Suballocation
5. CPS Finfish Limited Entry Permit Issues: Capacity Goal and Squid Permit Transferability
6. Status of CPS Fishery Management Plan (FMP) Amendments for Bycatch and Market Squid MSY, Acceptable Biological Catch, and Tribal Fishing Rights

G. Habitat Issues

1. Report of the Habitat Steering Group (HSG)
2. Process for Designating Habitat Areas of Particular Concern

H. Administrative and Other Matters

1. Report of the Budget Committee
2. Status of Legislation
3. Changes in Council Operations and Protocols
4. Report on the Council Chairmans' Meeting
5. Research and Data Needs/Economic Data Plan
6. Council Staff Workload Priorities and Schedules
7. Appointment to the Groundfish Advisory Subpanel
8. Draft Agenda for September 2000

Schedule of Ancillary Meetings

Monday, June 26, 2000

Council Secretariat—7 a.m.; Deschutes Room
Groundfish Management Team—8 a.m.; Yakima Room
Scientific and Statistical—8 a.m.; Umatilla Room
Habitat Steering Group—9 a.m.; Tualatin Room
Budget Committee—2 p.m.; Umpqua Room
Groundfish Advisory Subpanel—11 a.m.; Willamette Room
Legal Gear/Habitat Impacts—6 p.m.; Tualatin Room

Tuesday, June 27, 2000

Council Secretariat—7 a.m.; Deschutes Room
California State Delegation—7 a.m.; Yakima Room
Oregon State Delegation—7 a.m.; Willamette Room
Washington State Delegation—7 a.m.; Umatilla Room
Groundfish Advisory Subpanel—8 a.m.; Willamette Room
Groundfish Management Team—8 a.m.; Yakima Room
Scientific and Statistical—8 a.m.; Umatilla Room
Enforcement Consultants—5:30 p.m.; Tualatin Room
Ad-Hoc Groundfish Strategic Plan Development Committee Briefing—7 p.m.; Willamette Room

Wednesday, June 28, 2000

Council Secretariat—7 a.m.; Deschutes Room
California State Delegation—7 a.m.; Yakima Room
Oregon State Delegation—7 a.m.; Willamette Room
Washington State Delegation—7 a.m.; Umatilla Room
Scientific and Statistical—8 a.m.; Umatilla Room
Enforcement Consultants—As Needed; TBD
Groundfish Advisory Subpanel—As Needed; Willamette Room
Groundfish Management Team—As Needed; Yakima Room

Thursday, June 29, 2000

Council Secretariat—7 a.m.; Deschutes Room

California State Delegation—7 a.m.; Yakima Room
Oregon State Delegation—7 a.m.; Willamette Room
Washington State Delegation—7 a.m.; Umatilla Room
Enforcement Consultants—As Needed; TBD
Groundfish Advisory Subpanel—As Needed; Willamette Room
Groundfish Management Team—As Needed; Yakima Room
Highly Migratory Species Advisory—10 a.m.; Umatilla Room

Friday, June 30, 2000

Council Secretariat—7 a.m.; Deschutes Room
California State Delegation—7 a.m.; Yakima Room
Oregon State Delegation—7 a.m.; Willamette Room
Washington State Delegation—7 a.m.; Umatilla Room
Enforcement Consultants—As Needed; TBD

Although non-emergency issues not contained in this agenda may come before this Council for discussion, those issues may not be the subject of formal Council action during this meeting. Council action will be restricted to those issues specifically listed in this notice and any issues arising after publication of this notice that require emergency action under section 305(c) of the Magnuson-Stevens Fishery Conservation and Management Act, provided the public has been notified of the Council's intent to take final action to address the emergency.

Special Accommodations

These meetings are physically accessible to people with disabilities. Requests for sign language interpretation or other auxiliary aids should be directed to Mr. John S. Rhoton at (503) 326–6352 at least 5 days prior to the meeting date.

Dated: May 25, 2000.

Richard W. Surdi,

Acting Director, Office of Sustainable Fisheries, National Marine Fisheries Service.

[FR Doc. 00–13713 Filed 5–31–00; 8:45 am]

BILLING CODE 3510–22–P

DEPARTMENT OF DEFENSE

Department of the Army

Privacy Act of 1974; System of Records

AGENCY: Department of the Army, DoD.

ACTION: Notice to Amend a System of Records.

SUMMARY: The Department of the Army is amending two systems of records notices in its existing inventory of record systems subject to the Privacy Act of 1974, (5 U.S.C. 552a), as amended.

DATES: This proposed action will be effective without further notice on July 3, 2000 unless comments are received which result in a contrary determination.

ADDRESSES: Privacy Act System Notice Manager, Records Management Division, U.S. Army Records Management and Declassification Agency, ATTN: TAPC–PDD–RP, Stop 5603, Ft. Belvoir, VA 22060–5603.

FOR FURTHER INFORMATION CONTACT: Ms. Janice Thornton at (703) 806–4390 or DSN 656–4390.

SUPPLEMENTARY INFORMATION: The Department of the Army systems of records notices subject to the Privacy Act of 1974, (5 U.S.C. 552a), as amended, have been published in the **Federal Register** and are available from the address above.

The specific changes to the record systems being amended are set forth below followed by the notices, as amended, published in their entirety. The proposed amendments are not within the purview of subsection (r) of the Privacy Act of 1974, (5 U.S.C. 552a), as amended, which requires the submission of a new or altered system report.

Dated: May 24, 2000.

L.M. Bynum,

Alternate OSD Federal Register Liaison Officer, Department of Defense.

A0215–3 DAPE

SYSTEM NAME:

NAF Personnel Records *(January 20, 2000, 65 FR 3217).*

CHANGE:

SYSTEM IDENTIFIER

Delete entry and replace with 'A0215–3 SAMR'.

* * * * *

A0215–3 SAMR

SYSTEM NAME:

NAF Personnel Records.

SYSTEM LOCATION:

Civilian Personnel Offices and at Army installations; National Personnel Records Center, (Civilian), 111 Winnebago Street, St. Louis, MO 63118–4199. Where duplicates of these records are stored in a manager' s employment file, e.g., an administrative office closer to where the employee actually works, this notice applies.

CATEGORIES OF INDIVIDUALS COVERED BY THE SYSTEM:

All individuals who have applied for employment with, are employed by, or were employed by nonappropriated fund (NAF) activities.

CATEGORIES OF RECORDS IN THE SYSTEM:

Applications for employment, documents relating to testings, ratings, qualifications, prior employment, appointment, suitability, security, retirement, group insurance, medical certificates; performance evaluations; job descriptions; training and career development records; awards and commendations data, tax withholding authorizations; documents relating to injury and death compensation, unemployment compensation, travel and transportation, Business Based Action (BBA), adverse actions, conflict-of-interest and/or conduct, and similar relevant matters.

AUTHORITY FOR MAINTENANCE OF THE SYSTEM:

5 U.S.C. 301, Departmental Regulations; 10 U.S.C. 3013, Secretary of the Army; E.O. 9397 (SSN); and Army Regulation 215–3, Nonappropriated Funds and Related Activities Personnel Policies and Procedures.

PURPOSE(S):

These records are maintained to carry out a personnel management program for Department of the Army non-appropriated fund instrumentalities. Records are used to recruit, appoint, assign, pay, evaluate, recognize, discipline, train and develop, and separate individuals; to administer employee benefits; and to conduct labor-management relations, employee-management relations, and responsibilities inherent in managerial and supervisory functions.

ROUTINE USES OF RECORDS MAINTAINED IN THE SYSTEM, INCLUDING CATEGORIES OF USERS AND THE PURPOSES OF SUCH USES:

In addition to those disclosures generally permitted under 5 U.S.C. 552a(b) of the Privacy Act, these records or information contained therein may specifically be disclosed outside the DoD as a routine use pursuant to 5 U.S.C. 552a(b)(3) as follows:

Information may be disclosed to appropriate Federal agencies, such as the Department of Labor and the Equal Employment Opportunity Commission, to resolve and/or adjudicate matters falling within their jurisdiction.

Records may also be disclosed to labor organizations in response to requests for names of employees and identifying information.

The 'Blanket Routine Uses' set forth at the beginning of the Army's compilation

of systems of records notices also apply to this system.

POLICIES AND PRACTICES FOR STORING, RETRIEVING, ACCESSING, RETAINING, AND DISPOSING OF RECORDS IN THE SYSTEM:

STORAGE:

Paper records in file folders, kardex files, and electronic storage media.

RETRIEVABILITY:

Paper records are retrieved by surname and electronic retrieval is both surname and Social security Number.

SAFEGUARDS:

Records are maintained in areas restricted to authorized persons having official need therefor; all information is regarded as if it were marked 'For Official Use Only'.

RETENTION AND DISPOSAL:

Records are permanent; after employee separates, records are retired to the National Personnel Records Center (Civilian), 111 Winnebago Street, St. Louis, MO 63118–4199 within 30 days. Copies of these records maintained in an administrative office or by the supervisor are retained until the employee transfers or separates; destroyed 30 days later.

SYSTEM MANAGER(S) AND ADDRESS:

Office of the Assistant Secretary of the Army, Manpower and Reserve Affairs, 200 Stovall Street, Alexandria, VA 22332–0300.

NOTIFICATION PROCEDURE:

Individuals seeking to determine whether information about themselves is contained in this system should address written inquiries to the local Civilian Personnel Officer; former nonappropriated fund employees should write to the National Personnel Records Center (Civilian) 111 Winnebago Street, St. Louis, MO 63118–4199.

Individual should provide his/her full name, current address and telephone number, a specific description of the information/records sought, and any identifying numbers such as Social Security Number.

RECORD ACCESS PROCEDURES:

Individuals seeking access to information about themselves contained in this system should address written inquiries to the local Civilian Personnel Officer; former nonappropriated fund employees should write to the National Personnel Records Center (Civilian) 111 Winnebago Street, St. Louis, MO 63118–4199.

Individual should provide his/her full name, current address and telephone number, a specific description of the information/records sought, and any identifying numbers such as Social Security Number.

CONTESTING RECORD PROCEDURES:

The Army's rules for accessing records, and for contesting contents and appealing initial agency determinations are contained in Army Regulation 340–21; 32 CFR part 505; or may be obtained from the system manager.

RECORD SOURCE CATEGORIES:

From the applicant; statements or correspondence from persons having knowledge of the individual; official records; actions affecting individual's employment and/or pay.

EXEMPTIONS CLAIMED FOR THE SYSTEM:

None.

A0190–13 CFSC

SYSTEM NAME:

Security Badge/Identification Card Files *(February 22, 1993, 58 FR 10002)*.

CHANGES:

SYSTEM IDENTIFIER:

Delete entry and replace with 'A0600–8–14 DAPE'.

SYSTEM LOCATION:

Delete entry and replace with 'Headquarters, Department of the Army, staff and field operating agencies, states' adjutant general offices, and any Army installations/activities/offices world-wide that issue security badges and identification cards authorized by Army Regulations. Official mailing addresses are published as an appendix to the Army's compilation of systems of records notices.'

CATEGORIES OF INDIVIDUALS COVERED BY THE SYSTEM:

Add to entry 'Individuals issued a security badge/identification card by the Department of the Army. These include, but are not limited to . . .'

CATEGORIES OF RECORDS IN THE SYSTEM:

Add Army Regulation 600–8–14, Identification Cards for Members of the Uniformed Services, Their Family Members, and Other Eligible Personnel.

* * * * *

A0600–8–14 DAPE

SYSTEM NAME:

Security Badge/Identification Card Files.

SYSTEM LOCATION:

Headquarters, Department of the Army, staff and field operating agencies, states' adjutant general offices, and any Army installations/activities/offices world-wide that issue security badges and identification cards authorized by Army Regulations. Official mailing addresses are published as an appendix to the Army's compilation of systems of records notices.

CATEGORIES OF INDIVIDUALS COVERED BY THE SYSTEM:

Individuals issued a security badge/identification card by the Department of the Army. These include, but are not limited to active duty, reserve, and retired military personnel and authorized dependents; Department of Defense civilians and their dependents; Embassy personnel and their dependents, Medal of Honor recipients; visitors authorized for official purposes, e.g., vendors, delivery men, utility and special equipment servicemen; accident investigators; contractor personnel and their authorized dependents; Red Cross personnel; and persons authorized by the Geneva Convention to accompany the Armed Forces.

CATEGORIES OF RECORDS IN THE SYSTEM:

Individual's application on appropriate Department of Army and Department of Defense forms specified by Army Regulation 600–8–14 (the original of which may be filed in the individual's personnel file) for identification and/or building security pass/badge issuance; individual's photograph, fingerprint record, special credentials, and allied papers; registers/logs reflecting sequential numbering of badges/cards.

AUTHORITY FOR MAINTENANCE OF THE SYSTEM:

5 U.S.C. 301, Departmental Regulations; 10 U.S.C. 3013, Secretary of the Army; Army Regulation 190–13, The Army Physical Security Program; Army Regulation 600–8–14, Identification Cards for Members of the Uniformed Services, Their Family Members, and Other Eligible Personnel; and E.O. 9397 (SSN).

PURPOSE(S):

To provide a record of security badges and identification cards issued: to restrict entry into installations/activities; and to ensure positive identification of personnel authorized access to restricted areas. Registers/logs maintain accountability for issuance and disposition of badges and identification cards.

ROUTINE USES OF RECORDS MAINTAINED IN THE SYSTEM, INCLUDING CATEGORIES OF USERS AND THE PURPOSES OF SUCH USES:

In addition to those disclosures generally permitted under 5 U.S.C. 552a(b) of the Privacy Act, these records

or information contained therein may specifically be disclosed outside the DoD as a routine use pursuant to 5 U.S.C. 552a(b)(3) as follows:

The 'Blanket Routine Use' set forth at the beginning of the Army's compilation of systems of records notices also apply to this system.

POLICIES AND PRACTICES FOR STORING, RETRIEVING, ACCESSING, RETAINING, AND DISPOSING OF RECORDS:

STORAGE:

Paper records in file folders; magnetic tapes; discs; cassettes; computer printouts; and microfiche.

RETRIEVABILITY:

By individual's name, Social Security Number, card/badge number.

SAFEGUARDS:

Data are maintained in secure buildings and are accessed only by authorized personnel who are trained and cleared for access. Information in computer facilities is further protected by alarms and established procedures for the control of computer access.

RETENTION AND DISPOSAL:

Applications for military identification cards are maintained by the issuing office for 1 year; those for civilian cards are retained 4 years, after which they are destroyed. Registers/logs are destroyed 3 years after last badge has been accounted for.

Limited area credentials are replaced after 3 years or when a total of 5 of the total have been lost or unaccounted for, whichever occurs earlier, exclusion area credentials are replaced at least once every 3 years; controlled area credentials are replaced at the discretion of the major commander.

SYSTEM MANAGER(S) AND ADDRESS:

Commander, U.S. Total Army Personnel Command, 200 Stovall Street, Alexandria, VA 22332–0400.

NOTIFICATION PROCEDURE:

Individuals seeking to determine whether information about themselves is contained in this system should address written inquiries to the issuing office where the individual obtained the identification card or to the system manager.

Individual should provide the full name, number of the identification card, current address, and signature.

RECORD ACCESS PROCEDURES:

Individuals seeking access to records about themselves contained in this record system should address written inquiries to the issuing officer at the appropriate installation.

Individual should provide the full name, number of the identification card, current address, and signature.

CONTESTING RECORD PROCEDURES:

The Army rules for accessing records, and for contesting contents and appealing initial agency determinations are contained in Army Regulation 340–21; 32 CFR part 505; or may be obtained from the system manager.

RECORD SOURCE CATEGORIES:

From the individual; Army records and reports.

EXEMPTIONS CLAIMED FOR THE SYSTEM:

None.

[FR Doc. 00–13524 Filed 5–31–00; 8:45 am]

BILLING CODE 5000–10–F

DEPARTMENT OF EDUCATION

Submission for OMB Review; Comment Request

AGENCY: Department of Education.

SUMMARY: The Leader, Information Management Group, Office of the Chief Information Officer invites comments on the submission for OMB review as required by the Paperwork Reduction Act of 1995.

DATES: Interested persons are invited to submit comments on or before July 3, 2000.

ADDRESSES: Written comments should be addressed to the Office of Information and Regulatory Affairs, Attention: Danny Werfel, Desk Officer, Department of Education, Office of Management and Budget, 725 17th Street, NW., Room 10235, New Executive Office Building, Washington, DC 20503 or should be electronically mailed to the internet address DWERFEL@OMB.EOP.GOV.

SUPPLEMENTARY INFORMATION: Section 3506 of the Paperwork Reduction Act of 1995 (44 U.S.C. chapter 35) requires that the Office of Management and Budget (OMB) provide interested Federal agencies and the public an early opportunity to comment on information collection requests. OMB may amend or waive the requirement for public consultation to the extent that public participation in the approval process would defeat the purpose of the information collection, violate State or Federal law, or substantially interfere with any agency's ability to perform its statutory obligations. The Leader, Information Management Group, Office of the Chief Information Officer, publishes that notice containing proposed information collection requests prior to submission of these requests to OMB. Each proposed information collection, grouped by office, contains the following: (1) Type of review requested, *e.g.* new, revision, extension, existing or reinstatement; (2) Title; (3) Summary of the collection; (4) Description of the need for, and proposed use of, the information; (5) Respondents and frequency of collection; and (6) Reporting and/or Recordkeeping burden. OMB invites public comment.

Dated: May 25, 2000.

William Burrow,

Leader, Information Management Group, Office of the Chief Information Officer.

Office of Postsecondary Education

Type of Review: Reinstatement.

Title: Paul Douglas Teacher Scholarship Program Performance Report.

Frequency: Annually.

Affected Public: State, Local, or Tribal Gov't, SEAs or LEAs; Federal Government.

Reporting and Recordkeeping Hour Burden: Responses; 57 Burden Hours: 684.

Abstract: This program has not received funding since 1994. It was originally designed to assist State agencies to provide scholarships to talented and meritorious students who were seeking careers as teaching professionals.

Requests for copies of the proposed information collection request may be accessed from *http://edicsweb.ed.gov,* or should be addressed to Vivian Reese, Department of Education, 400 Maryland Avenue, SW, Room 5624, Regional Office Building 3, Washington, D.C. 20202–4651. Requests may also be electronically mailed to the internet address OCIO__IMG__Issues@ed.gov or faxed to 202–708–9346. Please specify the complete title of the information collection when making your request. Comments regarding burden and/or the collection activity requirements should be directed to Joseph Schubart at (202) 708–9266 or via his internet address Joe__Schubart@ed.gov. Individuals who use a telecommunications device for the deaf (TDD) may call the Federal Information Relay Service (FIRS) at 1–800–877–8339.

[FR Doc. 00–13645 Filed 5–31–00; 8:45 am]

BILLING CODE 4000–01–U

DEPARTMENT OF EDUCATION

Submission for OMB Review; Comment Request

AGENCY: Department of Education.

SUMMARY: The Leader, Information Management Group, Office of the Chief Information Officer invites comments on the submission for OMB review as required by the Paperwork Reduction Act of 1995.

DATES: Interested persons are invited to submit comments on or before July 3, 2000.

ADDRESSES: Written comments should be addressed to the Office of Information and Regulatory Affairs, Attention: Danny Werfel, Desk Officer, Department of Education, Office of Management and Budget, 725 17th Street, NW., Room 10235, New Executive Office Building, Washington, DC 20503 or should be electronically mailed to the internet address DWERFEL@OMB.EOP.GOV.

SUPPLEMENTARY INFORMATION: Section 3506 of the Paperwork Reduction Act of 1995 (44 U.S.C. Chapter 35) requires that the Office of Management and Budget (OMB) provide interested Federal agencies and the public an early opportunity to comment on information collection requests. OMB may amend or waive the requirement for public consultation to the extent that public participation in the approval process would defeat the purpose of the information collection, violate State or Federal law, or substantially interfere with any agency's ability to perform its statutory obligations. The Leader, Information Management Group, Office of the Chief Information Officer, publishes that notice containing proposed information collection requests prior to submission of these requests to OMB. Each proposed information collection, grouped by office, contains the following: (1) Type of review requested, *e.g.* new, revision, extension, existing or reinstatement; (2) Title; (3) Summary of the collection; (4) Description of the need for, and proposed use of, the information; (5) Respondents and frequency of collection; and (6) Reporting and/or Recordkeeping burden. OMB invites public comment.

Dated: May 25, 2000.

William Burrow,

Leader, Information Management Group, Office of the Chief Information Officer.

Office of Postsecondary Education

Type of Review: Reinstatement.

Title: Performance Report for the Ronald E. McNair Postbaccalaureate Achievement Program.

Frequency: Annually.

Affected Public: Not-for-profit institutions.

Reporting and Recordkeeping Hour Burden:

Responses: 156.

Burden Hours: 702.

Abstract: The Ronald E. McNair Postbaccalaureate Achievement Program grantees are required to submit the report annually. The reports are used to monitor the performance of grantees prior to awarding continuation grants and to assess a grantee's prior experience at the end of each budget period. The Department will also aggregate the data to provide descriptive information and analyze program impact.

Requests for copies of the proposed information collection request may be accessed from *http://edicsweb.ed.gov,* or should be addressed to Vivian Reese, Department of Education, 400 Maryland Avenue, SW, Room 5624, Regional Office Building 3, Washington, D.C. 20202–4651. Requests may also be electronically mailed to the internet address OCIO__IMG__Issues@ed.gov or faxed to 202–708–9346.

Please specify the complete title of the information collection when making your request. Comments regarding burden and/or the collection activity requirements should be directed to Joseph Schubart at (202) 708–9266 or via his internet address Joe__Schubart@ed.gov. Individuals who use a telecommunications device for the deaf (TDD) may call the Federal Information Relay Service (FIRS) at 1–800–877–8339.

[FR Doc. 00–13646 Filed 5–31–00; 8:45 am]

BILLING CODE 4000–01–U

DEPARTMENT OF ENERGY

[Docket No. EA–223]

Application To Export Electric Energy; CMS Marketing, Services and Trading Company

AGENCY: Office of Fossil Energy, DOE.

ACTION: Notice of application.

SUMMARY: CMS Marketing, Services and Trading Company (CMS MS&T) has applied for authority to transmit electric energy from the United States to Canada pursuant to section 202(e) of the Federal Power Act.

DATES: Comments, protests or requests to intervene must be submitted on or before July 3, 2000.

ADDRESSES: Comments, protests or requests to intervene should be addressed as follows: Office of Coal & Power Im/Ex (FE–27), Office of Fossil Energy, U.S. Department of Energy, 1000 Independence Avenue, SW, Washington, DC 20585–0350 (FAX 202–287–5736).

FOR FURTHER INFORMATION CONTACT: Steven Mintz (Program Office) 202–586–9506 or Michael Skinker (Program Attorney) 202–586–2793.

SUPPLEMENTARY INFORMATION: Exports of electricity from the United States to a foreign country are regulated and require authorization under section 202(e) of the Federal Power Act (FPA) (16U.S.C. § 824a(e)).

On May 12, 2000, the Office of Fossil Energy (FE) of the Department of Energy (DOE) received an application from CMS MS&T to transmit electric energy from the United States to Canada. CMS MS&T, a Michigan corporation, is a wholly owned subsidiary of CMS Enterprises Company which is in turn a wholly owned subsidiary of CMS Energy Corporation. CMS MS&T is a power marketer that does not own or control any electric generation or transmission facilities nor does it have any franchised electric service territory in the United States. CMS MS&T will purchase the electric energy to be exported at wholesale from electric utilities and Federal Power Marketing Administrations in the United States.

CMS MS&T proposes to arrange for the delivery of electric energy to Canada over the international transmission facilities owned by Basin Electric Power Cooperative, Bonneville Power Administration, Citizens Utilities, Detroit Edison Company, Eastern Maine Electric Cooperative, Joint Owners of the Highgate Project, Long Sault, Inc., Maine Electric Power Company, Maine Public Service Company, Minnesota Power Inc., Minnkota Power Cooperative, New York Power Authority, Niagara Mohawk Power Corporation, Northern States Power, and Vermont Electric Transmission Company. The construction of each of the international transmission facilities to be utilized by CMS MS&T, as more fully described in the application, has previously been authorized by a Presidential permit issued pursuant to Executive Order 10485, as amended.

Procedural Matters

Any person desiring to become a party to this proceeding or to be heard by filing comments or protests to this application should file a petition to intervene, comment or protest at the address provided above in accordance with §§ 385.211 or 385.214 of the FERC's Rules of Practice and Procedures (18 CFR 385.211, 385.214). Fifteen copies of each petition and protest should be filed with the DOE on or before the date listed above.

Comments on the CMS MS&T application to export electric energy to Canada should be clearly marked with

Docket EA–223. Additional copies are to be filed directly with Francis X. Berkemeier, Attorney, 212 W. Michigan Avenue, Jackson, MI 49201.

A final decision will be made on this application after the environmental impacts have been evaluated pursuant to the National Environmental Policy Act of 1969, and a determination is made by the DOE that the proposed action will not adversely impact on the reliability of the U.S. electric power supply system.

Copies of this application will be made available, upon request, for public inspection and copying at the address provided above or by accessing the Fossil Energy Home Page at http://www.fe.doe.gov. Upon reaching the Fossil Energy Home page, select ''Regulatory'' Programs,'' then ''Electricity Regulation,'' and then ''Pending Proceedings'' from the options menus.

Issued in Washington, D.C., on May 19, 2000.

Anthony J. Como,

Deputy Director, Electric Power Regulation, Office of Coal & Power Systems, Office of Fossil Energy.

[FR Doc. 00–13668 Filed 5–31–00; 8:45 am]

BILLING CODE 6450–01–P

DEPARTMENT OF ENERGY

Federal Energy Regulatory Commission

[Docket No. RP00–292–000]

ANR Pipeline Company; Notice of Proposed Change in FERC Gas Tariff

May 25, 2000.

Take notice that on May 19, 2000, ANR Pipeline Company (ANR) tendered for filing as part of its FERC Gas Tariff, Second Revised Volume No. 1, the following revised tariff sheet to be effective July 1, 2000.

Eighth Revised Sheet No. 70

ANR states that this filing, made in accordance with the provisions of Section 154.204 of the Commission's regulations, is to modify certain of ANR's pro forma service agreements so that discount agreements may provide for adjustments to rate components upward or downward to achieve an agreed upon overall rate as long as all rate components remain within the applicable minimum and maximum rates specified in the tariff.

ANR states that copies of the filing have been mailed to all affected customers and state regulatory commissions.

Any person desiring to be heard or to protest said filing should file a motion to intervene or a protest with the Federal Energy Regulatory Commission, 888 First Street, NE., Washington, DC 20426, in accordance with Sections 385.214 or 385.211 of the Commission's Rules and Regulations. All such motions or protests must be filed in accordance with Section 154.210 of the Commission's Regulations. Protests will be considered by the Commission in determining the appropriate action to be taken, but will not serve to make protestants parties to the proceedings. Any person wishing to become a party must file a motion to intervene. Copies of this filing are on file with the Commission and are available for public inspection in the Public Reference Room. This filing may be viewed on the web at http://www.ferc.fed.us/online/rims.htm (call 202–208–2222 for assistance).

Linwood A. Watson, Jr.,

Acting Secretary.

[FR Doc. 00–13628 Filed 5–31–00; 8:45 am]

BILLING CODE 6717–01–M

DEPARTMENT OF ENERGY

Federal Energy Regulatory Commission

[Docket No. ER99–565–000]

Arizona Public Service Company; Notice of Filing

May 25, 2000.

Take notice that on December 9, 1998, Arizona Public Service Company (APS), tendered for filing a request for withdrawal of its revised tariff sheets filed with the Commission in the above-referenced docket.

Any person desiring to be heard or to protest such filing should file a motion to intervene or protest with the Federal Energy Regulatory Commission, 888 First Street, NE., Washington, DC 20426, in accordance with Rules 211 and 214 of the Commission's Rules of Practice and Procedure (18 CFR 385.211 and 385.214). All such motions and protests should be filed on or before June 5, 2000. Protests will be considered by the Commission to determine the appropriate action to be taken but will not serve to make protestants parties to the proceedings. Any person wishing to become a party must file a motion to intervene. Copies of this filing are on file with the Commission and are available for public inspection. This filing may also be viewed on the Internet at http://www.ferc.fed.us/online/rims.htm (call 202–208–2222 for assistance).

Linwood A. Watson, Jr.,

Acting Secretary.

[FR Doc. 00–13634 Filed 5–31–00; 8:45 am]

BILLING CODE 6717–01–M

DEPARTMENT OF ENERGY

Federal Energy Regulatory Commission

[Docket Nos. RP97–369–015 and RP98–54–031]

Colorado Interstate Gas Company; Notice of Refund Report

May 25, 2000.

Take notice that on May 18, 2000, Colorado Interstate Gas Company (CIG) tendered for filing its third annual refund report in Docket Nos. RP97–369 and RP98–54.

CIG states that this filing and refunds were made to comply with the Commission's order of September 10, 1997. CIG states that refunds were paid by CIG on May 1, 1998 and June 10, 1998.

CIG states that the May 18, 2000, refund report summarizes the refunds made as of that date by CIG for Kansas ad valorem tax overpayments, pursuant to the Commission's September 10, 1997, Order. CIG asserts that no lump sum cash refunds were made by CIG to its former jurisdictional sales customers since its second annual refund report filed in 1999. Instances where payment has not been made within thirty days of receipt from the producers, appropriate interest will be computed as provided for in the order.

CIG states that copies of the filing have been served on CIG's former jurisdictional sales customers, interested states' commissions and all parties to the proceedings.

Any person desiring to protest said filing should file a protest with the Federal Energy Regulatory Commission, 888 First Street, NE, Washington, DC 20426, in accordance with Section 385.211 of the Commission's Rules and Regulations. All such protests must be filed on or before June 1, 2000. Protests will be considered by the Commission in determining the appropriate action to be taken, but will not serve to make protestants parties to the proceedings. Copies of this filing are on file with the Commission and are available for public inspection in the Public Reference Room. This filing may be viewed on the web at http://www.ferc. fed.us/online/

rims.htm (call 202–208–2222 for assistance).

Linwood A. Watson, Jr.,

Acting Secretary.

[FR Doc. 00–13624 Filed 5–31–00; 8:45 am]

BILLING CODE 6717–01–M

DEPARTMENT OF ENERGY

Federal Energy Regulatory Commission

[Docket No. RP96–383–004]

Dominion Transmission, Inc. (Formerly CNG Transmission Corporation); Notice of Negotiated Rate Filing

May 25, 2000.

Take notice that on May 19, 2000, Dominion Transmission, Inc. (Dominion) (formerly CNG Transmission Corporation) tendered for filing the following contract for disclosure of a recently negotiated rate transaction:

Letter Agreement between Dominion Transmission, Inc. and Oswego Harbor Power, L.L.C. Dated May 1, 2000

FT Service Agreement No. 200215 between Dominion Transmission, Inc. and Oswego Harbor Power, L.L.C. Dated May 1, 2000

Amendment to MCS Service Agreement No. MCS113 between Dominion Transmission, Inc. and Oswego Harbor Power, L.L.C. Dated May 1, 2000

Dominion requests an effective date of May 1, 2000 for this negotiated rate agreement.

Dominion states that copies of the filing have been served on all parties on the official service list created by the Secretary in this proceeding.

Any person desiring to be heard or to protest said filing should file a motion to intervene or a protest with the Federal Energy Regulatory Commission, 888 First Street, N.E., Washington, D.C. 20426, in accordance with Sections 385.214 or 385.211 of the Commission's Rules and Regulations. All such motions or protests must be filed in accordance with Section 154.210 of the Commission's Regulations. Protests will be considered by the Commission in determining the appropriate action to be taken, but will not serve to make protestants parties to the proceedings. Any person wishing to become a party must file a motion to intervene. Copies of this filing are on file with the Commission and are available for public inspection in the Public Reference Room. This filing may be viewed on the web at http://www.ferc.fed.us/online/rims.htm (call 202–208–2222 for assistance).

Linwood A. Watson, Jr.,

Acting Secretary.

[FR Doc. 00–13633 Filed 5–31–00; 8:45 am]

BILLING CODE 6717–01–M

DEPARTMENT OF ENERGY

Federal Energy Regulatory Commission

[Docket No. ER00–1816–000 and ER00–1816–001]

DTE River Rouge No. 1, LLC; Notice of Issuance of Order

May 25, 2000.

On March 6, 2000, DTE River Rouge No. 1 LLC (DTE River Rouge) filed a petition requesting that the Commission authorize DTE River Rouge to engage in the sale of electric energy capacity at market-based rates and the reassign transmission capacity. In its filing, DTE River Rouge also requested certain waivers and authorizations. In particular, DTE River Rouge requested that the Commission grant blanket approval under 18 CFR Part 34 of all future issuances of securities and assumptions of liabilities by DTE River Rouge. On May 17, 2000, the Commission issued an Order Accepting Filing And Rejecting Complaint (Order), in the above-docketed proceeding.

The Commission's May 17, 2000 Order granted the request for blanket approval under Part 34, subject to the conditions found in Ordering Paragraphs (G), (H), and (J):

(G) Within 30 days of the date of this order, any person desiring to be heard or to protest the Commission's blanket approval of issuances of securities or assumptions of liabilities by DTE River Rouge should file a motion in intervene or protest with the Federal Energy Regulatory Commission, 888 First Street, N.E., Washington, D.C. 20426, in accordance with Rules 211 and 214 of the Commission's Rules of Practrice and Procedure, 18 CFR 385.211 and 385.214.

(H) Absent a request to be heard within the period set forth in Ordering Paragraph (G) above, DTE River Rouge is hereby authorized to issue securities and assume obligations and liabilities as guarantor, indorser, surety or otherwise in respect of any security of another person; provided that such issue or assumption is for some lawful object within the corporate purposes of DTE River Rouge, compatible with the public interest, and reasonably necessary or appropriate for such purposes.

(J) The Commission reserves the right to modify this order to require a further showing that neither public nor private interests will be adversely affected by continued Commission approval of DTE River Rouge's issuances of securities or assumptions of liabilities. * * *

Notice is hereby given that the deadline for filing motions to intervene or protests, as set forth above, is June 16, 2000.

Copies of the full text of the Order are available from the Commission's Public Reference Branch, 888 first Street, N.E., Washington, D.C. 20426. The Order may also be viewed on the Internet at http://www.ferc.fed.us/online/rims.htm (call 202–208–2222 for assistance).

Linwood A. Watson, Jr.,

Acting Secretary.

[FR Doc. 00–13637 Filed 5–31–00; 8:45 am]

BILLING CODE 6717–01–M

DEPARTMENT OF ENERGY

Federal Energy Regulatory Commission

[Docket No. RP00–293–000]

El Paso Natural Gas Company; Notice of Extension of Time

May 25, 2000.

Take notice that on May 19, 2000, ursuant to Rules 212 and 2008 of the Commission's Rules of Practice and Procedure, 18 CFR 385.212 and 385.2088, El Paso Natural Gas Company (El Paso) tendered for filing a requests for an extension of time in which to comply with that portion of the Commission's directive in Order No. 637 requiring the filing of *pro forma* tariff sheets to implement segmentation of pipeline capacity.

El Paso seeks an extension of time with regard to the issue of capacity segmentation because of its inability to determine whether, and to what extent, capacity segmentation will be possible on its system.

El Paso requests that it be granted an extension of time in which to make its Order No. 637 compliance filing on the issue of capacity segmentation. El Paso proposes to file its *pro forma* segmentation tariff sheets no later than 45 days after the earlier of (i) the filing of an uncontested settlement on the capacity allocation issue, or (ii) the issuance of an order by the Commission in the complaint proceeding establishing the appropriate methodology for allocating El Paso's receipt and delivery point capacity. El Paso asserts that if neither of the foregoing events occurs prior to the

endof calendar year 2000 and a negotiated settlement does not appear to be imminent, El Paso will file, no later than January 15, 2001, *pro forma* tariff sheets that assume the continuation of *pro rata* allocation of El Paso's capacity.

El Paso requests that the Commission act expeditiously on its motion for extension of time. El Paso states that it is currently in the process of preparing its June 15 compliance filing, and it must proceed to formulate a segmentation proposal to include in that filing if this motion is not granted.

Any person desiring to be heard or to protest said filing should file a motion to intervene or a protest with the Federal Energy Regulatory Commission, 888 First Street NE., Washington, DC 20426, in accordance with Sections 385.214 or 385.211 of the Commission's Rules and Regulations. All such motions or protests must be filed on or before June 1, 2000. Protests will be considered by the Commission in determining the appropriate action to be taken, but will not serve to make protestants parties to the proceedings. Any person wishing to become a party must file a motion to intervene. Copies of this filing are on file with the Commission and are available for public inspection in the Public Reference Room. This filing may be viewed on the web at http://www.ferc.fed.us/online/rims.htm (call 202–208–2222 for assistance).

Linwood A. Watson, Jr.,

Acting Secretary.

[FR Doc. 00–13629 Filed 5–31??–00; 8:45 am]

BILLING CODE 6717–01–M

DEPARTMENT OF ENERGY

Federal Energy Regulatory Commission

[Docket Nos. ER00–2074–000 and ER00–2093–000 (Not consolidated)

Elkem Metals Company, Elkem Metals Company-Alloy, Inc.; Notice of Issuance of Order

May 25, 2000.

Elkem Metals Company and Elkem Metals Company-Alloy, Inc. (hereafter, ''the Applicants'') filed with the Commission rate schedules in the above-captioned proceedings, respectively, under which the Applicants will engage in wholesale electric power and energy transactions at market-based rates, and for certain waivers and authorizations. In particular, certain of the Applicants may also have requested in their respective applications that the Commission grant blanket approval under 18 CFR Part 34 of all future issuances of securities and assumptions of liabilities by the Applicants. On May 17, 2000, the Commission issued an order that accepted the rate schedules for sales of capacity and energy at market-based rates (Order), in the above-docketed proceedings.

The Commission's May 17, 2000 Order granted, for those Applicants that sought such approval, their request for blanket approval under Part 34, subject to the conditions found in Appendix B in Ordering Paragraphs (2), (3), and (5):

(2) Within 30 days of the date of this order, any person desiring to be heard or to protest the Commission's blanket approval of issuances of securities or assumptions of liabilities by the Applicants should file a motion to intervene or protest with the Federal Energy Regulatory Commission, 888 First Street, NE, Washington, DC 20426, in accordance with Rules 211 and 214 of the Commission's Rules of Practice and Procedure, 18 CFR 385.211 and 385.214.

(3) Absent a request to be heard within the period set forth in Ordering Paragraph (2) above, if the Applicants have requested such authorization, the Applicants are hereby authorized to issue securities and assume obligations and liabilities as guarantor, indorser, surety or otherwise in respect of any security of another person; provided that such issue or assumption is for some lawful object within the corporate purposes of the Applicants, compatible with the public interest, and reasonably necessary or appropriate for such purposes.

(5) The Commission reserves the right to modify this order to require a further showing that neither public nor private interests will be adversely affected by continued Commission approval of the Applicants' issuances of securities or assumptions of liabilities* * *.

Notice is hereby given that the deadline for filing motions to intervene or protests, as set forth above, is June 16, 2000.

Copies of the full text of the Order are available from the Commission's Public Reference Branch, 888 First Street, NE, Washington, DC 20426. This issuance may also be viewed on the Internet at *http://www.ferc.fed.us/online/rims.htm* (call 202–208–2222) for assistance.

Linwood A. Watson, Jr.,

Acting Secretary.

[FR Doc. 00–13635 Filed 5–31–00; 8:45 am]

BILLING CODE 6717–01–M

DEPARTMENT OF ENERGY

Federal Energy Regulatory Commission

[Docket No. ER00–2248–000]

Energy Trading Company, Inc.; Notice of Issuance of Order

May 25, 2000.

Energy Trading Company, Inc. (Energy Trading) submitted for filing a rate schedule under which Energy Trading will engage in wholesale electric power and energy transactions as a marketer. Energy Trading also requested waiver of various Commission regulations. In particular, Energy Trading requested that the Commission grant blanket approval under 18 CFR part 34 of all future issuances of securities and assumptions of liability by Energy Trading.

On May 18, 2000, pursuant to delegated authority, the Director, Division of Corporate Applications, Office of Markets, Tariffs and Rates, granted requests for blanket approval under part 34, subject to the following:

Within thirty days of the date of the order, any person desiring to be heard or to protest the blanket approval of issuances of securities or assumptions of liability by Energy Trading should file a motion to intervene or protest with the Federal Energy Regulatory Commission, 888 First Street, NE., Washington, DC 20426, in accordance with Rules 211 and 214 of the Commission's Rules of Practice and Procedure (18 CFR 385.211 and 385.214).

Absent a request for hearing within this period, Energy Trading is authorized to issue securities and assume obligations or liabilities as a guarantor, indorser, surety, or otherwise in respect of any security of another person; provided that such issuance or assumption is for some lawful object within the corporate purposes of the applicant, and compatible with the public interest, and is reasonably necessary or appropriate for such purposes.

The Commission reserves the right to require a further showing that neither public nor private interests will be adversely affected by continued approval of Energy Trading's issuances of securities or assumptions of liability.

Notice is hereby given that the deadline for filing motions to intervene or protests, as set forth above, is June 19, 2000.

Copies of the full text of the Order are available from the Commission's Public Reference Branch, 888 First Street, NE., Washington DC 20426. The Order may also be viewed on the Internet at

http://www.ferc.fed.us/online/rims.htm (call 202–208–2222 for assistance).

Linwood A. Watson, Jr.,

Acting Secretary.

[FR Doc. 00–13638 Filed 5–31–00; 8:45 am]

BILLING CODE 6717–01–M

DEPARTMENT OF ENERGY

Federal Energy Regulatory Commission

[Docket No. RP00–252–001]

Florida Gas Transmission Company; Notice of Proposed Compliance Filing

May 25, 2000.

Take notice that on May 22, 2000, Florida Gas Transmission Company (FGT) tendered for filing to become part of its FERC Gas Tariff, Third Revised Volume No. 1, the following tariff sheets, effective June 1, 2000:

Fortieth Revised Sheet No. 8A
Thirty-Second Revised Sheet No. 8A.01
Thirty-Second Revised Sheet No. 8A.02
Thirty-Sixth Revised Sheet No. 8B
Twenty-Ninth Revised Sheet No. 8B.01

FGT states that on February 29, 2000, in Docket No. RP00–194–000, FGT filed to establish a Base Fuel Reimbursement Charge Percentage (Base FRCP) of 2.99% for the six-month Summer Period beginning April 1, 2000. The Base FRCP of 2.99% was accepted by Commission letter order issued March 23, 2000. Subsequently, on April 19, 2000, FGT filed a flex adjustment of 0.01% to be effective May 1, 2000, which resulted in an Effective FRCP of 3.00% when combined with the Base FRCP of 2.99%. In an order dated May, 2000, the Commission accepted the adjustment effective May 18, 2000, but directed FGT to file tariff sheets within seven days to revise the Effective FRCP to 2.99% effective June 1, 2000. FGT is making the instant filing in compliance with the Commission's May 18, order.

Any person desiring to protest this filing should file a protest with the Federal Energy Regulatory Commission, 888 First Street, N.E., Washington, D.C. 20426, in accordance with Section 385.211 of the Commission's Rules and Regulations. All such protests must be filed as provided in Section 154.210 of the Commission's Regulations. Protests will be considered by the Commission in determining the appropriate action to be taken, but will not serve to make protestants parties to the proceedings. Copies of this filing are on file with the Commission and are available for public inspection in the Public Reference Room. This filing may be viewed on the web at http://www.ferc.fed.us/online/rims.htm (call 202–208–2222 for assistance).

Linwood A. Watson, Jr.,

Acting Secretary.

[FR Doc. 00–13626 Filed 5–31–00; 8:45 am]

BILLING CODE 6717–01–M

DEPARTMENT OF ENERGY

Federal Energy Regulatory Commission

[Docket No. RP96–290–005

Michigan Gas Storage Company; Notice of Refund Report

May 25, 2000.

Take notice that on May 22, 2000, Michigan Gas Storage Company (MGSCo) tendered for filing its Refund Report made to comply with the Commission's November 1, 1999 order on Rehearing and February 23, 2000 letter order accepting tariff sheets in this docket.

MGSCo states that the report shows that on April 21, 2000 it refunded $10,303,132.90, including interest, to affected customers for the period January 1997 through February 2000.

MGSCo states that copies of the filing have been served on all customers and applicable state regulatory agencies as well as those on the official service list in this proceeding.

Any person desiring to protest said filing should file a protest with the Federal Energy Regulatory Commission, 888 First Street, NW., Washington, DC 20426, in accordance with Section 385.211 of the Commission's Rules and Regulations. All such protests must be filed on or before June 1, 2000. Protests will be considered by the Commission in determining the appropriate action to be taken, but will not serve to make protestants parties to the proceedings. Copies of this filing are on file with the Commission and are available for public inspection in the Public Reference Room. This filing may be viewed on the web at http://www.ferc.fed.us/online/rims.htm (call 202–208–2222 for assistance).

Linwood A. Watson, Jr.

Acting Secretary.

[FR Doc. 00–13623 Filed 5–31–00; 8:45 am]

BILLING CODE 6717–01–M

DEPARTMENT OF ENERGY

Federal Energy Regulatory Commission

[Docket No. RP98–39–022]

Northern Natural Gas Company; Notice of Filing of Annual Report

May 25, 2000.

Take notice that on May 18, 2000, Northern Natural Gas Company (Northern) submitted its annual report pursuant to the Commissioner's Order in *Public Service Company of Colorado et al.,* Docket Nos. RP97–369–000, *et al.*

Northern further states that copies of the filing have been mailed to each of its affected jurisdictional sales customers.

Any person desiring to protest said filing should file a protest with the Federal Energy Regulatory Commission, 888 First Street, N.E., Washington, DC 20426, in accordance with Section 385.211 of the Commission's Rules and Regulations. All such protests must be filed on or before June 1, 2000. Protests will be considered by the Commission in determining the appropriate action to be taken, but will not serve to make protestants parties to the proceedings. Copies of this filing are on file with the Commission and are available for public inspection in the Public Reference Room. This filing may be viewed on the web at http://www.ferc.fed.us/online/rims.htm (call 202–208–2222 for assistance).

Linwood A. Watson, Jr.,

Acting Secretary.

[FR Doc. 00–13625 Filed 5–31–00; 8:45 am]

BILLING CODE 6717–01–M

DEPARTMENT OF ENERGY

Federal Energy Regulatory Commission

[Docket No. CP00–366–000]

Northwest Pipeline Corporation; Notice of Application

May 25, 2000.

Take notice that on May 16, 2000, Northwest Pipeline Corporation (Northwest or Applicant), 295 Chipeta Way, Salt Lake City, Utah 84108, filed an application pursuant to and in accordance with Section 7(c) of the Natural Gas Act (NGA) and Part 157 of the Commission's regulations, requesting a certificate of public convenience and necessity authorizing the construction and operation of approximately 260 feet of 30-inch mainline loop adjacent to the

Washougal Compressor Station (C.S.) in Clark County, Washington, all as more fully set forth in the application which is on file with the Commission and open to the public inspection. The application may be viewed on the web at *http://www.ferc.us/online/rims.htm* (call 202–208–2222 for assistance).

The proposed pipeline looping will complete Northwest's 30-inch mainline loop between the Washougal C.S. and the Chehalis C.S. Northwest proposes to install the 260 feet of 30-inch pipeline loop and appurtenances (including a pig receiver and drip, a 2-inch dripline from the pig receiver, and an access road to the pig receiver) on existing permanent right-of-way. The proposed facilities will extend northwest from the outlet of the existing Washougal C.S. to connect with Northwest's existing 30-inch mainline loop. According to Northwest, the completion of this final section of loop will not increase the design capacity of its mainline. However, Northwest contends that the 30-inch mainline loop will enhance the reliability of service to its shippers and will allow more flexible and efficient operation of the Washougal C.S.

Northwest estimates that the cost of the proposed facilities will be approximately $938,000, of which approximately $543,000 for the 30-inch loop extension, and approximately $395,000 for the associated auxiliary facilities. Northwest requests expedited Commission approval by August 1, 2000, so that the project can be completed prior to the rainy season in the Pacific Northwest. Northwest states that since the proposed project is designed to maintain reliability and improve efficiency and flexibility, application of the FERC's Policy Statement issued September 15, 1999 in Docket No. PL99–3–000 dictates that all project costs should be permitted rolled-in treatment in Northwest's next rate case.

Any questions regarding this application should be directed to Gary Kotter, Certificates Manager for Northwest, P.O. Box 58900, Salt Lake City, Utah 84158–0900 at (801) 584–7117, or Richard N. Stapler, Jr., Senior Attorney, P.O. Box 58900, Salt Lake City, Utah 84158–0900 at (801) 584–7068.

Any person desiring to be heard or to make protest with reference to said application should on or before June 15, 2000, file with the Federal Energy Regulatory Commission, 888 First Street, NE, Washington, DC 20426, a motion to intervene or a protest in accordance with the requirements of the Commission's Rules of Practice and Procedure (18 CFR 385.211 or 385.214) and the regulations under the Natural Gas Act (18 CFR 157.10). All protests filed with the Commission will be considered by it in determining the appropriate action to be taken but will not serve to make the protestants parties to the proceeding. The Commission's rules require that protestors provide copies of their protests to the party or parties directly involved. Any person wishing to become a party to a proceeding or to participate as a party in any hearing therein must file a motion to intervene in accordance with the Commission's rules.

A person obtaining intervenor status will be placed on the service list maintained by the Commission and will receive copies of all documents filed by the Applicant and by every one of the intervenors. An intervenor can file for rehearing of any Commission order and can petition for court review of any such order. However, an intervenor must submit copies of comments or any other filing it makes with the Commission to every other intervenor in the proceeding, as well as 14 copies with the Commission.

A person does not have to intervene, in order to have comments considered. A person, instead, may submit two copies of comments to the Secretary of the Commission. Commenters will be placed on the Commission's environmental mailing list, will receive copies of environmental documents and will be able to participate in meetings associated with the Commission's environmental review process. Commenters will not be required to serve copies of filed documents on all other parties. However, commenters will not receive copies of all documents filed by other parties or issued by the Commission and will not have the right to seek rehearing or appeal the Commission's final order to a federal court.

The Commission will consider all comments and concerns equally, whether filed by commenters or those requesting intervenor status.

Take further notice that, pursuant to the authority contained in and subject to jurisdiction conferred upon the Commission by Sections 7 and 15 of the NGA and the Commission's Rules of Practice and Procedure, a hearing will be held without further notice before the Commission or its designee on this application if no motion to intervene is filed within the time required herein, if the Commission on its own review of the matter finds that a grant of the certificate is required by the public convenience and necessity. If a motion for leave to intervene is timely filed, or if the Commission on its own motion believes that a formal hearing is required, further notice of such hearing will be duly given.

Under the procedure herein provided for, unless otherwise advised, it will be unnecessary for Northwest to appear or be represented at the hearing.

Linwood A. Watson, Jr.,

Acting Secretary.

[FR Doc. 00–13619 Filed 5–31–00; 8:45 am]

BILLING CODE 6717–01–M

DEPARTMENT OF ENERGY

Federal Energy Regulatory Commission

[Docket No. ER00–2235–000]

Ouachita Power, L.L.C., Notice of Issuance of Order

May 25, 2000.

Ouachita Power, L.L.C. (Ouachita Power) submitted for filing a rate schedule under which Ouachita Power will engage in wholesale electric power and energy transactions as a marketer. Ouachita Power also requested waiver of various Commission regulations. In particular, Ouachita Power requested that the Commission grant blanket approval under 18 CFR part 34 of all future issuances of securities and assumptions of liability by Ouachita Power.

On May 18, 2000, pursuant to delegated authority, the Director, Division of Corporate Applications, Office of Markets, Tariffs and Rates, granted requests for blanket approval under part 34, subject to the following:

Within thirty days of the date of the order, any person desiring to be heard or to protest the blanket approval of issuances of securities or assumptions of liability by Ouachita Power should file a motion to intervene or protest with the Federal Energy Regulatory Commission, 888 First Street, NE., Washington, DC 20426, in accordance with Rules 211 and 214 of the Commission's Rules of Practice and Procedure (18 CFR 385.211 and 385.214).

Absent a request for hearing within this period, Ouachita Power is authorized to issue securities and assume obligations or liabilities as a guarantor, indorser, surety, or otherwise in respect of any security of another person; provided that such issuance or assumption is for some lawful object within the corporate purposes of the applicant, and compatible with the public interest, and is reasonably necessary or appropriate for such purposes.

The Commission reserves the right to require a further showing that neither public nor private interests will be adversely affected by continued approval of Ouachita Power's issuances of securities or assumptions of liability.

Notice is hereby given that the deadline for filing motions to intervene or protests, as set forth above, is June 19, 2000.

Copies of the full text of the Order are available from the Commission's Public Reference Branch, 888 First Street, NE., Washington, DC 20426. The Order may also be viewed on the Internet at *http://www.ferc.fed.us/online/rims.htm* (call 202–208–2222 for assistance.

Linwood A. Watson, Jr.,

Acting Secretary.

[FR Doc. 00–13640 Filed 5–31–00; 8:45 am]

BILLING CODE 6717–01–M

DEPARTMENT OF ENERGY

Federal Energy Regulatory Commission

[Docket No. ER00 2134 00]

PG&E Dispersed Generating Company, LLC; Notice of Issuance of Order

May 25, 2000.

PG&E Dispersed Generating Company, LLC (PG&E Dispersed Generating Company) submitted for filing a rate schedule under which PG&E Dispersed Generating Company will engage in wholesale electric power and energy transactions as a marketer. PG&E Dispersed Generating Company also requested waiver of various Commission regulations. In particular, PG&E Dispersed Generating Company requested that the Commission grant blanket approval under 18 CFR Part 34 of all future issuances of securities and assumptions of liability by PG&E Dispersed Generating Company.

On May 16, 2000, pursuant to delegated authority, the Director, Division of Corporation Applications, Office of Markets, Tariffs and Rates, granted requests for blanket approval under Part 34, subject to the following:

Within thirty days of the date of the order, any person desiring to be heard or to protest the blanket approval of issuances of securities or assumptions of liability by PG&E Dispersed Generating Company should file a motion to intervene or protest with the Federal Energy Regulatory Commission, 888 First Street, N.E., Washington, D.C. 20426, in accordance with Rules 211 and 214 of the Commission's Rules of Practice and Procedure (18 CFR 385.211 and 385.214).

Absent a request for hearing within this period, PG&E Dispersed Generating Company is authorized to issue securities and assume obligations or liabilities as a guarantor, indorser, surety, or otherwise in respect of any security of another person; provided that such issuance or assumption is for some lawful object within the corporate purposes of the applicant, and compatible with the public interest, and is reasonably necessary or appropriate for such purposes.

The Commission reserves the right to require a further showing that neither public nor private interests will be adversely affected by continued approval of PG&E Dispersed Generating Company's issuances of securities or assumptions of liability.

Notice is hereby given that the deadline for filing motions to intervene or protests, as set forth above, is June 15, 2000.

Copies of the full text of the Order are available from the Commission's Public Reference Branch, 888 First Street, N.E., Washington, D.C. 20426. The Order may also be viewed on the Internet at *http://www.ferc.fed.us/online/rims.htm* (call 202–208–2222 for assistance).

Linwood A. Watson, Jr.,

Acting Secretary.

[FR Doc. 00–13636 Filed 5–31–00; 8:45 am]

BILLING CODE 6717–01–M

DEPARTMENT OF ENERGY

Federal Energy Regulatory Commission

[Docket No. RP00–296–000]

South Georgia Natural Gas Company; Request for Waiver of Filing Proposed Changes to FERC Gas Tariff

May 25, 2000.

Take notice that on May 22, 2000, South Georgia Natural Gas Company (South Georgia) tendered for filing the following request for a waiver of filing revised sheets to its FERC Gas Tariff, Second Revised Volume No. 1.

South Georgia states that the request for waiver is submitted pursuant to Section 19.2 of the General Terms and Conditions of its Tariff to adjust its fuel retention percentage (FRP) for all transportation services on its system. The derivation of the revised FRP is based on South Georgia's gas required for operations (GRO) for the twelve-month period ending April 30, 2000, adjusted for the balance accumulated in the Deferred GRO Account at the end of said period, divided by the transportation volumes received during the same twelve-month period. In the filing, South Georgia requests a waiver due to the Stipulation and Agreement (''S&A'') filed by Southern Natural Gas Company (Southern Natural) on March 10, 2000 in Docket No. RP99–496.

The S&A proposes, upon authorization of the Commission, South Georgia will be terminated as a separate pipeline company and South Georgia's facilities will be included in Southern Natural's system. Approval of the stipulation by the Commission will constitute approval by the Commission of various certificate and abandonment applications. The addition of the South Georgia facilities to the Southern Natural system will be made effective as of the later of: (a) August 1, 2000; or (b) the first day of the second month following: (i) A final FERC order approving the stipulation; and (ii) the issuance of any other FERC authorization that may be required. As a result, South Georgia is requesting this waiver of Section 19.2 of the General Terms and Conditions of its Tariff to postpone changing its FRP pending approval of the S&A. Upon approval of the S&A, South Georgia proposes to true-up its fuel over or undercollection for the period beginning May 1, 1999 and ending immediately prior to the merger of South Georgia with Southern Natural through a one time cash-out of such over or undercollection.

Any person desiring to be heard or to protest said filing should file a motion to intervene or a protest with the Federal Energy Regulatory Commission, 888 First Street, N.E., Washington, D.C. 20426, in accordance with Sections 385.214 or 385.211 of the Commission's Rules and Regulations. All such motions or protests must be filed on or before June 1, 2000. Protests will be considered by the Commission in determining the appropriate action to be taken, but will not serve to make protestants parties to the proceedings. Any person wishing to become a party must file a motion to intervene. Copies of this filing are on file with the Commission and are available for public inspection in the Public Reference Room. This filing may be viewed on the web at http://www.ferc.fed.us/online/rims.htm (call 202–208–2222 for assistance).

Linwood A. Watson, Jr.,

Acting Secretary.

[FR Doc. 00–13632 Filed 5–31–00; 8:45 am]

BILLING CODE 6717–01–M

DEPARTMENT OF ENERGY

Federal Energy Regulatory Commission

[Docket No. RP00–295–000]

Tennessee Gas Pipeline Company; Notice of Tariff Filing

May 25, 2000.

Take notice that on May 22, 2000, Tennessee Gas Pipeline Company (Tennessee), tendered for filing, for inclusion in Tennessee's FERC Gas Tariff, Fifth Revised Volume No. 1, Fifth Revised Sheet No. 356, with an effective date of June 21, 2000.

Tennessee states that the purpose of this filing is to modify its Tariff to extend the time period for payment after receipt of invoice by shippers who are entities of foreign governments and whose compliance with required governmental accounting practices do not conform to the invoice and payment provisions of Tennessee's Tariff. Tennessee further states that, if the proposed modifications are accepted, it will avoid the necessity of making individual filings of transportation service agreements entered into with these shippers because these transportation services agreements may contain ''material deviations'' from the pro forma transportation service agreements. Tennessee requests an effective date of June 21, 2000.

Any person desiring to be heard or to protest said filing should file a motion to intervene or a protest with the Federal Energy Regulatory Commission, 888 First Street, N.E., Washington, D.C. 20426, in accordance with Sections 385.214 or 385.211 of the Commission's Rules and Regulations. All such motions or protests must be filed in accordance with Section 154.210 of the Commission's Regulations. Protests will be considered by the Commission in determining the appropriate action to be taken, but will not serve to make protestants parties to the proceedings. Any person wishing to become a party must file a motion to intervene. Copies of this filing are on file with the Commission and are available for public inspection in the Public Reference Room. This filing may be viewed on the web at http://www.ferc.fed.us/online/rims.htm (call 202–208–2222 for assistance).

Linwood A. Watson, Jr.,

Acting Secretary.

[FR Doc. 00–13631 Filed 5–31–00; 8:45 am]

BILLING CODE 6717–01–M

DEPARTMENT OF ENERGY

Federal Energy Regulatory Commission

[Docket No. ER00–1780–000 and ER00–1780–001]

Texas Electric Marketing, L.L.C., Notice of Issuance of Order

May 25, 2000.

Texas Electric Marketing, L.L.C. (Texas Electric) submitted for filing a rate schedule under which Texas Electric will engage in wholesale electric power and energy transactions as a marketer. Texas Electric also requested waiver of various Commission regulations. In particular, Texas Electric requested that the Commission grant blanket approval under 18 CFR part 34 of all future issuances of securities and assumptions of liability by Texas Electric.

On May 18, 2000, pursuant to delegated authority, the Director, Division of Corporate Applications, Office of Markets, Tariffs and Rates, granted requests for blanket approval under part 34, subject to the following:

Within thirty days of the date of the order, any person desiring to be heard or to protest the blanket approval of issuances of securities or assumptions of liability by Texas Electric should file a motion to intervene or protest with the Federal Energy Regulatory Commission, 888 First Street, N.E., Washington, DC 20426, in accordance with Rules 211 and 214 of the Commission's Rules of Practice and Procedure (18 CFR 385.211 and 385.214).

Absent a request for hearing within this period, Texas Electric is authorized to issue securities and assume obligations or liabilities as a guarantor, indorser, surety, or otherwise in respect of any security of another person; provided that such issuance or assumption is for some lawful object within the corporate purposes of the applicant, and compatible with the public interest, and is reasonably necessary or appropriate for such purposes.

The Commission reserves the right to require a further showing that neither public nor private interests will be adversely affected by continued approval of Texas Electric's issuances of securities or assumptions of liability.

Notice is hereby given that the deadline of filing motions to intervene or protests, as set forth above, is June 19, 2000.

Copies of the full text of the Order are available from the Commissions's Public Reference Branch, 888 First Street, NE., Washington, DC 20426. The Order may also be viewed on the Interenet at *http://www.ferc.fed.us/online/rims.htm* (call 202–208–2222 for assistance).

Linwood A. Watson, Jr.,

Acting Secretary.

[FR Doc. 00–13639 Filed 5–31–00; 8:45 am]

BILLING CODE 6717–01–M

DEPARTMENT OF ENERGY

Federal Energy Regulatory Commission

[Docket No. RP00–294–000]

TransColorado Gas Transmission Company; Notice of Tariff Filing

May 25, 2000.

Take notice that on May 22, 2000, TransColorado Gas Transmission Company (TransColorado) tendered for filing to become part of its FERC Gas Tariff, Original Volume No. 1, Fourth Revised Sheet Nos. 205 and 206 and Second Revised Sheet No. 206A, to be effective June 1, 2000.

In Order No. 587–G, in Docket No. RM96–1–007 the Commission required that interstate pipeline companies conduct all business transactions using internet communication, implementing standards for these communications. The original implementation date for these requirements was June 1, 1999. However, in Order No. 587–1, the Commission deferred the implementation date to June 1, 2000. The purpose of this filing was to make changes to TransColorado's tariff associated with implementation of internet communications effective June 1, 2000.

TransColorado states that a copy of this filing has been served upon TransColorado's customers, the Colorado Public Utilities Commission and New Mexico Public Utilities Commission.

Any person desiring to be heard or to protest said filing should file a motion to intervene or a protest with the Federal Energy Regulatory Commission, 888 First Street, NE., Washington, DC 20426, in accordance with Sections 385.214 or 385.211 of the Commission's Rules and Regulations. All such motions or protests must be filed in accordance with Section 154.210 of the Commission's Regulations. Protests will be considered by the Commission in determining the appropriate action to be taken, but will not serve to make protestants parties to the proceedings. Any person wishing to become a party must file a motion to intervene. Copies of this filing are on file with the Commission and are available for public

inspection in the Public Reference Room. This filing may be viewed on the web at http://www.ferc.fed.us/online/rims.htm. (call 202–208–2222 for assistance).

Linwood A. Watson, Jr.,

Acting Secretary.

[FR Doc. 00–13630 Filed 5–31–00; 8:45 am]

BILLING CODE 6717–01–M

DEPARTMENT OF ENERGY

Federal Energy Regulatory Commission

[Docket No. RP00–291–000]

Trunkline LNG Company; Notice of Proposed Changes in FERC Gas Tariff

May 25, 2000.

Take notice that on May 19, 2000, Trunkline LNG Company (TLNG) tendered for filing as part of its FERC Gas Tariff, Original Volume No. 1–A, the tariff sheets listed on Appendix A to the filing, with an effective date of July 1, 2000.

TLNG states that the filing is being made in accordance with the provisions of Section 154.202 of the Commission's Regulations, to implement Rate Schedule LLS for LNG Lending Service on TLNG's system pursuant to TLNG's blanket authority under Part 284 of the Commission's Regulations. In addition to Rate Schedule LLS and its form of service agreement, TLNG is also proposing certain conforming changes to the General Terms and Conditions.

TLNG states that copies of the filing are being served on all affected customers and applicable state regulatory agencies.

Any person desiring to be heard or to protest said filing should file a motion to intervene or a protest with the Federal Energy Regulatory Commission, 888 First Street, NE, Washington, DC 20426, in accordance with Sections 385.214 or 385.211 of the Commission's Rules and Regulations. All such motions or protests must be filed in accordance with Section 154.210 of the Commission's Regulations. Protests will be considered by the Commission in determining the appropriate action to be taken, but will not serve to make protestants parties to the proceedings. Any person wishing to become a party must file a motion to intervene. Copies of this filing are on file with the Commission and are available for public inspection in the Public Reference Room. This filing may be viewed on the web at http://www.ferc.fed.us/online/rims.htm (call 202–208–2222 for assistance).

Linwood A. Watson, Jr.,

Acting Secretary.

[FR Doc. 00–13627 Filed 5–31–00; 8:45am]

BILLING CODE 6717–01–M

DEPARTMENT OF ENERGY

Federal Energy Regulatory Commission

[Project No. 2197–038; North Carolina]

Yadkin, Inc.; Notice of Availability of Environmental Assessment

May 25, 2000.

An environmental assessment (EA) is available for public review. The EA analyzes the environmental effects of a request to amend the license to authorize upgrades of turbines and generators at three of the four developments of the Yadkin Hydroelectric Project located on the Yadkin-Pee Dee River in Montgomery, Stanly, Davidson, Rowan, and Davie Counties, North Carolina. The Yadkin Hydroelectric Project contains the following reservoirs: High Rock, Tuckertown, Narrows (Badin) and Falls.

The EA was written by staff in the Office of Energy Projects, Federal Energy Regulatory Commission. The proposed upgrade would not constitute a major federal action significantly affecting the quality of the human environment. Copies of the EA assistance. Copies are also available for inspection and reproduction at the Commission's Public Reference Room located at 888 First Street, NE., Room 2A, Washington, DC 20426, or by calling (202) 208–1371.

Anyone may file comments on the EA. The public, federal and state resource agencies are encouraged to provide comments. All written comments must be filed within 30 days of the issuance date of this notice shown above. Send an original and eight copies of all comments marked with the project number P–2197–038 to: The Secretary, Federal Energy Regulatory Commission, 888 First Street, NE, Washington, DC 20426. If you have any questions regarding this notice, please contact R. Feller at telephone: (202) 219–2796 or e-mail: rainer.feller@ferc.fed.us

Linwood A. Watson, Jr.,

Acting Secretary.

[FR Doc. 00–13620 Filed 5–31–00; 8:45 am]

BILLING CODE 6717–01–M

DEPARTMENT OF ENERGY

Federal Energy Regulatory Commission

[Docket No. ER00–2365–001, et al.]

Ameren Service Company, et al.; Electric Rate and Corporate Regulation Filings

May 24, 2000.

Take notice that the following filings have been made with the Commission:

1. Ameren Service Company

[Docket No. ER00–2365–001]

Take notice that on May 19, 2000, Ameren Services Company (Ameren), tendered for filing a substitute revised unexecuted Network Integration Transmission Service Agreement (revised Agreement) with Clay Electric Cooperative, Inc. (Clay) under Ameren's Open Access Transmission Tariff. This revised Agreement is intended as a substitute for the document filed in the above-captioned proceeding on May 1, 2000. Ameren states that it has corrected a misstated rate in the document in Paragraph 7.0 and that this correction is the only change in the document.

Ameren continues to seek an effective date of June 1, 2000.

Copies of the filing have been served on Clay and the Illinois Commerce Commission.

Comment date: June 9, 2000, in accordance with Standard Paragraph E at the end of this notice.

2. Western Resources, Inc.

[Docket Nos. ER00–2501–001 and ER00–2502–001]

Take notice that on May 19, 2000, Western Resources, Inc. (Western), tendered for filing corrected Service Schedule WTU–5/2000, which will supercede Service Schedule WTU–3/94. Service Schedule WTU–5/2000, as corrected, substitutes for Service Schedule WTU–6/2000 previously filed in Docket No. ER00–2502–000, but not yet accepted by the Commission and is proposed to be effective as of May 1, 2000.

In addition, Western requests an effective date of May 1, 2000, for the related contract amendments filed in Docket No. ER00–2501–000.

A copy of this filing was served upon the Kansas Corporation Commission and the wholesale customers who take service under the aforementioned Service Schedule.

Comment date: June 9, 2000, in accordance with Standard Paragraph E at the end of this notice.

3. Commonwealth Edison Company

[Docket No. ER00–2531–000]

Take notice that on May 19, 2000, Commonwealth Edison Company, tendered for filing an executed signature page inadvertently omitted from its May 17, 2000, filing made with the Commission in the above-referenced docket.

Comment date: June 9, 2000, in accordance with Standard Paragraph E at the end of this notice.

4. MidAmerican Energy Company

[Docket No. ER00–2544–000]

Take notice that on May 19, 2000, MidAmerican Energy Company (MidAmerican), 666 Grand Avenue, Des Moines, Iowa 50309, filed with the Commission a Firm Transmission Service Agreement with Sempra Energy Trading Corporation, dated May 11, 2000, and a Non-Firm Transmission Service Agreement with Sempra Energy, dated May 11, 2000, entered into pursuant to MidAmerican's Open Access Transmission Tariff.

MidAmerican requests an effective date of May 11, 2000, for the Agreements with Sempra Energy, and accordingly seeks a waiver of the Commission's notice requirement.

MidAmerican has served a copy of the filing on Sempra Energy, the Iowa Utilities Board, the Illinois Commerce Commission and the South Dakota Public Utilities Commission.

Comment date: June 9, 2000, in accordance with Standard Paragraph E at the end of this notice.

5. MidAmerican Energy Company

[Docket No. ER00–2545–000]

Take notice that on May 19, 2000, MidAmerican Energy Company (MidAmerican), 666 Grand Avenue, Des Moines, Iowa 50309, tendered for filing with the Commission a Firm Transmission Service Agreement with Cargill-Alliant, LLC, dated April 25, 2000, and a Non-Firm Transmission Service Agreement with Cargill-Alliant, dated April 25, 2000, entered into pursuant to MidAmerican's Open Access Transmission Tariff.

MidAmerican requests an effective date of April 25, 2000, for the Agreements with Cargill-Alliant, and accordingly seeks a waiver of the Commission's notice requirement.

MidAmerican has served a copy of the filing on Cargill-Alliant, the Iowa Utilities Board, the Illinois Commerce Commission and the South Dakota Public Utilities Commission.

Comment date: June 9, 2000, in accordance with Standard Paragraph E at the end of this notice.

6. Allegheny Energy Service Corporation, on behalf of Allegheny Energy Supply Company, LLC

[Docket No. ER00–2546–000]

Take notice that on May 19, 2000, Allegheny Energy Service Corporation on behalf of Allegheny Energy Supply Company, LLC (Allegheny Energy Supply) tendered for filing Amendment No. 2 to Supplement No. 11 to the Market Rate Tariff to incorporate a Netting Agreement with PG&E Energy Trading-Power, L.P., into the tariff provisions.

Allegheny Energy Supply requests a waiver of notice requirements to make the Amendment effective as of May 4, 2000 or such other date as ordered by the Commission.

Copies of the filing have been provided to the Public Utilities Commission of Ohio, the Pennsylvania Public Utility Commission, the Maryland Public Service Commission, the Virginia State Corporation Commission, the West Virginia Public Service Commission, and all parties of record.

Comment date: June 9, 2000, in accordance with Standard Paragraph E at the end of this notice.

7. Southern Company Services, Inc.

[Docket No. ER00–2547–000]

Take notice that on May 19, 2000, Southern Company Services, Inc., as agent for Alabama Power Company, Georgia Power Company, Gulf Power Company, Mississippi Power Company, and Savannah Electric and Power Company (Southern Companies) tendered for filing the Generator Backup Service Agreement by and between West Georgia Generating Company L.P. (West Georgia) and Southern Companies (the Service Agreement) under Southern Companies' Generator Backup Service Tariff (FERC Electric Tariff, Original Volume No. 9). The Service Agreement supplies West Georgia with unscheduled capacity and energy in connection with sales from its electric generating facility as a replacement for unintentional differences between the facility's actual metered generation and its scheduled generation. The Service Agreement is dated as of May 11, 2000, and shall terminate upon twelve months prior written notice of either party.

Comment date: June 9, 2000, in accordance with Standard Paragraph E at the end of this notice.

8. Arizona Public Service Company

[Docket No. ER00–2548–000]

Take notice that on May 19, 2000, Arizona Public Service Company (APS), tendered for filing amendments to the Four Corners Co-tenancy Agreement and the Four Corners Operating Agreement.

A copy of this filing has been served on El Paso Electric Company, Public Service Company of New Mexico, Salt River Project Agricultural Improvement and Power District, Southern California Edison Company, Tucson Electric Power Company, the Arizona Corporation Commission, the California Public Utilities Commission, the Texas Public Utilities Commission and the New Mexico Public Service Commission.

Comment date: June 9, 2000, in accordance with Standard Paragraph E at the end of this notice.

9. Commonwealth Edison Company

[Docket No. ER00–2549–000]

Take notice that on May 19, 2000, Commonwealth Edison Company (ComEd) tendered for filing executed service agreements for Nicor Energy L.L.C. (Nicor) and Dynegy Energy Services, Inc. (Dynegy) under ComEd's FERC Electric Market Based-Rate Schedule for power sales.

ComEd requests an effective date of May 16, 2000 for the service agreements and accordingly seeks waiver of the Commission's notice requirements.

Copies of this filing were served on Nicor and Dynegy.

Comment date: June 9, 2000, in accordance with Standard Paragraph E at the end of this notice.

10. Columbia Energy Power Marketing Corporation

[Docket No. ER00–2550–000]

Take notice that on May 19, 2000, Columbia Energy Power Marketing Corporation tendered for filing an amendment to its rate schedule to prohibit sales under the rate schedule to affiliates with franchised retail electric service territories.

Comment date: June 9, 2000, in accordance with Standard Paragraph E at the end of this notice.

11. Detroit Edison Company

[Docket No. ER00–2551–000]

Take notice that on May 19, 2000, Detroit Edison Company tendered for filing a Temporary Parallel Operation Interconnection Agreement between Detroit Edison Company and Dearborn Industrial Generation, L.L.C.

Comment date: June 9, 2000, in accordance with Standard Paragraph E at the end of this notice.

12. PJM Interconnection, L.L.C.

[Docket No. ER00–2552–000]

Take notice that on May 19, 2000, PJM Interconnection, L.L.C. (PJM),

tendered for filing a firm point-to-point transmission service agreement with Delmarva Power & Light Company, and a network integration transmission service agreement with UGI Utilities, Inc., under the PJM Open Access Transmission Tariff.

Copies of this filing were served upon the parties to the service agreements and the state commissions within the PJM control area.

Comment date: June 9, 2000, in accordance with Standard Paragraph E at the end of this notice.

Standard Paragraphs

E. Any person desiring to be heard or to protest such filing should file a motion to intervene or protest with the Federal Energy Regulatory Commission, 888 First Street, NE, Washington, DC 20426, in accordance with Rules 211 and 214 of the Commission's Rules of Practice and Procedure (18 CFR 385.211 and 385.214). All such motions or protests should be filed on or before the comment date. Protests will be considered by the Commission in determining the appropriate action to be taken, but will not serve to make protestants parties to the proceeding. Any person wishing to become a party must file a motion to intervene. Copies of these filings are on file with the Commission and are available for public inspection. This filing may also be viewed on the Internet at http://www.ferc.fed.us/online/rims.htm (call 202–208–2222 for assistance).

Linwood A. Watson, Jr.,

Acting Secretary.

[FR Doc. 00–13667 Filed 5–31–00; 8:45 am]

BILLING CODE 6717–01–P

DEPARTMENT OF ENERGY

Federal Energy Regulatory Commission

Notice of Application Accepted for Filing and Soliciting Motions To Intervene, Protests, and Comments

May 25, 2000.

Take notice that the following hydroelectric application has been filed with the Commission and is available for public inspection:

a. *Type of Application:* Preliminary Permit.

b. *Project No.:* 11839–000.

c. *Date filed:* May 8, 2000.

d. *Applicant:* Universal Electric Power Corporation.

e. *Name of Project:* Emsworth L&D Project.

f. *Location:* On the Ohio River in Allegheny County, Pennsylvania. Would utilize the U.S. Army Corps of Engineer's Emsworth L&D.

g. *Filed Pursuant to:* Federal Power Act, 16 U.S.C. 791(a)–825(r).

h. *Applicant Contact:* Gregory S. Feltenberger, Universal Electric Power Corporation, 1145 Highbrook Street, Akron, OH 44302, (330) 535–7115.

i. *FERC Contact:* Robert Bell, 202–219–2806.

j. *Deadline for filing motions to intervene, protests and comments:* 60 days from the issuance date of this notice.

All documents (original and eight copies) should be filed with: David P. Boergers, Secretary, Federal Energy Regulatory Commission, 888 First Street, NE, Washington, DC 20426.

The Commission's Rules of Practice and Procedure require all interveners filing documents with the Commission to serve a copy of that document on each person in the official service list for the project. Further, if an intervener files comments or documents with the Commission relating to the merits of an issue that may affect the responsibilities of a particular resource agency, they must also serve a copy of the document on that resource agency.

k. *The proposed project utilizing the existing U.S. Army Corps of Engineer's Emsworth L&D would consist of:* (1) A proposed intake; (2) 14 proposed 80-foot-long, 92-inch diameter steel penstocks; (3) a proposed powerhouse containing 14 generating units having a total installed capacity of 18 MW; (4) a proposed Tailrace; (5) a proposed 200-foot-long, 14.7 kV transmission line; and (6) appurtenant facilities.

The project would have an annual generation of 110 GWh and project power would be sold to a local utility.

1. A copy of the application is available for inspection and reproduction at the Commission's Public Reference Room, located at 888 First Street, NE, Room 2A, Washington, DC 20426, or by calling (202) 208–1371. The application may be viewed on http://www.ferc.fed.us/online/rims.htm (call (202)208–2222 for assistance). A copy is also available for inspection and reproduction at the address in item h above.

Preliminary Permit—Anyone desiring to file a competing application for preliminary permit for a proposed project must submit the competing application itself, or a notice of intent to file such an application, to the Commission on or before the specified comment date for the particular application (see 18 CFR 4.36). Submission of a timely notice of intent allows an interested person to file the competing preliminary permit application no later than 30 days after the specified comment date for the particular application. A competing preliminary permit application must conform with 18 CFR 4.30(b) and 4.36.

Preliminary Permit—Any qualified development applicant desiring to file a competing development application must submit to the Commission, on or before a specified comment date for the particular application, either a competing development application or a notice of intent to file such an application. Submission of a timely notice of intent to file a development application allows an interested person to file the competing application no later than 120 days after the specified comment date for the particular application. A competing license application must conform with 18 CFR 4.30(b) and 4.36.

Notice of intent—A notice of intent must specify the exact name, business address, and telephone number of the prospective applicant, and must include an unequivocal statement of intent to submit, if such an application may be filed, either a preliminary permit application or a development application (specify which type of application). A notice of intent must be served on the applicant(s) named in this public notice.

Proposed Scope of Studies under Permit—A preliminary permit, if issued, does not authorize construction. The term of the proposed preliminary permit would be 36 months. The work proposed under the preliminary permit would include economic analysis, preparation of preliminary engineering plans, and a study of environmental impacts. Based on the results of these studies, the Applicant would decide whether to proceed with the preparation of a development application to construct and operate the project.

Comments, Protests, or Motions to Intervene—Anyone may submit comments, a protest, or a motion to intervene in accordance with the requirements of Rules of Practice and Procedure 18 CFR 385.210, .211, .214. In determining the appropriate action to take, the Commission will consider all protests or other comments filed, but only those who file a motion to intervene in accordance with the Commission's Rules may become a party to the proceeding. Any comments, protests, or motions to intervene must be received on or before the specified comment date for the particular application.

Filing and Service of Responsive Documents—Any filings must bear in all capital letters the title ''COMMENTS'', ''NOTICE OF INTENT

TO FILE COMPETING APPLICATION'', ''COMPETING APPLICATION'', ''PROTEST'', ''MOTION TO INTERVENE'', as applicable, and the Project Number of the particular application to which the filing refers. Any of the above-named documents must be filed by providing the original and the number of copies provided by the Commission's regulations to: The Secretary, Federal Energy Regulatory Commission, 888 First Street, NE., Washington, DC 20426. An additional copy must be sent to Director, Division of Project Review, Federal Energy Regulatory Commission, at the above-mentioned address. A copy of any notice of intent, competing application or motion to intervene must also be served upon each representative of the Applicant specified in the particular application.

Agency Comments—Federal, state, and local agencies are invited to file comments on the described application. A copy of the application may be obtained by agencies directly from the Applicant. If an agency does not file comments within the time specified for filing comments, it will be presumed to have no comments. One copy of an agency's comments must also be sent to the Applicant's representatives.

Linwood A. Watson, Jr.,

Acting Secretary.

[FR Doc. 00–13621 Filed 5–31–00; 8:45 am]

BILLING CODE 6717–01–M

DEPARTMENT OF ENERGY

Federal Energy Regulatory Commission

Notice of Application Accepted for Filing and Soliciting Motions To Intervene, Protests, and Comments

May 25, 2000.

Take notice that the following hydroelectric application has been filed with the Commission and is available for public inspection:

a. *Type of Application:* Preliminary Permit.

b. *Project No.:* 11840–000.

c. *Date filed:* May 8, 2000.

d. *Applicant:* Universal Electric Power Corporation.

e. *Name of Project:* Tygart Dam Project.

f. *Location:* On the Tygart River in Grafton County, West Virginia. Would utilize the U.S. Army Corps of Engineer's Tygart Dam.

g. *Filed Pursuant to:* Federal Power Act, 16 USC 791(a)–825(r).

h. *Applicant Contact:* Gregory S. Feltenberger, Universal Electric Power Corporation, 1145 Highbrook Street, Akron, OH 44302, (330) 535–7115.

i. *FERC Contact:* Robert Bell, 202–219–2806.

j. *Deadline for filing motions to intervene, protests and comments:* 60 days from the issuance date of this notice.

All documents (original and eight copies) should be filed with: David P. Boergers, Secretary, Federal Energy Regulatory Commission, 888 First Street, NE, Washington, DC 20426.

The Commission's Rules of Practice and Procedure require all interveners filing documents with the Commission to serve a copy of that document on each person in the official service list for the project. Further, if an intervener files comments or documents with the Commission relating to the merits of an issue that may affect the responsibilities of a particular resource agency, they must also serve a copy of the document on that resource agency.

k. *The proposed project utilizing the existing U.S. Army of Engineer's Emsworth L&D would consist of:* (1) A proposed intake; (2) a proposed 350-foot-long, 192-inch diameter steel penstocks; (3) a proposed powerhouse containing two generating units have a total installed capacity of 14 MW; (4) a proposed Tailrace; (5) a proposed 400-foot-long, 14.7 kV transmission line; and (6) appurtenant facilities.

The project would have an annual generation of 85.8 GWh and project power would be sold to a local utility.

l. A copy of the application is available for inspection and reproduction at the Commission's Public Reference Room, located at 888 First Street, NE, Room 2A, Washington, DC 20426, or by calling (202) 208–1371. The application may be viewed on http://www.ferc.fed.us/online/rims.htm (call (202) 208–2222 for assistance). A copy is also available for inspection and reproduction at the address in item h above.

Preliminary Permit—Anyone desiring to file a competing application for preliminary permit for a proposed project must submit the competing application itself, or a notice of intent to file such an application, to the Commission on or before the specified comment date for the particular application (see 18 CFR 4.36). Submission of a timely notice of intent allows an interested person to file the competing preliminary permit application no later than 30 days after the specified comment date for the particular application. A competing preliminary permit application must conform with 18 CFR 4.30(b) and 4.36.

Preliminary Permit—Any qualified development applicant desiring to file a competing development application must submit to the Commission, on or before a specified comment date for the particular application, either a competing development application or a notice of intent to file such an application. Submission of a timely notice of intent to file a development application allows an interested person to file the competing application no later than 120 days after the specified comment date for the particular application. A competing license application must conform with 18 CFR 4.30(b) and 4.36.

Notice of intent—A notice of intent must specify the exact name, business address, and telephone number of the prospective applicant, and must include an unequivocal statement of intent to submit, if such an application may be filed, either a preliminary permit application or a development application (specify which type of application). A notice of intent must be served on the applicant(s) named in this public notice.

Proposed Scope of Studies under Permit—A preliminary permit, if issued, does not authorize construction. The term of the proposed preliminary permit would be 36 months. The work proposed under the preliminary permit would include economic analysis, preparation of preliminary engineering plans, and a study of environmental impacts. Based on the results of these studies, the Applicant would decide whether to proceed with the preparation of a development application to construct and operate the project.

Comments, Protests, or Motions to Intervene—Anyone may submit comments, a protest or a motion to intervene in accordance with the requirements of Rules of Practice and Procedure, 18 CFR 385.210, .211, .214. In determining the appropriate action to take, the Commission will consider all protests or other comments filed, but only those who file a motion to intervene in accordance with the Commission's Rules may become a party to the proceeding. Any comments, protests, or motions to intervene must be received on or before the specified comment date for the particular application.

Filing and Service of Responsive Documents—Any filings must bear in all capital letters the title ''COMMENTS'', ''NOTICE OF INTENT TO FILE COMPETING APPLICATION'', ''COMPETING APPLICATION'', ''PROTEST'', ''MOTION TO INTERVENE'', as applicable, and the Project Number of the particular

application to which the filing refers. Any of the above-named documents must be filed by providing the original and the number of copies provided by the Commission's regulations to: The Secretary, Federal Energy Regulatory Commission, 888 First Street NE, Washington, DC 20426. An additional copy must be sent to Director, Division of Project Review, Federal Energy Regulatory Commission, at the above-mentioned address. A copy of any notice of intent, competing application or motion to intervene must also be served upon each representative of the Applicant specified in the particular application.

Agency Comments—Federal, state, and local agencies are invited to file comments on the described application. A copy of the application may be obtained by agencies directly from the Applicant. If an agency does not filed comments within the time specified for filing comments, it will be presumed to have no comments. One copy of an agency's comments must also be sent to the Applicant's representatives.

Linwood A. Watson, Jr.,

Acting Secretary.

[FR Doc. 00–13622 Filed 5–31–00; 8:45 am]

BILLING CODE 6717–01–M

ENVIRONMENTAL PROTECTION AGENCY

[OPP–170005; FRL–6559–3]

Pesticides; Guidance on Pesticide Import Tolerances and Residue Data for Imported Food; Request for Comment

AGENCY: Environmental Protection Agency (EPA).

ACTION: Notice and request for comment.

SUMMARY: This document provides detailed guidance on applying current U.S. data requirements for the establishment or continuance of tolerances for pesticide residues in or on imported foods. The purpose of this guidance is to promote greater transparency and provide clear guidance to interested parties on how to obtain an import tolerance. This guidance includes information on how to adapt data requirements for U.S. food uses to import tolerances, both for establishing new import tolerances and for modifying or maintaining existing U.S. tolerances for import purposes when U.S. uses or registrations are canceled. The Agency is soliciting comments on the approach reflected in this detailed guidance.

In addition, the Agency expects to consider certain information on pesticide use outside the U.S. and resulting pesticide chemical residues in or on imported food to establish or modify tolerances when there is a corresponding U.S. registration and use. EPA may also require additional information and/or data to better characterize the nature of residues in or on imports when such information and/or data are necessary to make the required safety finding during registration, reregistration, or tolerance reassessment. This would apply to a limited number of cases when imported commodities comprise a high percentage of U.S. consumption; domestic residue data are not likely to be representative of growing conditions in other countries; and U.S. consumers would likely be exposed to significant residues in imported foods. The Agency is developing criteria to implement this requirement and is soliciting comments.

In addition to meeting the requirements of the Federal Food, Drug, and Cosmetic Act (FFDCA), as amended by the Food Quality Protection Act of 1996 (FQPA), this guidance has been developed consistent with the goals of the North American Free Trade Agreement (NAFTA), including minimizing trade irritants among the NAFTA countries. This document also addresses the U.S. obligations under the World Trade Organization Agreement on the Application of Sanitary and Phytosanitary Measures.

DATES: Comments, identified by the docket number OPP–170005, must be received on or before July 31, 2000.

ADDRESSES: Comments may be submitted by mail, electronically, or in person. Please follow the detailed instructions for each method as provided in Unit I. of the **SUPPLEMENTARY INFORMATION** section of this notice.

FOR FURTHER INFORMATION CONTACT: Kimberly Lowe, Office of Pesticide Programs, Special Review and Reregistration Division (7508C), Environmental Protection Agency, 1200 Pennsylvania Ave., NW., Washington, DC 20460, telephone number: 703–308–8059; fax number: 703–308–8041, e-mail address: lowe.kimberly@epa.gov

SUPPLEMENTARY INFORMATION:

I. Does this Action Apply to Me?

You may be affected by this notice if you sell, distribute, manufacture, or use pesticides for agricultural applications, process food, distribute or sell food, or implement governmental pesticide regulations. Potentially affected categories and entities may include, but are not limited to the following:

Category	NAICS Codes	Examples of Potentially Affected Entities
Food manufacturers	311	Commercial food processors
Pesticide manufacturers	32532	Pesticide registrants Pesticide producers

This table is not intended to be exhaustive, but rather provides a guide for readers regarding entities likely to be affected by this action. Other types of entities not listed in this table could also be affected. If you have any questions regarding the applicability of this action to a particular entity, you can consult with the person listed under ''FOR FURTHER INFORMATION CONTACT.''

II. How Can I Get Additional Information or Copies of this Document or Other Documents?

1. *Electronically*. You may obtain electronic copies of this document and various support documents from the EPA Internet Home Page at http://www.epa.gov/. On the Home Page select ''Laws and Regulations'' and then look up the entry for this document under the ''**Federal Register**— Environmental Documents.'' You can also go directly to the ''**Federal Register**'' listings at http://www.epa.gov/fedrgstr/.

2. *In person or by phone*. If you have any questions or need additional information about this action, you may contact the technical person identified in the ''FOR FURTHER INFORMATION CONTACT'' section. In addition, the official record for this notice, including the public version, has been established under docket control number OPP–170005, (including comments and data submitted electronically as described

below). A public version of this record, including printed, paper versions of any electronic comments, which does not include any information claimed as CBI, is available for inspection in Rm. 119, Crystal Mall #2, 1921 Jefferson Davis Highway, Arlington, VA, from 8:30 a.m. to 4 p.m., Monday through Friday, excluding legal holidays. The Public Information and Records Integrity Branch telephone number is 703–305–5805.

III. How Can I Respond to This Notice?

A. How and to Whom Do I Submit Comments?

You may submit comments through the mail, in person, or electronically. Be sure to identify the appropriate docket number (i.e., ''OPP–170005'') in your correspondence.

1. *By mail*. Submit written comments to: Public Information and Records Integrity Branch, Information Resources and Services Division (7502C), Office of Pesticide Programs, Environmental Protection Agency, 1200 Pennsylvania Ave., NW., Washington, DC 20460.

2. *In person or by courier*. Deliver written comments to: Public Information and Records Integrity Branch, Information Resources and Services Division (7502C), Office of Pesticide Programs, Environmental Protection Agency, Rm. 119, Crystal Mall #2, 1921 Jefferson Davis Highway, Arlington, VA.

3. *Electronically*. Submit your comments and/or data electronically by e-mail to: opp-docket@epa.gov. Do not submit any information electronically that you consider to be Confidential Business Information (CBI). Submit electronic comments as an ASCII file, avoiding the use of special characters and any form of encryption. Comment and data will also be accepted on standard computer disks in WordPerfect 5.1/6.1 or ASCII file format. All comments and data in electronic form must be identified by the docket control number OPP–170005. Electronic comments on this notice may also be filed online at many Federal Depository Libraries.

B. How Should I Handle CBI Information that I Want to Submit to the Agency?

You may claim information that you submit in response to this document as CBI by marking any part or all of that information as CBI. Information so marked will not be disclosed except in accordance with procedures set forth in 40 CFR part 2. A copy of the comment that does not contain CBI must be submitted for inclusion in the public record. Information not marked confidential will be included in the public docket by EPA without prior notice. If you have any questions about CBI or the procedures for claiming CBI, please consult with the technical person identified in the ''FOR FURTHER INFORMATION CONTACT'' section.

IV. Guidance on Import Tolerances

A. Introduction

This document describes the EPA guidance regarding pesticide residues in or on imported foods. In particular, by this document, EPA is informing interested parties of the steps they must take to obtain a new import tolerance (a tolerance that does not have a related U.S. registration) or to maintain an existing tolerance as an import tolerance when the corresponding domestic use has been canceled. In addition, EPA is proposing guidance identifying the information and data that EPA believes are necessary to accurately reflect residues in or on imported food for certain tolerances with corresponding domestic uses and to make a safety finding for those tolerances. The same food safety standards apply to tolerances proposed for both domestically-produced and imported food; as a result, domestic and foreign growers are treated equally. Interested persons are invited to comment on any aspect of this document, and in particular, on the questions raised in Unit IV.G.

EPA intends to achieve several objectives by describing its historical, current, and proposed process for establishing, modifying and maintaining tolerances with no corresponding domestic registration and for tolerances with domestic registrations:

1. Assure a safe food supply for the general population and sensitive subpopulations in particular, such as infants and children.

2. Target import data requirements to circumstances that are likely to affect the risk assessment.

3. Maintain the Agency's schedule for reassessing tolerances under the Food Quality Protection Act (FQPA).

4. Ensure that tolerance policies remain consistent with international obligations such as the provisions of the World Trade Organization (WTO) Agreements and the North American Free Trade Agreement (NAFTA) chapter on Sanitary and Phytosanitary (SPS) Measures.

5. Promote greater transparency in Agency policies by providing written guidance and soliciting public comment.

A U.S. tolerance (the equivalent of a tolerance is sometimes called a maximum residue limit, or MRL, in other countries) is the maximum residue level of a pesticide permitted in or on food or feed grown in the U.S. and food or feed imported into the U.S. from other countries. Food may not lawfully be sold in, or imported into, the United States if the food contains detectable pesticide residues above the level permitted by a tolerance, or at any level if no tolerance, or exemption from the requirement of a tolerance, has been established. Generally, tolerances are set for raw agricultural commodities and also apply to processed foods derived from the commodities. This is because, in most cases, processing results in residues at or below the levels in the raw commodity; EPA requires processing data to ascertain this. If residues in processed food concentrate to higher levels than in the raw commodity, separate tolerances will need to be established to cover residues in the processed food.

Typically, EPA establishes a tolerance or tolerance exemption for a food commodity at the same time that it registers the use of a pesticide for that commodity in the U.S. Where no U.S. registration exists, interested persons may submit a petition requesting that EPA establish a tolerance or a tolerance exemption for a pesticide residue on a commodity that would allow treated food to be legally imported into the United States. The term ''import tolerance'' is used as a convenience to refer to a tolerance that exists where there is no accompanying U.S. registration. There is no statutory or regulatory distinction between an ''import tolerance'' and any other tolerance issued by EPA.

With this document, EPA provides further clarification of its requirements for import tolerances, and proposes a modification of its approach to registration to permit greater consideration of residues in or on imported food in establishing or maintaining tolerances or tolerance exemptions for food uses registered in the U.S. This document explains the need for foreign residue data for both purposes and a process for the early notification of other countries of the potential for revocation of tolerances following cancellation of a related U.S. registration. This Notice also explains that EPA intends to make use of existing information to the greatest extent appropriate, including data (and associated reviews) that may have been submitted in support of MRLs established by the international Codex Alimentarius Commission, or to regulatory authorities in Canada, Mexico, or other countries.

Also, the U.S. is working with its NAFTA partners in developing import tolerance policies and other related policies that will maintain and enhance food safety while minimizing trade irritants. The publication of U.S. import tolerance guidance is one step in this process.

The remainder of this unit provides information on the legal basis for requiring data for import tolerances and how import tolerances fit in with EPA's general policies on pesticides; a general description of the data requirements for import tolerances; an outline of the types of screening information on residues in or on imported food that EPA is proposing to require; and a brief discussion of EPA's obligations under such international agreements as the WTO and NAFTA SPS Agreements. Unit V. of this Notice provides more specific information on how to apply existing U.S. data requirements to tolerances that do not have corresponding registration for U.S. food uses.

B. Statutory Basis for Guidance

EPA regulates pesticides under two major statutes: the Federal Insecticide, Fungicide, and Rodenticide Act (FIFRA) and the Federal Food, Drug, and Cosmetic Act (FFDCA). FIFRA requires that pesticides be registered (licensed) by EPA before they may be sold or distributed for use in the United States. Section 408 of the FFDCA authorizes EPA to establish, modify, or maintain tolerances or tolerance exemptions for pesticide residues in or on food. Once established, a tolerance or tolerance exemption applies equally to domestically-produced and imported food. Any food with pesticide residues not covered by a tolerance or tolerance exemption (or with residues in excess of the tolerance) may be subject to regulatory action by the U.S. government (including seizure). Pesticide tolerances and exemptions are enforced by individual states and the U.S. Food and Drug Administration (FDA) for most foods, and by the U.S. Department of Agriculture (USDA) for meat, poultry, and some egg products.

EPA has an obligation under section 408 of the FFDCA to establish tolerances for pesticide chemicals at levels that are ''safe.'' EPA also has an obligation to ensure that the tolerances continue to be ''safe'' over time, since new information may alter the Agency's earlier safety finding under the FFDCA.

The Food Quality Protection Act of 1996 (FQPA) made several changes to the U.S. laws affecting pesticides (FIFRA and FFDCA). Many of these changes affect how tolerances are set, notably: Establishing a single, health-based standard (the ''reasonable certainty of no harm'' standard) for all pesticide residues in food; eliminating past inconsistencies in how raw foods and processed foods were dealt with; specifying a broader assessment of potential risks, with special emphasis on potentially sensitive groups such as infants and children; significantly limiting the extent to which benefits can be used in modifying or maintaining existing tolerances; and requiring reassessment of all existing tolerances in accordance with the new safety standard. All tolerances (including import tolerances) must be evaluated according to this new health standard.

In granting new tolerances and reassessing existing tolerances to determine if they meet FQPA standards, EPA must consider available information on aggregate non-occupational exposure from the pesticide (including exposure from food, drinking water, and pesticides used in and around the home), cumulative effects from pesticides with a common mechanism or mode of toxicity; the potential increased susceptibility of infants and children or other sensitive subpopulations; and the potential for estrogenic or other endocrine effects.

Three additional provisions of FFDCA as amended by FQPA are particularly important for this import tolerance guidance: Section 408(b)(4) International Standards; section 408(f) Special Data Requirements; and section 408(l)(2) Revocation of Tolerance or Exemption Following Cancellation of Associated Registrations.

In establishing a tolerance, FFDCA section 408(b)(4) requires EPA to determine if the Codex Alimentarius Commission has established a maximum residue level. If EPA does not adopt the Codex level, then the Agency must publish a notice for public comment explaining the reasons for the deviation.

If EPA needs additional data to support the continuance of a tolerance or exemption, but there are no U.S. registrants from whom the Agency can obtain the data under FIFRA, EPA may require data under section 408(f) of FFDCA, and EPA intends to use that authority to impose data requirements. Section 408(f) of FFDCA allows the Agency to publish a Notice in the **Federal Register** describing the type of data needed and inviting persons willing to submit the necessary data to support the tolerance to identify themselves. Tolerances may be revoked if no person commits to supply the necessary data or if the appropriate data are not submitted in a timely manner.

Finally, section 408(l) requires EPA to revoke a tolerance within 180 days of the cancellation of a FIFRA use if the use was canceled for dietary risk reasons.

Companies and others interested in supporting a tolerance for import purposes should familiarize themselves with the changes in FFDCA brought about by FQPA, since these changes will affect how potential risks are assessed and, ultimately, the Agency's decision on whether to grant a tolerance.

C. Summary of Guidance

To establish or modify a tolerance, or to maintain an existing tolerance, EPA must determine that the proposed or existing tolerance is safe under section 408 of the FFDCA as amended by FQPA. This safety finding is based, among other things, on information about the toxicity of the pesticide, likely residues in or on the food in question, and consumption patterns. For new tolerances with no accompanying U.S. registrations, the Agency will continue to require that tolerance petitioners provide EPA with the information and/or data that EPA needs to make the required safety finding. This usually will include residue data representative of the pesticide's use in other countries that export food to the U.S.

In addition, as domestic uses are canceled during the pesticide reregistration process, or for any other reason (other than dietary risk), EPA will consider requests for modifying or maintaining the corresponding tolerance to allow the continued import of treated food into the U.S. As stated above, EPA is required to make a safety finding and may determine that additional data reflecting foreign use patterns and likely residues in or on imported food are necessary for EPA to conclude that the tolerance is safe. For example, if a tolerance has not been reassessed and the corresponding domestic registration is being or has been canceled, old data may not reflect current use patterns, including uses abroad. To determine what data are necessary, EPA will consider information such as that described in Unit IV.D. Therefore, it is important that the data requirements for import tolerances be clearly stated and that the international community understands the need for these data to ensure the safety of imported food for the American public.

Similarly, in those cases where EPA establishes or maintains a tolerance where there is a corresponding registered U.S. food use, the Agency typically has not estimated the specific

contribution to the diet of residues in or on imported food. This is because EPA assumes that residues in or on imported food will be the same as residues in or on food that is domestically-produced; information such as monitoring data is generally consistent with that assumption. However, in some instances this assumption may under- or overestimate residues in or on imported food, and, as such, may under- or overestimate the overall risks from consumption of the imported food. Therefore, the Agency expects to consider additional data and/or information about pesticide use in other countries and residues in or on imported food. Such information may indicate the need to require additional data and/or information when necessary to support the establishment or reassessment of tolerances with corresponding domestic registrations (i.e., to make the required safety finding) such as information on foreign use patterns and residues in or on imported food. Such a requirement for additional information would apply in a limited number of cases in which imported commodities comprise a high percentage of U.S. consumption, domestic residue data are not likely to be representative of growing conditions in other countries, and U.S. consumers would likely be exposed to significant residues in imported foods.

Accordingly, the Agency is issuing current guidance for establishing import tolerances and maintaining or modifying tolerances where the domestic use has been canceled, and soliciting comments on further guidance for determining when data on imported foods are necessary to support establishment of tolerances for selected domestic registrations. Generally, EPA intends to use the same kinds of information and general concepts to determine whether additional data reflecting residues in or on imported food are necessary to modify or maintain a tolerance where the use has been canceled and to establish, modify, or maintain a tolerance with a corresponding U.S. registered use.

1. *Current guidance for establishing, modifying, or maintaining import tolerances*—a. *Establishing new tolerances with no accompanying U.S. registration*. EPA will continue to require toxicology data and data representative of residues in or on imported foods in making the required safety findings. EPA generally requires the same toxicology data and residue data as are needed for U.S. food uses, except that the data requirements covering residues in or on imported food are geared to use conditions in the exporting countries. In the past, these data have been required on a case-by-case basis. Unit V. of this Notice provides more detailed written guidance on the data requirements to establish a tolerance for import purposes.

b. *Modifying or maintaining tolerances for imported food following cancellation of U.S. uses*. Registered pesticide uses may be canceled for a variety of reasons including internal business reasons, dietary risk concerns, or non-dietary risk concerns. In many cases, a tolerance is no longer needed after a registered use in this country is canceled, and EPA routinely proposes to revoke such tolerances. However, use in other countries may continue and, unless a use was canceled due to dietary risk concerns, EPA will consider requests (normally by petition) to modify or maintain a tolerance as an ''import tolerance.'' EPA plans to use a variety of means to provide an opportunity for interested parties to support the modification or maintenance of a tolerance in these circumstances. In cases where a cancellation of a pesticide is for dietary risk reasons, FFDCA section 408(1) requires revocation of the tolerances within 180 days of the cancellation.

When a pesticide is canceled based on non-dietary risk concerns, such as adverse effects on non-target species, the corresponding tolerance may be maintained provided that there is a need for the tolerance because the pesticide is used outside of the U.S. on commodities intended for the U.S. market and a proponent of the tolerance supplies sufficient data or information to demonstrate that a tolerance meets the food safety requirements of FFDCA. EPA's tolerance setting authority is based on food safety considerations. The Agency has no authority to regulate pesticide use in other countries. At the same time, however, EPA promotes public health and environmental protection worldwide by providing information designed to encourage safer, well-informed pest control decisions on an international level, consistent with the Agency's mandates under FIFRA. This includes Agency actions based on non-dietary as well as dietary risks. Whenever EPA takes significant cancellation actions based on non-dietary risks, EPA will notify other countries and share information with other regulatory authorities for their use in deciding whether conditions in their countries warrant continued use of the pesticide. Where appropriate, EPA will also propose to include pesticides canceled, whether or not for non-dietary concerns in the international system of information exchange known as the ''prior informed consent'' system.

When a registrant requests that a registered use be deleted voluntarily, the Agency will propose to cancel that use in a **Federal Register** Notice in accordance with section 6(f) of FIFRA. Following the cancellation of a use, EPA will typically propose to revoke the tolerance. To provide interested parties an early notification of the potential revocation of the tolerance, the section 6(f) Notice will inform the public that once the use is canceled, the Agency may propose to revoke the tolerance unless there is a request to modify or maintain it as an import tolerance. In addition, the interested party must commit to supply the information necessary for the Agency to make a safety finding. The Notice will state the Agency's willingness to consider requests to modify or maintain a tolerance following the cancellation of the accompanying registration and indicate the process for doing so. Interested parties may notify EPA of their interest in supporting maintenance or modification of a tolerance to cover residues in or on imported food in comments on the Notice. EPA will also provide the public with information on the EPA web site (www.epa.gov/pesticides) about the potential loss of the related tolerance and about how to maintain a tolerance as an import tolerance if the corresponding use is canceled. These notices will also be provided to other countries through the WTO notification process.

If EPA receives a request to modify or maintain a tolerance in response to a section 6(f) Notice, the interested party may identify or provide (consistent with relevant provisions of FIFRA) existing domestic or foreign data and the Agency will determine if the data are sufficient. EPA will consider the kind of information specified in Unit IV.D. to determine if additional data and/or information are needed (and data requirements must be satisfied) to support continuation of the tolerance. If so, the Agency may issue a Notice under section 408(f) of FFDCA informing the public of the data requirements and stating the time period for submitting the required data. Persons supporting the maintenance or modification of tolerances to cover residues in or on imported food have the burden of demonstrating the relevance of any existing domestic data to foreign growing conditions.

If EPA does not receive any indication of support for an import tolerance following the cancellation of the registered food use, the Agency will publish a **Federal Register** Notice that

proposes to revoke the tolerance. The Notice will again give interested parties the opportunity to come forward to support the maintenance of the tolerance. To avoid the issuance of the final tolerance revocation, interested parties must demonstrate a need to retain the tolerance and commit to support the tolerance. Retaining the tolerance may likely require submission of data so that EPA can make safety findings under FFDCA. EPA's data requirements for import tolerances are further described in Unit V.

2. *Further guidance under development regarding U.S. registration with an import component.* The Agency expects to require information on residues in or on imported food in a limited number of circumstances when registering new U.S. uses and when reassessing tolerances as required by FQPA. In the past, EPA has not expressly considered the unique contribution of residues in or on imported food when establishing (or reassessing) tolerances with accompanying U.S. registrations. Currently, EPA assumes that the residues in imported commodities will be the same as in domestically-produced commodities. Additional information will be required when EPA's assumption that residues in or on imported foods will be the same as residues in or on domestic foods is not expected to be correct and/or additional data to better reflect residues in or on imports are necessary to support the safety finding. Because, in this instance, EPA's assumption may under- or overestimate risks from imported food, and existing monitoring programs may not provide sufficient information in all cases to support the assumption and safety finding, the Agency is developing criteria to help determine the circumstances in which residue data based on pesticide use on crops destined for import into the U.S. should be required. When imported foods may contribute significantly to dietary exposure to the pesticides, those interested in establishing or supporting continuation of a tolerance with a U.S. registered food use must provide basic screening information about potential residues in imported foods, as discussed below, so that the Agency can determine if additional data are needed.

It is important to emphasize that the Agency expects that additional data will be needed in very limited cases where a high percentage of the commodity is imported potentially resulting in substantial dietary exposure. EPA is seeking comment on the adequacy and appropriateness of requiring this information, as well as on the specific questions posed on this issue later in this document. While seeking comment on this document and developing more formal guidance, the Agency reserves the right to require data based on pesticide use in other countries on a case-by-case basis, e.g., when a high percentage of the commodity is imported, and, thus, such information is clearly necessary to make the required safety findings under FFDCA.

D. Screening Information

The following types of screening information will be considered in establishing or reassessing a tolerance or tolerance exemption to help the Agency decide if additional information or data are needed on imported foods, regardless of whether the data are supporting import tolerance or a domestic registration with a significant import component:

- What international tolerances or MRLs exist?
- Which countries export the commodity to the U.S.?
- Major seasonal variations in imports of the commodity.
- Percent of U.S. consumption which is imported.
- Percent of crop treated in the exporting countries.
- Significance of the food in the U.S. diet (see Table 10 in Unit VII.).
- Effect of processing on the residues.
- Available information on levels of residues found in samples of imported food (based on FDA, USDA, or other monitoring data).
- Other information that would help the Agency determine if residues in or on imported food are likely to contribute significantly to dietary exposure or risk in the U.S. or to differ significantly from residues in or on domestically-produced foods.

Following are two examples of how the Agency may use the above information in determining the need for further data:

Example 1. A petitioner seeks a U.S. registration and tolerance for a new pesticide use on cranberries. Less than 1% of cranberries consumed in the U.S. are imported. Almost all imports are from Canada, where growing conditions (e.g., use patterns, weather conditions, soil type) are similar to those in the U.S. Cranberries account for an extremely low percentage of the U.S. diet. In this case, EPA would probably not require submission of foreign residue data because dietary exposure to residues in imported cranberries is very low and EPA determines that U.S. field trials would be representative of growing conditions in Canada.

Example 2. A petitioner seeks to maintain a tolerance for residues of a pesticide in bananas following the cancellation of the banana use in the U.S. The vast majority of bananas consumed in the U.S. are imported. Bananas are imported from Central and South America, and cultural practices for bananas grown in the U.S. differ from those in Latin America. Existing residue data consist of five U.S. field trials in Hawaii and Puerto Rico. Bananas represent a relatively high percentage of the U.S. diet, especially for children. To assess the safety of the tolerance, EPA would likely require submission of additional residue data based on the pesticide's use in major banana exporting countries for the following reasons: Most of what is consumed in the U.S. is imported and EPA has no data on such foreign uses; cultural practices in other countries appear to differ from those in the U.S.; and bananas represent a relatively high percentage of the diet of a potentially sensitive subpopulation (children). The tolerance petitioner would not necessarily have to conduct new trials; however, since there may be existing, reliable residue data that supported a Codex submission or an MRL approved by another regulatory body.

These examples are only for illustrative purposes to suggest how the Agency might use the screening information in deciding whether to require additional residue data. Other factors that would likely affect the Agency's decision include the toxicity of the chemical, available information on conditions of pesticide use in exporting countries, and available monitoring data.

E. Data Requirements

Import tolerances generally require the same types of data as are needed for tolerances with U.S. registrations, including toxicology data, residue chemistry data, and data representative of actual growing conditions. EPA needs these data to assess the potential dietary risk and to make the required safety finding. EPA does not require worker exposure and environmental fate and effects data to establish import tolerances since these data are not needed to assess dietary risk, although they would be required if the pesticide were to be registered for use in the U.S. The data requirements described in Unit V. interpret 40 CFR part 158 for purposes of characterizing residues in or on imports, and are intended to apply to all new tolerance petitions where there is no U.S. registration and to requests to modify or maintain a tolerance for imports where the

corresponding U.S. use has been canceled.

The data requirements described in this Notice are the existing EPA field trial guidance for U.S. registrations adapted to growing conditions in other countries. In the past, EPA did not have written guidance for the number and location of field trials to support tolerances for residues in or on food imported from other countries. Rather, the Agency provided case-by-case advice on adapting the data requirements to import situations. Unit V. provides written guidance on how to determine the number and location of field trials for new tolerances on imported commodities.

F. Consistency with International Obligations

1. *Codex*. The Codex Alimentarius Commission of the Joint Food and Agriculture Organization/World Health Organization (FAO/WHO) Food Standards Program establishes international food standards, including maximum pesticide residue limits, to protect public health and promote international trade. It is EPA's policy to harmonize its tolerances with the levels established by Codex provided that the Agency has sufficient information to make a determination that the Codex Maximum Residue Limits (MRLs) will be protective of the health of the U.S. public and meet FFDCA standards. FQPA requires EPA to publish a notice for public comment whenever the Agency establishes a tolerance that differs from an established Codex MRL. EPA may set a tolerance that differs from the Codex MRL if EPA explains the reason for the difference. For example, EPA may determine that the Codex MRL does not meet FFDCA standards or is inadequate in light of pesticide use practices in the U.S.

2. *International trade agreements*. The U.S. is a party to both the North American Free Trade Agreement (NAFTA) and the World Trade Organization (WTO) Agreements. Both agreements contain provisions applicable to Sanitary and Phytosanitary (SPS) Measures that include food safety measures such as tolerances. Under these agreements, individual countries have the right to establish levels of protection for human, animal, or plant life or health that they deem appropriate and to implement measures that will achieve these levels of protection. Measures are to be based on available international standards, including Codex MRLs, but may be more stringent than international standards if there is a scientific justification or to achieve a greater level of protection. Measures are to be based on scientific principles, not be maintained without sufficient scientific evidence, and be based on an assessment, as appropriate to the circumstances, of the risks; may not arbitrarily or unjustifiably discriminate between domestic and imported goods or goods from different importers; and are to be established through an open, transparent process. The NAFTA further states explicitly that efforts toward greater harmonization and equivalence in regulatory standards are to be undertaken ''without reducing the level of protection of human, animal, or plant life or health.''

As stated in this Notice, EPA's policy is to harmonize its tolerances with Codex MRLs to the extent possible, provided that the MRLs achieve the level of protection required under FFDCA. Publication of this Notice will enhance the transparency of EPA's requirements governing pesticide residues in imported foods by providing better guidance on the type of data needed to support a tolerance. The tolerance policies outlined in this Notice are nondiscriminatory and designed to ensure that both domestically-produced and imported foods meet the food safety standards (level of protection) established by the FFDCA. The same food safety standards apply to domestically-produced and imported foods.

3. *NAFTA activities*. As part of NAFTA, a North American Pesticide Initiative was created to improve cooperation and sharing of data reviews for pesticides among the three countries. The U.S. is participating with its NAFTA partners (Canada and Mexico) in harmonizing data requirements and policies to the extent possible. Canada and the U.S. have made substantial progress in harmonizing their data requirements and have established zone maps to permit pesticide residue data from one country to be used by the other for estimating MRLs and tolerances. A similar effort is underway to develop zone maps that will permit the use of data from similar growing regions in Mexico and the U.S. In addition, this U.S. import tolerance guidance is intended to form the basis for a NAFTA guidance on import tolerances. EPA has been working with its NAFTA partners in developing this guidance.

G. Request for Comments

The Agency is interested in comments on this Notice and, in particular, on its proposed guidance for requiring data and information on potential residues in or on imported foods when there is a corresponding U.S. registration. EPA is specifically soliciting comments on the following questions:

1. Under what circumstances should EPA require data reflecting growing conditions in other countries when a pesticide also has U.S. registration for the same food use?

2. Do the data requirements outlined in this Notice provide a sufficient basis for making the food safety determination required by the FFDCA?

3. If a commenter believes that data reflecting growing conditions in other countries should not be required when a pesticide is registered for the same use in the U.S., how should the Agency account for potential exposure to residues in or on imported foods in conducting its dietary risk assessments?

4. Should EPA be concerned with potential shifts in the sources of imported foods and changes in pesticide use practices in exporting countries over time? If so, how frequently should data needs be reassessed? (After an initial tolerance is granted, the crop in question could be grown in other countries that have different application methods and climate, possibly resulting in different residues in or on imported food.)

5. Pesticides with U.S. registrations require periodic review under U.S. laws to ensure that the data supporting the registration (and associated tolerances) continue to meet up-to-date scientific standards. How should EPA ensure that import tolerances, which have no corresponding U.S. registrations, are similarly reviewed and updated? (The Agency notes that FFDCA requires a review of tolerances after five years whenever anticipated residue data are used in risk assessment.)

6. What criteria should be used in deciding if further data are needed to better capture the imported food contribution to dietary risk when there is a tolerance with a corresponding domestic registration?

V. Import Tolerance Data Requirements

The data requirements in this Unit apply to the following two scenarios discussed in Unit IV:

1. Establishing new tolerances with no accompanying U.S. registration.

2. Modifying or maintaining tolerances for imported food following cancellation of U.S. uses.

This part clarifies how existing U.S. food use pesticide data requirements for product chemistry, residue chemistry, and toxicology studies apply to petitions for tolerances to cover residues in or on imported commodities (scenario 1). These data requirements also serve as target data requirements for scenario 2.

There are no additional types of studies needed for import tolerances, compared to tolerances that do have corresponding domestic registrations. In general, fewer studies are required than for tolerances associated with U.S. registrations because only those studies specifically associated with a tolerance petition are required. The guideline requirement that requires the most clarification for import tolerances is OPPTS Guideline 860.1500, Field Trials. These are the core studies from which most tolerance values are estimated.

If a registrant has an existing tolerance and registered U.S. use, but intends to withdraw the registered use and maintain the tolerance for import purposes, the Agency may need additional residue data to better determine the dietary exposure of U.S. consumers to the pesticide. In such cases, the registrant or other proponent of the tolerance is advised to consult with the Agency to determine what studies are required to support the tolerance.

The import tolerance petitioner may not need to conduct new studies to fulfill the data requirements. Interested parties may support a new import tolerance, or support maintenance or modification of an existing tolerance, with studies developed for a registration in another country, for a Codex MRL, and/or in support of the previous U.S. registration and tolerance, provided that they are able to demonstrate the applicability of the studies to the requirements in this Notice. The petitioner or other interested parties may consult with the Agency before submitting the existing studies. All studies must be formatted in accordance with PR Notice 86-5, and, as such, should contain a statement describing the applicability of the U.S. (40 CFR part 160) or Organization for Economic Cooperation and Development (OECD) requirements for Good Laboratory Practices. The Agency strongly recommends that petitioners attach a copy of the study evaluation by the registering country or by Codex to the study report as an appendix.

An earlier version of the import tolerances data requirements included in this unit was presented to the FIFRA Science Advisory Panel (SAP) in June 1997. The SAP was supportive of the approach for determining number and location of field trials and encouraged international harmonization to the extent possible. In addition to the SAP, comments have been received from Canada's Pest Management Regulatory Agency (PMRA) and the American Crop Protection Association (ACPA) and taken into consideration in this Notice.

A. Description of Format and Data Requirements for an Import Tolerance Petition

Tolerance petition requirements are summarized in 40 CFR 180.7(b). Each petition must contain seven parts, labeled A through G. The requirements for each section are listed below with a description of the specific information needed to establish an import tolerance. This information is the same as or similar to information needed to support an existing tolerance where the corresponding U.S. use has been canceled.

1. *Section A—The name, chemical identity, and composition of the pesticide chemical.* Petitioners usually reference product chemistry studies that were submitted in support of a product registration to fulfill these requirements. Table 1 lists guideline numbers for product chemistry studies along with the information needed specifically for import tolerances. The petitioner must disclose the inert ingredients in the formulation. Residue and safety data for List 1 inert ingredients may be required if List 1 inerts are present in the formulation so that a dietary risk assessment for the inert can be done by the Agency. (A reference for the inert classification system may be found at 54 FR 48314, November 22, 1989)

2. *Section B—The amount, frequency, and time of application of the pesticide chemical.* For all countries in which a pesticide chemical is marketed and may result in residues in food exported to the U.S., the petitioner must submit a description of the use of the pesticide chemical. It is preferable to submit copies of labels translated to English. The information must include, but is not limited to, the maximum single application rate, the maximum annual application rate, application timing (as it relates to plant growth stage), re-treatment interval, application tank-mix preparation, volume of spray mix per unit area, application equipment, and the pre-harvest interval (PHI). The application rates should be expressed in units of pounds active ingredient per acre (or kilograms per hectare). If the pesticide chemical is applied directly to livestock, then the use information should include a description of the application method (dip, spray, ear tag, etc.), amount of active ingredient applied per unit body weight, re-treatment intervals, maximum application rate per year, and the pre-slaughter interval.

3. *Section C—Safety data.* Toxicology data required to support an import tolerance are largely the same as those required to support a domestic tolerance with the notable exceptions of most acute toxicity studies and studies reflecting administration via the dermal or inhalation routes. In the case of pesticides having at least one tolerance associated with a U.S. registration, this data subset would already have been submitted to the Agency. Toxicology data requirement guidelines are given in Table 2 in Unit VI.

4. *Section D—The results of test on the amount of residue remaining, including a description of the analytical method used.* Studies conducted under the OPPTS Guideline 860 series (formerly 171-4) are listed in this section. These include metabolism studies, analytical methods used, information relating to the storage stability of the parent compound and metabolites of concern on the appropriate commodity, and magnitude of residue studies. Specific requirements are further described below in the section on residue chemistry studies.

5. *Section E—Practicable methods for removing residue.* This section is primarily of concern if the proposed tolerance results in an unacceptable risk, when assuming that residues will be ingested at the proposed tolerance level. The petitioner may conduct studies describing reduction of residues through typical practices, including washing, peeling, cooking, etc.

6. *Section F—Proposed tolerance for the pesticide chemical if tolerances are proposed.* The petitioner must propose a tolerance based on the maximum residues found in the magnitude of residue studies. The Agency may choose to adopt the Codex MRL, if one has been established, as described in the following section on residue chemistry studies.

7. *Section G—Reasonable grounds in support of the petition.* The petitioner should present a rationale describing how the residue data support the proposed tolerance. A detailed discussion of the information that should be presented may be found in OPPTS Guideline 860.1560.

B. Toxicology Data Requirements

Table 2 in Unit VI. lists the full complement of toxicology data required to support a tolerance as listed at 40 CFR part 158. Whether or not a given study is required to support an import tolerance is noted as are several explanatory footnotes. The petitioner is urged to refer to 40 CFR part 158 for the test substance(s) and conditions under which each study is required. Detailed guidance on the conduct of the

individual studies may be found in the references cited at the end of this Unit. In addition to the required studies, the Agency welcomes the submission of studies not required to support an import tolerance if they have been conducted to satisfy the registration/tolerance-setting requirements of one or more countries outside of the U.S. The Agency also reserves the right to require any study, including special studies, if deemed necessary to assess the human hazard, dietary risk, mode of toxicity, or other aspect of the pesticide in question.

C. Residue Chemistry Data Requirements

Table 3 in Unit VI. lists the Residue Chemistry studies required to support tolerances as outlined in 40 CFR part 158. The data required to support an import tolerance are essentially the same as for a tolerance associated with a U.S. registration, but fewer studies may be required under certain conditions. More detailed guidance for each type of study may be obtained from the list of references at the end of this Unit. Following is a description of the differences in data requirements (compared to requirements for a tolerance associated with a domestic use) for field trials, processing studies, and livestock studies.

1. *Field Trials (OPPTS Guideline 860.1500)*. Field trials are conducted to determine the maximum residue that may be expected in or on a raw agricultural commodity as a result of the legal use of the pesticide. The trials must reflect label directions that would be expected to result in the maximum residue levels, e.g., the maximum label rates, maximum number of applications, minimum re-treatment interval, and minimum PHI.

The Agency has prepared two tables (Tables 4 and 5 in Unit VI.), that can be used to determine the number of field trials that should be conducted for an import tolerance. The number of field trials recommended was derived from the number required for a tolerance associated with a U.S. registration, and also takes into consideration the consumption of the commodity as a percentage of the U.S. diet and the relative amount imported into the U.S. (percent imported averaged over 5 years). Detailed instructions on determining the number and location of field trials and examples are provided in Unit VII. of this document. Table 10 in Unit VII. provides information on relative significance of each food in the U.S. diet.

The U.S. and Canada use zone maps to determine where field trials should be conducted for tolerances associated with a domestic registration. These maps divide North America into regions where growing conditions are similar. Field trials conducted within the same zone are considered interchangeable. In the absence of zone maps for other countries developed using similar principles, the Agency requests data on a country-by-country basis. Trials should be conducted in countries in relative proportion to the amount each country exports into the United States. Only those countries in which the pesticide is marketed or proposed to be marketed need to be represented. Trials will generally need to be conducted in all countries that export at least 5% of the total amount of a specific commodity imported into the U.S. The petitioner should seek Agency approval if substitution of data from one country to another is desired. All major growing areas within a country should be represented, as is required for U.S. registrations in OPPTS Guideline 860.1500. At least two individually composited samples must be taken from each test plot and analyzed.

All major formulation classes should be represented. Petitioners are referred to the section on formulations in the residue chemistry OPPTS Test Guideline, 860.1500(e)(2)(x). A full set of trials must be conducted for each major class. For later season uses, it will likely be necessary to conduct trials on the different formulations within a class. If a petitioner has a chemical with a 2–day PHI that is formulated as an emulsifiable concentrate and a wettable powder, a full set of trials would be required for both formulations, unless side-by-side plots at a few sites show comparable residues from such products. In the latter case, some reduction of the total number of trials may be warranted. Petitioners are advised to consult the guidelines or Agency staff if a reduced number of trials is intended.

For crops requiring 8 or more trials, the number of trials may be reduced up to 25% if metabolism studies indicate that residues are likely to be below the limit of quantitation. If some trials show quantifiable residues, then the full number of trials must be conducted. The limit of quantitation should be sufficiently low from an analytical chemistry standpoint and for risk assessment purposes. The 25% reduction in the number of field trials may not be applied to representative commodities used to support crop group tolerances. For additional information, the petitioner is advised to consult OPPTS Guideline 860.1500(e)(2)(viii).

Data generated in the United States or countries other than where the petitioner has existing or proposed uses may be substituted for up to half of the required number of foreign trials, but a minimum of three trials must be from the countries in which the pesticide is marketed. The petitioner should demonstrate that crop cultural practices, climatological conditions, and use patterns are substantially similar between the subject regions and regions represented by the U.S. (or other) data. The burden of proof is on the petitioner.

In the case of tolerances to cover treated commodities imported from Canada or Mexico only, it may be acceptable for more than 50% of the trials to be conducted in the U.S. As mentioned above, as part of the harmonization process under the NAFTA, the crop field trial regions in the U.S. guidelines have been extended into Canada, and efforts are underway to do the same into Mexico. This would allow trials in the U.S. to support registration and tolerances in Canada and Mexico or vice versa. As a result, among these three countries, for certain crops most or all of the field trials could be conducted in a different country than the one in which the pesticide use is registered. For example, if a tolerance is desired to cover the export of cranberries from Canada to the U.S., most of the trials could be conducted in the northern regions of the U.S. even though the pesticide is to be registered in Canada. Similarly, for certain crops being imported from Mexico, many of the trials could be done in the southwestern U.S. In the future, if other countries develop zone maps employing similar concepts, and the regions and cultural practices are demonstrated to be substantially similar to U.S. regions, then the Agency may consider substitution of U.S. data for those countries as well.

Generally, a minimum of three trials are required for any crop. In certain cases, a petitioner may conduct fewer than three trials if there is a low dietary intake of commodity and if the amount imported is relatively small. In such cases, a greater number of samples would be required from the test plot. Petitioners should consult OPPTS Guideline 860.1500 or submit a protocol for review and comment by the Agency.

Table 9 in Unit VII. lists the number of field trials and locations for commodities for which import tolerances are most frequently requested. Petitioners interested in establishing import tolerances for a crop group are advised to consult with the Agency for direction on number and location of trials for each representative commodity within the crop group.

2. *Processing Studies (OPPTS Guideline 860.1520).* Processing studies must be conducted if there is likely to be processing of the commodity once it has been imported into the U.S. or if the processed commodity is imported into the U.S. Table 1 of the residue chemistry testing guidelines (OPPTS Guideline 860.1000) lists the processed commodities for which data are required. The petitioner is advised to consult the Agency if the petitioner believes a processing study is not necessary when it normally would be required. In a processing study, the raw agricultural commodity (RAC) is processed in a manner simulating typical commercial practice. The RAC should have detectable residues so a concentration factor may be calculated. Exaggerated rates and/or reduced PHIs may be necessary to ensure that the RAC to be processed bears quantifiable residues.

3. *Nature of the Residue—Animals (OPPTS Guideline 860.1300).* If the raw agricultural commodity or processed commodity associated with the crop to be treated in the subject petition could be used as an animal feed, oral livestock metabolism and magnitude of residue studies are required. Dermal metabolism studies are required if the pesticide is marketed as a dermal treatment for livestock in countries that export a significant quantity of animal products to the U.S. The purpose of these studies is to determine the identity of the biotransformation products of the pesticide. Ruminant and poultry studies are normally required. EPA will assume that all feed items included in Table 1 of OPPTS Guideline 860.1000 are feed items for import tolerance purposes. Any claims that these items are not significant feed items in the country(s) of concern will be considered only if they are convincingly documented by the petitioner.

Livestock metabolism, magnitude of residue, and/or analytical method studies would not be required under the following conditions: (i) If animal metabolism studies indicate that there is no reasonable expectation of finite residues in the animal commodity; (ii) if it is unlikely the imported plant commodity or its processed products would be significant feed items (in the U.S. or exporting country); or (iii) there are not significant exports of livestock-derived food products or commodities from the countries of interest to the U.S. and the commodity is not a feed item in the U.S.

D. JMPR/Codex Considerations

The Agency requires the submission of complete toxicology studies for import tolerances even if they have previously been submitted to the Joint Meeting on Pesticide Residues (JMPR). The Agency will conduct an independent review of the data. Summaries and/or JMPR reviews are not an acceptable substitute, although they may be submitted as supplemental materials. However, in the future, harmonization of OECD test guidelines and data evaluations may allow the Agency to use toxicology data reviews from other countries for hazard identification and risk assessment.

If a Codex MRL has been established, the Agency may conduct a more limited review of the residue chemistry data under certain conditions. A detailed description of the conditions and an overview of how the Agency may consider Codex MRLs as they relate to the data requirements may be found in Unit VIII. EPA is more likely to accept Codex MRL levels as tolerance levels with limited review if U.S. tolerances for the pesticide are already established on other commodities. Standard data and review requirements would be applied where exposure and/or risk from the pesticide is high.

E. Good Laboratory Practice Considerations

As described in 40 CFR 160.1(a) and 160.3(4) all submissions for pesticide registrations and tolerance petitions should be in accordance with Good Laboratory Practices (GLP). If the study deviates from GLPs, a statement must be included in the study stating any deviations and the effect on the study. Any deviations should be duly noted in the report.

F. Submittal of Samples

Registrants and petitioners are normally required to submit samples of the pesticide technical grade active ingredient (TGAI) under OPPTS Guideline 830.1900 and analytical standards of the parent compound and regulated metabolites under OPPTS Guideline 860.1650. Unless the TGAI is to be registered in the U.S., petitioners for an import tolerance are not required to submit samples of the product because this is a requirement only for the registration of a product. However, the petitioners are still required to submit the analytical standard under OPPTS Guideline 860.1650 because this is a requirement for a pesticide tolerance petition.

G. Conclusion

Data requirements for a pesticide tolerance in the absence of a U.S. registration (i.e., import tolerance) have been outlined in this part. Before conducting any toxicology, product chemistry, or residue chemistry studies, prospective petitioners are strongly urged to consult the OPPTS Guideline series 870, 830, and 860. Petitioners should submit protocols to EPA for review and comment if they have any questions regarding study design and conduct. The Agency will attempt to harmonize U.S. tolerances with international standards to the maximum extent possible, consistent with the food safety standards of the FFDCA, and is continuing to work towards greater harmonization in international fora.

VI. Tables

The following tables are provided as additional information and are referenced in this guidance document.

TABLE 1.—PRODUCT CHEMISTRY DATA REQUIREMENTS FOR IMPORT TOLERANCES

Guideline No.	Study Title	Application to Import Tolerances	Test Substance [1]
830.1550	Product Identity	No—Product Specific Requirement	N/A
830.1600 830.1620 830.1650	Description of Manufacturing Process	Yes	TGAI
830.1670	Discussion on Formation of Impurities	Yes—Agency is especially concerned with impurities of toxicological concern (e.g. dioxins, HCB, nitrosamines)	TGAI
830.1700	Preliminary Analysis	Yes	TGAI

TABLE 1.—PRODUCT CHEMISTRY DATA REQUIREMENTS FOR IMPORT TOLERANCES—Continued

Guideline No.	Study Title	Application to Import Tolerances	Test Substance [1]
830.1750	Certified Limits	No—Product Specific Requirement	N/A
830.1800	Enforcement Analytical Methods	No—Product Specific Requirement	N/A
830.6302	Color	Yes	TGAI
830.6303	Physical State	Yes	TGAI
830.6304	Odor	Yes	TGAI
830.7200	Melting Point	Yes	TGAI
830.7220	Boiling Point	Yes	TGAI
830.7300	Density	Yes	TGAI
830.7840 830.7860	Water Solubility	Yes	TGAI or PAI
830.7950	Vapor Pressure	Yes	TGAI or PAI
830.7370	Dissociation Constant	Yes	TGAI or PAI
830.7550 830.7560 830.7570	Octanol/Water Partition Coefficient	Yes	PAI
830.7000	pH	Yes	TGAI
830.6313	Stability	Yes	TGAI
830.6314	Oxidation/Reduction	No—Product Specific Requirement	N/A
830.6315	Flammability	No—Product Specific Requirement	N/A
830.6316	Explodability	No—Product Specific Requirement	N/A
830.6317	Storage Stability	No—Product Specific Requirement	N/A
830.6319	Miscibility	No—Product Specific Requirement	N/A
830.6320	Corrosion Characteristics	No—Product Specific Requirement	N/A
830.6321	Dielectric Breakdown Voltage	No—Product Specific Requirement	N/A
830.7100	Viscosity	No—Product Specific Requirement	N/A
830.7050	UV/Visible Absorption	No—Product Specific Requirement	N/A

[1] TGAI = technical grade active ingredient; PAI = pure active ingredient

TABLE 2.—TOXICOLOGY DATA REQUIREMENTS FOR IMPORT TOLERANCES

Guideline Reference Number	Study Title	Applicable to Import Tolerance	Footnote Number
870.1100	Acute oral toxicity—rat	Yes	
870.1200	Acute dermal toxicity	No	1, 2
870.1300	Acute inhalation toxicity—rat	No	1, 2
870.2400	Acute eye irritation—rabbit	No	1, 2
870.2500	Acute dermal irritation	No	1, 2
870.2600	Skin sensitization	No	1, 2
870.3100	90-Day Oral Toxicity—rodent	Yes	
870.3150	90-Day Oral Toxicity—non-rodent	Yes	
870.3200	21-Day dermal toxicity	No	2

TABLE 2.—TOXICOLOGY DATA REQUIREMENTS FOR IMPORT TOLERANCES—Continued

Guideline Reference Number	Study Title	Applicable to Import Tolerance	Footnote Number
870.3250	90-Day dermal toxicity	No	2
870.3465	90-Day inhalation—rat	No	2
870.3700	Developmental toxicity study	Yes	
870.3800	Multi-Generation Reproduction	Yes	
870.4100	Chronic Toxicity	Yes	
870.4200	Carcinogenicity study	Yes	
870.4300	Combined chronic toxicity/carcinogenicity	Yes	
870.5100 to 870.5915	Mutagenicity	Yes	3
870.6200	Neurotoxicity screening battery	Yes	
870.7200	Companion animal safety	No	4
870.7485	Metabolism and pharmacokinetics	Yes	
870.7600	Dermal penetration	No	2

[1] Study used largely to determine appropriate hazard statements required on U.S. pesticide product labels.
[2] Study reflects a route of exposure (dermal or inhalation) not expected to be applicable to dietary exposure, the only exposure route assumed to be relevant to U.S. citizens via imported foods/feeds.
[3] An initial battery of the following three tests must be conducted: (1) Ames assay (*S. typhimurium*), (2) Mammalian cells in culture forward gene mutation assay, and (3) *in vivo* cytogenetics assay. Details of the screening protocol may be found in Addendum 4 to the Series 84 guidelines, Document PB91-158394, available from the National Technical Information Service.
[4] Study is applicable only to direct application to domestic animals as opposed to dietary exposure via treated feed.

TABLE 3.—RESIDUE CHEMISTRY DATA REQUIREMENTS FOR IMPORT TOLERANCES

Guideline No.	Study Title	Required for Import Tolerance [1]
860.1300	Nature of the Residue—Plants	R
860.1300	Nature of the Residue—Animals	CR [2]
860.1340	Residue Analytical Methods—Plants and Animals	R
860.1360	Multiresidue Methods	R
860.1380	Storage Stability	R
860.1480	Magnitude of Residue—Meat, Milk, Poultry, and Eggs	CR [3]
860.1500	Crop Field Trials	R
860.1520	Processing Studies	CR [4]
860.1850	Confined Rotational Crop	NR
860.1900	Field Rotational Crop	NR

[1] R = Required; CR = Conditionally Required; NR = Not Required.
[2] Required if subject crop is an animal feed item, or if the pesticide will be applied directly to livestock exported to the U.S.
[3] May not be required if crop is not an animal feed item, or if livestock metabolism studies indicate no potential for finite residues in edible commodities. Refer to text of this document for additional information.
[4] May not be required if crop is not likely to be processed after export to the U.S., or if processed commodity is not shipped to the U.S. Refer to text of this document for additional information.

TABLE 4.—NUMBER OF FIELD TRIALS REQUIRED FOR AN IMPORT TOLERANCE (LESS THAN 75% OF CROP AVAILABLE FOR CONSUMPTION IMPORTED INTO U.S.) [1]

Required No. of Field Trials for a U.S. Registration	Percentage of Commodity Imported into U.S. (Weight Basis)		
	0–10%	10–35%	35–75%
20	5	16	20
16 (15) [2]	5	12	16

TABLE 4.—NUMBER OF FIELD TRIALS REQUIRED FOR AN IMPORT TOLERANCE (LESS THAN 75% OF CROP AVAILABLE FOR CONSUMPTION IMPORTED INTO U.S.) [1]—Continued

Required No. of Field Trials for a U.S. Registration	Percentage of Commodity Imported into U.S. (Weight Basis)		
	0–10%	10–35%	35–75%
12	3	8	12
8 (9) [2]	3	5	8
5 (6) [2]	3 [3]	3	5
3	2 [3]	3 [3]	3

[1] The number of trials determined using this table may be reduced by 25% for crops needing 8 or more trials if metabolism studies and all the trials show residues less than the limit of quantitation of the analytical method. Crops being used as representative commodities to obtain crop group tolerances may not be reduced by an additional 25% even if metabolism studies and all the trials show residues of less than the limit of quantitation.

[2] The numbers in parentheses refer to the number of trials required for representative crops being used toward a crop group tolerance. As described in OPPTS Guideline 860.1500, the number of field trials required for representative commodities that are being used to support a crop group tolerance is 25% less than the number required to support a tolerance of a single commodity, provided greater than 8 trials are required for the tolerance.

[3] Fewer than three trials may be conducted if the dietary consumption is very low and a relatively small amount of the commodity is imported into the U.S. Four independent samples must be collected from each test plot if less than three trials are conducted. Petitioners should either consult OPPTS Guideline 860.1500 or contact the Agency before proceeding if they believe that fewer trials are warranted.

TABLE 5.—NUMBER OF FIELD TRIALS REQUIRED FOR AN IMPORT TOLERANCE (GREATER THAN 75% OF CROP AVAILABLE FOR CONSUMPTION IMPORTED INTO U.S.) [1]

Maximum Percent of U.S. Diet [2]	No. of Trials Required
0—0.05	3 [3]
0.05—0.2	8
0.2—1.0	12
>1.0	16

[1] The number of trials determined using this table may be reduced by 25% for crops needing 8 or more trials if metabolism studies and all the trials show residues less than the limit of quantitation of the analytical method and the crops are not being used as representative commodities to obtain crop group tolerances.

[2] Highest percentage in the U.S. diet for any of the following subgroups: general population, children ages 1 to 6, and infants. Information on percentages in the diet may be found in Table 10 of this document.

[3] Fewer than three trials may be conducted if the dietary consumption is very low and a relatively small amount of the commodity is imported into the U.S. Four independent samples must be collected from each test plot if less than three trials are conducted. Petitioners should either consult OPPTS Guideline 860.1500 or contact the Agency before proceeding if they believe that fewer trials are warranted.

VII. Instructions for Determining Number and Location of Field Trials

Following is a step-by-step guide to calculating the minimum number of field trials that must be conducted using Tables 4 and 5 in Unit VI. and Table 10 in this unit.

1. Average the amount of the crop imported into the U.S. for the last 5 years (on a weight basis) from the countries in which the pesticide is marketed. Averaging over the previous 5 years allows for seasonal variability. Information on agricultural imports may be obtained from the U.S. Dept. of Agriculture, the U.S. Dept. of Commerce, and various private sources. All forms of the commodity that are imported (in significant amounts) must be taken into consideration including (but not limited to) juice, juice concentrate, wine, and fresh produce. The source of the import information should be reported.

2. Using the value determined in step 1, calculate the percent of the crop imported into the U.S. relative to the total amount available for consumption in the U.S. If less than 75% of the commodity available for consumption in the U.S. is imported, proceed to step 3. If greater than 75% of the commodity available for consumption in the U.S. is imported, proceed to step 4.

3. Refer to Table 4 in Unit VI. and Table 10 in this unit. Determine the number of field trials required for a U.S. registration for the commodity of interest from Table 10. Using that value and the percentage imported into the U.S., determine the minimum number of field trials required for an import tolerance using Table 4. Go to Step 5.

4. Refer to Table 5 in Unit VI. and Table 10 in this unit. for commodities for which the U.S. imports greater than 75% available for U.S. consumption. The maximum percentage in the diet for any commodity may be found in Table 10. Determine the minimum number of field trials from Table 5 in Unit VI. using the percentage in diet value. Go to Step 5.

5. Determine the countries in which the field trials should be conducted. All countries (in which the pesticide is marketed or intended to be marketed) must be represented if the amount that they export to the U.S. represents 5% or more of U.S. imports of the subject crop. A greater number of total trials and trials per country than that determined in steps 3 and 4 may be required to ensure that all relevant countries and the major growing regions within the individual countries are represented.

Note 1: The number determined in steps 3 and 4 is only the minimum number required. Additional trials may be required to ensure all major formulation classes are represented.

Note 2: If the petitioner does not market or does not intend to market the subject pesticide in one of the top two or three countries that export the subject crop to the U.S., then the total percent imported should not include the countries in which the pesticide is not marketed or intended to be marketed.

Examples of Calculating Number of Field Trials

Several examples are provided below illustrating different considerations when calculating the numbers of field trials. These are for illustrative purposes only. Before submitting data or conducting field trials, petitioners should consult with the Agency.

i. The ABC Chemical Company markets a granular nematicide for use on bananas. This pesticide is marketed in major banana producing countries. ABC Chemical Company would like the U.S. to establish a tolerance for their chemical. No Codex MRL has been set.

a. Approximately 99.8% of all bananas available in the U.S. are imported. The highest consumption level for any population sub-group is 0.96% of the diet for infants. Referring to Table 5 in Unit VI., a minimum of 12 trials would be required.

b. Table 6 below lists the countries and amounts of bananas imported into the U.S. To ensure that all countries that account for greater than 5% of the amount imported are represented, and that the countries with the most production are most heavily represented, 12 trials will have to be conducted (and 24 treated samples analyzed) distributed among exporting companies as listed below. Both bagged and unbagged samples need to be analyzed for bananas. Petitioners have the option of analyzing one bagged sample and one unbagged sample from each site.

Costa Rica—3 trials
Ecuador—3 trials
Honduras—2 trials
Guatemala—1 trial
Colombia—2 trials
Mexico 1—trial

TABLE 6.—BANANAS IMPORTED TO THE UNITED STATES (1991–1995 AVERAGE)

Trading Country	Import Quantity (thousand lbs)	Import Quantity (%)
Ecuador	2,076,329	25.55
Costa Rica	1,994,840	24.55
Colombia	1,312,890	16.16
Honduras	1,032,646	12.71
Guatemala	866,371	10.66
Mexico	559,385	6.88
Panama	191,409	2.36
Venezuela	11,416	0.14
Other Countries	81,366	1.00
Total	8,126,652	100.01

ii. The XYZ Pesticide company intends to register a new insecticide for oranges in most countries, but is not pursuing a U.S. use.

a. Approximately 21% of all oranges available in the U.S. (as juice or fresh fruit) over the last 5 years were imported. Referring to Table 10 in this unit, 16 field trials are required for a U.S registration. Using Table 4, oranges fall in the range of 10-35% imported; therefore a minimum of 12 trials (24 samples) must be conducted.

b. The countries that export fresh fruit and juice to the U.S. are listed in Table 7 along with the amount imported. Considering only the countries in which the pesticide is marketed and represent greater than 5% of the U.S. imports, nine trials should be done in Brazil, and three should be done in Mexico.

iii. The registrant also intends to register another insecticide on oranges in Mexico only, but does not intend to market it elsewhere.

(1) Approximately 3% of all oranges available in the U.S. (as juice or fresh fruit) over the last 5 years were imported from Mexico. Referring to Table 10 below, 16 field trials are required for a U.S registration. Using Table 4 in Unit VI, oranges fall in the range of 0-10% imported, Therefore a minimum of 5 trials (10 samples) must be conducted. All 5 trials would be conducted in Mexico.

TABLE 7.—QUANTITY OF ORANGES AND ORANGE JUICE IMPORTED INTO U.S.

Trading Country	Orange Juice, (Thousand liters)	Weight Orange Juice (Thousand lb) [1]	Weight Fresh Market Oranges (Thousand lb)	Total Weight Imported (Thousand lb)	Percent Imported Total
Brazil	1,042,756	2,294,063	(see footnote 2)	2,294,061	80.73
Mexico	140,403	308,887	29,938	338,825	11.92
Belize	29,784	65,525	—	65,525	2.31
Costa Rica	12,891	28,360	—	28,360	1.00
Honduras	12,440	27,368	—	27,368	0.96
Other (<1% from each country)	9,769	21,492	7,050	28,542	1.00
Spain	(see footnote 3)	—	26,332	26,325	0.93
Morocco	—	0	12,841	12,841	0.45
Australia	—	0	9,691	9,691	0.34

TABLE 7.—QUANTITY OF ORANGES AND ORANGE JUICE IMPORTED INTO U.S.—Continued

Trading Country	Orange Juice, (Thousand liters)	Weight Orange Juice (Thousand lb) [1]	Weight Fresh Market Oranges (Thousand lb)	Total Weight Imported (Thousand lb)	Percent Imported Total
Dominican Republic	—	0	6,873	6,873	0.24
Israel	—	0	3,312	3,312	0.12
Total	1,248,040	2,745,689	96,035	2,841,723	100.00

[1] Assuming each liter of orange juice weighs 2.2 lbs.
[2] Fresh market oranges imported from this country represent less than 1% of the total orange imports and are therefore included in the ''other'' category.
[3] Orange juice imported from this country represents less than 1% of the total orange juice imports and is therefore included in the ''other'' category.

iv. MRE Pesticides has petitioned the Agency for an import tolerance on cherries for an insecticide used to kill an insect found only in warmer climates. They have proposed conducting only three trials using only the WP formulation, but an emulsifiable concentrate is registered as well.

a. Approximately 2.3% of all cherries available for U.S. consumption over the last 5 years have been imported. However, since the pesticide will not be marketed in Canada, the percent imported into the U.S. drops to 2%. Eight trials are required for a tolerance with a U.S. registration, according to Table 10 in Unit VII. Referring to Table 4 in Unit VI., a minimum of 3 trials are required for an import tolerance. However since both formulations should be tested, a minimum of 6 trials (12 treated samples) are required, 3 with each formulation.

b. Table 8 below shows the amount imported into the U.S. Normally trials would be required for both Chile and Canada, but the pest controlled by the product is only found in warmer climates. Therefore all six trials should be conducted in Chile.

TABLE 8.—AMOUNT OF CHERRIES IMPORTED INTO THE U.S.

Trading Country	Average Amount Fruit/yr. (short tons)	% of Imports
Chile	1,633	85.50
Canada	252	13.19
Swaziland	12	0.63
Others (<1% each)	13	0.68
Total	1,910	100.00

TABLE 9.—NUMBER OF FIELD TRIALS REQUIRED FOR COMMODITIES FOR WHICH IMPORT TOLERANCES ARE COMMONLY REQUESTED

Commodity	Number of Field Trials Required	Countries in Which Trials Should be Conducted [1]
Coffee	8	Brazil (3), Columbia (3), Mexico (2)
Grapes	8	Chile (3), Italy (2), France (1), Mexico (1), Argentina (1)
Oranges	12	Brazil (9), Mexico (3)
Bananas	12	Ecuador (3), Costa Rica (3), Colombia (2), Honduras (2), Guatemala (1), Mexico (1)
Apples	12	Argentina (5), Germany (4), Chile (3)
Stone Fruit		
Peaches	3	Chile (3)
Cherries	3	Chile (2), Canada (1)
Plums	5 [2]	Chile (5) [2]
Tomatoes	12	Mexico (10), Italy (1), Chile (1)
Mangoes	3	Mexico
Kiwi	3	Chile (2), New Zealand (1)

[1] The number in the parentheses indicates the number of trials that should be conducted in the country specified.
[2] The number of field trials for plums may be reduced to 3 if a tolerance for the stone fruits crop group is proposed.

TABLE 10.—PERCENT IN DIET VALUES AND NUMBER OF FIELD TRIALS REQUIRED FOR A TOLERANCE ASSOCIATED WITH A U.S. REGISTRATION FOR MOST COMMODITIES

Raw Agricultural Commodity	% Contribution to Total Exposure			No. of Field Trials for Tolerance with A U.S. Registration
	1989-91 U.S. Population	1989-91 Children (ages 1-6)	1989-91 Infants	
Acerola	0.000000	0.000000	0.000000	1 [1]
Almonds	0.007583	0.000043	0.000000	5
Apples	1.808737	4.012164	1.969677	16
Apricot	0.027213	0.032773	0.048144	5
Artichokes—Jerusalem	0.000000	0.000000	0.000000	3
Artichokes—globe	0.005846	0.001192	0.000000	3
Asparagus	0.023181	0.001589	0.000000	8
Atemoya	0.000000	0.000000	0.000000	1 [1]
Avocados	0.017335	0.005760	0.000000	5
Banana	0.577720	0.791826	0.957257	5
Barley	0.178596	0.023041	0.013825	12
Beans—Dry [2]	0.180813	0.133279	0.005965	12
Beans—Succulent [2]	0.320303	0.392089	0.220857	8 [3]
Beans—Lima— Dry Succulent [2]	0.036485	0.029198	0.008702	8 [3]
Beets—Garden—Total	0.018545	0.010687	0.035230	5
Bitter Melon	0.000000	0.000000	0.000000	5
Blackberries—Total	0.006047	0.007746	0.000211	3 [4]
Blueberries	0.026205	0.025126	0.011018	8
Boysenberries	0.003024	0.005264	0.000140	2 [1]
Broccoli, Chinese (Gai Lon)	0.000000	0.000000	0.000000	2 [1]
Broccoli	0.229796	0.276191	0.008562	8
Brussels Sprouts	0.009071	0.000596	0.000983	3
Buckwheat	0.001209	0.000596	0.000000	5
Cabbage—green and red	0.146949	0.081040	0.001895	8
Cabbage—Chinese/celery/bok choy	0.003225	0.003575	0.000000	3
Calabaza	0.000000	0.000000	0.000000	2 [1]
Canola Oil, Rape Seed Oil	0.009071	0.007746	0.001053	8
Carambola (Starfruit)	0.000000	0.000000	0.000000	2 [1]
Carob	0.000000	0.000199	0.000000	3
Carrots	0.352959	0.302509	0.683836	8
Casabas	0.000403	0.000000	0.000000	3
Cassava (Yuca Blanca)	0.003024	0.002483	0.014387	2 [1]
Cauliflower	0.039912	0.013805	0.000070	8
Celery	0.121550	0.087495	0.003439	8

TABLE 10.—PERCENT IN DIET VALUES AND NUMBER OF FIELD TRIALS REQUIRED FOR A TOLERANCE ASSOCIATED WITH A U.S. REGISTRATION FOR MOST COMMODITIES—CONTINUED

Raw Agricultural Commodity	% Contribution to Total Exposure			No. of Field Trials for Tolerance with A U.S. Registration
	1989-91 U.S. Population	1989-91 Children (ages 1-6)	1989-91 Infants	
Cherries (sweet & sour)	0.040517	0.042605	0.014036	8 [5]
Chestnuts	0.000000	0.000000	0.000000	3
Chicory (french/belgian endive)	0.004435	0.000695	0.000000	2 [1]
Chocolate (cocoa bean)	0.067125	0.089978	0.002737	3
Coconut	0.056844	0.018075	1.023086	5
Cocoyam (tanier)	0.000000	0.000000	0.000000	2 [1]
Coffee	0.052006	0.000199	0.000000	5
Collards	0.023383	0.007746	0.000000	5
Corn/pop	0.047370	0.036249	0.000000	3
Corn/sweet	0.430767	0.556453	0.043863	12
Corn	1.828693	2.117263	0.883428	20
Cottonseed	0.052006	0.057006	0.004703	12
Crabapples	0.000000	0.000000	0.000000	3
Cranberry	0.052813	0.045883	0.005053	5
Crenshaws	0.000000	0.000000	0.000000	3
Cress—upland	0.000000	0.000000	0.000000	1 [1]
Cucumbers	0.145941	0.084717	0.000983	8
Currants	0.000000	0.000000	0.000000	2 [1]
Dandelion-greens	0.000202	0.000000	0.000000	1 [1]
Dates	0.002419	0.001887	0.002948	3
Dill	0.000000	0.000000	0.000000	2 [1]
Eggplant	0.006249	0.001589	0.000000	3
Elderberries	0.000000	0.000000	0.000000	3
Endive—curly and Escarole	0.005443	0.000695	0.000000	3
Figs	0.004838	0.004767	0.000000	3
Filberts (hazelnuts)	0.000403	0.000497	0.000000	3
Flax Seed	0.000000	0.000000	0.000000	5
Garlic	0.009272	0.007945	0.000842	3
Genip (Spanish Lime)	0.000000	0.000000	0.000000	1 [1]
Ginger	0.000403	0.000298	0.000000	2 [1]
Ginseng	0.000000	0.000000	0.000000	3
Gooseberries	0.000000	0.000000	0.000000	3
Grapefruit	0.255799	0.059290	0.000772	8
Grapes	0.694629	1.213610	0.449785	12

TABLE 10.—PERCENT IN DIET VALUES AND NUMBER OF FIELD TRIALS REQUIRED FOR A TOLERANCE ASSOCIATED WITH A U.S. REGISTRATION FOR MOST COMMODITIES—CONTINUED

Raw Agricultural Commodity	% Contribution to Total Exposure			No. of Field Trials for Tolerance with A U.S. Registration
	1989-91 U.S. Population	1989-91 Children (ages 1-6)	1989-91 Infants	
Guar Beans	0.000000	0.000000	0.000000	3
Guava	0.002217	0.001688	0.000000	2 [1]
Hops	0.002217	0.000000	0.000000	3
Horseradish	0.000806	0.000298	0.000000	3
Huckleberries	0.000000	0.000000	0.000000	3
Kale	0.005039	0.005959	0.000000	3
Kiwi Fruit	0.007257	0.011818	0.000000	3
Kohlrabi	0.000000	0.000000	0.000000	3
Kumquats	0.000000	0.000000	0.000000	1 [1]
Leeks	0.000000	0.000000	0.000000	3
Lemons	0.056441	0.034164	0.000561	5
Lentils	0.003628	0.001589	0.000000	3
Lettuce (head & leaf)	0.412020	0.161881	0.002456	8 [6]
Limes	0.008869	0.004866	0.000211	3
Loganberries	0.000000	0.000000	0.000000	2 [1]
Longan	0.000000	0.000000	0.000000	1 [1]
Lotus Roots	0.000000	0.000298	0.000000	1 [1]
Lychees	0.000000	0.000000	0.000000	1 [1]
Macadamia Nuts (bush nuts)	0.000000	0.000000	0.000000	3
Maney (Mammee Apple)	0.000000	0.000000	0.000000	2 [1]
Mangoes	0.008869	0.003476	0.004070	3
Melon (including cantaloupe & honeydew)	0.138079	0.062468	0.000000	5 and 8 [7]
Millet	0.000202	0.000000	0.000000	5
Mint	0.000000	0.000000	0.000000	5 [8]
Mulberries	0.000202	0.000397	0.000000	3
Mung Beans (sprouts)	0.026205	0.034859	0.000491	8
Mushrooms	0.059263	0.041811	0.001404	3
Mustard Greens	0.005846	0.001390	0.014036	5 [9]
Nectarines	0.026608	0.015791	0.000000	8
Oats	0.230602	0.455352	0.287037	16
Okra	0.016328	0.007449	0.000000	5
Olive	0.032655	0.021253	0.000983	3
Onion—Dry Bulb	0.333809	0.242921	0.038178	8
Onions-green	0.018747	0.011421	0.000211	3

TABLE 10.—PERCENT IN DIET VALUES AND NUMBER OF FIELD TRIALS REQUIRED FOR A TOLERANCE ASSOCIATED WITH A U.S. REGISTRATION FOR MOST COMMODITIES—CONTINUED

Raw Agricultural Commodity	% Contribution to Total Exposure			No. of Field Trials for Tolerance with A U.S. Registration
	1989-91 U.S. Population	1989-91 Children (ages 1-6)	1989-91 Infants	
Orange	1.155632	1.651185	0.246403	16
Papaya	0.007660	0.001589	0.000000	3
Parsley	0.006652	0.007349	0.001263	3
Parsnips	0.000605	0.000000	0.000000	3
Passion Fruit	0.017134	0.037739	0.000070	2
Pawpaws	0.000000	0.000000	0.000000	3
Peaches	0.263056	0.343327	0.655904	12
Peanuts	0.154407	0.265266	0.005614	12
Pears	0.218508	0.240934	1.361074	8
Peas—dried [2]	0.009474	0.006157	0.005053	5 [3]
Peas—succulent [2]	0.235239	0.265862	0.167029	8 [3]
Pecans	0.006249	0.006157	0.000140	5
Pepper/black	0.001209	0.001092	0.001053	3
Peppers—sweet (garden)	0.080025	0.044890	0.002386	8
Peppers—non-bell	0.019754	0.006357	0.000000	3
Persimmons	0.000403	0.000000	0.005334	3
Pimento	0.003628	0.004270	0.000070	2 [1]
Pineapple	0.160656	0.218192	0.144431	8
Pistachio	0.001411	0.000000	0.000000	3
Plantains	0.013304	0.004866	0.003720	3
Plum	0.062690	0.061972	0.124360	8
Pomegranates	0.000000	0.000000	0.000000	3
Potato	1.791805	1.587823	0.217278	16
Pumpkin	0.010684	0.016784	0.015580	5
Quinces	0.000000	0.000000	0.000000	3
Radishes	0.010684	0.002681	0.000000	5
Radishes—Japanese (daikon)	0.000000	0.000000	0.000000	2 [1]
Raspberries	0.007861	0.003476	0.011650	3 [4]
Rhubarb	0.011691	0.007051	0.000000	2 [1]
Rice	0.463422	0.486456	0.652956	16
Rice-wild	0.001814	0.000199	0.000000	5
Rutabagas—tops and roots	0.002217	0.000000	0.000000	3
Rye	0.013707	0.006853	0.000000	5
Safflower—seed and oil	0.000202	0.000000	0.000000	5
Salsify (oyster plant)	0.000000	0.000000	0.000000	3

TABLE 10.—PERCENT IN DIET VALUES AND NUMBER OF FIELD TRIALS REQUIRED FOR A TOLERANCE ASSOCIATED WITH A U.S. REGISTRATION FOR MOST COMMODITIES—CONTINUED

Raw Agricultural Commodity	% Contribution to Total Exposure			No. of Field Trials for Tolerance with A U.S. Registration
	1989-91 U.S. Population	1989-91 Children (ages 1-6)	1989-91 Infants	
Sesame	0.000403	0.000497	0.000000	3
Shallots	0.000000	0.000000	0.000000	1 [1]
Snowpeas	0.006854	0.005264	0.000000	3
Sorghum (including milo)	0.000000	0.000000	0.000000	12
Soybeans	0.801061	0.710290	1.257067	20
Spinach	0.053216	0.052835	0.034037	8
Squash—summer	0.079824	0.042804	0.000000	5
Squash—winter	0.038703	0.015791	0.459189	5
Strawberry	0.099578	0.107954	0.001263	8
Sugar Cane	0.520065	0.576415	0.312933	8
Sugar Apples (sweetssop)	0.000000	0.000000	0.000000	2 [1]
Sugar-beet	0.443458	0.491502	0.271878	12
Sunflower	0.007055	0.007449	0.000000	8
Sweet Potatoes (including yams)	0.055433	0.026219	0.355252	8
Swiss Chard	0.001008	0.000099	0.000000	3
Tangelos	0.000000	0.000000	0.000000	3
Tangerine	0.011490	0.016883	0.000000	5
Taro-root	0.002016	0.001092	0.014808	2 [1]
Tomato	1.662796	1.485630	0.218331	16
Turnip	0.021367	0.009931	0.000421	5
Walnuts	0.006854	0.005760	0.000140	3
Watercress	0.001209	0.000000	0.000000	2 [1]
Watermelon	0.141506	0.203096	0.012422	8
Wheat	2.983519	3.370301	0.360305	20

[1] If one or two field trials are required, then four samples must be collected from each test plot.

[2] The percent in diet figures for peas, beans, and dry beans include different varieties that may require separate field trials. Petitioners are advised to consult OPPTS Guideline 860.1500 for additional information on numbers of field trials for individual varieties.

[3] These bean/pea commodities include more than one type of bean/pea. The specific commodities included in each of these groups are shown below. The specific representative commodity for which field trials should be run in each case are those representative commodities provided in crop subgroup in 40 CFR 180.41. Bean, edible podded: include those commodities listed in subgroup 6-A as *Phaseolus spp.*, *Vigna spp.*, jackbeans, soybeans (immature seed) and sword bean. Pea, edible podded: include those commodities listed in subgroup 6-A as Pisum spp. and pigeon pea. Bean, succulent shelled: include those commodities listed in subgroup 6-B as *Phaseolus spp.*, *Vigna spp.* and broad bean. Pea, succulent shelled: include those commodities listed in subgroup 6-B as *Pisum spp.* and pigeon pea. Bean, dried shelled (except soybean): include those commodities listed in subgroup 6-C as *Lupinus spp.*, *Phaseolus spp.*, *Vigna spp.*, guar and lablab beans. Pea, dried shelled: include those commodities listed in subgroup 6-C as *Pisum spp.*, lentil and pigeon pea. A minimum of three trials is required for field pea forage and hay with Austrian winter pea the preferred cultivar. Field pea seeds will be considered dried shelled peas and required a minimum of five trials. The number of trials required for dried shelled pea is based on combined acreage and consumption of dried garden pea (*Pisum spp.*) and lentil.

[4] A minimum of 5 trials (and 10 samples) is required on any one blackberry or any one raspberry if a tolerance is sought on ''caneberries.'' A minimum of 3 trials (and 6 samples) is required if a tolerance is sought only on blackberries or only on raspberries.

[5] Eight trials each for sweet and sour cherries are required.

[6] Eight trials each for head and leaf lettuce are required.

[7] Five trials are required for honeydew melons and eight trials are required for cantaloupe. A tolerance for muskmelons may be obtained using residue data for cantaloupes.

[8] A tolerance for mint may be obtained using residue data for spearmint and/or peppermint. If a tolerance is sought for either spearmint or peppermint separately, five trials are still required.

[9] A minimum of 8 trials (and 16 samples) are required on mustard greens if a tolerance is sought on the crop subgroup leafy Brassica greens.

VIII. Consideration of Codex MRLs When Establishing Import Tolerances

The 1996 FQPA amendments to FFDCA codified a longstanding Agency policy to harmonize U.S. tolerances with Codex MRLs to the extent possible. Recent trade agreements such as the NAFTA and the WTO Agreement on the Application of Sanitary and Phytosanitary Measures further encourage the use of international standards such as Codex MRLs.

When establishing or reassessing tolerances (including import tolerances), the Agency takes into consideration the Codex MRL level, the Codex commodity definition, and the metabolite(s) included in the Codex MRL definition. If use patterns and risk assessments permit, the Agency will harmonize tolerances with the Codex levels. If not, the Agency must explain why they cannot be harmonized, in accordance with FQPA.

If an existing U.S. tolerance exceeds the Codex MRL and is sufficient to cover the import use, there is no need for a revision to accommodate the MRL. During tolerance reassessment, the Agency will evaluate whether the U.S. tolerance can be lowered to the Codex level and still accommodate any existing U.S. use and/or import tolerance needs. If that is not possible, relevant information should be provided to Codex in order to support a higher Codex limit. If the Codex MRL exceeds the existing U.S. tolerance or the proposed import tolerance, then the Codex MRL may be adopted as the U.S. tolerance, provided the data support the safety findings required by the FFDCA at that level.

In the context of establishing import tolerances, four common situations are presented below that take into consideration the presence or absence of U.S. tolerances and Codex MRLs. The potential effects of Codex MRLs on data requirements for import tolerances are described, as are the Agency's approaches to harmonizing new and existing tolerances with MRLs.

1. *A U.S. tolerance and Codex MRL have been established for the chemical/commodity combination of concern.* This situation might be encountered when a U.S. registration is withdrawn or proposed for cancellation and is most likely to occur during the tolerance reassessment or reregistration process. Depending upon the status of the data base, additional data may be required to support maintenance of the U.S. tolerance as an import tolerance. Persons seeking to maintain the tolerance should review this guidance on the required number and location of field trials when determining what additional studies may be needed to support the tolerance.

During the review of the data base, the Agency will make every attempt to harmonize with the Codex level in all respects, including the numerical level and definition of residue.

2. *A Codex MRL has been established for the chemical/commodity combination of concern, but there is no U.S. tolerance.* This situation may occur when a tolerance petition for imported commodities has been submitted and there are no corresponding U.S. registrations for the commodities of interest. Normally under these circumstances the full range of data must be provided to support an import tolerance. Product chemistry data and an acceptable tolerance enforcement method must be submitted. At the same time, efforts should be made to harmonize proposed tolerance levels with Codex MRLs.

If the following conditions are met, the petitioner may propose the Codex MRL as the tolerance level, and the Agency may be able to complete its assessment of the tolerance based on a more limited review of the residue chemistry data:

i. The dietary exposure to the pesticide residue will be low, either due to low consumption of the commodity in the U.S. diet, or due to minimal expected exposure to residues in higher consumption commodities (for example, if all residues are non-detectable).

ii. A U.S. use(s) or U.S. tolerance(s) for the subject commodity(ies) has not been canceled, suspended, revoked, or denied or is not under consideration for the same as a result of human dietary risk concerns.

iii. Residues resulting from the importation of the subject commodity(ies) meet U.S. food safety standards under FFDCA.

iv. An acceptable analytical method is submitted with the petition (i.e., the method should undergo an independent lab validation and an EPA lab validation if it is not already approved for enforcement, and the applicability of multi-residue method testing for the parent compound and residues of concern should be evaluated).

v. U.S./Codex commodity and residue definitions are or can be made compatible.

If the above criteria are not met, standard data and review requirements would apply. In either case, a dietary risk assessment will be done using the Codex MRL. The Codex MRL will be established as the tolerance if FFDCA food safety standards are satisfied.

An assessment will need to be made as to whether the Codex MRL will accommodate the import tolerance need. If the Codex MRL is not high enough to accommodate the import tolerance need, it will not be adopted as the U.S. tolerance level. In these circumstances, data must be provided to support the higher level before EPA can evaluate the establishment of an import tolerance. The Agency would also recommend that the tolerance petitioner provide the relevant data to Codex to support a revised Codex limit.

3. *A U.S. tolerance has been established but there is no Codex MRL for the chemical/commodity combination of concern.* Assessment of the need for an import tolerance will need to take into account whether the U.S. tolerance supports an existing U.S. use for the commodity in question or whether the U.S. tolerance has been maintained to accommodate residues in or on imported commodities after a U.S. use has been canceled. If the former, the assessment will need to determine whether the existing U.S. tolerance will accommodate the import tolerance need. If so, no import tolerance petition is necessary. If not, the data requirements outlined in this guidance apply. Persons supporting maintenance or modification of a U.S. tolerance that has been maintained after cancellation of U.S. uses also may need to provide additional data. Residue field trial data requirements may be partly satisfied by U.S. data, if adequately justified.

In either case, the Agency also recommends that the petitioner provide the relevant data to Codex to support a Codex limit for the subject commodities.

4. *Neither a Codex MRL nor a U.S. tolerance has been established for the chemical/commodity combination of concern.* All toxicology and product and residue chemistry studies as described in this document are required for establishment of the import tolerance. U.S. import tolerances will be established provided that FFDCA food safety standards are met. The Agency also recommends that the petitioner provide the relevant data to Codex to support establishment of a Codex limit for the subject commodities.

Examples:

Following are two examples illustrating the consideration of Codex MRLs and other factors in deciding whether the Agency can conduct a more limited review of an import tolerance petition.

Example 1. ABC Company has petitioned for an import tolerance for an insecticide used on olives. There are U.S. tolerances and registrations for

several other commodities, and a Codex MRL has been established for olives. The U.S. and Codex have the same definition of ''olives.'' The U.S. tolerance expression and the Codex MRL definition are compatible. There are no dietary risk concerns with the existing tolerances, and the data base supporting them is up-to-date. There is an acceptable enforcement method in the FDA Pesticide Analytical Manual for plant commodities.

In this case, only a limited review of this chemical would be required initially. Olives are a low consumption commodity, 0.033% of the U.S. diet. A risk assessment would be done using the Codex MRL. If the assessment concludes that there are no dietary risk concerns, no further data would be required.

Example 2. Acme Chemicals would like to obtain an import tolerance for an insecticide on lima beans, and no tolerance has been established in the U.S. for this commodity. This chemical is undergoing reregistration in the U.S. and is used on several commodities. Dietary risk concerns have delayed the Reregistration Eligibility Decision. A Codex MRL has been established and the company has proposed conducting a risk assessment using the Codex MRL without submitting data. The U.S. tolerance expression for other commodities includes the parent compound, a sulfoxide, and a sulfone metabolite. The Codex MRL includes the parent only.

This proposed tolerance is not a good candidate for limited review. Although it involves a low consumption food item (0.036% of the U.S. diet), there is an existing risk concern with the chemical. Additionally, the tolerance expression differs from the Codex MRL expression, and the Agency's review must therefore include consideration of harmonization in the residue chemistry assessment.

IX. References

The following is a list of documents that are referenced in this guidance document, and that are available as described in Unit II.

1. PR Notice 96-1, ''Tolerance Enforcement Methods—Independent Laboratory Validation by Petitioner,'' February 7, 1996. (http://www.epa.gov/opppmsd1/PR—Notices)

2. PR Notice 86-5, ''Standard Format for Data Submitted Under the Federal Insecticide, Fungicide, and Rodenticide Act (FIFRA) and Certain Provisions of the Federal Food, Drug, and Cosmetic Act (FFDCA),'' July 29, 1986. (http://www.epa.gov/opppmsd1/PR—Notices)

3. OPPTS Test Guidelines, Series 830, Product Chemistry (August 1996). (http://www.epa.gov/docs/OPPTS—Harmonized/830—Product—Properties—Test—Guidelines/)

4. OPPTS Test Guidelines, Series 860, Residue Chemistry (August 1996). (http://www.epa.gov/docs/OPPTS—Harmonized/860—Residue—Chemistry—Test—Guidelines/)

5. OPPTS Test Guidelines, Series 870, Health Effects (August 1998). (http://www.epa.gov/docs/OPPTS—Harmonized/870—Health—Effects—Test—Guidelines/)

6. **Federal Register**. 54 FR 48314; November 22, 1989, List 1 and 2 Inert Ingredients.

7. Pesticide Assessment Guidelines, Subdivision F, Hazard Evaluation—Human and Domestic Animals. Series 84, Mutagenicity. Addendum 9. (1991). (Available from the National Technical Information Service under order number PB91-158394INZ. To order, call 1–800–553–6847 or e-mail orders@ntis.fedworld.gov.)

X. Intended Legal Effect of this Guidance Document

This document provides detailed guidance for EPA staff and outside parties on how U.S. data requirements apply for the establishment or continuance of tolerances for pesticide residues in or on imported foods. The purpose of this guidance is to promote greater transparency and provide clear guidance to interested parties on how to obtain an import tolerance. As guidance, this document is not binding on either EPA or any outside parties, and this document is not intended, nor can it be relied upon, to create any rights enforceable by any party in litigation with the United States.

Although this guidance provides information on the applicability of U.S. data requirements for the establishment or continuance of tolerances for pesticide residues in or on imported foods, EPA will depart from its policy where the facts or circumstances warrant. In such cases, EPA will explain why a different course was taken. Similarly, outside parties remain free to assert that the application of this guidance is not appropriate for a specific circumstance or that the circumstances surrounding a specific pesticide demonstrate that this guidance should not be applied.

In addition, the Agency is providing an opportunity for public comment on the guidance provided in this document and may also request feedback through other venues. After reviewing comments received, this document may be revised and the Agency may announce its availability in the **Federal Register**. This guidance may be used by both EPA staff and outside parties in the interim. If additional changes are necessary at some point in the future, the Agency may revise, clarify, or update the text of this guidance without public notice.

XI. Regulatory Assessment

A. General Requirements

As indicated previously, this document provides guidance for EPA staff and outside parties and is not a rulemaking. As such, the regulatory assessment requirements imposed on rulemakings do not apply to this action.

B. Paperwork Reduction Act Notice

Pursuant to the Paperwork Reduction Act (PRA), 44 U.S.C. 3501 *et seq.*, an agency may not conduct or sponsor, and a person is not required to respond to, an information collection request unless it displays a currently valid OMB control number. The OMB control numbers for EPA's regulations, after appearing in the preamble of the final rule, are listed in 40 CFR part 9 and 48 CFR chapter 15, and included on the related collection instrument.

This guidance document does not contain any new information collection requirements that would require additional OMB review and approval. The information collection activities related to the process and informational needs for requesting that the Agency establish or provide an exemption from the establishment of a tolerance or maximum residue level for the use of a pesticide on food or feed crops, which are contained in 40 CFR part 180, are already approved by OMB under OMB control number 2070–0024 (EPA ICR No. 597). The annual respondent burden for the information collection activities in 40 CFR part 180 is estimated to average 1,726 hours per petition, including time for reading the regulations, processing, compiling and reviewing the requested data, generating the request, storing, filing, and maintaining the data.

As defined by the PRA and 5 CFR 1320.3(b), ''burden'' means the total time, effort, or financial resources expended by persons to generate, maintain, retain, or disclose or provide information to or for a Federal agency. This includes the time needed to review instructions; develop, acquire, install, and utilize technology and systems for the purposes of collecting, validating, and verifying information, processing and maintaining information, and disclosing and providing information; adjust the existing ways to comply with any previously applicable instructions and requirements; train personnel to be able to respond to a collection of

information; search data sources; complete and review the collection of information; and transmit or otherwise disclose the information.

Comments regarding the Agency's need for this information, the accuracy of the provided burden estimates, and any suggested methods for minimizing respondent burden, including through the use of automated collection techniques, should be sent to the Director, Collection Strategies Division, Office of Environmental Information, U.S. Environmental Protection Agency (Mail Code 2822), 1200 Pennsylvania Avenue, NW., Washington, DC 20460. Include the OMB control number in any correspondence, but do not submit the requested information to this address. The requested information should be submitted in accordance with the instructions accompanying the form, or as specified in the corresponding regulation.

XII. Submission to Congress and the Comptroller General

The Congressional Review Act, 5 U.S.C. 801 *et seq.*, as added by the Small Business Regulatory Enforcement Fairness Act of 1996, does not apply because this action is not a rule for purposes of 5 U.S.C. 804(3).

List of Subjects

Environmental protection, Administrative practice and procedure, Agricultural commodities, Pesticides and pests, Tolerance and tolerances, Import and Imports, Reporting and recordkeeping requirements.

Dated: May 23, 2000.

Marcia E. Mulkey,

Director, Office of Pesticide Programs.

[FR Doc. 00–13708 Filed 5–31–00; 8:45 am]

BILLING CODE 6560–50–F

FEDERAL COMMUNICATIONS COMMISSION

Notice of Public Information Collection(s) Being Reviewed by the Federal Communications Commission, Comments Requested

May 24, 2000.

SUMMARY: The Federal Communications Commission, as part of its continuing effort to reduce paperwork burden invites the general public and other Federal agencies to take this opportunity to comment on the following information collection, as required by the Paperwork Reduction Act of 1995, Public Law 104–13. An agency may not conduct or sponsor a collection of information unless it displays a currently valid control number. No person shall be subject to any penalty for failing to comply with a collection of information subject to the Paperwork Reduction Act (PRA) that does not display a valid control number. Comments are requested concerning (a) whether the proposed collection of information is necessary for the proper performance of the functions of the Commission, including whether the information shall have practical utility; (b) the accuracy of the Commission's burden estimate; (c) ways to enhance the quality, utility, and clarity of the information collected; and (d) ways to minimize the burden of the collection of information on the respondents, including the use of automated collection techniques or other forms of information technology.

DATES: Written comments should be submitted on or before July 31, 2000. If you anticipate that you will be submitting comments, but find it difficult to do so within the period of time allowed by this notice, you should advise the contact listed below as soon as possible.

ADDRESSES: Direct all comments to Les Smith, Federal Communications Commissions, 445 12th Street, S.W., Room 1–A804, Washington, DC 20554 or via the Internet to lesmith@fcc.gov.

FOR FURTHER INFORMATION CONTACT: For additional information or copies of the information collections contact Les Smith at (202) 418–0217 or via the Internet at lesmith@fcc.gov.

SUPPLEMENTARY INFORMATION:

OMB Control Number: 3060–XXXX.

Title: Amendment of the Commission's Rules to Establish New Personal Communications Services, Narrowband PCS.

Form Number: N/A.

Type of Review: New collection.

Respondents: Business or other for-profit; Individuals or households; Not-for-profit institutions; Federal Government; and State, Local or Tribal Government.

Number of Respondents: 1,500.

Estimated Time Per Response: 3.5 hrs. (avg.).

Frequency of Response: On occasion.

Total Annual Burden: 5,250 hours.

Total Annual Costs: $1,050,000.

Needs and Uses: The amendments to the Commission's narrowband Personal Communications Services rules adopted in this proceeding will improve the efficiency of spectrum use, reduce the regulatory burden on spectrum users, encourage competition, and promote service to the largest feasible number of users.

Federal Communications Commission.

Magalie Roman Salas,

Secretary.

[FR Doc. 00–13591 Filed 5–31–00; 8:45 am]

BILLING CODE 6712–01–P

FEDERAL COMMUNICATIONS COMMISSION

Notice of Public Information Collection(s) Being Reviewed by the Federal Communications Commission

May 24, 2000.

SUMMARY: The Federal Communications Commission, as part of its continuing effort to reduce paperwork burden invites the general public and other Federal agencies to take this opportunity to comment on the following information collection(s), as required by the Paperwork Reduction Act of 1995, Public Law 104–13. An agency may not conduct or sponsor a collection of information unless it displays a currently valid control number. No person shall be subject to any penalty for failing to comply with a collection of information subject to the Paperwork Reduction Act (PRA) that does not display a valid control number. Comments are requested concerning (a) whether the proposed collection of information is necessary for the proper performance of the functions of the Commission, including whether the information shall have practical utility; (b) the accuracy of the Commission's burden estimate; (c) ways to enhance the quality, utility, and clarity of the information collected; and (d) ways to minimize the burden of the collection of information on the respondents, including the use of automated collection techniques or other forms of information technology.

DATES: Written comments should be submitted on or before July 3, 2000. If you anticipate that you will be submitting comments, but find it difficult to do so within the period of time allowed by this notice, you should advise the contact listed below as soon as possible.

ADDRESSES: Direct all comments to Judy Boley, Federal Communications Commission, Room 1–C804, 445 12th Street, SW, DC 20554 or via the Internet to jboley@fcc.gov.

FOR FURTHER INFORMATION CONTACT: For additional information or copies of the information collection(s), contact Judy Boley at 202–418–0214 or via the Internet at jboley@fcc.gov.

SUPPLEMENTARY INFORMATION:

OMB Control No.: 3060–XXXX.

Title: Amendment of Part 95 of the Commission's Rules to Provide Regulatory Flexibility in the 218–219 MHz Service, WT Docket 98–168.

Form No.: N/A.

Type of Review: New collection.

Respondents: Business or other for-profit.

Number of Respondents: 140.

Estimated Time Per Response: .50 to 4 hours.

Frequency of Response: On occasion and one-time reporting requirement.

Total Annual Burden: 980 hours.

Total Annual Cost: N/A.

Needs and Uses: This new information collection requirement allows the Commission to offer 218–219 MHz service licensees various options for their existing installment payment options. This will allow licensees to meet their financial obligations and ensure rapid provision for the 218–219 MHz service to the public.

The information reporting requirements in WT Docket No. 98–168, Report and Order, will be used to advise the Commission for the option chosen by the Eligible Licensees. Additionally, the Commission will know the amount due under the various options selected by the Eligible Licensees. This will permit the Commission to determine if a licensee subsequently defaults. In addition, this information will allow the Commission to offer the licenses returned under the Amnesty and Prepayment options in a subsequent auction.

Federal Communications Commission.

Magalie Roman Salas,

Secretary.

[FR Doc. 00–13592 Filed 5–31–00; 8:45 am]

BILLING CODE 6712–01–P

FEDERAL ELECTION COMMISSION

Sunshine Act Meeting

AGENCY: Federal Election Commission.

DATE & TIME: *Tuesday, June 6, 2000, at 10 a.m.*

PLACE: 999 E Street, N.W., Washington, D.C.

STATUS: This meeting will be closed to the public.

ITEMS TO BE DISCUSSED:

Compliance matters pursuant to 2 U.S.C. § 437g.

Audits conducted pursuant to 2 U.S.C. § 437g, § 438(b), and Title 26, U.S.C.

Matters concerning participation in civil actions or proceedings or arbitration.

Internal personnel rules and procedures or matters affecting a particular employee.

DATE & TIME: *Thursday, June 8, 2000, at 10 a.m.*

PLACE: 999 E Street, N.W. Washington, D.C. (ninth floor).

STATUS: This meeting will be open to the public.

ITEMS TO BE DISCUSSED: Correction and Approval of Minutes.

Draft Advisory Opinion 1999–38–Ken Calvert for Congress Committee by counsel. Nicholas C. Vasels.

Draft Advisory Opinion 2000–08–Philip D. Harvey.

Final Rules and Explanation and Justification on Mandatory Electronic Filing: (11 CFR§ 104.18).

Administrative Matters.

PERSON TO CONTACT FOR INFORMATION: Mr. Ron Harris, Press Officer, Telephone: (202) 694–12220.

Mary W. Dove,

Acting Secretary.

[FR Doc. 00–13889 Filed 5–30–00; 3:15 pm]

BILLING CODE 6715–01–M

FEDERAL MARITIME COMMISSION

Notice of Agreement(s) Filed

The Commission hereby gives notice of the filing of the following agreement(s) under the Shipping Act of 1984. Interested parties can review or obtain copies of agreements at the Washington, DC offices of the Commission, 800 North Capitol Street, NW, Room 962. Interested parties may submit comments on an agreement to the Secretary, Federal Maritime Commission, Washington, DC 20573, within 10 days of the date this notice appears in the **Federal Register**.

Agreement No.: 011548–004.

Title: Hanjin/Sinotrans Cross Space Charter & Sailing Agreement.

Parties: Hanjin Shipping Co., Ltd., China National Foreign Trade Transportation Corp.

Synopsis: The proposed modification changes the agreement's name; restates the geographic scope; specifies the number of the vessels to be provided by each party, their capacity, and initial rotation; changes slot allocations; and makes other conforming and administrative changes.

Agreement No.: 011648–003.

Title: APL/Crowley/Lykes/MLL Space Charter and Sailing Agreement.

Parties: American President Lines, Ltd., APL Co. PTE Ltd,. Crowley Liner Services, Inc., Crowley American Transport, Lykes Lines Limited, LLC, Mexican Lines Limited, Transportacion Maritima Grancolombiana, S.A. (''TMG'').

Synopsis: The proposed amendment deletes TMG as a party to the Agreement; revises the Agreement's termination and withdrawal provisions; and updates provisions related to vessels, slot allocations, and sub-chartering.

By Order of the Federal Maritime Commission.

Dated: May 26, 2000.

Theodore A. Zook,

Assistant Secretary.

[FR Doc. 00–13738 Filed 5–31–00; 8:45 am]

BILLING CODE 6730–01–P

FEDERAL MARITIME COMMISSION

Ocean Transportation Intermediary License; Applicant

Notice is hereby given that the following applicants have filed with the Federal Maritime Commission an application for licenses as Non-Vessel Operating Common Carrier and Ocean Freight Forwarder—Ocean Transportation Intermediary pursuant to section 19 of the Shipping Act of 1984 as amended (46 U.S.C. app. 1718 and 46 CFR 515).

Persons knowing of any reason why the following applicants should not receive a license are requested to contact the Office of Transportation Intermediaries, Federal Maritime Commission, Washington, DC 20573.

Non-Vessel-Operating Common Carrier Ocean Transportation Intermediary Applicants

Latin Freight International, Inc., 1348 N.W. 78th Avenue, Miami, FL 33126. Officers: Eduardo Blanco, President (Qualifying Individual), Rebeca Blanco, Vice President.

Horizon International Shipping, Inc., 9165 N.W. 101 Street, Medley, FL 33178. Officer: Maria V. Daenecke Director (Qualifying Individual).

Xing Ya Shipping LLC, 23929 W. Valencia Blvd., Suite #204, Valencia, CA 91354. Officers: Roger Yang, Operations Manager (Qualifying Individual), Zang Yi Bai, General Manager.

AGI Logistics Corporation, 168–18 South Conduit Avenue, Jamaica, NY 11434. Officer: James Minutello, President (Qualifying Individual).

FRS Freight Services, Inc., 69–05 Roosevelt Avenue, Roosevelt Avenue, Woodside, NY 11377. Officers: Alejandro P. Arce, President Qualifying Individual), Luis Gregorio P. Arce, Secretary.

United World Express, Inc., 1951 McGarry Street, Los Angeles, CA 90058. Officers: Stella Pyon, Secretary

(Qualifying Individual), Byung Yul Chang, C.E.O.

Aruba Caribbean Cargo, Inc., 2746 NW 112 Avenue, Miami, FL 33172. Officer: Lydia Arends, President (Qualifying Individual).

Estes Express Lines, 3901 W. Broad Street, Richmond, VA 23230. Officer: Paul Dugent, Vice President (Qualifying Individual).

Relogistics International, Inc., 16 Bonnievale Drive, Bedford, MA 01730. Officer: Mary A. Sortal, President (Qualifying Individual).

Non-Vessel Operating Common Carrier and Ocean Freight Forwarder Transportation Intermediary Applicants

American Country Gourmet Collection, Inc., 2334 Oak Drive, Steilacoom, WA 98388. Officer: Jesse R. Womack, President (Qualifying Individual).

FedEx Supply Chain Services, Inc., d/b/a FedEx Logistics, 5455 Darrow Road, Hudson, OH 44236. Officers: Rodney M. Miller, Vice President (Qualifying Individual), Gary D. Gilbert, President.

Foreign Cargo Management Corp. d/b/a FCM Transport, 80–104 Orville Drive, Bohemia, NY 11718. Officers: Paul Thompson, Vice President (Qualifying Individual), Thomas Anderson, President.

EKKA Forwarding Inc., 530 Main Street, Suite #1, Fort Lee, NJ 07024. Officers: Harry Chung (Kihwa Chung), Managing Director (Qualifying Individual), Jae Y. Chang, President.

Ocean Freight Forwarders—Ocean Transportation Intermediary Applicants

DCM Logistics, Inc., 540 Rams Way, Tucker, GA 30084. Officer: Demetri C. Miltiades, President.

Treatmont Chartering (USA), Inc., Two Lakeway, 3850 N. Causeway Blvd., Suite 827, Metairie, LA 70002. Officers: Leo Mercado, Vice President (Qualifying Individual), Michael H. Belmer, President.

Dated: May 26, 2000.

Theodore A. Zook,

Assistant Secretary.

[FR Doc. 00–13737 Filed 5–31–00; 8:45 am]

BILLING CODE 6730–01–P

FEDERAL MARITIME COMMISSION

Ocean Transportation Intermediary License; Rescission of Order of Revocation

Notice is hereby given that the Order revoking the license of Ned Shipping Co., Inc. is being rescinded by the Federal Maritime Commission pursuant to sections 14 and 19 of the Shipping Act of 1984 (46 U.S.C. app. 1718) and the regulations of the Commission pertaining to the licensing of Ocean Transportation Intermediaries, 46 CFR part 515.

License No. and Name/Address

2045—Ned Shipping Co., Inc., 5247 Wisconsin Ave., N.W. #3, Washington, D.C. 20015

Sandra L. Kusumoto,

Director, Bureau of Consumer Complaints and Licensing.

[FR Doc. 00–13739 Filed 5–31–00; 8:45 am]

BILLING CODE 6730–01–P

FEDERAL RESERVE SYSTEM

Change in Bank Control Notices; Acquisitions of Shares of Banks or Bank Holding Companies

The notificants listed below have applied under the Change in Bank Control Act (12 U.S.C. 1817(j)) and § 225.41 of the Board's Regulation Y (12 CFR 225.41) to acquire a bank or bank holding company. The factors that are considered in acting on the notices are set forth in paragraph 7 of the Act (12 U.S.C. 1817(j)(7)).

The notices are available for immediate inspection at the Federal Reserve Bank indicated. The notices also will be available for inspection at the offices of the Board of Governors. Interested persons may express their views in writing to the Reserve Bank indicated for that notice or to the offices of the Board of Governors. Comments must be received not later than June 14, 2000.

A. Federal Reserve Bank of Dallas (W. Arthur Tribble, Vice President), 2200 North Pearl Street, Dallas, Texas 75201–2272:

1. Sharon Lord Caskey, Georgetown, Texas, Roger Griffin Lord, Belton, Texas, and John Arthur Kirkpatrick, Leander, Texas; to acquire voting shares of First Texas Bancorp, Inc., Georgetown, Texas, and thereby indirectly acquire voting shares of First Texas Bank, Lampasas, Texas; First Texas Bank, Round Rock, Texas; First Texas Bank, Killeen, Texas; First Texas Bank, Georgetown, Texas; and First Texas Bank, Belton, Texas.

Board of Governors of the Federal Reserve System, May 25, 2000.

Robert deV. Frierson,

Associate Secretary of the Board.

[FR Doc. 00–13603 Filed 5–31–00; 8:45 am]

BILLING CODE 6210–01–P

FEDERAL RESERVE SYSTEM

Formations of, Acquisitions by, and Mergers of Bank Holding Companies

The companies listed in this notice have applied to the Board for approval, pursuant to the Bank Holding Company Act of 1956 (12 U.S.C. 1841 *et seq.*) (BHC Act), Regulation Y (12 CFR part 225), and all other applicable statutes and regulations to become a bank holding company and/or to acquire the assets or the ownership of, control of, or the power to vote shares of a bank or bank holding company and all of the banks and nonbanking companies owned by the bank holding company, including the companies listed below.

The applications listed below, as well as other related filings required by the Board, are available for immediate inspection at the Federal Reserve Bank indicated. The application also will be available for inspection at the offices of the Board of Governors. Interested persons may express their views in writing on the standards enumerated in the BHC Act (12 U.S.C. 1842(c)). If the proposal also involves the acquisition of a nonbanking company, the review also includes whether the acquisition of the nonbanking company complies with the standards in section 4 of the BHC Act (12 U.S.C. 1843). Unless otherwise noted, nonbanking activities will be conducted throughout the United States. Additional information on all bank holding companies may be obtained from the National Information Center website at www.ffiec.gov/nic/.

Unless otherwise noted, comments regarding each of these applications must be received at the Reserve Bank indicated or the offices of the Board of Governors not later than June 23, 2000.

A. Federal Reserve Bank of Chicago (Phillip Jackson, Applications Officer) 230 South LaSalle Street, Chicago, Illinois 60690–1414:

1. Northwest Financial Corp., Spencer, Iowa; to acquire at least 98.49 percent of the voting shares of Marquette Bank Oelwein, N.A., Oelwein, Iowa.

Board of Governors of the Federal Reserve System, May 25, 2000.

Robert deV. Frierson,

Associate Secretary of the Board.

[FR Doc. 00–13604 Filed 5–31–00; 8:45 am]

BILLING CODE 6210–01–P

FEDERAL RESERVE SYSTEM

Formations of, Acquisitions by, and Mergers of Bank Holding Companies; Correction

This notice corrects a notice (FR Doc. 00–13255) published on page 34182 of the issue for Friday, May 26, 2000.

Under the Federal Reserve Bank of St. Louis heading, the entry for Heritage Group, Inc., Aurora, Nebraska, is revised to read as follows:

A. Federal Reserve Bank of Kansas City (D. Michael Manies, Assistant Vice President) 925 Grand Avenue, Kansas City, Missouri 64198–0001:

1. Heritage Group, Inc., Aurora, Nebraska; to acquire 100 percent of the voting shares of City National Bank and Trust Company, Hastings, Nebraska.

Comments on this application must be received by June 19, 2000.

Board of Governors of the Federal Reserve System, May 26, 2000.

Robert deV. Frierson,

Associate Secretary of the Board.

[FR Doc. 00–13710 Filed 5–31–00; 8:45 am]

BILLING CODE 6210–01–P

FEDERAL RESERVE SYSTEM

Formations of, Acquisitions by, and Mergers of Bank Holding Companies

The companies listed in this notice have applied to the Board for approval, pursuant to the Bank Holding Company Act of 1956 (12 U.S.C. 1841 *et seq.*) (BHC Act), Regulation Y (12 CFR Part 225), and all other applicable statutes and regulations to become a bank holding company and/or to acquire the assets or the ownership of, control of, or the power to vote shares of a bank or bank holding company and all of the banks and nonbanking companies owned by the bank holding company, including the companies listed below.

The applications listed below, as well as other related filings required by the Board, are available for immediate inspection at the Federal Reserve Bank indicated. The application also will be available for inspection at the offices of the Board of Governors. Interested persons may express their views in writing on the standards enumerated in the BHC Act (12 U.S.C. 1842(c)). If the proposal also involves the acquisition of a nonbanking company, the review also includes whether the acquisition of the nonbanking company complies with the standards in section 4 of the BHC Act (12 U.S.C. 1843). Unless otherwise noted, nonbanking activities will be conducted throughout the United States. Additional information on all bank holding companies may be obtained from the National Information Center website at www.ffiec.gov/nic/.

Unless otherwise noted, comments regarding each of these applications must be received at the Reserve Bank indicated or the offices of the Board of Governors not later than June 26, 2000.

A. Federal Reserve Bank of San Francisco (Maria Villanueva, Consumer Regulation Group) 101 Market Street, San Francisco, California 94105–1579:

1. North Bay Bancorp, Napa, California; to acquire 100 percent of the voting shares of Solano Bank (in organization), Vacaville, California.

Board of Governors of the Federal Reserve System, May 26, 2000.

Robert deV. Frierson,

Associate Secretary of the Board.

[FR Doc. 00–13711 Filed 5–31–00; 8:45 am]

BILLING CODE 6210–01–P

FEDERAL RESERVE SYSTEM

Notice of Proposals To Engage in Permissible Nonbanking Activities or To Acquire Companies That Are Engaged in Permissible Nonbanking Activities

The companies listed in this notice have given notice under section 4 of the Bank Holding Company Act (12 U.S.C. 1843) (BHC Act) and Regulation Y, (12 CFR part 225) to engage *de novo,* or to acquire or control voting securities or assets of a company, including the companies listed below, that engages either directly or through a subsidiary or other company, in a nonbanking activity that is listed in § 225.28 of Regulation Y (12 CFR 225.28) or that the Board has determined by Order to be closely related to banking and permissible for bank holding companies. Unless otherwise noted, these activities will be conducted throughout the United States.

Each notice is available for inspection at the Federal Reserve Bank indicated. The notice also will be available for inspection at the offices of the Board of Governors. Interested persons may express their views in writing on the question whether the proposal complies with the standards of section 4 of the BHC Act. Additional information on all bank holding companies may be obtained from the National Information Center website at www.ffiec.gov/nic/.

Unless otherwise noted, comments regarding the applications must be received at the Reserve Bank indicated or the offices of the Board of Governors not later than June 14, 2000.

A. Federal Reserve Bank of San Francisco (Maria Villanueva, Consumer Regulation Group) 101 Market Street, San Francisco, California 94105–1579:

1. Silicon Valley Bancshares, Inc., Santa Clara, California; to engage *de novo* through its subsidiary, SVB Strategic Investors Fund, L.P., Santa Clara, California, in acting as investment or financial advisor directly or indirectly, pursuant to § 225.28(b)(6) of Regulation Y.

Board of Governors of the Federal Reserve System, May 25, 2000.

Robert deV. Frierson,

Associate Secretary of the Board.

[FR Doc. 00–13605 Filed 5–31–00; 8:45 am]

BILLING CODE 6210–01–P

FEDERAL RESERVE SYSTEM

Federal Open Market Committee; Domestic Policy Directive of March 21, 2000

In accordance with § 71.5 of its rules regarding availability of information (12 CFR part 271), there is set forth below the domestic policy directive issued by the Federal Open Market Committee at its meeting held on March 21, 2000. [1]

The Federal Open Market Committee seeks monetary and financial conditions that will foster price stability and promote sustainable growth in output. To further its long-run objectives, the Committee in the immediate future seeks conditions in reserve markets consistent with increasing the federal funds rate to an average of around 6 percent.

By order of the Federal Open Market Committee, May 24, 2000.

Donald L. Kohn,

Secretary, Federal Open Market Committee.

[FR Doc. 00–13644 Filed 5–31–00; 8:45 am]

BILLING CODE 6210–01–P

FEDERAL RESERVE SYSTEM

Sunshine Act Meeting

AGENCY HOLDING THE MEETING: Board of Governors of the Federal Reserve System

TIME AND DATE: 11 a.m., Monday, June 5, 2000.

PLACE: Marriner S. Eccles Federal Reserve Board Building, 20th and C Streets, N.W., Washington, D.C. 20551.

STATUS: Closed.

[1] Copies of the Minutes of the Federal Open Market Committee meeting of March 21, 2000, which include the domestic policy directive issued at that meeting, are available upon request to the Board of Governors of the Federal Reserve System, Washington, D.C. 20551. The minutes are published in the Federal Reserve Bulletin and in the Board's annual report.

MATTERS TO BE CONSIDERED:

1. Personnel actions (appointments, promotions, assignments, reassignments, and salary actions) involving individual Federal Reserve System employees.

2. Any items carried forward from a previously announced meeting.

CONTACT PERSON FOR MORE INFORMATION: Lynn S. Fox, Assistant to the Board; 202–452–3204.

SUPPLEMENTARY INFORMATION: You may call 202–452–3206 beginning at approximately 5 p.m. two business days before the meeting for a recorded announcement of bank and bank holding company applications scheduled for the meeting; or you may contact the Board's Web site at http://www.federalreserve.gov for an electronic announcement that not only lists applications, but also indicates procedural and other information about the meeting.

Dated: May 26, 2000.

Robert deV. Frierson,

Associate Secretary of the Board.

[FR Doc. 00–13781 Filed 5–26–00; 4:36 pm]

BILLING CODE 6210–01–P

DEPARTMENT OF HEALTH AND HUMAN SERVICES

Centers for Disease Control and Prevention

[30 DAY–39–00]

Agency Forms Undergoing Paperwork Reduction Act Review

The Centers for Disease Control and Prevention (CDC) publishes a list of information collection requests under review by the Office of Management and Budget (OMB) in compliance with the Paperwork Reduction Act (44 U.S.C. Chapter 35). To request a copy of these requests, call the CDC Reports Clearance Officer at (404) 639–7090. Send written comments to CDC, Desk Officer; Human Resources and Housing Branch, New Executive Office Building, Room 10235; Washington, DC 20503. Written comments should be received within 30 days of this notice.

Proposed Projects

1. The State and Local Area Integrated Survey (SLAITS)—(0920–0406) The Health Resources and Services Administration/Maternal and Child Health Bureau, in partnership with the National Center for Health Statistics (NCHS), Centers for Disease Control and Prevention (CDC) is conducting a new national survey on children with special health care needs (CSHCN) to be conducted in all states and the District of Columbia. The survey is part of NCHS's State and Local Area Integrated Telephone Survey (SLAITS), a telephone survey platform which uses the National Immunization Survey sample frame and was described in a **Federal Register** notice dated October 22, 1998 (Volume 63, Number 204, pages 56654–56655). This collection of data is authorized by 42 U.S.C. 242k.

The survey will provide, for the first time, uniform national and state-specific data on CSHCN prevalence and impact. In addition, the survey will provide baseline estimates for federal and state performance measures, the year 2010 national prevention objectives, and data for each State's Title V five-year needs assessment. Health care coverage information will be collected on children with and without special health care needs. Those without any health care coverage will be asked a brief set of questions about their familiarity with the State Children's Health Insurance Program.

A screening interview will be completed with parents and guardians in randomly selected households in order to identify children (0–17 years of age) with special health care needs. This initial screening interview will include a brief battery of questions about the presence of special health care needs, as well as demographic questions needed to manage the sample design and estimation process. Approximately 14% to 18% of the screened children are expected to have a special health care need. When a child is identified with a special need, a 15-minute supplemental interview will be completed, including questions on demographics and household income; health and functional status; health insurance; adequacy of health care coverage; access to care; utilization of care; care coordination; satisfaction with care; and impact on the family. For screened children who do not have special health care needs, a sub-sample of parents and guardians will complete a short supplemental interview on health insurance so that state-specific estimates of health insurance coverage for all children can be produced.

Screening interviews will be conducted with about 3,400 families in each state with a goal of identifying 750 children with special health care needs. This sample size will permit accurate and reliable state-level estimates of the prevalence of special health care needs and of associated characteristics such as insurance coverage. State samples of 3,000 children without special health care needs will be asked health insurance coverage questions and about 26,000 families will be asked SCHIP awareness questions. The survey is scheduled to begin in July, 2000, and will remain in the field for 12 months. There is no dollar cost to respondents. The approved burden budget for SLAITS includes the burden hours for this survey. The total burden hours are estimated at 34,819.

Respondents	No. of respondents	No. of responses/ respondents	Average burden/ response (in hrs.)	Total burden (in hrs.)
Screened Households	102,479	1	6/60	18,248
Families of children with special health care needs	39,750	1	15/60	9,938
Families of children without special health care needs—insurance status	159,000	1	2/60	5,300
SCHIP for uninsured children	26,659	1	3/60	1,333
Total				34,819

Dated: May 25, 2000.

Charles W. Gollmar,

Acting Associate Director for Policy, Planning and Evaluation, Centers for Disease Control and Prevention (CDC).

[FR Doc. 00–13650 Filed 5–31–00; 8:45 am]

BILLING CODE 4163–18–P

DEPARTMENT OF HEALTH AND HUMAN SERVICES

Centers for Disease Control and Prevention

[30 DAY–38–00]

Agency Forms Undergoing Paperwork Reduction Act Review

The Centers for Disease Control and Prevention (CDC) publishes a list of information collection requests under review by the Office of Management and Budget (OMB) in compliance with the Paperwork Reduction Act (44 U.S.C. Chapter 35). To request a copy of these requests, call the CDC Reports Clearance Officer at (404) 639–7090. Send written comments to CDC, Desk Officer; Human Resources and Housing Branch, New Executive Office Building, Room 10235; Washington, DC 20503. Written comments should be received within 30 days of this notice.

Proposed Projects

1. Preventive Health and Health Services Block Grant, Annual Application and Reports (0920–0106)—Extension—The Centers for Disease Control and Prevention (CDC), National Center for Chronic Disease Prevention and Health Promotion—In 1997, the Office of Management and Budget approved the collection of information provided in the grant applications and annual reports for the Preventive Health and Health Services Block Grant (0920–0106). This approval expires on November 30, 2000. CDC is requesting an extension of OMB clearance for this legislatively mandated information collection until November 30, 2001. The extension is limited to one year to allow for the development and adherence to *Healthy People 2010* to be released the Spring of 2000. The Preventive Health and Health Services Block Grant is mandated according to section 1904 to adhere to the Healthy People framework, therefore, the current application and report format will be restructured to coincide with 2010 and resubmitted for OMB clearance at that time.

This information collected through the applications from the official State health agencies is required from section 1905 of the Public Health Service Act. There is no change in the proposed information collection from previous years. The information collected from the annual reports is required by section 1906, specifically the requirement for uniform data sets matching the uses of funds. The total estimated annual burden is 5490 hours.

Respondents	No. of respondents	No. of responses/ respondent	Average burden per response (in hrs.)	Total burden
Application	61	1	30	1830
Report	61	1	60	3660
Total				5490

Dated: May 25, 2000.

Charles W. Gollmar,

Acting Associate Director for Policy, Planning and Evaluation, Centers for Disease Control and Prevention (CDC).

[FR Doc. 00–13651 Filed 5–31–00; 8:45 am]

BILLING CODE 4163–18–P

DEPARTMENT OF HEALTH AND HUMAN SERVICES

Centers for Disease Control and Prevention

[Program Announcement 00092]

Grant Program for the Hale Empowerment and Revitalization Organization (HERO); Notice of Availability of Funds

A. Purpose

The Centers for Disease Control and Prevention (CDC) announces the availability of fiscal year (FY) 2000 funds for a grant program to the Hale Empowerment and Revitalization Organization (HERO). CDC is committed to achieving the health promotion and disease prevention objectives of ''Healthy People 2010'' a national activity to reduce morbidity and mortality and improve the quality of life. This announcement is related to focus area to increase Access to Quality Health Services. For the conference copy of ''Healthy People 2010,'' visit the internet site: http://www.health.gov/healthypeople.

The purpose of this program is to increase the health and social status of the population in Hale County, Alabama by eliminating barriers to health and social services. This goal will be attained though the voluntary collaboration of organizations and individuals concerned with the welfare of under-served and disparately affected populations of Hale County, Alabama.

B. Eligible Applicant

Assistance will be provided only to the Hale Empowerment and Revitalization Organization (HERO), Hale County, Alabama. No other applications are solicited. The Conference Report (H.R. Rep. 106–479, at 601 (1999) to the Consolidated Appropriations Act, 2000, Public Law 106–113, directs CDC to fund the Hale County, Alabama, HERO program.

C. Availability of Funds

Approximately $130,000 is available in FY 2000, to fund the Hale Empowerment and Revitalization Organization in Hale County, Alabama. It is expected that the award will begin on or about September 30, 2000, and will be made for a 12-month budget period within a project period of one year. Funding estimates may change.

D. Where To Obtain Additional Information

If you have questions after reviewing the contents of all the documents, business management/technical assistance may be obtained from: Barry Copeland, Grants Management Specialist, Grants Management Branch, Procurement and Grants Office, Centers for Disease Control and Prevention (CDC), Announcement Number 00092, Room 3000, 2920 Brandywine Road, Atlanta, GA 30341–4146, telephone (770) 488–2762, E-mail address: bjc8@cdc.gov.

This and other CDC announcement can be found on the CDC home page on the Internet: http://www.cdc.gov.

For program technical assistance, contact: James B. Holt, M.P.A., Deputy

Director, Division of Adult and Community Health, National Center for Chronic Disease Prevention and Health Promotion, Centers for Disease Control and Prevention (CDC), 4770 Buford Highway, NE., Atlanta, GA 30341–3724, telephone: 404–488–5269; E-mail address: jgh4@cdc.gov.

Dated: May 24, 2000.

John L. Williams,

Director, Procurement and Grants Office, Centers for Disease Control and Prevention (CDC).

[FR Doc. 00–13648 Filed 5–31–00; 8:45 am]

BILLING CODE 4163–18–P

DEPARTMENT OF HEALTH AND HUMAN SERVICES

Centers for Disease Control and Prevention

[Announcement Number 00087]

Cooperative Agreement Between CDC and ASTHO; Tobacco Control Information and Resource Network (ASTHO)

A. Purpose

The Centers for Disease Control and Prevention (CDC) announces the availability of funds in fiscal year (FY) 2000 for a cooperative agreement with the Association of State and Territorial Health Officials (ASTHO) to enhance its capacity to provide information and technical assistance to State Health Officials (SHOs) and affiliate member groups. CDC is committed to achieving the health promotion and disease prevention objectives of ''Healthy People 2010,'' a national activity to reduce morbidity and mortality and improve the quality of life. This announcement is related to the focus areas of Tobacco use and the areas related to chronic disease prevention and control. For the conference copy of ''Healthy People 2010'', visit the Internet site: <http://www.health.gov/healthypeople>.

The purpose of this program is to address issues related to:

1. Tobacco-use prevention and control programs;

2. The following four goal areas outlined in CDC's National Tobacco Control Program:

a. Eliminate exposure to environmental tobacco smoke;

b. Promote quitting among young people and adults;

c. Prevent initiation among young people; and

d. Identify and eliminate disparities among population groups);

3. Maintain a forum where State tobacco control managers can communicate among themselves and with SHOs and ASTHO affiliates about tobacco-related issues impacting their States; and,

4. Chronic disease prevention and control programs as they relate to tobacco use prevention and control.

B. Eligible Applicant

Assistance will be provided only to ASTHO. No other applications are solicited.

ASTHO is the only organization that represents all State and territorial public health officials, including a network of State health department tobacco-control representatives.

ASTHO was created specifically to represent this group of State agencies to the Federal government and other national organizations and is unique in its role as a liaison among these officials. It has served as a capacity-building organization in public health matters for many years and one of its major objectives is the sharing of information among State health departments.

ASTHO has established a unique network of public health professionals in each State and territory who are concerned with tobacco-use and chronic disease prevention and control programs. ASTHO has maintained active involvement in tobacco-related issues through their Tobacco Control Resource Council. The Resource Council has: (1) Developed a network of tobacco-control representatives representing the ten U.S. Public Health Service Regions, (2) conducted regular mailings and communications with State health officials, and (3) coordinated activities between Federal agencies and States.

Note: Public Law 104–65 states that an organization described in section 501(c)(4) of the Internal Revenue Code of 1986 that engages in lobbying activities is not eligible to receive Federal funds constituting an award, grant, cooperative agreement, contract, loan or any other form.

C. Availability of Funds

Approximately $350,000 is available in FY 2000 to fund this award. It is expected that the award will be made on or about July 1, 2000, and will be made for a 12-month budget period within a project period of up to 5 years. Funding estimates may change.

Continuation awards within the approved project period will be made on the basis of satisfactory progress as evidenced by required reports and the availability of funds.

D. Program Requirements

In conducting activities to achieve the purpose of this program, the recipient will be responsible for the activities under 1. (Recipient Activities), and CDC will be responsible for the activities under 2. (CDC Activities):

1. Recipient Activities

a. Advance comprehensive tobacco and chronic disease prevention and control programs.

(1) Promote and foster support for comprehensive tobacco and chronic disease prevention and control programs to raise tobacco and chronic disease prevention and control as a priority within ASTHO and among State health officials, affiliates, and other key partners.

(2) Identify and develop opportunities to promote successful State health department tobacco and chronic disease prevention and control efforts at ASTHO's regional and national meetings.

(3) Provide opportunities, in regional and national forums, where health officials and other key decisionmakers can discuss and develop policy positions on tobacco use and chronic disease prevention and control issues.

(4) Maintain liaison with the National Association of City and County Health Officials (NACCHO), the National Association of Local Boards of Health (NALBOH), and other national public health organizations interested in tobacco, chronic disease and health to encourage support for comprehensive tobacco and chronic disease prevention and control programs.

(5) Coordinate communication between the Tobacco Resource Council and ASTHO affiliates to foster communication between tobacco control program managers and affiliates regarding State tobacco control efforts. Disseminate state-based summaries of these efforts to SHOs, affiliates and other partners on a regular basis.

b. Identify and promote opportunities to educate State Health Officials and affiliate member leadership programs, as well as, guidelines and ''Best Practices'' for comprehensive tobacco control programs, as well as, about guidelines and recommendations related to chronic disease prevention and control. This could include use of state-of-the-art technologies such as distance-based learning, web-based information exchange forums, and skill building conferences/workshops.

c. Provide staff support to the ASTHO Tobacco Resource Council to facilitate information exchange and problem solving among tobacco control program managers in every region (10 U.S. Public Health Service Regions and the Pacific Islands).

d. Identify opportunities for ASTHO affiliates to work collaboratively with the Tobacco Resource Council to develop, support and/or implement comprehensive tobacco control programs.

e. Monitor the implementation of the ASTHO Policy on Tobacco Use Prevention and Control. Monitor current events and, as appropriate, share information with States and collaborating agencies. Before undertaking any data collection efforts, conduct an assessment of data available through other sources.

f. Maintain a mechanism (*e.g.*, website, e-mail updates, newsletter), for sharing timely information about tobacco-related issues with SHOs, State tobacco control contacts and affiliate membership. Provide links to websites that would be useful to ASTHO's constituents.

g. Develop an annual action plan and SMART (specific, measurable, achievable, realistic and time-phased) objectives. Develop a mechanism for evaluating overall effectiveness of the plan.

h. Provide a full-time staff person to coordinate and oversee the project.

2. CDC Activities

a. Provide consultation and technical assistance in the planning, implementation and evaluation of program activities.

b. Provide up-to-date information that includes diffusion of best practices and current research and data in the areas of tobacco use and chronic disease prevention and control.

c. Collaborate in the planning and support of workshops, conferences, and other professional gatherings that serve a public health purpose, and provide speakers for meetings that are national in scope.

d. Provide analytical expertise and assist in preparation of material for publication that includes information on State tobacco prevention and control activities.

e. Provide technical assistance to ASTHO and its affiliates regarding tobacco control and chronic disease programs and policies.

E. Application Content

Use the information in the Program Requirements, Other Requirements, and Evaluation Criteria section to develop the application content. Your application will be evaluated on the criteria listed, so it is important to follow them in laying out your program plan. The narrative should be no more than 50 pages double-spaced pages, printed on one side, with one inch margins, and unreduced font.

1. Provide a description of the tobacco and chronic disease prevention and control activities performed and the results achieved during the previous project period which started in fiscal year 1997.

2. Identify strategies and activities for increasing ASTHO's involvement in promoting and supporting comprehensive tobacco and chronic disease prevention and control programs over the next five years.

3. Describe how ASTHO's affiliate members will be involved with ASTHO's tobacco and chronic disease prevention and control activities.

4. Describe how the Tobacco Control Resource Council will facilitate communication between tobacco control managers and SHO's.

5. Provide an Annual Action Plan that includes objectives that are specific, measurable, achievable, relevant and time-phased. Objectives must relate to CDC's National Tobacco Control Program objectives (four goal areas) and the elements listed under the ''Recipient Activities'' section of this announcement.

6. Define and provide an operational plan for each activity necessary to achieve the objectives.

7. Provide an evaluation plan that clearly describes the methods proposed to evaluate each objective.

Measurements must be established to evaluate the level of achievement of all project objectives and elements listed under the ''Recipient Activities'' section of this announcement.

8. Provide an organizational chart highlighting line and staff authority. Include a description of the activities for each position.

9. Submit a detailed budget and line-item justification that is consistent with the purpose of the program and the proposed project objectives.

F. Submission and Deadline

Application

Submit the original and two copies of PHS 5161–1 (OMB 0937–0189). Forms are available at the following Internet address: http://www.cdc.gov/. Forms, or in the application kit. On or before June 23, 2000, submit the application to the Grants Management Specialist identified in the ''Where to Obtain Additional Information'' section of this announcement.

Deadline: Applications shall be considered as meeting the deadline if it is either:

(a) Received on or before the deadline date; or

(b) Sent on or before the deadline date and received in time for submission to the independent review group. (The applicants must request a legibly dated U.S. Postal Service postmark, or obtain a legibly dated receipt from a commercial carrier or U.S. Postal Service. Private metered postmarks shall not be acceptable as proof of timely mailing).

Late Application: The application which does not meet the criteria in (a) or (b) above is considered a late application, will not be considered, and will be returned to the applicant.

G. Evaluation Criteria (100 Points)

Each application will be evaluated individually against the following criteria by an independent review group appointed by CDC:

1. Five-year Vision (15 Percent)

The extent to which the applicant articulates its vision, seeks meaningful changes for a five year period, and ties the vision to the Healthy People 2010 Objectives.

2. Annual Action Plan (30 percent)

a. The extent to which the objectives are realistic and related to identified needs and purpose of the program.

b. The extent to which activities are realistic and feasible and will help accomplish the objectives.

c. The extent to which there are realistic plans to promote and foster support for comprehensive Tobacco Control Programs and chronic disease prevention and control programs to raise tobacco and chronic disease prevention and control as a priority within ASTHO and among State health officials, affiliates, and other key partners.

3. Project Management and Staffing Plan (30 Percent)

a. The extent to which the applicant identifies staff that have the responsibility, capability, and authority to carry out the activities, as evidenced by job descriptions, and curriculum vitae.

b. The extent to which the plan to manage the project and to overcome challenges is logical, resourceful, and adequate to accomplish the purpose of the project.

4. Evaluation (25 Percent)

The extent to which the applicant realistically and adequately proposes to measure progress in tracking and meeting objectives and presents a reasonable plan for obtaining data, reporting the results and using the results for programmatic decisions.

5. Budget and Accompanying Justification (Not Scored)

The extent to which the budget is reasonable, itemized, clearly justified and consistent with the work plan and intended use of funds.

H. Other Requirements

Technical Reporting Requirements

Provide CDC with the original plus two copies of:

1. Progress reports (semiannual)
2. Financial status report, no more than 90 days after the end of the budget period.
3. Final financial and performance reports, no more than 90 days after the end of the project period.

Send all reports to the Grants Management Specialist identified in the ''Where to Obtain Additional Information'' section of this announcement.

The following additional requirements are acceptable to this program. For a complete description of each, see Attachment I in the application kit.

AR–7—Executive Order 12372 Review
AR–9—Paperwork Reduction Act Requirements
AR–11—Health People 2010
AR–12—Lobbying Restrictions

I. Authority and Catalog of Federal Domestic Assistance Number

This program is authorized by Section 317(k)(2) [42 U.S.C. 247b(2)], Section 301 of the Public Health Service Act, as amended. The Catalog of Federal Domestic Assistance Number is 93.283.

J. Where To Obtain Additional Information

This and other CDC announcements can be found on the CDC Homepage Internet address: http://www.cdc.gov click on ''Funding'' then ''Grants and Cooperative Agreements.''

Business management technical assistance may be obtained from: Kimberly Pope, Grants Management Specialist, Grants Management Branch, Procurement and Grants Office, Centers for Disease Control and Prevention, Announcement Number 00087, 2920 Brandywine Road, Room 3000, Atlanta, GA 30341–4146, Telephone number: (770) 488–2767, FAX: (770) 488–2777, Email address: kgp6@cdc.gov

Program technical assistance may be obtained from: Barbara Park, Project Officer, Program Services Branch, Office on Smoking and Health, Centers for Disease Control and Prevention, 4770 Buford Hwy., NE, Telephone number: (770) 488–1249, FAX: (770) 488–1147, Email address: bzp@cdc.gov

Dated: May 24, 2000.

John L. Williams,

Director, Procurement and Grants Office, Centers for Disease Control and Prevention (CDC).

[FR Doc. 00–13647 Filed 5–31–00; 8:45 am]

BILLING CODE 4163–18–P

DEPARTMENT OF HEALTH AND HUMAN SERVICES

Centers for Disease Control and Prevention

Disease, Disability, and Injury Prevention and Control Special Emphasis Panel (SEP): Cooperative Agreements for Prevention Research Centers, Program Announcement 98047

In accordance with section 10(a)(2) of the Federal Advisory Committee Act (Pub. L. 92–463), the Centers for Disease Control and Prevention (CDC) announces the following meeting.

Name: Disease, Disability, and Injury Prevention and Control Special Emphasis Panel (SEP): Cooperative Agreements for Prevention Research Centers, Program Announcement #98047, meeting.

Times and Dates: 8:30 a.m.–9 a.m., July 11, 2000 (Open). 9 a.m.–5 p.m., July 11, 2000 (Closed). 8 a.m.–5 p.m., July 12, 2000 (Closed).

Place: Sheraton Colony Square Hotel, 188 14th St., NE, Atlanta, GA. Telephone 404/892–6000.

Status: Portions of the meeting will be closed to the public in accordance with provisions set forth in section 552b(c)(4) and (6), Title 5 U.S.C., and the Determination of the Associate Director for Management and Operations, CDC, pursuant to Public Law 92–463.

Matters To Be Discussed: The meeting will include the review, discussion, and evaluation of applications received in response to Program Announcement #98047.

Contact Person for More Information: David Elswick, Centers for Disease Control and Prevention, National Center for Chronic Disease Prevention and Health Promotion, 4770 Buford Highway m/s F30, Atlanta, GA., 30341. Telephone 770/488–5395, email dce1@cdc.gov.

The Director, Management Analysis and Services office has been delegated the authority to sign **Federal Register** notices pertaining to announcements of meetings and other committee management activities, for both the Centers for Disease Control and Prevention and the Agency for Toxic Substances and Disease Registry.

Dated: May 24, 2000.

Carolyn J. Russell,

Director, Management Analysis and Services Office, Centers for Disease Control and Prevention CDC.

[FR Doc. 00–13652 Filed 5–31–00; 8:45 am]

BILLING CODE 4163–18–P

DEPARTMENT OF HEALTH AND HUMAN SERVICES

Centers for Disease Control and Prevention

Disease, Disability, and Injury Prevention and Control Special Emphasis Panel (SEP): Childhood Agricultural Safety and Health Research, RFA–OH–00–001

In accordance with section 10(a)(2) of the Federal Advisory Committee Act (Pub. L. 92–463), the Centers for Disease Control and Prevention (CDC) announces the following meeting.

Name: Disease, Disability, and Injury Prevention and Control Special Emphasis Panel (SEP): Childhood Agricultural Safety and Health Research, RFA–OH–00–001.

Times and Dates: 12 p.m.–12:30 p.m., June 21, 2000 (Open). 12:30 a.m.–5 p.m., June 21, 2000 (Closed). 8 a.m.–5 p.m., June 22, 2000 (Closed).

Place: Embassy Suites, 1900 Diagonal Road, Alexandria, Virginia 22314.

Status: Portions of the meeting will be closed to the public in accordance with provisions set forth in section 552b(c)(4) and (6), Title 5 U.S.C., and the Determination of the Associate Director for Management and Operations, CDC, pursuant to Public Law 92–463.

Matters To Be Discussed: The meeting will include the review, discussion, and evaluation of applications received in response to RFA–OH–00–001.

Contact Person for More Information: Michael J. Galvin, Jr., Ph.D., National Institute for Occupational Safety and Health, CDC, 1600 Clifton Road, N.E., m/s D30 Atlanta, Georgia 30333. Telephone 404/639–3525, e-mail mtg3@cdc.gov.

The Director, Management Analysis and Services office has been delegated the authority to sign **Federal Register** notices pertaining to announcements of meetings and other committee management activities, for both the Centers for Disease Control and Prevention and the Agency for Toxic Substances and Disease Registry.

Dated: May 23, 2000.

Carolyn J. Russell,

Director, Management Analysis and Services Office, Centers for Disease Control and Prevention CDC.

[FR Doc. 00–13653 Filed 5–31–00; 8:45 am]

BILLING CODE 4163–19–P

DEPARTMENT OF HEALTH AND HUMAN SERVICES

Centers for Disease Control and Prevention

Disease, Disability and Injury Prevention and Control Special Emphasis Panel: The National Occupational Research Agenda (NORA), RFA OH–00–002, Intervention Effectiveness Research in Occupational Safety and Health

In accordance with section 10(a)(2) of the Federal Advisory Committee Act (Pub. L. 92–463), the Centers for Disease Control and Prevention (CDC) announces the following meeting.

Name: Disease, Disability and Injury Prevention and Control Special Emphasis Panel: The National Occupational Research Agenda (NORA), RFA OH–00–002, Intervention Effectiveness Research in Occupational Safety and Health.

Times and Date: 8 a.m.–8:30 a.m., June 20, 2000 (Open). 8:30 a.m.–5 p.m., June 20, 2000 (Closed).

Place: Embassy Suites Hotel, 1900 Diagonal Rd., Alexandria, VA 22134.

Status: Portions of the meeting will be closed to the public in accordance with provisions set forth in section 552b(c)(4) and (6), Title 5 U.S.C., and the Determination of the Associate Director for Management and Operations, CDC, pursuant to Public Law 92–463.

Matters To Be Discussed: The meeting will include the review, discussion, and evaluation of applications received in response to the NORA RFA OH–00–002.

Contact Person for More Information: Price Connor, Ph.D., National Institute for Occupational Safety and Health, CDC, 1600 Clifton Road, N.E., m/s D30 Atlanta, Georgia 30333. Telephone 404/639–2383, e-mail spc3@cdc.gov.

The Director, Management Analysis and Services Office, has been delegated the authority to sign **Federal Register** Notices pertaining to announcements of meetings and other committee management activities, for both the Centers for Disease Control and Prevention and the Agency for Toxic Substances+ and Disease Registry.

Dated: May 23, 2000.

Carolyn J. Russell,

Director, Management Analysis and Services Office, Centers for Disease Control and Prevention (CDC).

[FR Doc. 00–13654 Filed 5–31–00; 8:45 am]

BILLING CODE 4163–19–P

DEPARTMENT OF HEALTH AND HUMAN SERVICES

Food and Drug Administration

[Docket No. 00N–0002]

Agency Information Collection Activities; Announcement of OMB Approval; Application for Exemption From Federal Preemption of State and Local Medical Device Requirements

AGENCY: Food and Drug Administration, HHS.

ACTION: Notice.

SUMMARY: The Food and Drug Administration (FDA) is announcing that a collection of information entitled ''Application for Exemption From Federal Preemption of State and Local Medical Device Requirements'' has been approved by the Office of Management and Budget (OMB) under the Paperwork Reduction Act of 1995.

FOR FURTHER INFORMATION CONTACT: Peggy Schlosburg, Office of Information Resources Management (HFA–250), Food and Drug Administration, 5600 Fishers Lane, Rockville, MD 20857, 301–827–1223.

SUPPLEMENTARY INFORMATION: In the **Federal Register** of April 13, 2000 (65 FR 19915), the agency announced that the proposed information collection had been submitted to OMB for review and clearance under 44 U.S.C. 3507. An agency may not conduct or sponsor, and a person is not required to respond to, a collection of information unless it displays a currently valid OMB control number. OMB has now approved the information collection and has assigned OMB control number 0910–0129. The approval expires on May 31, 2003. A copy of the supporting statement for this information collection is available on the Internet at http://www.fda.gov/ohrms/dockets.

Dated: May 26, 2000.

William K. Hubbard,

Senior Associate Commissioner for Policy, Planning, and Legislation.

[FR Doc. 00–13742 Filed 5–31–00; 8:45 am]

BILLING CODE 4160–01–F

DEPARTMENT OF HEALTH AND HUMAN SERVICES

Food and Drug Administration

[Docket No. 99N–4933]

Agency Information Collection Activities; Announcement of OMB Approval; FDA Safety Alert/Public Health Advisory Readership Survey

AGENCY: Food and Drug Administration, HHS.

ACTION: Notice.

SUMMARY: The Food and Drug Administration (FDA) is announcing that a collection of information entitled ''FDA Safety Alert/Public Health Advisory Readership Survey'' has been approved by the Office of Management and Budget (OMB) under the Paperwork Reduction Act of 1995.

FOR FURTHER INFORMATION CONTACT: Peggy Schlosburg, Office of Information Resources Management (HFA–250), Food and Drug Administration, 5600 Fishers Lane, Rockville, MD 20857, 301–827–1223.

SUPPLEMENTARY INFORMATION: In the **Federal Register** of March 22, 2000 (65 FR 15345), the agency announced that the proposed information collection had been submitted to OMB for review and clearance under 44 U.S.C. 3507. An agency may not conduct or sponsor, and a person is not required to respond to, a collection of information unless it displays a currently valid OMB control number. OMB has now approved the information collection and has assigned OMB control number 0910–341. The approval expires on May 31, 2003. A copy of the supporting statement for this information collection is available on the Internet at http://www.fda.gov/ohrms/dockets.

Dated: May 26, 2000.

William K. Hubbard,

Senior Associate Commissioner for Policy, Planning, and Legislation.

[FR Doc. 00–13743 Filed 5–31–00; 8:45 am]

BILLING CODE 4160–01–F

DEPARTMENT OF HEALTH AND HUMAN SERVICES

Food and Drug Administration

[Docket No. 99N–5222]

Agency Information Collection Activities; Announcement of OMB Approval; Notice of a Claim for GRAS Exemption Based on a GRAS Determination

AGENCY: Food and Drug Administration, HHS.

ACTION: Notice.

SUMMARY: The Food and Drug Administration (FDA) is announcing that a collection of information entitled ''Notice of a Claim for GRAS Exemption Based on a GRAS Determination'' has been approved by the Office of Management and Budget (OMB) under the Paperwork Reduction Act of 1995.

FOR FURTHER INFORMATION CONTACT: Peggy Schlosburg, Office of Information Resources Management (HFA–250), Food and Drug Administration, 5600 Fishers Lane, Rockville, MD 20857, 301–827–1223.

SUPPLEMENTARY INFORMATION: In the **Federal Register** of March 31, 2000 (65 FR 17284), the agency announced that the proposed information collection had been submitted to OMB for review and clearance under 44 U.S.C. 3507. An agency may not conduct or sponsor, and a person is not required to respond to, a collection of information unless it displays a currently valid OMB control number. OMB has now approved the information collection and has assigned OMB control number 0910–0342. The approval expires on May 31, 2003. A copy of the supporting statement for this information collection is available on the Internet at http://www.fda.gov/ohrms/dockets.

Dated: May 26, 2000.

William K. Hubbard,

Senior Associate Commissioner for Policy, Planning, and Legislation.

[FR Doc. 00–13744 Filed 5–31–00; 8:45 am]

BILLING CODE 4160–01–F

DEPARTMENT OF HEALTH AND HUMAN SERVICES

Food and Drug Administration

Joint Meeting of the Nonprescription Drugs Advisory Committee and the Endocrinologic and Metabolic Drugs Advisory Committee; Notice of Meeting

AGENCY: Food and Drug Administration, HHS.

ACTION: Notice.

This notice announces a forthcoming meeting of a public advisory committee of the Food and Drug Administration (FDA). The meeting will be open to the public.

Name of Committees: Nonprescription Drugs Advisory Committee and the Endocrinologic and Metabolic Drugs Advisory Committee.

General Function of the Committees: To provide advice and recommendations to the agency on FDA's regulatory issues.

Date and Time: The meeting will be held on July 13 and 14, 2000, 8 a.m. to 5 p.m.

Location: Holiday Inn, Versailles Ballrooms I, II, III, and IV, 8120 Wisconsin Ave., Bethesda, MD.

Contact Person: Sandra L. Titus or Kathleen R. Reedy, Center for Drug Evaluation and Research (HFD–21), Food and Drug Administration, 5600 Fishers Lane, (for express delivery, 5630 Fishers Lane, rm. 1093), Rockville, MD 20857, 301–827–7001, or e-mail: Tituss@cder.fda.gov, or FDA Advisory Committee Information Line, 1–800–741–8138 (301–443–0572 in the Washington, DC area), code 12541. Please call the Information Line for up-to-date information on this meeting.

Agenda: On July 13 and 14, 2000, the committees will consider new drug applications (NDA) proposing over-the-counter (OTC) use of cholesterol lowering agents. On July 13, 2000, the committees will consider OTC availability of Mevacor®, NDA 21–213, (lovastatin, 10 milligrams (mg) tablets), Merck and Co., proposed to treat individuals with total cholesterol levels of 200–240 mg/dl (deciliter) and low density lipoprotein levels (LDL) over 130 mg/dl. The proposed indication is for men over 40 years of age and postmenopausal women who do not have established cardiovascular disease or diabetes. On July 14, 2000, the committees will consider OTC availability of Pravachol® NDA 21–198, (pravastatin sodium, 10 mg tablets), Bristol-Myers Squibb, proposed to treat individuals with total cholesterol levels of 200 and 240 mg/dl and LDL over 130 mg/dl. The proposed indication is for individuals who do not have established cardiovascular disease or diabetes.

Procedure: Interested persons may present data, information, or views, orally or in writing, on issues pending before the committee. Written submissions may be made to the contact person by July 6, 2000. Oral presentations from the public will be scheduled between approximately 8 a.m. to 9 a.m. on July 13, 2000. Time allotted for each presentation may be limited. Those desiring to make formal oral presentations should notify the contact person before July 6, 2000, and submit a brief statement of the general nature of the evidence or arguments they wish to present, the names and addresses of proposed participants, and an indication of the approximate time requested to make their presentation.

Notice of this meeting is given under the Federal Advisory Committee Act (5 U.S.C. app. 2).

Dated: May 17, 2000.

Linda A. Suydam,

Senior Associate Commissioner.

[FR Doc. 00–13741 Filed 5–31–00; 8:45 am]

BILLING CODE 4160–01–F

DEPARTMENT OF HEALTH AND HUMAN SERVICES

National Institutes of Health

National Cancer Institute; Notice of Meeting

Pursuant to section 10(a) of the Federal Advisory Committee Act, as amended (5 U.S.C. Appendix 2), notice is hereby given of a meeting of the National Cancer Institute Director's Consumer Liaison Group.

The meeting will be open to the public, with attendance limited to space available. Individuals who plan to attend and need special assistance, such as sign language interpretation or other reasonable accommodations, should notify the Contact Person listed below in advance of the meeting.

Name of Committee: National Cancer Institute Director's Consumer Liaison Group.

Date: June 1, 2000.

Time: 12 PM to 1 PM.

Agenda: To discuss topics raised at the DCLG April 17–18, 2000 meeting.

Place: NIH, Federal Building, 7550 Wisconsin Ave., Room 6C10, Bethesda, MD 20892–2580 (Telephone Conference Call).

Contact Person: Elaine Lee, Acting Executive Secretary, Office of Liaison Activities, National Cancer Institute, National Institutes of Health, Federal Building, Room 6C10, Bethesda, MD 20892–2580, (301) 594–3194.

This notice is being published less than 15 days prior to the meeting due to scheduling conflicts.

(Catalogue of Federal Domestic Assistance Program Nos. 93.392, Cancer Construction; 93.393, Cancer Cause and Prevention Research; 93.394, Cancer Detection and Diagnosis Research; 93.395, Cancer Treatment Research; 93.396, Cancer Biology Research; 93.397, Cancer Centers Support; 93.398, Cancer Research Manpower; 93.399, Cancer Control, National Institutes of Health, HHS)

Dated: May 23, 2000.

LaVerne Y. Stringfield,

Director, Office of Federal Advisory Committee Policy.

[FR Doc. 00–13722 Filed 5–31–00; 8:45 am]

BILLING CODE 4140–01–M

DEPARTMENT OF HEALTH AND HUMAN SERVICES

National Institutes of Health

National Cancer Institute; Notice of Closed Meeting

Pursuant to section 10(d) of the Federal Advisory Committee Act, as amended (5 U.S.C. Appendix 2), notice is hereby given of the following meeting.

The meeting will be closed to the public in accordance with the provisions set forth in sections 552b(c)(4) and 552b(c)(6), Title 5 U.S.C., as amended. The grant applications and the discussions could disclose confidential trade secrets or commercial property such as patentable material, and personal information concerning individuals associated with the grant

applications, the disclosure of which would constitute a clearly unwarranted invasion of personal privacy.

Name of Committee: National Cancer Institute Initial Review Group, Subcommittee F—Manpower & Training.

Date: June 14–16, 2000.

Time: 6:30 pm to 8 am.

Agenda: To review and evaluate grant applications.

Place: Holiday Inn—Georgetown, 2101 Wisconsin Avenue, N.W., Washington, DC 20007.

Contact Person: Mary Bell, Phd, Scientific Review Administrator, Grants Review Branch, Division of Extramural Activities, National Cancer Institute, National Institutes of Health, PHS, DHHS, 6116 Executive Boulevard, Room 8058, Bethesda, MD 20892, 301/496–7978.

This notice is being published less than 15 days prior to the meeting due to the timing limitations imposed by the review and funding cycle.

(Catalogue of Federal Domestic Assistance Program Nos. 93.392, Cancer Construction; 93.393, Cancer Cause and Prevention Research; 93.394, Cancer Detection and Diagnosis Research; 93.395, Cancer Treatment Research; 93.396, Cancer Biology Research; 93.397, Cancer Centers Support; 93.398, Cancer Research Manpower; 93.399, Cancer Control, National Institutes of Health, HHS)

Dated: May 23, 2000.

LaVerne Y. Stringfield,

Director, Office of Federal Advisory Committee Policy.

[FR Doc. 00–13727 Filed 5–31–00; 8:45 am]

BILLING CODE 4140–01–M

DEPARTMENT OF HEALTH AND HUMAN SERVICES

National Institutes of Health

National Center for Complementary & Alternative Medicine; Notice of Closed Meetings

Pursuant to section 10(d) of the Federal Advisory Committee, as amended (5 U.S.C. Appendix 2), notice is hereby given of the following meetings.

The meetings will be closed to the public in accordance with the provisions set forth in sections 552b(c)(4) and 552b(c)(6), Title 5 U.S.C., as amended. The grant applications and the discussions could disclose confidential trade secrets or commercial property such as patentable material, and personal information concerning individuals associated with the grant applications, the disclosure of which would constitute a clearly unwarranted invasion of personal privacy.

Name of Committee: National Center for Complementary and Alternative Medicine Special Emphasis Panel.

Date: July 11–12, 2000.

Time: 8:30 AM to 2 PM.

Agenda: To review and evaluate grant applications.

Place: Doubletree Hotel, 1750 Rockville Pike, Rockville, MD 10852.

Contact Person: John C. Chah, Scientific Review Administrator, National Institutes of Health, NCCAM, Building 31, Room 5B50, 9000 Rockville Pike, Bethesda, MD 20892, 301–402–4334, johnc@od.nih.gov.

Name of Committee: National Center for Complementary and Alternative Medicine Special Emphasis Panel.

Date: July 12–14, 2000.

Time: 8:30 AM to 4 PM.

Agenda: To review and evaluate grant applications.

Place: Doubletree Hotel, 1750 Rockville Pike, Rockville, MD 20852.

Contact Person: Sheryl K Brining, National Center for Complementary and Alternative Medicine, National Institutes of Health, 31 Center Drive, Room 5B50, Bethesda, MD 20892–2182, (301) 496–7498, sb44k@nih.gov.

Dated: May 25, 2000.

LaVerne Stringfield,

Director, Office of Federal Advisory Committee Policy.

[FR Doc. 00–13721 Filed 5–31–00; 8:45 am]

BILLING CODE 4140–01–M

DEPARTMENT OF HEALTH AND HUMAN SERVICES

National Institutes of Health

National Center for Research Resources; Notice of Closed Meeting

Pursuant to section 10(d) of the Federal Advisory Committee Act, as amended (5 U.S.C. Appendix 2), notice is hereby given of the following meeting.

The meeting will be closed to the public in accordance with the provisions set forth in sections 552b(c)(4) and 552b(c)(6), title 5 U.S.C., as amended. The grant applications and the discussions could disclose confidential trade secrets or commercial property such as patentable material, and personal information concerning individuals associated with the grant applications, the disclosure of which would constitute a clearly unwarranted invasion of personal privacy.

Name of Committee: Scientific and Technical Review Board on Biomedical and Behavioral Research Facilities.

Date: June 16, 2000.

Time: 2:00 pm to 4:30 pm.

Agenda: To review and evaluate grant applications.

Place: Office of Review, National Center for Research Resources, 6705 Rockledge Drive, Bethesda, MD 20892 (Telephone Conference Call).

Contact Person: D.G. Patel, Scientific Review Administrator, Office of Review, National Center for Research Resources, 6705 Rockledge Drive, MSC 7965, Room 6018, Bethesda, MD 20892–7965, 301–435–0824.

This notice is being published less than 15 days prior to the meeting due to the timing limitations imposed by the review and funding cycle.

(Catalogue of Federal Domestic Assistance Program Nos. 93.306, Comparative Medicine, 93.306; 93.333, Clinical Research, 93.333; 93.371, Biomedical Technology; 93.389, Research Infrastructure, National Institutes of Health, HHS)

Dated: May 23, 2000.

LaVerne Y. Stringfield,

Director, Office of Federal Advisory Committee Policy.

[FR Doc. 00–13730 Filed 5–31–00; 8:45 am]

BILLING CODE 4140–01–M

DEPARTMENT OF HEALTH AND HUMAN SERVICES

National Institutes of Health

National Human Genome Research Institute; Notice of Closed Meeting

Pursuant to section 10(d) of the Federal Advisory Committee Act, as amended (5 U.S.C. Appendix 2), notice is hereby given of the following meeting.

The meeting will be closed to the public in accordance with the provisions set forth in sections 552b(c)(4) and 552b(c)(6), Title 5 U.S.C., as amended. The grant applications and the discussions could disclose confidential trade secrets or commercial property such as patentable material, and personal information concerning individuals associated with the grant applications, the disclosure of which would constitute a clearly unwarranted invasion of personal privacy.

Name of Committee: National Human Genome Research Institute Special Emphasis Panel.

Date: July 5–6, 2000.

Time: July 5, 2000, 10:00 pm to Recess.

Agenda: To review and evaluate grant applications.

Place: The Hyatt Regency Hotel, 100 Bethesda Metro Center, Bethesda, MD 20814.

Time: July 6, 2000, 8:30 am to Adjournment.

Agenda: To review and evaluate grant applications.

Place: The Hyatt Regency Hotel, 100 Bethesda Metro Center, Bethesda, MD 20814.

Contact Person: Rudy O. Pozzatti, PhD, Scientific Review Administrator, Office of Scientific Review, National Human Genome Research Institute, National Institutes of Health, Bethesda, MD 20892, 301 402–0838.

(Catalogue of Federal Domestic Assistance Program Nos. 93. 172, Human Genome Research, National Institutes of Health, HHS)

Dated: May 25, 2000.

LaVerne Y. Stringfield,

Director, Office of Federal Advisory Committee Policy.

[FR Doc. 00–13714 Filed 5–31–00; 8:45 am]

BILLING CODE 4140–01–M

DEPARTMENT OF HEALTH AND HUMAN SERVICES

National Institutes of Health

National Human Genome Research Institute; Notice of Closed Meeting

Pursuant to section 10(d) of the Federal Advisory Committee Act, as amended (5 U.S.C. Appendix 2), notice is hereby given of the following meeting.

The meeting will be closed to the public in accordance with the provisions set forth in sections 552b(c)(4) and 552b(c)(6), Title 5 U.S.C., as amended. The grant applications and the discussions could disclose confidential trade secrets or commercial property such as patentable material, and personal information concerning individuals associated with the grant applications, the disclosure of which would constitute a clearly unwarranted invasion of personal privacy.

Name of Committee: National Human Genome Research Institute Initial Review Group Genome Research Review Committee.

Date: June 5, 2000.

Time: 8:30 AM to 5 PM.

Agenda: To review and evaluate grant applications.

Place: Holiday Inn Bethesda, 8120 Wisconsin Avenue, Bethesda, MD 20814.

Contact Person: Ken D. Nakamura, PHD, Scientific Review Administrator, Office of Scientific Review, National Human Genome Research Institute, National Institutes of Health, Bethesda, MD 20892, 301 402–0838.

This notice is being published less than 15 days prior to the meeting due to the timing limitations imposed by the review and funding cycle.

(Catalogue of Federal Domestic Assistance Program Nos. 93.172, Human Genome Research, National Institutes of Health, HHS)

Dated: May 25, 2000.

LaVerne Y. Stringfield,

Director, Office of Federal Advisory Committee Policy.

[FR Doc. 00–13718 Filed 5–31–00; 8:45 am]

BILLING CODE 4140–01–M

DEPARTMENT OF HEALTH AND HUMAN SERVICES

National Institutes of Health

National Institute of Mental Health; Notice of Closed Meetings

Pursuant to section 10(d) of the Federal Advisory Committee Act, as amended (5 U.S.C. Appendix 2), notice if hereby given of the following meetings.

The meetings will be closed to the public in accordance with the provisions set forth in sections 552b(c)(4) and 552b(c)(6), Title 5 U.S.C., as amended. The grant applications and the discussions could disclose confidential trade secrets or commercial property such as patentable material, and personal information concerning individuals associated with the grant applications, the disclosure of which would constitute a clearly unwarranted invasion of personal privacy.

Name of Committee: National Institute of Mental Health Special Emphasis Panel.

Date: June 16, 2000.

Time: 9:00 am to 4:00 pm.

Agenda: To review and evaluate grant applications.

Place: Neurosciences Center, 6001 Executive Boulevard, Bethesda, MD 20852.

Contact Person: Asikiya Walcourt, PhD, Scientific Review Administrator, Division of Extramural Activities, National Institute of Mental Health, NIH, 6001 Executive Boulevard, Room 6138, MSC 9606, Bethesda, MD 20892-9606, 301–443–6470.

This notice is being published less than 15 days prior to the meeting due to the timing limitations imposed by the review and funding cycle.

Name of Committee: National Institute of Mental Health Special Emphasis Panel.

Date: July 11–12, 2000.

Time: 8:00 am to 9:00 pm.

Agenda: To review and evaluate grant applications.

Place: Governor's House Hotel, 17th & Rhode Island Avenue, NW, Washington, DC 20036.

Contact Person: Houmam H. Araj, PhD, Scientific Review Administrator, Division of Extramural Activities, National Institute of Mental Health, NIH, 6001 Executive Blvd., Room 6150, MSC 9608, Bethesda, MD 20892–9608, 301–443–1340.

(Catalogue of Federal Domestic Assistance Program Nos. 93.242, Mental Health Research Grants; 93.281, Scientist Development Award, Scientist Development Award for Clinicians, and Research Scientist Award; 93.282, Mental Health National Research Service Awards for Research Training, National Institutes of Health, HHS)

Dated: May 25, 2000.

LaVerne Y. Stringfield,

Director, Office of Federal Advisory Committee Policy.

[FR Doc. 00–13715 Filed 5–31–00; 8:45 am]

BILLING CODE 4140–01–M

DEPARTMENT OF HEALTH AND HUMAN SERVICES

National Institutes of Health

National Institutes of Arthritis and Musculoskeletal and Skin Diseases; Notice of Closed Meeting

Pursuant to section 10(d) of the Federal Advisory Committee Act, as amended (5 U.S.C. Appendix 2), notice is hereby given of the following meeting.

The meeting will be closed to the public in accordance with the provisions set forth in section 552b(c)(4) and 552b(c)(6), Title 5 U.S.C., as amended. The grant applications and the discussions could disclose confidential trade secrets or commercial property such as patentable material, and personal information concerning individuals associated with the grant applications, the disclosure of which would constitute a clearly unwarranted invasion of personal privacy.

Name of Committee: National Institute of Arthritis and Musculoskeletal and Skin Diseases Special Emphasis Panel.

Date: July 12, 2000.

Time: 8:30 AM to 3 PM.

Agenda: To review and evaluate grant applications and/or proposals.

Place: Double Tree Hotel, 1750 Rockville Pike, Rockville, MD 20852.

Contact Person: Tommy L. Broadwater, PHD, Chief, Grants Review Branch, National Institutes of Health, NIAMS, Natcher Bldg., Room 5As25U, Bethesda, MD 20892, 301–594–4952.

(Catalogue of Federal Domestic Assistance Program Nos. 93.846, Arthritis, Muscuoskeletal and Skin Diseases Research, National Institutes of Health, HHS)

Dated: May 25, 2000.

LaVerne Y. Stringfield,

Director, Office of Federal Advisory Committee Policy.

[FR Doc. 00–13717 Filed 5–31–00; 8:45 am]

BILLING CODE 4140–01–M

DEPARTMENT OF HEALTH AND HUMAN SERVICES

National Institutes of Health

National Institute of Nursing Research; Notice of Closed Meeting

Pursuant to section 10(d) of the Federal Advisory Committee Act, as

amended (5 U.S.C. Appendix 2), notice is hereby given to the following meeting.

The meeting will be closed to the public in accordance with the provisions set forth in sections 552b(c)(4) and 552b(c)(6), Title 5 U.S.C., as amended. The grant applications and the discussions could disclose confidential trade secrets or commercial property such as patentable material, and personal information concerning individuals associated with the grant applications, the disclosure of which would constitute a clearly unwarranted invasion of personal privacy.

Name of Committee: National Institute of Nursing Research Special Emphasis Panel To review Individual National Research Service Award Applications.

Date: June 23, 2000.

Time: 1 PM to 4 PM.

Agenda: To review and evaluate grant applications.

Place: Building 45, Room 3AN–18B, MD 20892 (Telephone Conference Call).

Contact Person: Mary J. Stephens-Frazier, PHD, Scientific Review Administrator, National Institute of Nursing Research, National Institutes of Health, Natcher Building, Room 3AN32, Bethesda, MD 20892, (301) 594–5971.

(Catalogue of Federal Domestic Assistance Program Nos. 93.361, Nursing Research, National Institutes of Health, HHS)

Dated: May 25, 2000.

LaVerne Y. Stringfield,

Director, Office of Federal Advisory Committee Policy.

[FR Doc. 00–13719 Filed 5–31–00; 8:45 am]

BILLING CODE 4140–01–M

DEPARTMENT OF HEALTH AND HUMAN SERVICES

National Institutes of Health

National Institute of Neurological Disorders and Stroke; Notice of Closed Meetings

Pursuant to section 10(d) of the Federal Advisory Committee Act, as amended (5 U.S.C. Appendix 2), notice is hereby given of the following meetings.

The meetings will be closed to the public in accordance with the provisions set forth in sections 552b(c)(4) and 552b(c)(6), Title 5 U.S.C., as amended. The contract proposals and the discussions could disclose confidential trade secrets or commercial property such as patentable material, and personal information concerning individuals associated with the contract proposals, the disclosure of which would constitute a clearly unwarranted invasion of personal privacy.

Name of Committee: National Institute of Neurological Disorders and Stroke Special Emphasis Panel.

Date: June 1, 2000.

Time: 1 PM to 2 PM.

Agenda: To review and evaluate contract proposals.

Place: Neuroscience Center, National Institutes of Health, 6001 Executive Blvd., Bethesda, MD 20892, (Telephone Conference Call).

Contact Person: Phillip F. Wiethorn, Scientific Review Administrator, Scientific Review Branch, NINDS/NIH/DHHS, Neuroscience Center, 6001 Executive Blvd., Suite 3208, MSC 9529, Bethesda, MD 20892–9529, 301–496–9223.

This notice is being published less than 15 days prior to the meeting due to the timing limitations imposed by the review and funding cycle.

Name of Committee: National Institute of Neurological Disorders and Stroke Special Emphasis Panel.

Date: June 28, 2000.

Time: 1 PM to 3 PM.

Agenda: To review and evaluate contract proposals.

Place: Neuroscience Center, National Institutes of Health, 6001 Executive Blvd., Bethesda, MD 20892, (Telephone Conference Call).

Contact Person: Phillip F. Wiethorn, Scientific Review Administrator, Scientific Review Branch, NINDS/NIH/DHHS, Neuroscience Center, 6001 Executive Blvd., Suite 3208, MSC 9529, Bethesda, MD 20892–9529, 301–496–9223.

(Catalogue of Federal Domestic Assistance Program Nos. 93.853, Clinical Research Related to Neurological Disorders; 93.854, Biological Basis Research in the Neurosciences, National Institutes of Health, HHS)

Dated: May 25, 2000.

LaVerne Y. Stringfield,

Director, Office of Federal Advisory Committee Policy.

[FR Doc. 00–13720 Filed 5–31–00; 8:45 am]

BILLING CODE 4140–01–M

DEPARTMENT OF HEALTH AND HUMAN SERVICES

National Institutes of Health

National Institute on Drug Abuse; Notice of Closed Meeting

Pursuant to section 10(d) of the Federal Advisory Committee Act, as amended (5 U.S.C. Appendix 2), notice is hereby given of the following meeting.

The meeting will be closed to the public in accordance with the provisions set forth in sections 552b(c)(4) and 552b(c)(6), Title 5 U.S.C., as amended. The grant applications and the discussions could disclose confidential trade secrets or commercial property such as patentable material, and personal information concerning individuals associated with the grant applications, the disclosure of which would constitute a clearly unwarranted invasion of personal privacy.

Name of Committee: National Institute on Drug Abuse Special Emphasis Panel, Viral Hepatitis and HIV in Drug and Alcohol Users.

Date: July 27, 2000.

Time: 9:00 am to 6:00 pm.

Agenda: To review and evaluate grant applications.

Place: Radisson Barcelo Hotel, 2121 P Street NW, Washington, DC 20037.

Contact Person: Kesinee Nimit, MD, Health Scientist Administrator, Office of Extramural Affairs, National Institute on Drug Abuse, National Institutes of Health, DHHS, 6001 Executive Boulevard, Room 3158, MSC 9547, Bethesda, MD 20892–9547, (301) 435–1432.

(Catalogue of Federal Domestic Assistance Program Nos. 93.277, Drug Abuse Scientist Development Award for Clinicians, Scientist Development Awards, and Research Scientist Awards, 93.278, Drug Abuse National Research Service Awards for Research Training; 93.279, Drug Abuse Research Programs, National Institutes of Health, HHS).

Dated: May 24, 2000.

LaVerne Y. Stringfield,

Director, Office of Federal Advisory Committee Policy.

[FR Doc. 00–13725 Filed 5–31–00; 8:45 am]

BILLING CODE 4140–01–M

DEPARTMENT OF HEALTH AND HUMAN SERVICES

National Institutes of Health

National Institute on Aging; Notice of Closed Meetings

Pursuant to section 10(d) of the Federal Advisory Committee Act, as amended (5 U.S.C. Appendix 2), notice is hereby given of the following meetings.

The meetings will be closed to the public in accordance with the provisions set forth in sections 552b(c)(4) and 552b(c)(6), Title 5 U.S.C., as amended. The grant applications and the discussions could disclose confidential trade secrets or commercial property such as patentable material, and personal information concerning individuals associated with the grant applications, the disclosure of which would constitute a clearly unwarranted invasion of personal privacy.

Name of Committee: National Institute on Aging Specil Emphasis Panel, Molecular Mechanisms of Signaling in Aging and AD.

Date: May 31–June 1, 2000.

Time: 7:00 pm to 4:30 pm.

Agenda: To review and evaluate grant applications.

Place: Radisson Hotel, 808 20th Street, South Birmingham, AL.

Contact Person: Louise L. Hsu, PhD, The Bethesda Gateway Building, 7201 Wisconsin Avenue/Suite 2C212, Bethesda, MD 20892, (301) 496–9666.

This notice is being published less than 15 days prior to the meeting due to the timing limitations imposed by the review and funding cycle.

Name of Committee: National Institute on Aging Special Emphasis Panel, The Mechanisms of Alternations of Sleep with Age.

Date: June 28, 2000.

Time: 2:00 pm to 5:00 pm.

Agenda: To review and evaluate grant applications.

Place: 7201 Wisconsin, Suite 502C, Bethesda, MD 20892, (Telephone Conference Call).

Contact Person: Jeffrey M. Chernak, PhD, The Bethesda Gateway Building, 7201 Wisconsin Avenue/Suite 2C212, Bethesda, MD 20892, (301) 496–9666.

(Catalogue of Federal Domestic Assistance Program Nos. 93.866, Aging Research, National Institutes of Health, HHS)

Dated: May 24, 2000.

LaVerne Y. Stringfield,

Director, Office of Federal Advisory Committee Policy.

[FR Doc. 00–13726 Filed 5–31–00; 8:45 am]

BILLING CODE 4140–01–M

DEPARTMENT OF HEALTH AND HUMAN SERVICES

National Institutes of Health

National Institute on Alcohol Abuse and Alcoholism; Notice of Closed Meeting

Pursuant to section 10(d) of the Federal Advisory Committee Act, as amended (5 U.S.C. appendix 2), notice is hereby given of the following meeting.

The meeting will be closed to the public in accordance with the provisions set forth in sections 552b(c)(4) and 552b(c)(6), Title 5 U.S.C., as amended. The grant applications and the discussions could disclose confidential trade secrets or commercial property such as patentable material, and personal information concerning individuals associated with the grant applications, the disclosure of which would constitute a clearly unwarranted invasion of personal privacy.

Name of Committee: National Institute on Alcohol Abuse and Alcoholism Special Emphasis Panel.

Date: June 9, 2000.

Time: 8 a.m. to 5 p.m.

Agenda: To review and evaluate grant applications.

Place: Georgetown Holiday Inn, 2101 Wisconsin Ave, NW, Washington, DC 20007.

Contact Person: Sean O'Rourke, Scientific Review Administrator, Extramural Project Review Branch, National Institute on Alcohol Abuse and Alcoholism, National Institutes of Health, Suite 409, 6000 Executive Boulevard, Bethesda, MD 20892–7003, 301–443–2861.

This notice is being published less than 15 days prior to the meeting due to the timing limitations imposed by the review and funding cycle.

(Catalogue of Federal Domestic Assistance Program Nos. 93.271, Alcohol Research Career Development Awards for Scientists and Clinicians; 93.272, Alcohol National Research Service Awards for Research Training; 93.273, Alcohol Research Programs; 93.891, Alcohol Research Center Grants, National Institutes of Health, HHS)

Dated: May 23, 2000.

LaVerne Y. Stringfield,

Director, Office of Federal Advisory Committee Policy.

[FR Doc. 00–13728 Filed 5–31–00; 8:45 am]

BILLING CODE 4140–01–M

DEPARTMENT OF HEALTH AND HUMAN SERVICES

National Institutes of Health

National Institute of Mental Health; Notice of Closed Meetings

Pursuant to section 10(b) of the Federal Advisory Committee Act, as amended (5 U.S.C. Appendix 2), notice is hereby given of the following meetings.

The meetings will be closed to the public in accordance with the provisions set forth in sections 552b(c)(4) and 552b(c)(6), Title 5 U.S.C., as amended. The grant applications and the discussions could disclose confidential trade secrets or commercial property such as patentable material, and personal information concerning individuals associated with the grant applications, the disclosure of which would constitute a clearly unwarranted invasion of personal privacy.

Name of Committee: National Institute of Mental Health Special Emphasis Panel.

Date: June 22, 2000.

Time: 10 a.m. to 11 a.m.

Agenda: To review and evaluate grant applications.

Place: Neuroscience Center, National Institutes of Health, 6001 Executive Blvd., Bethesda, MD 20892, (Telephone Conference Call).

Contact Person: Henry J. Haigler, Scientific Review Administrator, Division of Extramural Activities, National Institute of Mental Health, NIH, Neuroscience Center, 6001 Executive Blvd., Rm. 6150, MSC 9608, Bethesda, MD 20892–9608, 301/443–7216.

Name of Committee: National Institute of Mental Health Special Emphasis Panel.

Date: July 24, 2000.

Time: 2 a.m. to 3:30 p.m.

Agenda: To review and evaluate grant applications.

Place: Neuroscience Center, National Institutes of Health, 6001 Executive Blvd., Bethesda, MD 20892, (Telephone Conference Call).

Contact Person: Henry J. Haigler, Scientific Review Administrator, Division of Extramural Activities, National Institute of Mental Health, NIH, Neuroscience Center, 6001 Executive Blvd., Rm. 6150, MSC 9608, Bethesda, MD 20892–9608, 301/443–7216.

(Catalogue of Federal Domestic Assistance Program Nos. 93.242, Mental Health Research Grants; 93.281, Scientist Development Award, Scientist Development Award for Clinicians, and Research Scientist Award; 93.282, Mental Health National Research Service Awards for Research Training, National Institutes of Health, HHS)

Dated: May 23, 2000.

LaVerne Y. Stringfield,

Director, Office of Federal Advisory Committee Policy.

[FR Doc. 00–13729 Filed 5–31–00; 8:45 am]

BILLING CODE 4140–01–M

DEPARTMENT OF HEALTH AND HUMAN SERVICES

National Institutes of Health

National Library of Medicine; Notice of Closed Meeting

Pursuant to section 10(d) of the Federal Advisory Committee Act, as amended (5 U.S.C. Appendix 2), notice is hereby given of the following meeting.

The meeting will be closed to the public in accordance with the provisions set forth in sections 552b(c)(4) and 552b(c)(6), Title 5 U.S.C., as amended. The grant applications and the discussions could disclose confidential trade secrets or commercial property such as patentable material, and personal information concerning individuals associated with the grant applications, the disclosure of which would constitute a clearly unwarranted invasion of personal privacy.

Name of Committee: National Library of Medicine Special Emphasis Panel, Ledley SEP.

Date: June 14–15, 2000.

Time: June 14, 2000, 6:30 pm to 9:30 pm.

Agenda: To review and evaluate grant applications.

Place: Embassy Suites Hotel, The Chevy Chase Pavilion, 4300 Military Road NW, Wisconsin at Western Avenue, Washington, DC 20015.

Time: June 15, 2000, 8:30 am to 5 pm.

Agenda: To review and evaluate grant applications.

Place: Embassy Suites Hotel, The Chevy Chase Pavilion, 4300 Military Road NW, Wisconsin at Western Avenue, Washington, DC 20015.

Contact Person: Sharee Pepper, PhD, Scientific Review Administrator, Health Scientist Administrator, Office of Extramural Programs, National Library of Medicine, 6705 Rockledge Drive Suite 301, Bethesda, MD 20892, (301) 594–4933.

(Catalogue of Federal Domestic Assistance Program Nos. 93.879, Medical Library Assistance, National Institutes of Health, HHS)

Dated: May 25, 2000.

LaVerne Y. Stringfield,

Director, Office of Federal Advisory Committee Policy.

[FR Doc. 00–13716 Filed 5–31–00; 8:45 am]

BILLING CODE 4140–01–M

DEPARTMENT OF HEALTH AND HUMAN SERVICES

National Institutes of Health

National Library of Medicine; Notice of Meeting

Pursuant to section 10(d) of the Federal Advisory Committee Act, as amended (5 U.S.C. Appendix 2), notice is hereby given of the following meeting.

The meeting will be open to the public as indicated below, with attendance limited to space available. Individuals who plan to attend and need special assistance, such as sign language interpretation or other reasonable accommodations, should notify the Contact Person listed below in advance of the meeting.

The portions of the meeting devoted to the review and evaluation of journals for potential indexing by the National Library of Medicine will be closed to the public in accordance with the provisions set forth in section 552b(c)(9)(B), Title 5 U.S.C., as amended. Premature disclosure of the titles of the journals as potential titles to be indexed by the National Library of Medicine, the discussions, and the presence of individuals associated with these publications could significantly frustrate the review and evaluation of individual journals.

Name of Committee: Literature Selection Technical Review Committee.

Date: June 8–9, 2000.

Open: June 8, 2000, 9 am to 10:30 am.

Agenda: Administration reports and program developments.

Place: National Library of Medicine, 8600 Rockville Pike, Board Room, Bethesda, MD 20894.

Closed: June 8, 2000, 10:30 am to 5 pm.

Agenda: To review and evaluate journals as potential titles to be indexed by the National Library of Medicine.

This notice is being published less than 15 days prior to the meeting due to the timing limitations imposed by the review and funding cycle.

Place: National Library of Medicine, 8600 Rockville Pike, Board Room Bldg 38, Rm 2E–09, Bethesda, MD 20894.

Closed: June 9, 2000, 8:30 am to 12:30 pm.

Agenda: To review and evaluate journals as potential titles to be indexed by the National Library of Medicine.

Place: National Library of Medicine, 8600 Rockville Pike, Board Room, Bethesda, MD 20894.

Contact Person: Sheldon Kotzin, BA, Chief, Bibliographic Services Division, Division of Library Operations, National Library of Medicine, 8600 Rockville Pike, Bldg 38A.Room 4N419, Bethesda, MD 20894.

(Catalogue of Federal Domestic Assistance Program No. 93.879, Medical Library Assistance, National Institutes of Health, HHS)

Dated: May 24, 2000.

LaVerne Y. Stringfield,

Director, Office of Federal Advisory Committee Policy, NIH.

[FR Doc. 00–13724 Filed 5–31–00; 8:45 am]

BILLING CODE 4140–01–M

DEPARTMENT OF HEALTH AND HUMAN SERVICES

National Institutes of Health

Center for Scientific Review; Notice of Closed Meetings

Pursuant to section 10(d) of the Federal Advisory Committee Act, as amended (5 U.S.C. Appendix 2), notice is hereby given of the following meetings.

The meetings will be closed to the public in accordance with the provisions set forth in sections 552b(c)(4) and 5452b(c)(6), Title 5 U.S.C., as amended. The grant applications and the discussions could disclose confidential trade secrets or commercial property such as patentable material, and personal information concerning individuals associated with the grant applications, the disclosure of which would constitute a clearly unwarranted invasion of personal privacy.

Name of Committee: Pathophysiological Sciences Integrated Review Group, General Medicine A Subcommittee 2.

Date: June 12–13, 2000.

Time: 8:00 a.m. to 6:00 p.m.

Agenda: To review and evaluate grant applications.

Place: The Washington Monarch Hotel, 2401 M Street NW, Washington, DC 20037.

Contact Person: Mushtaq A. Khan, DVM, PhD, Scientific Review Administrator, Center of Scientific Review, National Institutes of Health, 6701 Rockledge Drive, Room 2176, MSC 7818, Bethesda, MD 20892, 301–435–1778, Khanm@csr.nih.gov

This notice is being published less than 15 days prior to the meeting due to the timing limitations imposed by the review and funding cycle.

Name of Committee: Endocrinology and Reproductive Sciences Integrated Review Group Reproductive Endocrinology Study Section.

Date: June 12–13, 2000.

Time: 8:00 a.m. to 3:00 p.m.

Agenda: To review and evaluate grant applications.

Place: Gaithersburg Hilton, 620 Perry Parkway Gaithersburg, MD 20877.

Contact Person: Abubaker A. Shaikh, DVM, PhD, Scientific Review Administrator, Center of Scientific Review, National Institutes of Health, 6701 Rockledge Drive, Room 6166, MSC 7892, Bethesda, MD 20892, (301) 435–1042.

This notice is being published less than 15 days prior to the meeting due to the timing limitations imposed by the review and funding cycle.

Name of Committee: Musculoskeletal and Dental Sciences Integrated Review Group, General Medicine A Subcommittee 1.

Date: June 12–13, 2000.

Time: 8:00 a.m. to 4:00 p.m.

Agenda: To review and evaluate grant applications.

Place: Wyndham Bristol Hotel, 2430 Pennsylvania Ave, NW, Washington, DC 20037.

Contact Person: Harold M. Davidson, PhD, Scientific Review Administrator, Center for Scientific Review, National Institutes of Health 6701 Rockledge Drive, Room 4216, MSC 7814, Bethesda, MD 20892, (301) 435–1776, davidsoh@csr.nih.gov

This notice if being published less than 15 days prior to the meeting due to the timing limitations imposed by the review and funding cycle.

Name of Committee: Integrative, Functional and Cognitive Neuroscience Integrated Review Group Alcohol and Toxicology Subcommittee 3.

Date: June 12–13, 2000.

Time: 8:00 a.m. to 4:00 p.m.

Agenda: To review and evaluate grant applications.

Place: The Washington Monarch Hotel, 2401 M Street NW, Washington, DC 20037.

Contact Person: Christine Melchior, PhD, Scientific Review Administrator, Center of Scientific Review, National Institutes of Health, 6701 Rockledge Drive, Room 4102, MSC 7816, Bethesda, MD 20892.

This notice is being published less than 15 days prior to the meeting due to the timing limitations imposed by the review and funding cycle.

Name of Committee: Musculoskeletal and Dental Sciences Integrated Review Group Oral Biology and Medicine Subcommittee 2.

Date: June 12–13, 2000.

Time: 8:00 a.m. to 5:00 p.m.

Agenda: To review and evaluate grant applications.

Place: Holiday Inn Old Town Alexandria, 480 King Street, Alexandria, VA 22314.

Contact Person: Priscilla Chen, PhD, Scientific Review Administrator, Center for Scientific Review, National Institutes of Health, 6701 Rockledge Drive, Room 4104, MSC 7814, Bethesda, MD 20892, (301) 435–1787.

This notice is being published less than 15 days prior to the meeting due to the timing limitations imposed by the review and funding cycle.

Name of Committee: Endocrinology and Reproductive Sciences Integrated Review Group Biochemical Endocrinology Study Section.

Date: June 12, 2000.

Time: 8:00 a.m. to 6:00 p.m.

Agenda: To review and evaluate grant applications.

Place: Embassy Suites, Chevy Chase Pavilion, 4300 Military Rd, Wisconsin at Western Ave., Washington, DC 20015.

Contact Person: Michael Knecht, PhD, Scientific Review Administrator, Center for Scientific Review, National Institutes of Health, 6701 Rockledge Drive, Room 6176, MSC 7892, Bethesda, MD 20892, (301) 435–1046.

This notice is being published less than 15 days prior to the meeting due to the timing limitations imposed by the review and funding cycle.

Name of Committee: Surgery, Radiology and Bioengineering Integrated Review Group Diagnostic Imaging Study Section.

Date: June 12–13, 2000.

Time: 8:00 a.m. to 4:00 p.m.

Agenda: To review and evaluate grant applications.

Place: Holiday Inn Georgetown, 2101 Wisconsin Avenue, NW, Washington, DC 20007.

Contact Person: Lee Rosen, PhD, Scientific Review Administrator, Center for Scientific Review, National Institutes of Health, 6701 Rockledge Drive, Room 5116, MSC 7854, Bethesda, MD 20892, (301) 435–1171.

This notice is being published less than 15 days prior to the meeting due to the timing limitations imposed by the review and funding cycle.

Name of Committee: Center for Scientific Review Special Emphasis Panel.

Date: June 12, 2000.

Time: 9 a.m. to 4 p.m.

Agenda: To review and evaluate grant applications.

Place: Georgetown Suites, 1111 30th Street, NW, Washington, DC 20007.

Contact Person: Anita Miller Sostek, PhD, Scientific Review Administrator, Center for Scientific Review, National Institutes of Health, 6701 Rocklege Drive, Room 3176, MSC 7848, Bethesda, MD 20892, (301) 435–1260.

This notice is being published less than 15 days prior to the meeting due to the timing limitations imposed by the review and funding cycle.

Name of Committee: Genetic Sciences Integrated Review Group Mammalian Genetics Study Section.

Date: June 12–13, 2000.

Time: 9 a.m. to 3 p.m.

Agenda: Grant applications.

Place: The Governor's House Hotel, 1615 Rhode Island Avenue, NW, Washington, DC 20036.

Contact Person: Camilla Day, PhD, Scientific Review Administrator, Center for Scientific Review, National Institutes of Health, 6701 Rockledge Drive, Room 2208, MSC 7890, Bethesda, MD 20892, (301) 435–1037, dayc@drg.nih.gov

This notice is being published less than 15 days prior to the meeting due to the timing limitations imposed by the review and funding cycle.

Name of Committee: Center for Scientific Review Special Emphasis Panel.

Date: June 12, 2000.

Time: 4 p.m. to 5 p.m.

Agenda: To review and evaluate grant applications.

Place: Georgetown Suites, 1111 30th Street, NW, Washington, DC 20007.

Contact Person: Anita Miller Sostek, PhD, Scientific Review Administrator, Center for Scientific Review, National Institutes of Health, 6701 Rockledge Drive, Room 3176, MSC 7848, Bethesda, MD 20892, (301) 435–1260.

This notice is being published less than 15 days prior to the meeting due to the timing limitations imposed by the review and funding cycle.

Name of Committee: Center for Scientific Review Special Emphasis Panel.

Date: June 12–13, 2000.

Time: 7:30 a.m. to 5 p.m.

Agenda: To review and evaluate grant applications.

Place: Holiday Inn, 5520 Wisconsin Ave, Chevy Chase, MD 20815.

Contact Person: Richard Marcus, PhD, Scientific Review Administrator, Center for Scientific Review, National Institutes of Health, 6701 Rockledge Drive, Room 5168, MSC 7844, Bethesda, MD 20892, (301)–435–1245, richard.marcus@nih.gov

This notice is being published less than 15 days prior to the meeting due to the timing limitatons imposed by the review and funding cycle.

Name of Committee: Pathophysiological Sciences Integrated Review Group Alcohol and Toxicology Subcommittee 1.

Date: June 13–14, 2000.

Time: 8 a.m. to 6 p.m.

Agenda: To review and evaluate grant applications.

Place: River Inn, 924 25th Street, NW, Washington, DC 20037.

Contact Person: Russell T. Dowell, PhD, Scientific Review Administrator, Center for Scientific Review, National Institutes of Health, 6701 Rockledge Drive, Room 2180, MSC 7818, Bethesda, MD 20892, (301) 435–1169, dowellr@csr.nih.gov

Name of Committee: Center for Scientific Review Special Emphasis Panel.

Date: June 13–14, 2000.

Time: 8 a.m. to 5 p.m.

Agenda: To review and evaluate grant applications.

Place: The Doyle Hotel, 1500 New Hampshire Avenue, NW, Washington, DC 20036.

Contact Person: Joanne T. Fujii, PhD, Scientific Review Administrator, Center for Scientific Review, National Institutes of Health, 6701 Rockledge Drive, Room 5218, Bethesda, MD 20892, (301)435–1178, fujiij@drg.nih.gov

Name of Committee: Surgery, Radiology and Bioengineering Integrated Review Group Diagnostic Radiology Study Section.

Date: June 13–14, 2000.

Time: 8 a.m. to 5 p.m.

Agenda: To review and evaluate grant applications.

Place: Georgetown Holiday Inn, 2101 Wisconsin Avenue, NW, Washington, DC 20007.

Contact Person: Eileen W. Bradley, DSC, Scientific Review Administrator, Center for Scientific Review, National Institutes of Health, 6701 Rockledge Drive, Room 5120, MSC 7854, Bethesda, MD 20892, (301) 435–1179, bradleye@csr.nih.gov

Name of Committee: Infectious Diseases and Microbiology Integrated Review Group Virology Study Section.

Date: June 13–14, 2000.

Time: 8:30 a.m. to 5 p.m.

Agenda: To review and evaluate grant applications.

Place: Georgetown Suites, 1111 30th Street, NW, Washington, DC 20007.

Contact Person: Rita Anand, PhD, Scientific Review Administrator, Center for Scientific Review, National Institutes of Health, 6701 Rockledge Drive, Room 4188, MSC 7808, Bethesda, MD 20892, (301) 435–1151.

Name of Committee: Cell Development and Function Integrated Review Group Cell Development and Function 3.

Date: June 13–14, 2000.

Time: 8:30 a.m. to 4 p.m.

Agenda: To review and evaluate grant applications.

Place: Holiday Inn, 8120 Wisconsin Avenue, Bethesda, MD 20814.

Contact Person: Gerhard Ehrenspeck, PhD, Scientific Review Administrator, Center for Scientific Review, National Institutes of Health, 6701 Rockledge Drive, Room 5138, MSC 7840, Bethesda, MD 20892, (301) 435–1022, ehrenspeckg@nih.csr.gov

Name of Committee: Center for Scientific Review Special Emphasis Panel.

Date: June 13, 2000.

Time: 12:00 p.m. to 1:00 p.m.

Agenda: To review and evaluate grant applications.

Place: Georgetown Holiday Inn, 2101 Wisconsin Avenue, NW, Washington, DC 20007.

Contact Person: Lee Rosen, PhD, Scientific Review Administator, Center for Scientific Review, National Institutes of Health, 6701 Rockledge Drive, Room 5116, MSC 7854, Bethesda, MD 20892, (301) 435–1171.

Name of Committee: Center for Scientific Review Special Emphasis Panel.

Date: June 13, 2000.

Time: 12:00 p.m. to 1:00 p.m.

Agenda: To review and evaluate grant applications.

Place: The Governor's House Hotel, 1615 Rhode Island Avenue, N.W., Washington, DC 20036.

Contact Person: Camilla E. Day, PhD, Scientific Review Administrator, Center for Scientific Review, National Institutes of Health, 6701 Rockledge Drive, Room 2208, MSC 7890, Bethesda, MD 20892, (301) 435–1037, dayc@csr.hih.gov

Name of Committee: Center for Scientific Review Special Emphasis Panel.

Date: June 13, 2000.

Time: 12:00 p.m. to 1:00 p.m.
Agenda: To review and evaluate grant applications.
Place: Georgetown Holiday Inn, 2101 Wisconsin Avenue, NW, Washington, DC 20007.
Contact Person: Eileen W. Bradley, DSC, Scientific Review Administrator, Center for Scientific Review, National Institutes of Health, 6701 Rockledge Drive, Room 5120, MSC 7854, Bethesda, MD 20892, (301) 435–1179, bradleye@csr.nih.gov

Name of Committee: Oncological Sciences Integrated Review Group Chemical Pathology Study Section.
Date: June 14–16, 2000.
Time: 8:30 a.m. to 5:30 p.m.
Agenda: To review and evaluate grant applications.
Place: Arlington Hyatt, 1325 Wilson Boulevard, Arlington, VA 22209.
Contact Person: Syed Quadri, PhD, Scientific Review Administrator, Center for Scientific Review, National Institutes of Health, 6701 Rockledge Drive, Room 4144, MSC 7804, Bethesda, MD 20892, (301) 435–1211.

Name of Committee: Integrative, Functional and Cognitive Neuroscience Integrated Review Group Visual Sciences B Study Section.
Date: June 14–15, 2000.
Time: 8:30 a.m. to 4:00 p.m.
Agenda: To review and evaluate grant applications.
Place: Wyndham City Center, 1143 New Hampshire Avenue, NW, Washington, DC 20037.
Contact Person: Leonard Jakubczak, PhD, Scientific Review Administrator, Center for Scientific Review, National Institutes of Health, 6701 Rockledge Drive, Room 5172, MSC 7844, Bethesda, MD 20892, Bethesda, MD 20892, (301) 435–1247.

Name of Committee: Immunological Sciences Integrated Review Group Immunobiology Study Section.
Date: June 14–15, 2000.
Time: 9:00 a.m. to 3:00 p.m.
Agenda: To review and evaluate grant applications.
Place: Holiday Inn Chevy Chase, 5520 Wisconsin Avenue, Chevy Chase, MD 20815.
Contact Person: Betty Hayden, PhD, Scientific Review Administrator, Center for Scientific, National Institutes of Health, 6701 Rockledge Drive, Room 4206, MSC 7812, Bethesda, MD 20892, (301) 435–1223.

Name of Committee: Center for Scientific Review Special Emphasis Panel.
Date: June 14–16, 2000.
Time: 7:00 p.m. to 11:00 p.m.
Agenda: To review and evaluate grant applications.
Place: Hampton Inn, North, 2300 Green Road, Ann Arbor, MI 48105.
Contact Person: Nadarajen A. Vydelingum, PhD, Scientific Review Administrator, Special Study Section–8, Center for Scientific Review, National Institutes of Health, 6701 Rockledge Drive, MSC 7854, Rm 5122, Bethesda, MD 20892, (301) 435–1176, vydelinn@csr.nih.gov

Name of Committee: Center for Scientific Review Special Emphasis Panel.
Date: June 14, 2000.
Time: 7:00 p.m. to 10:00 p.m.
Agenda: To review and evaluate grant applications.
Place: Double Tree Hotel, 1750 Rockville Pike, Rockville, MD 20852.
Contact Person: Alec S. Liacouras, PhD, Scientific Review Administrator, Center for Scientific Review, National Institutes of Health, 6701 Rockledge Drive, Room 5154, MSC 7842, Bethesda, MD 20892, (301) 435–1740.

(Catalogue of Federal Domestic Assistance Program nos. 93.,306, Comparative Medicine, 93.306; 93.333, Clinical Research, 93.333, 93.337, 93.393–93.396, 93.837–93.844, 93.846–93.878, 93.892, 93.893, National Institutes of Health, HHS)

Dated: May 24, 2000.

LaVerne Y. Stringfield,

Director, Office of Federal Advisory Committee Policy.

[FR Doc. 00–13723 Filed 5–31–00; 8:45 am]

BILLING CODE 4140–01–M

DEPARTMENT OF HEALTH AND HUMAN SERVICES

National Institutes of Health

Prospective Grant of Exclusive License: ''Antitumor Macrocyclic Lactones, Compositions and Methods of Use'' and ''Vacuolar-Type (H+)-ATPase-Inhibiting Compounds, Compositions, and Uses Thereof''

AGENCY: National Institutes of Health, Public Health Service, DHHS.

ACTION: Notice.

SUMMARY: This is notice, in accordance with 35 U.S.C. § 209 (c) (1) and 37 CFR § 404.7 (a) (1) (i), that the National Institutes of Health, Department of Health and Human Services, is contemplating the grant of an exclusive license to practice the inventions embodied in U.S. Patent Application 60/053,784 entitled, ''Antitumor Macrocyclic Lactones, Compositions and Methods of Use'' filed on July 25, 1997; U.S. Patent Application 60/122,953 and 60/169,564 entitled, ''Vacuolar-Type (H+)-ATPase-Inhibiting Compounds, Compositions, and Uses Thereof'' filed on March 5, 1999 and December 8, 1999 respectively to BioChem Pharma Inc. of Quebec, Canada. The patent rights in these inventions have been assigned to the United States of America.

The prospective exclusive license territory will be worldwide and the field of use may be limited to composition of antitumor macrocyclic lactones and their uses as cancer therapeutic in humans.

DATES: Only written comments and/or license applications which are received by the National Institutes of Health on or before July 31, 2000 will be considered.

ADDRESSES: Requests for copies of the patent, inquiries, comments and other materials relating to the contemplated exclusive license should be directed to: Girish C. Barua, Ph.D., Technology Licensing Specialist, Office of Technology Transfer, National Institutes of Health, 6011 Executive Boulevard, Suite 325, Rockville, MD. 20852–3804. Telephone: (301) 496–7056, ext. 263; Facsimile (301) 402–0220; E-mail BaruaG@od.nih.gov.

SUPPLEMENTARY INFORMATION: The U.S. Patent Application 60/053,784 claims a series of macrocyclic lactones based on compounds isolated from certain sponges and tunicates collected from Western Australia. The U.S. Patent Applications 60/122,953 and 60/169,564 describe inventions relating to vacuolar-type (H+)-ATPase-inhibitory activity of macrocyclic lactones. Vacuolar-type ATPases (V-ATPases) have been described as a universal proton pump which are important for a myriad of physiological functions such as sorting of membrane and organellar proteins; proinsulin conversion; neurotransmitter uptake, receptor recycling, and cellular degradative processes. Licensee of these inventions will be required to comport with all applicable federal and country-of-collection policies relating to biodiversity.

The prospective exclusive license will be royalty-bearing and will comply with the terms and conditions of 35 U.S.C. § 209 and 37 CFR 404.7. The prospective exclusive license may be granted unless within sixty (60) days from the date of this published notice, the NIH receives written evidence and argument that establish that the grant of the license would not be consistent with the requirements of 35 U.S.C. § 209 and 37 CFR 404.7.

Applications for a license in the field of use filed in response to this notice will be treated as objections to the grant of the contemplated exclusive license. Comments and objections submitted to this notice will not be made available for public inspection and, to the extent permitted by law, will not be released under the Freedom of Information Act, 5 U.S.C. § 552.

Dated: May 23, 2000.

Jack Spiegel,

Director, Division of Technology Development and Transfer, Office of Technology Transfer.

[FR Doc. 00–13732 Filed 5–31–00; 8:45 am]

BILLING CODE 4140–01–P

DEPARTMENT OF HEALTH AND HUMAN SERVICES

National Institutes of Health

Prospective Grant of Exclusive License: Recombinant Virus Expressing Human Carcinoembryonic Antigen and Methods of Use Thereof

AGENCY: National Institutes of Health, Public Health Service, DHHS.

ACTION: Notice.

SUMMARY: This is notice, in accordance with 35 U.S.C. 209(c)(1) and 37 CFR 404.7(a)(1)(i), that the National Institutes of Health and Human Services is contemplating the grant of an exclusive license to practice the inventions embodied in U.S. Patent Applications S/N 07/695,024 filed on May 6, 1991, S/N 07/879,649 filed on May 6, 1992, S/N 08/198,691 filed on February 18, 1994, and S/N 08/270,106 filed on July 1, 1994 (U.S. Patent 5,698,530 issued on December 16, 1997), entitled ''Recombinant Virus Expressing Human Carcinoembryonic Antigen and Methods of Use Thereof,'' to Therion Biologics Corporation of Cambridge, Massachusetts. The patent rights in these inventions have been assigned to the United States of America.

The prospective exclusive license territory will be worldwide and the field of use may be limited to the use of recombinant poxviruses, excluding vaccinia and swinepox viruses, expressing the carcinoembryonic antigen (CEA) gene or portions thereof with the aim of eliciting an immunogenic response. The immune response *in vivo,* elicited after exposure to the recombinant virus, would be directed against malignant cells expressing CEA. The purpose of the prospective license is to develop poxvirus based vaccines directed against cancers expressing CEA.

DATES: Only written comments and/or license applications which are received by the National Institutes of Health on or before July 31, 2000 will be considered.

ADDRESSES: Requests for copies of these patents/patent applications, inquiries, comments and other materials relating to the contemplated exclusive license should be directed to: Elaine F. Gese, M.B.A., Technology Licensing Specialist, Office of Technology Transfer, National Institutes of Health, 6011 Executive Boulevard, Suite 325, Rockville, MD. 20852–3804. Telephone: (301) 496–7056, x282; Facsimile (301) 402–0220; E-mail eg46t@nih.gov.

SUPPLEMENTARY INFORMATION: The prospective exclusive license will be royalty-bearing and will comply with the terms and conditions of 35 U.S.C. 209 and 37 CFR 404.7. The prospective exclusive license may be granted unless within sixty (60) days from the date of this published notice, the NIH receives written evidence and argument that establish that the grant of the license would not be consistent with the requirements of 35 U.S.C. 209 and 37 CFR 404.7.

Applications for a license in the field of use filed in response to this notice will be treated as objections to the grant of the contemplated exclusive license. Comments and objections submitted to this notice will not be made available for public inspection and, to the extent permitted by law, will not be released under the Freedom of Information Act, 5 U.S.C. 552.

Dated: May 23, 2000.

Jack Spiegel,

Director, Division of Technology Development and Transfer, Office of Technology Transfer.

[FR Doc. 00–13731 Filed 5–31–00; 8:45 am]

BILLING CODE 4140–01–M

DEPARTMENT OF HEALTH AND HUMAN SERVICES

National Institutes of Health

Prospective Grant of Exclusive License: ''Anti-Notch Antibodies and Pharmaceutical Compositions for the Therapeutic Treatment of Tumors Which Over Express Notch Protein''

AGENCY: National Institutes of Health, Public Health Service, DHHS.

ACTION: Notice.

SUMMARY: This notice in accordance with 35 U.S.C. 209(c)(1) and 37 CFR 404.7(a)(1)(i) that the National Institutes of Health, Department of Health and Human Services, is contemplating the grant of an exclusive world-wide license to U.S. Patent Applications 60/124,119, entitled: ''Anti-Notch-1 Monoclonal Antibodies for Inducing Cellular Differentiation and Apoptosis'' and 60/102,816, entitled: ''Apoptosis Inducing Agents and Methods'' plus, if available, corresponding foreign patent applications to Viragen, Inc. having a place of business in Plantation, Florida. The patent rights in these inventions have been assigned to the United States of America.

DATES: Only written comments and/or applications for a license which are received by NIH on or before July 31, 2000 will be considered.

ADDRESSES: Requests for copies of the patent applications, inquiries, comments and other materials relating to the contemplated licenses should be directed to: J.R. Dixon, Ph.D., Technology Licensing Specialist, Office of Technology Transfer, National Institutes of Health, 6011 Executive Boulevard, Suite 325, Rockville, Maryland 20852-3804. Telephone: (301) 496–7735 ext. 206; Facsimile: (301) 402–0220. A signed Confidentiality Agreement will be required to receive copies of the patent applications.

SUPPLEMENTARY INFORMATION: The technology disclosed in USPA SN: 60/124,119 and 60/102,816 relates to a method, pharmaceutical composition, and antibodies to treat tumors by causing apoptosis in tumor cells that over express Notch protein.

The prospective exclusive license will be royalty-bearing and will comply with the terms and conditions of 35 U.S.C. 209 and 37 CFR 404.7. The prospective exclusive license may be granted unless within sixty (60) days from the date of this published notice, NIH receives written evidence and argument that establishes that the grant of the license would not be consistent with the requirements of 35 U.S.C. 209 and 37 CFR 404.7.

The field of use may be limited to the use of anti-Notch antibodies and pharmaceutical composition for the diagnosis and therapeutic treatment of tumors which over express Notch protein.

Applications for a license [*i.e.,* completed ''Application for License to Public Health Service Inventions] in the field of use of anti-Notch antibodies and pharmaceutical composition for the therapeutic treatment of tumors which over express Notch protein filed in response to this notice will be treated as objections to the grant of the contemplated license. Comments and objections will not be made available for public inspection and, to the extent permitted by law, will not be subject to disclosure under the Freedom of Information Act, 5 U.S.C. 552.

Dated: May 22, 2000.

Jack Spiegel,

Director, Division of Technology Development and Transfer, Office of Technology Transfer.

[FR Doc. 00–13733 Filed 5–31–00; 8:45 am]

BILLING CODE 4140–01–P

DEPARTMENT OF HEALTH AND HUMAN SERVICES

Public Health Service

National Institute of Environmental Health Sciences (NIEHS), National Institutes of Health (NIH), National Toxicology Program (NTP); Notice of Peer Review Meeting on the Revised Up-and-Down Procedure (UDP) as an Alternative Test Method for Assessing Acute Oral Toxicity; Request for Comments

Summary

Pursuant to Public Law 103–43, notice is hereby given of a public meeting coordinated by the Interagency Coordinating Committee on the Validation of Alternative Methods (ICCVAM) and the NTP Interagency Center for the Evaluation of Alternative Toxicological Methods (NICEATM) and sponsored by NIEHS and the NTP. The agenda topic is the scientific peer review of the revised Up-and-Down Procedure, a method proposed as a replacement for the existing LD50 test for evaluating the acute oral toxicity potential of chemicals. The meeting will take place on July 25, 2000, from 8:30 a.m. to 5:30 p.m. at the Sheraton Crystal City Hotel, 1800 Jefferson Davis Highway, Arlington, VA 22202. The meeting is open to the public.

Background

ICCVAM, with participation by 14 Federal regulatory and research agencies and programs, was established in 1997 to coordinate issues relating to the development, validation, acceptance, and national/international harmonization of toxicological test methods. ICCVAM seeks to promote the scientific validation and regulatory acceptance of new and improved test methods applicable to Federal agencies including methods that may reduce and replace animal use, or that refine animal use to reduce or eliminate pain and distress. The Committee's functions include the coordination of interagency reviews of toxicological test methods and communication with stakeholders throughout the process of test method development and validation. The following Federal regulatory and research agencies and organizations participate in this effort:

Consumer Product Safety Commission
Department of Defense
Department of Energy
Department of Health and Human Services
  Agency for Toxic Substances and Disease Registry
  Food and Drug Administration
  National Institute for Occupational Safety and Health/CDC
  National Institutes of Health
  National Cancer Institute
  National Institute of Environmental Health Sciences
  National Library of Medicine
Department of the Interior
Department of Labor
  Occupational Safety and Health Administration
Department of Transportation
  Research and Special Programs Administration
Environmental Protection Agency

The NTP Center for the Evaluation of Alternative Toxicological Methods (NICEATM) was established in 1998 and provides operational support for the ICCVAM. NICEATM and ICCVAM seek to promote the validation and regulatory acceptance of new test methods that will enhance agencies' abilities to assess risks, and that will refine, reduce, and replace animal use. NICEATM and ICCVAM collaborate to carry out activities associated with the development, validation, and regulatory acceptance of proposed new and improved test methods. These activities may include:

Independent Peer Review Panel Meetings, which are typically convened following the completion of comprehensive validation studies on a test method. Independent peer review has been determined to be an essential prerequisite for consideration of a test method for regulatory acceptance. Peer Review Panels are asked to develop scientific consensus on the usefulness and limitations of test methods to generate information for specific human health and/or ecological risk assessment purposes. Following the independent peer review of a test method, ICCVAM forwards recommendations on their usefulness to agencies for their consideration. Federal agencies then determine the regulatory acceptability of a method according to their mandates.

Expert Panel Meetings, which are typically convened to evaluate the validation status of a method following the completion of initial development and pre-validation studies. An Expert Panel is asked to recommend additional validation studies that might be helpful in further characterizing the usefulness of a method and to identify any additional research and development efforts that might enhance the effectiveness of a method.

Test Method Workshops, which are convened, as needed, to evaluate the adequacy of current methods for assessing specific toxicities, to identify areas in need of improved or new testing methods, to identify research efforts that may be needed to develop new test methods, and to identify appropriate development and validation activities for proposed new methods.

Agenda

The agenda topic is the scientific peer review evaluation of the validation status of the revised Up-and-Down Procedure (UDP). This procedure is an updated version of the Organization for Economic Cooperation and Development (OECD) Test Guideline 425 (OECD Guideline for the Testing of Chemicals, Acute Oral Toxicity: Up-and-Down Procedure. Guideline 425, adopted September 21, 1998, OECD, Paris, France, *http://www.oecd.org/ehs/test*). The revised UDP is proposed as a substitute for the existing OECD Test Guideline 401 (OECD Guideline for the Testing of Chemicals, Acute Oral Toxicity, Guideline 401, adopted February 24, 1987, OECD, Paris, France). OECD has proposed that Guideline 401 should be deleted since three alternative methods are now available [OECD Document ENV/JM (99) 19, Test Guidelines Programme, Acute Oral Toxicity Testing: Data Needs and Animal Welfare Considerations, 29th Joint Meeting, June 8–11, 1999, Paris, France]. Prior to deletion of Guideline 401, U.S. agencies have requested that ICCVAM conduct an independent peer review of the revised UDP to determine the validity of the method as a substitute for Guideline 401. An Independent Peer Review Panel will (1) evaluate the extent to which established validation and acceptance criteria (''Validation and Regulatory Acceptance of Toxicological Test Methods: A Report of the ad hoc Interagency Coordinating Committee on the Validation of Alternative Methods,'' NIH Publication No. 97–3981, *http://ntpserver.niehs.nih.gov/htdocs/ICCVAM/iccvam.html*) have been addressed, and (2) will provide conclusions and recommendations regarding the usefulness and limitations of the method as a substitute for the traditional acute oral toxicity test method (OECD Guideline 401, 1987). The UDP has the potential to reduce the number of animals required to classify chemicals for acute oral toxicity compared to Guideline 401. A request for nominations of expert scientists for the Panel was previously published (FR 65, 8385–8386, February 18, 2000).

The meeting will begin at 8:30 a.m. on July 25 and will conclude by 5 p.m. There will be a brief orientation on ICCVAM and the ICCVAM review process, followed by a peer review of the revised UDP and supporting

information. The Peer Review Panel will discuss the usefulness of the UDP as an alternative to the traditional LD50 methods currently accepted by government regulatory authorities for the assessment of acute oral toxicity potential of chemicals.

Background Document Available for Comment

NICEATM has prepared a Background Review Document that includes the revised UDP protocol and documents supporting the basis and validity of the test method. Copies of the Up-and-Down Procedure Background Review Document and supporting documentation may be obtained from NICEATM, MD EC–17, P.O. Box 12233, Research Triangle Park, NC, 27709, Phone: 919–541–3398, Fax: 919–541–0947, E-mail: *ICCVAM@niehs.nih.gov*. A copy of the Background Review Document and comments submitted will be available for viewing Monday through Friday, from 12 noon to 4 p.m. EST at the U. S. Environmental Protection Agency, Office of Prevention, Pesticides and Toxic Substances, Non-Confidential Information Center, Room 607B, Northeast Mall, 401 M Street, SW, Washington, DC 20460. Thirty days prior to the meeting, a detailed agenda will be available on the web at: *http://iccvam.niehs.nih.gov* or by contacting NICEATM.

Persons requesting additional information regarding the rationale for the OECD proposal to delete the OECD Guideline 401 can contact William T. Meyer, U.S. Environmental Protection Agency, Office of Pesticide Programs, Phone: 703–305–7188; E-mail: *Meyer,WilliamT@epa.gov.* Mail address: Ariel Rios Bldg., 1200 Pennsylvania Ave., NW, Mail Code 7506C, Washington, DC 20460; Federal Express address: 1921 Jefferson Davis Highway, Room 1104H, Arlington, VA 22202.

Request for Comments

NICEATM invites the submission of written comments on the revised Up-and-Down Procedure, and submission of other available information and data on the UDP, including information about completed, ongoing, or planned studies. Written comments and additional information should include name, affiliation, mailing address, phone, fax, e-mail and sponsoring organization (if any), and should be sent by mail, fax, or e-mail to NICEATM at the address listed above. Comments may be submitted anytime before the meeting; however, comments should be submitted by June 15 in order to ensure time for adequate review by the Panel. Written comments will be made available to the Peer Review Panel members, ICCVAM agency representatives and experts, and attendees at the meeting and will be included in the resource materials assembled on the UDP.

The Expert Panel Meeting will be open to the public, and time will be provided for presentation of public oral comments at designated times during the meeting. Speakers will be assigned on a first-come, first-serve basis and up to seven minutes will be allotted to each speaker. In order to facilitate planning, members of the public who wish to present oral statements at the meeting should contact NICEATM as soon as possible, but no later than July 18, 2000. Persons registering to make comments are asked to provide, if possible, a written copy of their statement in advance so that copies can be made and distributed to the Peer Review Panel members for their timely consideration prior to the meeting. Written statements can supplement and expand the oral presentation, and each speaker is asked to provide his/her name, affiliation, mailing address, phone, fax, e-mail and supporting organization (if any). Registration for making public comments will also be available on-site. If registering on-site to speak and reading oral comments from printed copy, the speaker is asked to bring 50 copies of the text. These copies will be distributed to the Panel and supplement the record.

Summary minutes from the meeting and the final report from the Peer Review Panel will be prepared and made available upon request to NICEATM (address provided above). These documents will also be made available via the internet at the website: *http://iccvam.niehs.nih.gov.*

Additional information about ICCVAM and NICEATM can be found at the website:*http://iccvam.niehs.nih.gov.*

Dated: May 22, 2000.

Samuel H. Wilson,

Deputy Director, National Institute of Environmental Health Sciences.

[FR Doc. 00–13734 Filed 5–31–00; 8:45 am]

BILLING CODE 4140–01–P

DEPARTMENT OF HOUSING AND URBAN DEVELOPMENT

[Docket No. FR–4563–N–06]

Notice of Proposed Information Collection for Tenant Opportunities Semi-Annual Report

AGENCY: Office of the Assistant Secretary for Public and Indian Housing, HUD.

ACTION: Notice.

SUMMARY: The proposed information collection requirement described below will be submitted to the Office of Management and Budget (OMB) for review, as required by the Paperwork Reduction Act. The Department is soliciting public comments on the subject proposal.

DATES: *Comments Due Date:* July 31, 2000.

ADDRESSES: Interested Persons are invited to submit comments regarding this proposal. Comments should refer to the proposal by name and/or OMB Control number and should be sent to: Mildred M. Hamman, Reports Liaison Officer, Public and Indian Housing, Department of Housing and Urban Development, 451 7th Street, SW, Room 4238, Washington, DC 20410–5000.

FOR FURTHER INFORMATION CONTACT: Mildred M. Hamman, (202) 708–3642, extension 4128, for copies of the proposed forms and other available documents. (This is not a toll-free number).

SUPPLEMENTARY INFORMATION: The Department will submit the proposed information collection to OMB for review, as required by the Paperwork Reduction Act of 1995 (44 U.S.C. Chapter 35, as amended).

This Notice is soliciting comments from members of the public and affected agencies concerning the proposed collection of information to: (1) Evaluate whether the proposed collection of information is necessary for the proper performance of the functions of the agency, including whether the information will have practical utility; (2) evaluate the accuracy of the agency's estimate of the burden of the proposed collection of information; (3) enhance the quality, utility, and clarity of the information to be collected; and (4) minimize the burden of the collection of information on those who are to respond, including through the use of appropriate automated collection techniques or other forms of information technology; *e.g.*, permitting electronic submission of responses.

This Notice also lists the following information:

Title of Proposal: Tenant Opportunities Semi-Annual Report.

OMB Control Number: 2577–0087.

Description of the need for the information and proposed use: Grantees participating in TOP are required to submit Semiannual Report (Form HUD–52370), which will evaluate the progress in carrying out the approved TOP workplan/budget. Grantees shall submit the report on a semiannual basis for the

periods ending June 30 and December 31. The reports must be submitted to HUD within 30 days after the end of each semiannual reporting period. No grant payments will be approved for drawdown through the Line of Credit Control System/Voice Response System (LOCCS/VRS) for grantees with overdue progress reports. Form HUD–52371, Tenant Opportunities Program Consultant/Trainer Checklist is canceled.

Agency form numbers: HUD–52370.

Members of affected public: State, Local or Tribal government.

Estimation of the total number of hours needed to prepare the information collection including number of respondents, frequency of response, and hours of response: 958 TOP grantees, semiannual, two hours per response, 3,832 hours total reporting burden.

Status of the proposed information collection: Reinstatement.

Authority: Section 3506 of the Paperwork Reduction Act of 1995, 44 U.S.C. Chapter 35, as amended.

Dated: May 24, 2000.

Harold Lucas,

Assistant Secretary for Public and Indian Housing.

BILLING CODE 4210–33–M

Tenant Opportunities
Semi-Annual Report
Program: _____

U.S. Department of Housing and Urban Development
Office of Public and Indian Housing

OMB Approval No. 2577 -0087
(exp. 5/31/2000)

See page 4 for Instructions for completing this form and the Public reporting burden for this collection of information

Part I. Grant Data

1. Date of Report (mm/dd/yyyy) | Reporting Period (Check one and enter year) ☐ a. Jan 1 - Jun 30, (yyyy) _____ ☐ b. Jul 1 - Dec 31, (yyyy) _____ ☐ c. Final

2. Grantee Name & Address (Include street, suite/room/apt. no., city, state, zip)	3. Grant Number	4. HA Wide? (See Instructions) ☐ Yes ☐ No
	5a. Start Date (mm/dd/yyyy)	5b. End Date (mm/dd/yyyy)
	6. Phone Ext.	7. Fax

8. **Executive Officers Section (Housing Authorities do not fill in this section)**

	First Name	Last Name	Phone	Ext.	Fax
8a. President/Chairperson (Mr./Ms./Miss/Mrs.)					
8b. Vice President/Vice Chairperson (Mr./Ms./Miss/Mrs.)					
8c. Secretary (Mr./Ms./Miss/Mrs.)					
8d. Treasurer (Mr./Ms./Miss/Mrs.)					
8e. Grant Manager/Contact Person (Mr./Ms./Miss/Mrs.)					
8f. Other (specify) (Mr./Ms./Miss/Mrs.)					

9. Housing Authority Contact Person	10. Housing Authority Number

11. Name of Development(s)	Project Number	Number of Units

12. **Co-Applicants or Significant Partners**

12a. Organization Name & Address (Include street, suite/room/apt. no., city, State, zip)	Type of Organization (i.e. non-profit, etc.)	
	Name of Contact Person	
	Phone Ext.	Fax
12b. Organization Name & Address (Include street, suite/room/apt. no., city, State, zip)	Type of Organization (i.e. non-profit, etc.)	
	Name of Contact Person	
	Phone Ext.	Fax
12c. Organization Name & Address (Include street, suite/room/apt. no., city, State, zip)	Type of Organization (i.e. non-profit, etc.)	
	Name of Contact Person	
	Phone Ext.	Fax

Part II. Financial Summary

Item	Amount
1. Initial Grant Award	$
2. Grant Amendment (if any added during report period)	$
3. Funds drawn from LOCCS	$
4. Funds Grantee is obligated to pay under contract to others but not yet spent	$
5. Balance of funds in bank account at the end of report period	$

Part III. Progress Summary

Category	Yes	No	Date (mm/dd/yyyy)
1. Is there a financial management system in place for grant funds that meet HUD's requirements?			
2. Has the financial management systen been certified by a CPA?			
3. Has the Grantee adopted Bylaws?			
4. Do the Grantee's Bylaws meet HUD guidelines?			
5. Has the Grantee signed a Memorandum of Understanding (MOU) with the housing authority?			
6. Has the Grantee contracted with or hired a consultant/traininer?			
7. Has the Grantee comleted financial management training?			
8. Has the Grantee completed training on HUD regulations/policies regarding public housing?			
9. Has the Grantee completed leadership and organization capacity training?			
10. Has the Grantee received other types of training? ☐ Yes ☐ No (if "yes" please list below)			
11. Has the Grantee completed a feasibility study/needs assessment?			
12. Has the Grantee been incorporated?			
13. Has the Grantee applied for 501(c)(3) tax exempt status?			
14. Has the Grantee been granted a 501(c)(3) tax exemption?			
15. Do the Grantee's incorporation documents meet HUD guidelines?			

Part IV. Grantee Accomplishments Since Effective Date of Grant

Status of Management Contract(s)	Yes	No	Date (mm/dd/yyyy)
1. Has the Grantee entered into a management contract(s) with the housing authority?			
2. Is there a contract for/involving ☐ dual ☐ full property management? (check one)			
3. s there a contract for/involving lawn service?			
4. Is there a contract for/involving painting?			
5. Is there a contract for/involving the repair and maintenance of units?			
6. Is there a contract for/involving rent collection?			
7. Other (describe)			
8. Other (describe)			
9. Total number of management contract jobs for residents			
10. Vacancy rate prior to TOP grant			
11. Current vacancy rate			
12. Rate of rent collection prior to TOP grant			
13. Current rate of rent collection			

Resident Owned Businesses Created/Assisted by Grantee

14. Type of Business	Yes	No	Start Date (mm/dd/yyyy)	Total number of jobs for residents
a. Lawn service business				
b. Painting business				
c. Repair business				
d. Day Care business				
e. Laundromat business				
f. Store				
g. Other business (describe)				
h. Other business (describe)				
i. Other business (describe)				

Job Training Programs Created/Assisted by Grantee

15. Type of Job Training Program	Number of residents trained	Number of jobs for residents
a.		
b.		
c.		
d.		
e.		
f.		

Community/Social Services Provided by Grantee

16. Type of Community/Social Service	Number of resident participants
a. Youth education/tutoring	
b. Youth recreational/cultural activities	
c. Youth mentoring	
d. Adult education/literacy programs	
e. Parenting/family support programs	
f. Substance abuse counseling/treatment	
g. Resident anti-crime patrols	
h. Neighborhood watch program	
i. Other	

17. Is Grantee pursuing a homeownership program? ☐ Yes ☐ No

18. Homeownership feasibility study completed? ☐ Yes Date (mm/dd/yyyy) ☐ ☐ No

19. Number of families interested in homeownership? ☐

Additional Remarks

Remarks continued on additional page ☐ Yes ☐ No

This collection of information requires that each grantee participating in the Tenant Opportunity Program (TOP) submit semi-annual reports that enable HUD to evaluate the progress in carrying out the approved TOP Work Plan/Budget. No grant payments will be approved for drawdown through the Line of Credit Control System/Voice Response System (LOCCS/VRS) for grantees with overdue progress reports. This information will be used by HUD to monitor grantees and their administration of the grant to ensure that Federal funds are spent according to the work plan/budget. Responses to this collection of information are voluntary. Authority for this collection of information is Sections 23(c) and (g) of the U.S. Housing Act of 1937 as amended by 554 of the Cranston-Gonzales National Affordable Housing Act P.L. 101-625. The information requested does not lend itself to confidentiality.

Freedom of Information Act: Semi-Annual reports submitted are subject to disclosure under the Freedom of Information Act (FOIA). To assist HUD in determining whether to release information contained in the report in the event a FOIA request is received, the recipient may, through clear earmarking or otherwise, indicate those portions of its report that it believes should not be disclosed. The recipient's views will be used solely to aid HUD in preparing its response to a FOIA request; HUD is required by the FOIA to make an independent evaluation of the information. HUD suggests that the recipient provide as basis, when possible, for its belief that confidential treatment is appropriate; general assertions or blanket requests for confidentiality, without more information, are of limited value to HUD in making determinations concerning the release of information under FOIA. HUD is required to segregate disclosable information from non-disclosable items, so an applicant should be careful to identify each portion of the application for which confidential treatment is requested. HUD emphasizes that the presence or absence of comments or earmarking regarding confidential information will have no bearing on the evaluation of reports submitted in response to this solicitation.

Public reporting burden for this collection of information is estimated to average 2 hours per response, including the time for reviewing instructions, searching existing data sources, gathering and maintaining the data needed, and completing and reviewing the collection of information. This agency may not conduct or sponsor, and a person is not required to respond to, a collection information unless that collecton displays a valid OMB control number.

Instructions for Completing the Semi-Annual Report

Be sure to identify the Program area in the form Title

Part I. Grant Data

1. Enter date of report and check the Reporting period either 1a or 1b and enter the year.

1c. Place an "x" in the box if all program activities are completed and this is the final report for this program.

2. Enter the full name and complete address of your organization.
3. Enter the Technical Assistance Grant number.
4. Answer yes or no if grant applies HA wide. If you are a city-wide organization, list in Item 11 the name of all developments that you are representing.

5a. Enter date Work Plan activities began.

5b. Enter date Work Plan activities were completed.

6. Enter phone number and area code of the organization's office/official's phone number, include extension.
7. Enter organization's fax number include area code.
8. **Executive Officers Section**

   8a thru 8d List full name and title, phone number, and fax number (if different than Item 7) of the President, Vice President, Secretary, and Treasurer.

   8e. List the full name and title, phone number, and fax number (if different than Item 7) of person who is familiar with the TOP/TAG Work Plan/budget. (Use the same name that appears on the HUD 1044 TAG, block 10.)

   8f. Other/specify. List the full name and title, phone number, and fax number (if different than Item 7) of an alternate contact person. (the name of one other RC officer or a staff person at the HA)

9. List the name of a contact person at the housing authority.
10. Enter housing authority code.
11. Enter the name of your development, project number, and number of units. If you are a city-wide organization, list the name, project number(s), and number of units for all developments that you are representing.
12. **Co-applicants or Significant Partners.** This section is optional. Grantees are encouraged to fill it out for other organizations that are helping grantees carry out their program.

Part II. Financial Summary

1. Enter amount of the initial grant award.
2. Enter amount of any monies added to the initial grant award.
3. Enter total amount of funds drawn from the LOCCS.
4. Enter the amount of funds for which you have obligated through an executed contract for services **but not yet spent**.
5. Enter the amount of funds you have in the orgnaization's bank account.

Part III. Progress Summary

For each Item, check the **yes** or **no** box as applicable and enter the date in which the action was executed.

10. If the Grantee received other types of training check "yes, " and list types of training and the date completed.

Part IV. Grantee Accomplishments

Status of Management Contract(s)

For each Item, check the **yes** or **no** box as applicable and enter date contract was executed with HA.

7. List any other contract you have with the HA.
8. List any other contract you have with the HA.
9. Enter total number of residents employed as a result of the contracts you list above.
10. Enter the vacancy rate at your development prior to receiving the grant (You may need to consult with your local Housing Authority for this data).
11. Enter the current vacancy rate (You may need to consult with your local Housing Authority for this data).
12. Enter the percentage of the tenant accounts receivables (TARs) prior to receiving the grant (You may need to consult with your local Housing Authority for this data).
13. Enter the current TARs at the development (You may need to consult with your local Housing Authority for this data).

Resident Owned Businesses Created/Assisted by Grantee.

14. Check **yes** or **no** as applicable, the start date of the business(s), and the total the number of jobs for residents.(resident-owned businesses created and/or assisted as a result of the grant funds) (list businesses by individual residents or RC/RMC).

Job Training Programs Created/Assisted by Grantee.

15. List the job training programs, number of residents trained, and number of jobs created for residents.

Community/Social Services Provided by Grantee

16. List the type of community/social services provided and the number of residents participating in the programs listed.
17. Check **yes** or **no** as applicable
18. Check **yes** or **no** as applicable and enter the date completed.
19. Enter the number of families in your development interested in homeownership opportunities.

Use the **"Additional Remarks"** secton, as well as additional sheets as needed, for further comments/explanations.

Send this report to:

Aspen Systems
Resident Initiatives Clearinghouse
Mail Stop 3K
1600 Research Blvd
Rockville, MD 20850

and one copy to the local HUD Field Office.

Previous editions are obsolete | Page 4 of 4 | form **HUD-52370** (7/96)

[FR Doc. 00–13609 Filed 5–31–00; 8:45 am]

BILLING CODE 4210–33–C

DEPARTMENT OF THE INTERIOR

Fish and Wildlife Service

Information Collection Submitted to the Office of Management and Budget (OMB) for Approval Under the Paperwork Reduction Act

AGENCY: Fish and Wildlife Service, Interior.

ACTION: Notice; request for comments.

SUMMARY: The U.S. Fish and Wildlife Service has submitted the collection of information listed below to OMB for approval under the provisions of the Paperwork Reduction Act. A copy of the information collection requirement is included in this notice. If you wish to obtain copies of the proposed information collection requirement, related forms, and explanatory material, contact the Service Information Collection Clearance Officer at the address listed below.

DATES: OMB has up to 60 days to approve or disapprove information collection but may respond after 30 days. Therefore, to ensure maximum consideration, you must submit comments on or before July 3, 2000.

ADDRESSES: Send your comments on the requirement to the Office of Management and Budget, Attention: Department of the Interior Desk Officer, 725 17th Street, NW, Washington, DC 20503, and to Rebecca Mullin, Service Information Collection Clearance Officer, U.S. Fish and Wildlife Service, ms 222–ARLSQ, 1849 C Street NW, Washington, DC 20204.

FOR FURTHER INFORMATION CONTACT: To request a copy of the information collection request, explanatory information and related forms, contact Rebecca A. Mullin at (703) 358–2287, or electronically to rmullin@fws.gov.

SUPPLEMENTARY INFORMATION: The Office of Management and Budget (OMB) regulations at 5 CFR 1320, which implement provisions of the Paperwork Reduction Act of 1995 (Pub. L. 104–13), require that interested members of the public and affected agencies have an opportunity to comment on information collection and recordkeeping activities (see 5 CFR 1320.8(d)). The U.S. Fish and Wildlife Service (We) has submitted a request to OMB to renew its approval of the collection of information for the Sandhill Crane Harvest Survey. We are requesting a 3-year term of approval for this information collection activity. A previous 60-day notice on this information collection requirement was published in the December 2, 1999 (64 FR 67583) **Federal Register** inviting public comment. No comments on the previous notice were received. This notice provides an additional 30 days in which to comment on the following information.

Federal agencies may not conduct or sponsor, and a person is not required to respond to, a collection of information unless it displays a currently valid OMB control number. The OMB control number for this collection of information is 1018–0023.

The Migratory Bird Treaty Act (16 U.S.C. 703–711) and Fish and Wildlife Act of 1956 (16 U.S.C. 742d) designate the Department of the Interior as the key agency responsible for the wise management of migratory bird populations frequenting the United States and for the setting of hunting regulations that allow appropriate harvests that are within the guidelines that will allow for those populations' well-being. These responsibilities dictate the gathering of accurate data on various characteristics of migratory bird populations. The Sandhill Crane Harvest Survey is an essential part of the migratory bird management program. The survey helps determine sandhill crane harvests and harvest rates that are used to regulate sandhill crane populations (by promulgating hunting regulations) and to encourage hunting opportunity, especially where crop depredations are chronic and/or lightly harvested populations occur.

The annual questionnaire surveys people who obtained a sandhill crane hunting permit. At the end of the hunting season, we randomly select a sample of permit holders and send those people a questionnaire that asks them to report the date, State, county, and number of birds harvested for each of their sandhill crane hunts. Their responses provide estimates of the temporal and geographic distribution of the harvest as well as the average harvest per hunter, which, combined with the total number of sandhill crane permits issued, enables us to estimate the total harvest of sandhill cranes.

The Sandhill Crane Harvest Survey enables us to annually estimate the magnitude of the harvest, and the portion it constitutes of the total mid-continent sandhill crane population. Based on information from this survey, sandhill crane hunting regulations are adjusted as needed to optimize harvest at levels that provide a maximum of hunting recreation while keeping populations at desired levels.

Title: Sandhill Crane Harvest Survey.

Approval Number: 1018–0023.

Service Form Number: 3–530, 3–530A, and 3–2056N.

Frequency of Collection: Annually.

Description of Respondents: Individuals and households.

Total Annual Burden Hours: The reporting burden is estimated to average 5 minutes per respondent. The Total Annual Burden Hours is 614 hours.

Total Annual Responses: About 7,400 individuals are expected to participate in the survey.

We invite comments concerning this renewal on: (1) Whether the collection of information is necessary for the proper performance of our migratory bird management functions, including whether the information will have practical utility; (2) the accuracy of our estimate of the burden of the collection of information; (3) ways to enhance the quality, utility, and clarity of the information to be collected; and, (4) ways to minimize the burden of the collection of information on respondents. The information collections in this program are part of a system of record covered by the Privacy Act (5 U.S.C. 552(a)).

Dated: April 4, 2000.

Paul R. Schmidt,

Acting Assistant Director for Refuges and Wildlife.

[FR Doc. 00–13663 Filed 5–31–00; 8:45 am]

BILLING CODE 4310–55–P

DEPARTMENT OF THE INTERIOR

Fish and Wildlife Service

Receipt of Application for Endangered Species Permit

AGENCY: Fish and Wildlife Service, Interior.

ACTION: Notice of receipt of application for endangered species permit.

SUMMARY: The following applicants have applied for permits to conduct certain activities with endangered species. This notice is provided pursuant to Section 10(c) of the Endangered Species Act of 1973, as amended (16 U.S.C. 1531 *et seq.*).

If you wish to comment, you may submit comments by any one of several methods. You may mail comments to the Service's Regional Office (see **ADDRESSES**). You may also comment via the internet to ''kenneth_graham@fws.gov''. Please submit comments over the internet as an ASCII file avoiding the use of special characters and any form of encryption. Please also include your name and return address in your internet message. If you do not receive a confirmation from the Service that we have received your internet message, contact us directly at either telephone number

listed below (see **FURTHER INFORMATION**). Finally, you may hand deliver comments to the Service office listed below (see **ADDRESSES**). Our practice is to make comments, including names and home addresses of respondents, available for public review during regular business hours. Individual respondents may request that we withhold their home address from the administrative record. We will honor such requests to the extent allowable by law. There may also be other circumstances in which we would withhold from the administrative record a respondent's identity, as allowable by law. If you wish us to withhold your name and address, you must state this prominently at the beginning of your comments. We will not; however, consider anonymous comments. We will make all submissions from organizations or businesses, and from individuals identifying themselves as representatives or officials of organizations or businesses, available for public inspection in their entirety.

DATES: Written data or comments on these applications must be received, at the address given below, by July 3, 2000.

ADDRESSES: Documents and other information submitted with these applications are available for review, *subject to the requirements of the Privacy Act and Freedom of Information Act*, by any party who submits a written request for a copy of such documents to the following office within 30 days of the date of publication of this notice: U.S. Fish and Wildlife Service, 1875 Century Boulevard, Suite 200, Atlanta, Georgia 30345 (Attn: Ken Graham, Permits Biologist). Telephone: 404/679–7358; Facsimile: 404/679–7081.

FOR FURTHER INFORMATION CONTACT: Ken Graham, Telephone: 404/679–7358; Facsimile: 404/679–7081.

SUPPLEMENTARY INFORMATION:

Applicant: Christopher A. Taylor, Illinois Natural History Survey, Champaign, Illinois, TE027337–0

The applicant requests a permit to capture the Nashville crayfish, *Orconectes shoupi*, and to collect one specimen for genetic/systematics research on the species, in order to clarify species classification and for enhancement of management and survival of the species.

Applicant: Dr. Paul Yokely, Jr., Florence, Alabama, TE027307–0

The applicant requests authorization to take (capture, identify, release, collect dead freshwater snail and mussel shells, and to relocate captured specimens upstream away from potential harm due to construction activities) federally-listed fish, snails, and mussels during the course of aquatic surveys throughout Alabama, Georgia, Mississippi, and Tennessee. Any taking would occur during routine biological surveys and monitoring, for the purpose of enhancement of survival of the species.

Applicant: Michael R. Hurst, Chattahoochee-Oconee National Forest, Gainesville, Georgia, TE027344–0

The applicant requests authorization to take (capture, band, and harass during nest monitoring, construction of artificial cavities, and placement of restrictor plates) the endangered red-cockaded woodpecker, *Picoides borealis*, on and adjacent to the Oconee National Forest in Georgia, for the purpose of enhancement of survival of the species.

Applicant: Stuart W. McGregor, Geological Survey of Alabama, Tuscaloosa, Alabama, TE027346–0

The applicant requests authorization to take (survey for, capture, handle, identify, and release) 44 species of federally-listed freshwater mussels that could be potentially encountered during routine biological surveys throughout Alabama and in the upper Tombigbee River system in Mississippi, for the purpose of conducting status surveys and enhancement of survival of the species.

Applicant: Steven D. Maloney, Griggs & Maloney Incorporated, Murfreesboro, Tennessee, TE027376–0

The applicant requests authorization to take (capture, identify, and relocate) the endangered Nashville Crayfish, *Orconectes shoupi*, throughout the species range in Tennessee, for the purpose of enhancement of survival of the species.

Dated: May 25, 2000.

H. Dale Hall,

Acting Regional Director.

[FR Doc. 00–13656 Filed 5–31–00; 8:45 am]

BILLING CODE 4310–55–P

DEPARTMENT OF THE INTERIOR

Fish and Wildlife Service

Notice of Availability of a Safe Harbor Agreement With Assurances and Receipt of an Application for an Incidental Take Permit for Activities on Certain State Lands, by the Arizona Department of Transportation

SUMMARY: The Arizona Department of Transportation (Applicant) has applied to the U.S. Fish and Wildlife Service (Service) for an enhancement of survival permit pursuant to Section 10(a) of the Endangered Species Act (Act). The Applicant has been assigned permit number TE–026887–0. The requested permit, which is for a period of 10 years, would authorize the incidental take of the endangered Gila topminnow (*Poeciliopsis occidentalis*) and the endangered desert pupufish (*Cyprinodon macularius*). The proposed take may occur on certain State Lands owned by the Arizona Department of Transportation in the State of Arizona.

Non-federal landowners, who commit to implementing conservation for listed species through a Safe Harbor Agreement, will receive assurances from the Service. The assurances are that additional conservation measures will not be required and additional land, water, or resource use restrictions will not be imposed. The Service has prepared the Categorical Exclusion for the enhancement of survival permit application. A determination of whether jeopardy to the species would occur will not be made until at least 30 days from the date of publication of this notice. This notice is provided pursuant to Section 10(c) of the Act and National Environmental Policy Act regulations (40 CFR 1506.6).

DATES: Written comments on the application should be received on or before July 3, 2000. The agreement, along with any supporting documentation, is available for public review, subject to the requirements of the Privacy Act and Freedom of Information Act, by any party who submits a written request for a copy of such documents within the comment period to the address specified below.

ADDRESSES: Persons wishing to review the application may obtain a copy by writing to the Regional Director, U.S. Fish and Wildlife Service, P.O. Box 1306, Albuquerque, New Mexico 87103. Persons wishing to review the Safe Harbor Agreement and Categorical Exclusion may obtain a copy by contacting Doug Duncan, U.S. Fish and Wildlife Service, Ecological Services Tucson Sub Office, 300 West Congress, Room 6J, Tucson, AZ 85701 (520/670–4860) or David Harlow, U.S. Fish and Wildlife Service, Arizona Ecological Services Field Office, 2321 West Royal Palm Road, Suite 103, Phoenix, Arizona 85021 (602/640–2720; fax 602/640–2730). Documents will be available for public inspection by written request, by appointment only, during normal business hours (7:30 to 4:30) at the offices above. Written data or comments concerning the application, Safe Harbor Agreement, and Categorical Exclusion should be submitted to the Field

Supervisor, Ecological Services Field Office, Phoenix, AZ, (see address above). Please refer to permit number TE–026887–0 when submitting comments. All comments received, including names and addresses, will become part of the official administrative record and may be made available to the public.

FOR FURTHER INFORMATION CONTACT: Doug Duncan at the above Tucson Sub Office.

SUPPLEMENTARY INFORMATION: Section 9 of the Act prohibits the ''taking'' of threatened and endangered species such as the Gila topminnow and desert pupfish. However, the Service, under limited circumstances, may issue permits to take threatened or endangered wildlife species incidental to, and not the purpose of, otherwise lawful activities. Regulations governing permits for endangered species are at 50 CFR 17.22.

The proposed action is issuance of an enhancement of survival permit and implementation of the Safe Harbor Agreement as submitted by the Applicant. The Safe Harbor Agreement provides for actions that promote conservation and recovery of the Gila topminnow and desert pupfish by providing refugia sites. One refugium site in Tempe, Arizona, is proposed for release of Gila topminnow and desert pupfish. Other sites owned by the Arizona Department of Transportation within the natural ranges of the species may be used as refugia for either species. Sites will be determined mutually by the Service and the Arizona Department of Transportation. The Safe Harbor Agreement is designed to provide a net conservation benefit to the Gila topminnow and desert pupfish. The Safe Harbor Agreement has stipulations for monitoring of species populations and habitats and functioning of the Safe Harbor Agreement. The Safe Harbor Agreement also provides for funding the mitigation measures and monitoring.

APPLICANT: The Arizona Department of Transportation intends to manage certain retention basins and other sites for Gila topminnow and desert pupfish. The incidental take of these fish may occur at the release sites during certain management activities. The Service anticipates that this Safe Harbor Agreement will provide a net conservation benefit for these two species of native Arizona fish.

Geoffrey L. Haskett,

Regional Director, Region 2, Albuquerque, New Mexico.

[FR Doc. 00–13691 Filed 5–31–00; 8:45 am]

BILLING CODE 4510–55–P

DEPARTMENT OF THE INTERIOR

Fish and Wildlife Service

Availability of a Draft Environmental Assessment and Preliminary Finding of No Significant Impact, and Receipt of an Application for an Incidental Take Permit for Residential, Commercial, and School Board Development in Northern Indian River County, FL

AGENCY: Fish and Wildlife Service, Interior.

ACTION: Notice.

Indian River County Board of County Commissioners and City of Sebastian City Council (Applicants) request an incidental take permit (ITP) pursuant to section 10(a)(1)(B) of the Endangered Species Act of 1973 (U.S.C. 1531 *et seq.*), as amended (Act). The Applicants anticipate taking up to seven families of the threatened Florida scrub-jay (*Aphelocoma coerulescens*) (scrub-jay), over the next 30 years incidental to the clearing of land associated with residential construction in northern Indian River County, including infill in the existing Sebastian Highlands subdivision located within the city limits of Sebastian. Take is also requested for commercial development on about 88 acres of property owned by the City of Sebastian. Indian River County School Board anticipates that take of scrub-jays may also occur in the future due to expansion of school facilities on about four acres. The anticipated take and measures to minimize and mitigate these takings will occur in sections 18, 19, 20, 29, and 30, Township 31 South, Range 39 East and sections 13, 14, 23, 24, 25, and 26, Township 31 South, Range 38 East, northern Indian River County, Florida.

The issuance of land clearing permits by the City of Sebastian will destroy about 79 acres of habitat occupied by the scrub-jay in residential areas. Another 88 acres of habitat within commercial property owned by the City of Sebastian and about 4 acres of property owned by the School Board is currently unoccupied by scrub-jays, but may become occupied due to proposed habitat management activities. Future development within these parcels may also result in take of scrub-jays. Measures to mitigate for taking of scrub-jays are proposed by the Applicants. A more detailed description of the mitigation and minimization measures to address the effects of the Project to the scrub-jay are outlined in the Applicant's Habitat Conservation Plan (HCP), the Service's draft Environmental Assessment (EA), and in the **SUPPLEMENTARY INFORMATION** section below.

The Service also announces the availability of a draft EA and HCP for the incidental take application. Copies of the draft EA and/or HCP may be obtained by making a request to the Regional Office (see **ADDRESSES**). Requests must be in writing to be processed. This notice also advises the public that the Service has made a preliminary determination that issuing the ITP is not a major Federal action significantly affecting the quality of the human environment within the meaning of Section 102(2)(C) of the National Environmental Policy Act of 1969, as amended (NEPA). The preliminary Finding of No Significant Impact (FONSI) is based on information contained in the draft EA and HCP. The final determination will be made no sooner than 30 days from the date of this notice. This notice is provided pursuant to Section 10 of the Act and NEPA regulations (40 CFR 1506.6).

The Service specifically requests information, views, and opinions from the public via this Notice on the federal action, including the identification of any other aspects of the human environment not already identified in the Service's draft EA. Further, the Service is specifically soliciting information regarding the adequacy of the HCP as measured against the Service's ITP issuance criteria found in 50 CFR parts 13 and 17.

If you wish to comment, you may submit comments by any one of several methods. You may mail comments to the Service's Regional Office (see **ADDRESSES**). You may also comment via the internet to ''david_dell@fws.gov''. Please submit comments over the internet as an ASCII file avoiding the use of special characters and any form of encryption. Please also include your name and return address in your internet message. If you do not receive a confirmation from the Service that we have received your internet message, contact us directly at either telephone number listed below (see **FURTHER INFORMATION**). Finally, you may hand deliver comments to either Service office listed below (see **ADDRESSES**). Our practice is to make comments, including names and home addresses of respondents, available for public review

during regular business hours. Individual respondents may request that we withhold their home address from the administrative record. We will honor such requests to the extent allowable by law. There may also be other circumstances in which we would withhold from the administrative record a respondent's identity, as allowable by law. If you wish us to withhold your name and address, you must state this prominently at the beginning of your comments. We will not; however, consider anonymous comments. We will make all submissions from organizations or businesses, and from individuals identifying themselves as representatives or officials of organizations or businesses, available for public inspection in their entirety.

DATES: Written comments on the ITP application, draft EA, and HCP should be sent to the Service's Regional Office (see **ADDRESSES**) and should be received on or before July 3, 2000.

ADDRESSES: Persons wishing to review the application, HCP, and EA may obtain a copy by writing the Service's Southeast Regional Office, Atlanta, Georgia. Documents will also be available for public inspection by appointment during normal business hours at the Regional Office, 1875 Century Boulevard, Suite 200, Atlanta, Georgia 30345 (Attn: Endangered Species Permits), or Field Supervisor, U.S. Fish and Wildlife Service, Post Office Box 2676, Vero Beach, Florida 32961–2676. Written data or comments concerning the application, or HCP should be submitted to the Regional Office. Requests for the documentation must be in writing to be processed. Please reference permit number TE026007–0 in such comments, or in requests of the documents discussed herein.

FOR FURTHER INFORMATION CONTACT: Mr. David Dell, Regional HCP Coordinator, (see **ADDRESSES** above), telephone: 404/679–7313, facsimile: 404/679–7081; or Mr. Mike Jennings, Fish and Wildlife Biologist, South Florida Field Office, Vero Beach, Florida (see **ADDRESSES** above), telephone: 561/562–3909.

SUPPLEMENTARY INFORMATION: The scrub-jay is geographically isolated from other species of scrub-jays found in Mexico and the Western United States. The scrub-jay is found exclusively in peninsular Florida and is restricted to xeric uplands (predominately in oak dominated scrub). Increasing urban and agricultural development have resulted in habitat loss and fragmentation which has adversely affected the distribution and numbers of scrub-jays. The total estimated population is between 7,000 and 11,000 individuals.

The decline in the number and distribution of scrub-jays in eastern Florida has likely been greater than in most regions of the State. Eastern coastal Florida has experienced tremendous urban growth in the past 50 years and much of this commercial and residential development has occurred on the dry soils which historically supported scrub-jay habitat. Based on existing soils data, much of the historic and current scrub-jay habitat of coastal east Florida occurs along a narrow stretch of historic sand dunes that are situated on a north-south axis from Dade to Flagler County. Much of this area of Florida was settled early because few wetlands restricted urban and agricultural development. Due to the effects of urban and agricultural development over the past 100 years, much of the remaining scrub-jay habitat is now relatively small and isolated. What remains is largely degraded due to the exclusion of fire which is needed to maintain xeric uplands in conditions suitable for scrub-jays.

Remnant patches of suitable scrub-jay habitat remain in northern Indian River County, particularly within the large residential subdivision of Sebastian Highlands. Seven families of scrub-jay are known to persist in 317 single-family residential lots. Scrub-jays within Sebastian Highlands are part of a larger complex of scrub-jays that occupy xeric uplands of eastern coastal Florida. This complex of scrub-jay families (metapopulation) ranges from central Brevard County south to northern Indian River County and represents one of the largest metapopulations of scrub-jays remaining in the State. Scrub-jays within Sebastian Highlands represent the southern-most distribution of this metapopulation. The continued survival of scrub-jays in this metapopulation will depend on the maintenance of suitable habitat and the restoration of unsuitable habitat in key locations.

Scrub-jay use of Sebastian Highlands has been reported periodically since 1991. Early surveys documented the presence of about 26 families of scrub-jays in and near Sebastian Highlands. Since that time there has been a steady decline in the numbers and distribution of scrub-jays in northern Indian River County. Habitat degradation and continued habitat fragmentation are believed responsible for this decline. Scrub-jays currently occupy about 79 acres within Sebastian Highlands subdivision.

The Applicants recognize that the conservation of scrub-jays and fulfillment of existing land-use plans which call for residential infill within Sebastian Highlands cannot reasonably be achieved on a lot-by-lot basis through existing regulatory mechanisms. As a result, the Applicants jointly agreed to address the conservation needs of this species through preparation of an HCP for northern Indian River County.

Land clearing permits issued by the City of Sebastian in preparation for residential, commercial, or School Board construction will destroy habitat and result in death of, or injury to, scrub-jays, incidental to the carrying out of these otherwise lawful activities. Habitat alteration associated with the proposed residential development will reduce the availability of feeding, nesting, sheltering habitat for scrub-jays. About 79 acres of habitat currently occupied by scrub-jays is expected to be destroyed incrementally as residential build-out occurs in Sebastian Highlands over the next 30 years. Another 92 acres encompassing city-owned commercial property and School Board property may also result in the take of scrub-jays. However, these sites are not currently occupied by scrub-jays and would only become so due to conservation measures proposed in the HCP. These interim conservation measures could provide habitat for scrub-jays until such time that demand for commercial facilities or school expansion are necessary. If these sites are managed well in the interim and scrub-jay subsequently recolonize them, future take may occur during construction activities.

The Applicant's HCP and the Service's EA describe the following minimization and mitigation strategy to be employed by the Applicants to offset the impacts of the Project to the scrub-jay:

- The Applicants agree to perpetually preserve and manage about 324 acres of scrub-jay habitat in northern Indian River County in a manner that will create a mosaic of habitats suitable for this species.
- The Applicants agree to perpetually preserve and manage about 253 acres of unsuitable scrub-jay habitat for use as buffers areas and dispersal corridors for the scrub-jay.
- The Applicants agree to restore and manage 92 acres of potentially suitable scrub-jay habitat on an interim basis, until such time that demand for commercial facilities and/or school expansion require construction within these areas.

The EA considers the environmental consequences of two action alternatives which would require issuance of an ITP. The no action alternative (not issue the ITP) will ultimately result in loss of

scrub-jay habitat within the Project site due to habitat degradation. The no action alternative may also expose the Applicants under Section 9 of the Act. The preferred alternative would affect about 79 acres of occupied scrub-jay habitat and possibly 92 acres of currently unoccupied but restorable habitat, while protecting and enhancing 324 acres of occupied habitat and unoccupied but restorable habitat in northern Indian River County. With management of habitat, existing conditions are expected to improve over the long-term for scrub-jays in northern Indian River County.

As stated above, the Service has made a preliminary determination that the issuance of the ITP is not a major Federal action significantly affecting the quality of the human environment within the meaning of section 102(2)(C) of NEPA. This preliminary information may be revised due to public comment received in response to this notice and is based on information contained in the draft EA and HCP.

The Service will also evaluate whether the issuance of a section 10(a)(1)(B) ITP complies with section 7 of the Act by conducting an intra-Service section 7 consultation. The results of the biological opinion, in combination with the above findings, will be used in the final analysis to determine whether or not to issue the ITP.

Dated: May 25, 2000.

H. Dale Hall,

Acting Regional Director.

[FR Doc. 00–13655 Filed 5–31–00; 8:45 am]

BILLING CODE 4310–55–P

DEPARTMENT OF THE INTERIOR

Fish and Wildlife Service

Notice of Availability, Draft Assessment Plan

AGENCY: Fish and Wildlife Service, Department of the Interior.

ACTION: Notice of Availability.

SUMMARY: The U.S. Fish and Wildlife Service (Service), on behalf of the Department of the Interior (DOI), as a natural resource trustee, announces the release for public review of the Draft Assessment Plan (AP) for the Natural Resource Damage Assessment and Restoration of the August 27, 1998, Clinch River Chemical Spill. The Draft AP describes the DOI's proposal to assess natural resources injured as a result of chemical spill in the Clinch River in Tazewell County, Virginia.

DATES: Written comments must be submitted on or before July 1, 2000.

ADDRESSES: Requests for copies of the Draft AP may be made to: Susan Lingenfelser, Ph.D., U.S. Fish and Wildlife Service, Virginia Field Office, 6669 Short Lane, Gloucester, Virginia 23061.

Written comments or materials regarding the Draft AP should be sent to the same address.

FOR FURTHER INFORMATION CONTACT: Susan Lingenfelser, Ph.D., Environmental Contaminants Branch, U.S. Fish and Wildlife Service, Virginia Field Office, 6669 Short Lane, Gloucester, Virginia 23061. Interested parties may also call (804) 693–6694. Ext. 113, or send e-mail to susan_lingenfelser@fws.gov for further information.

SUPPLEMENTARY INFORMATION: On August 27, 1998, a tanker truck overturned on U.S. Route 460 in Tazewell County, Virginia. The truck released approximately 1,250 gallons of Octocure 554-revised, a rubber accelerant, into an unnamed tributary about 500 feet from its confluence with the Clinch River. The spill turned the river a snowy white color and appeared to have killed most aquatic organisms, including three species of federally listed endangered mussels, for at least 6.6 miles downstream.

Under the authority of the Comprehensive Response, Compensation and Liability Act of 1980, as amended (CERCLA), ''natural resource trustees may assess damages to natural resources resulting from a discharge of oil or a release of a hazardous substance * * * and may seek to recover those damages.'' Natural resource damage assessments are separate from the cleanup actions undertaken at a hazardous waste or spill site, and provide a process whereby the natural resource trustees can determine the proper compensation to the public for injury to natural resources. The natural resource damage assessment process seeks to: (1) Determine whether injury to, or loss of, trust resources has occurred: (2) ascertain the magnitude of the injury or loss: (3) calculate the appropriate compensation for the injury, including the cost of restoration; and (4) develop a restoration plan that will restore, rehabilitate, replace, and/or acquire equivalent resources for those resources that were injured or lost.

The Draft AP presents the trustee's approaches for determining the quantifying natural resource injuries and calculating the damages associated with those injuries. By developing an Assessment Plan, the trustee can ensure that the natural resource damage assessment will be completed at a reasonable cost relative to the magnitude of damages. this Assessment Plan presents proposed assessment methodologies to potentially responsible parties, other trustees, affected agencies, and to the public, so that these groups can productively participate in the assessment process. The Draft AP is being released in accordance with the Natural Resource Damage Assessment Regulations found at Title 43 of the Code of Federal Regulation Part II.

Interested members of the public are invited to review and comment on the Draft AP. Copies of the Draft AP are available from the U.S. Fish and Wildlife Service's Virginia Field Office at 6669 Short Lane, Gloucester, Virginia 23061. Additionally the Draft AP is available for review at the Tazewell County Main Library, 310 East Main Street. Tazewell, Virginia 24651 and the Tazewell County Library, Richlands Branch, 102 Suffolk Avenue, Richlands, Virginia 24641. All comments received on the Draft AP will be considered and a response provided either through revision of this Draft AP and incorporation into the Final Assessment Plan, or by letter to the commentor.

Author

The primary author of this notice is Susan Lingenfelser, Ph.D., U.S. Fish and Wildlife Service, Virginia Field Office at 6669 Short Lane, Gloucester, Virginia 23061.

Authority: The authority for this action is the Comprehensive Environmental Response. Compensation and Liability Act of 1980, as amended (''CERCLA''), 42 U.S.C.

Dated: May 22, 2000.

Mamie A. Parker,

Acting Regional Director, Region 5, U.S. Fish and Wildlife Service.

[FR Doc. 00–13614 Filed 5–31–00; 8:45 am]

BILLING CODE 4310–55–M

DEPARTMENT OF THE INTERIOR

Fish and Wildlife Service

Issuance of Right-of-Way Permit

AGENCY: Fish and Wildlife Service, Interior.

ACTION: Notice.

SUMMARY: This notice advises the public that the Fish and Wildlife Service will issue a right-of-way permit to Petroleum Properties Corporation for the construction of a 20-inch underground natural gas pipeline on lands of the Sutter National Wildlife Refuge in

Sutter County, California, described as follows: Mount Diablo Meridian, Township 14 N, Range 2 E, Section 9. The right-of-way would run about 0.1 to 0.2 miles south of Hughes Road.

DATES: The permit will be issued within 30 days of June 1, 2000.

FOR FURTHER INFORMATION CONTACT: Anne Cullen, Division of Realty, 911 NE 11th Avenue, Portland, Oregon, 97232–4181, telephone (503) 231–6201.

Dated: May 25, 2000.

Carolyn A. Bohan,

Acting Regional Director, Portland, Oregon.

[FR Doc. 00–13657 Filed 5–31–00; 8:45 am]

BILLING CODE 4310–55–P

DEPARTMENT OF THE INTERIOR

Bureau of Indian Affairs

Final Programmatic Environmental Impact Statement for the Proposed Navajo Ten-Year Forest Management Plan, Navajo Nation, Arizona/New Mexico

AGENCY: Bureau of Indian Affairs, Interior.

ACTION: Notice; Reopening of comment period.

SUMMARY: This notice reopens the public comment period published in the **Federal Register** on May 12, 2000 (65 FR 30605) for the Final Programmatic Environmental Impact Statement (FPEIS) for the Proposed Navajo Ten-Year Forest Management Plan, Navajo Nation, Arizona/New Mexico. The new public comment period closes on June 30, 2000. Except for the closing date for the public comment period, the information on the FPEIS published in the **Federal Register** on April 14, 2000 (65 FR 20197) remains unchanged.

DATES: The date by which written comments must arrive is June 30, 2000.

FOR FURTHER INFORMATION CONTACT: Harold D. Russell, (520) 729–7228.

Dated: May 25, 2000.

Kevin Gover,

Assistant Secretary—Indian Affairs.

[FR Doc. 00–13661 Filed 5–31–00; 8:45 am]

BILLING CODE 4310–01–P

DEPARTMENT OF THE INTERIOR

Bureau of Indian Affairs

Amendment to Pueblo of Laguna Liquor Control Ordinance

AGENCY: Bureau of Indian Affairs, Interior.

ACTION: Notice.

SUMMARY: This Notice is published in accordance with authority delegated by the Secretary of the Interior to the Assistant Secretary—Indian Affairs by 209 DM 8, and in accordance with the Act of August 15, 1953, 67 Stat. 586, 18 U.S.C. 1161, as interpreted by the Supreme Court in *Rice* v. *Rehner*, 463 U.S. 713 (1983). I certify that Resolution No. 49–99 of the Pueblo of Laguna was duly adopted by the Pueblo of Laguna Tribal Council on August 11, 1999. This Amendment to the Pueblo of Laguna Liquor Control Ordinance regulates the issuance of licenses for the sale of alcohol beverages in package or by the drink for consumption on the premises and for the sale of liquor on Sunday or any tribal, state or federal election day to the same extent authorized by the State of New Mexico.

DATES: This Amendment is effective as of June 1, 2000.

FOR FURTHER INFORMATION CONTACT: Jim D. James, Office of Tribal Services, 1849 C Street, NW, MS–4660–MIB, Washington, DC 20240–4001; telephone (202) 208–4400.

SUPPLEMENTARY INFORMATION: The amendments to the Pueblo of Laguna Liquor Control Ordinance, Resolution No. 49–99, shall read as follows:

Section 5 (C): ''Authorized sales. Liquor may be sold in package or by the drink for consumption on the premises as determined in the sole discretion of the Tribal Council. The license or permit issued shall state whether the license or permit authorizes package sales and/or liquor by the drink sales and if the permit authorizes liquor by the drink whether or not the license is limited to a particular type or types of liquor,'' and;

Section 5 (E): ''Sunday and Election Day Sales. Sale of liquor may be allowed on Sunday or any tribal, state or federal election day to the same extent authorized by the State of New Mexico. No sales should be allowed on any day or any time determined by the Tribal Council that liquor sales shall be prohibited.''

Dated: May 23, 2000.

Kevin Gover,

Assistant Secretary—Indian Affairs.

[FR Doc. 00–13612 Filed 5–31–00; 8:45 am]

BILLING CODE 4310–02–P

DEPARTMENT OF THE INTERIOR

Bureau of Indian Affairs

Amendment to Stockbridge-Munsee Community Band of Mohican Indians Liquor Control Ordinance

AGENCY: Bureau of Indian Affairs, Interior.

ACTION: Notice.

SUMMARY: This Notice is published in accordance with authority delegated by the Secretary of the Interior to the Assistant Secretary—Indian Affairs by 209 DM 8, and in accordance with the Act of August 15, 1953, 67 Stat. 586, 18 U.S.C. 1161, as interpreted by the Supreme Court in *Rice* v. *Rehner*, 463 U.S. 713 (1983). I certify that Resolution No. 058–99 and Resolution No. 074–99 of the Stockbridge-Munsee Community Band of Mohican Indians were duly adopted by the Stockbridge-Munsee Tribal Council on September 7, 1999 and November 2, 1999, respectively. These Amendments to the Stockbridge-Munsee Liquor Control Ordinance, published on December 11, 1992 (57 FR 58938) with an amendment on May 13, 1998 (63 FR 26621), regulate the issuance of licenses for the sale of alcohol beverages within buildings used for casinos, entertainment facilities, convenience stores, special outdoor events and restaurant-bar operations, including the sale of beer for consumption on the golf course owned and regulated by the Stockbridge-Munsee Community.

DATES: This Amendment is effective as of June 1, 2000.

FOR FURTHER INFORMATION CONTACT: Jim D. James, Office of Tribal Services, 1849 C Street NW, MS 4660–MIB, Washington, DC 20240–4001; telephone (202) 208–4400.

SUPPLEMENTARY INFORMATION: The amendment to the Stockbridge-Munsee Liquor Control Ordinance shall read as follows:

Section 31.1 (A) ''Licenses for the sale of alcohol beverages may be issued for sale of such beverages for casinos, entertainment facilities, convenience stores and restaurant-bar operations owned and regulated by the Stockbridge-Munsee Community. This license includes sales for special outdoor events and the sale of beer for consumption on the golf course.''

Dated: May 22, 2000.

Kevin Gover,

Assistant Secretary—Indian Affairs.

[FR Doc. 00–13611 Filed 5–31–00; 8:45 am]

BILLING CODE 4310–02–P

DEPARTMENT OF THE INTERIOR

Bureau of Land Management

[AK–(962)–1410–HY–P]

Alaska: Notice for Publication, F–14908–B; Alaska Native Claims Selection

In accordance with Departmental regulation 43 CFR 2650.7(d), notice is hereby given that the modified decision to issue conveyance to Sitnasuak Native Corporation, notice of which was published in the **Federal Register** on October 22, 1999, is hereby vacated in part.

A notice, of the modified decision being vacated in part, will be published once a week, for four (4) consecutive weeks, in the Nome Nugget. Copies of the decision may be obtained by contacting the Alaska State Office of the Bureau of Land Management, 222 West Seventh Avenue, #13, Anchorage, Alaska 99513–7599.

Any party claiming a property interest which is adversely affected by the decision, an agency of the Federal government, or regional corporation, shall have until July 3, 2000 to file an appeal on the issues in the modified DIC. However, parties receiving service by certified mail shall have 30 days from the date of receipt to file an appeal. Appeals must be filed in the Bureau of Land Management at the address identified above, where the requirements for filing an appeal may be obtained. Parties who do not file an appeal in accordance with the requirements in 43 CFR part 4, subpart E, shall be deemed to have waived their rights.

Except as vacated in part, the modified decision, notice of which was given October 22, 1999, is final.

Jane Miller,

Land Law Examiner, Branch of ANCSA Adjudication.

[FR Doc. 00–13658 Filed 5–31–00; 8:45 am]

BILLING CODE 4310–$$–P

DEPARTMENT OF THE INTERIOR

Bureau of Land Management

[CA–320–1820–XQ]

Notice of Resource Advisory Council Meeting

AGENCY: Bureau of Land Management, Northeast California Resource Advisory Council, Alturas, California, DOI.

ACTION: Notice of meeting.

SUMMARY: Pursuant to the authorities in the Federal Advisory Committees Act (Public Law 92–463) and the Federal Land Policy and Management Act (Public Law 94–579), the U.S. Bureau of Land Management's Northeast California Resource Advisory Council will meet Wednesday and Thursday, June 28 and 29, 2000, at the Veterans Memorial Hall, 500 Main St., Alturas, California. On Wednesday, the council will tour the Cedar Creek project area, and on Thursday, the council convenes in a regular business session. Both the tour and meeting are open to the public. Members of the public attending the tour must provide their own four-wheel-drive transportation and beverages. A barbecue lunch will be available for a fee.

SUPPLEMENTARY INFORMATION: Members of the council and interested members of the public will meet at Wednesday at 9 a.m. at the Likely Fire Station in Likely, California, and depart immediately for the tour. The group will complete the tour and return to Alturas, California by about 6 p.m.

On Thursday, the meeting begins at 8 a.m. Agenda items include discussion of the BLM's development of an off-highway vehicle management strategy, review of off-highway vehicle guidelines developed by a RAC subcommittee, discussion of juniper management, review of BLM-California's proposed landscape publications, and discussion of emerging issues for the BLM. Time will be set aside for public comments at 10:45 a.m. Members of the public interested in off-highway vehicle management on public lands are encouraged to attend the meeting to provide comments to the advisory council, which will be forwarding comments to BLM's leadership. These public comments will help the BLM develop a resource management strategy for management of off highway vehicle use. The strategy will recognize the interests of OHV users, while providing resource protection. Depending on the number of persons wishing to speak, a time limit may be established.

FOR FURTHER INFORMATION CONTACT: Tim Burke, Alturas field manager, (530) 233–4666, or Public Affairs Officer Jeff Fontana at (530) 257–5381.

Joseph J. Fontana,

Public Affairs Officer.

[FR Doc. 00–13692 Filed 5–31–00; 8:45 am]

BILLING CODE 4310–40–P

INTERNATIONAL TRADE COMMISSION

[USITC SE–00–024]

Sunshine Act Meeting

AGENCY HOLDING THE MEETING: International Trade Commission.

TIME AND DATE: June 9, 2000 at 2:30 p.m.

PLACE: Room 101, 500 E Street SW, Washington, DC 20436, Telephone: (202) 205–2000.

STATUS: Open to the public.

MATTERS TO BE CONSIDERED: 1. Agenda for future meeting: None.

2. Minutes.

3. Ratification List.

4. Inv. No. 731–TA–847 and 850 (Final) (Seamless Carbon and Alloy Steel Standard, Line, and Pressure Pipe and Tube from Japan and South Africa)—briefing and vote. (The Commission will transmit its determination to the Secretary of Commerce on June 16, 2000.).

5. Outstanding action jackets: None.

In accordance with Commission policy, subject matter listed above, not disposed of at the scheduled meeting, may be carried over to the agenda of the following meeting.

Issued: May 25, 2000.

By order of the Commission.

Donna R. Koehnke,

Secretary.

[FR Doc. 00–13804 Filed 5–30–00; 10:18 am]

BILLING CODE 7020–02–U

INTERNATIONAL TRADE COMMISSION

[USITC SE–00–023]

Sunshine Act Meeting

AGENCY HOLDING THE MEETING: International Trade Commission.

TIME AND DATE: June 5, 2000 at 2 p.m.

PLACE: Room 101, 500 E Street SW, Washington, DC 20436, Telephone: (202) 205–2000.

STATUS: Open to the public.

MATTERS TO BE CONSIDERED:

1. Agenda for future meeting: None.

2. Minutes.

3. Ratification List.

4. Inv. No. 731–TA–851 (Final) (Synthetic Indigo from China)—briefing and vote. (The Commission will transmit its determination to the Secretary of Commerce on June 12, 2000.).

5. Outstanding action jackets: None.

In accordance with Commission policy, subject matter listed above, not disposed of at the scheduled meeting,

may be carried over to the agenda of the following meeting.

Issued: May 25, 2000.

By order of the Commission.

Donna R. Koehnke,

Secretary.

[FR Doc. 00–13805 Filed 5–30–00; 10:18 am]

BILLING CODE 7020–02–U

INTERNATIONAL TRADE COMMISSION

[USITC SE–00–022]

Sunshine Act Meeting

AGENCY HOLDING THE MEETING: International Trade Commission.

TIME AND DATE: June 2, 2000 at 11:00 a.m.

PLACE: Room 101, 500 E Street SW., Washington, DC 20436, Telephone: (202) 205–2000.

STATUS: Open to the public.

MATTERS TO BE CONSIDERED:

1. Agenda for future meeting: None.
2. Minutes.
3. Ratification List.
4. Inv. No. 731–TA–853 (Final) (Structural Steel Beams from Japan)—briefing and vote. (The Commission will transmit its determination to the Secretary of Commerce on June 9, 2000.)
5. Inv. Nos. AA1921–143 and 731–TA–341, 343–345, 391–397, and 399 (Review) (Certain Bearings from China, France, Germany, Hungary, Italy, Japan, Romania, Singapore, Sweden, and the United Kingdom)—briefing and vote. (The Commission will transmit its determination to the Secretary of Commerce on June 16, 2000.)
6. Outstanding action jackets: None.

In accordance with Commission policy, subject matter listed above, not disposed of at the scheduled meeting, may be carried over to the agenda of the following meeting.

Issued: May 23, 2000.

By order of the Commission.

Donna R. Koehnke,

Secretary.

[FR Doc. 00–13808 Filed 5–30–00; 10:17 am]

BILLING CODE 7020–02–U

DEPARTMENT OF JUSTICE

National Institute of Corrections

Solicitation for a Cooperative Agreement—Videotape: Community Education on Jails

AGENCY: National Institute of Corrections, Department of Justice.

ACTION: Solicitation for a cooperative agreement.

SUMMARY: The National Institute of Corrections, Jail Division, is seeking applications for the development of a broadcast quality videotape on the basic issues, functions, and roles common to local jails.

Background

Historically, jails have functioned in relative obscurity within their own communities. Although the community may generally acknowledge the need for a jail, the jail itself is ignored; kept out of sight and out of mind. The community wants only to know that dangerous criminals are removed from the streets and locked away. And, although jail practitioners decry the community's lack of knowledge, they have done little to remedy this. Traditionally, jail administrators have focused to intently on their internal role in the jail that they have neglected their role external to the jail—fostering public understanding of and involvement with jail issues and operations. As a result, jails, which should be viewed as a community service, are, in fact, isolated from their communities.

As a result of this isolation, the public shapes its perceptions of the jail, staff, and inmates from negative images presented in film and television drama. Jails are portrayed as dirty and dangerous, and jail staff as lazy, incompetent, and meanspirited. Inmates are portrayed as either dangerous and inhuman or valiant warriors against the system. This unflattering perception is then compounded if negative events force the jail to the forefront of the news.

The jail's isolation does a disservice to the community and to the jail itself. The jail belongs to the community and should reflect the community's values, both in its role in the criminal justice system and in its internal operations. This, however, is not possible if the community has no understanding of the jail, and no inclination to learn, given the negative image it has. When local government officials do not understand the role of the jail and the complexity of its operations, they are likely to underfund even basic functions, often creating dangerous and unhealthy conditions in the facility and putting the community at risk. This, then, leads to a high degree of liability, and the local government may find itself the target of a costly lawsuit. Jails struggle to find and retain qualified staff, but recruiting quality staff is close to impossible when the jail is viewed as a most undesirable work environment. The inadequate staffing levels and the poorly qualified staff in many jails only compound liability issues.

Project Objectives

A primary remedy for the problems faced by jails is public education. This videotape will be a highly effective tool for jail administrators and sheriffs embarking on an education program for the community. The video format will be a visual counterpoint to existing public perceptions, providing specific information about the role and operation of the jail, the work and commitment of the staff, and the identity and needs of the inmates. The video format will also allow the message to be portrayed easily to various community members, including business people, educators, local officials, and general community groups. The videotape will provide the foundation for the efforts of sheriffs and jail administrators to inform the public about jails generally, their jail specifically, and the need for community involvement in the jail.

Scope of Work

Videotape Length: About 30 minutes.

Videotape Audience: Local community members and local officials.

Use of Videotape: The videotape will be used as a tool to educate its audience about local jails. It will be shown to local community members and local officials. Sheriffs and jail administrators will use the videotape as a foundation to inform the audience about jails generally, their jails specifically, and the need for community involvement in the jail.

Videotape Distribution: NIC expects to widely distribute the videotape. It will be made available, upon request and free of charge, through the NIC Information Center. Local officials, detention practitioners, professional corrections organizations, private corrections consultants, and professionals in related fields will be able to request the use of this videotape.

Videotape Content: The videotape will provide specific information about the role and operations of jails, introducing some differences among jails in the United States and highlighting the things that all jails have in common. These commonalities include basic functions, complexity of operations, and chronic needs and problems. The videotape will also provide information about the work of jail staff and the characteristics of inmates. It will illustrate information through professional narration, interviews, graphics, animation, scenes from jails, and/or other strategies

designed to most effectively demonstrate concepts.

Project Description: The production company will see the videotape production through from beginning to end. The company is expected to provide the staff, equipment, and other resources necessary to script-writing, directing, producing, filming, off-line editing, on-line editing, and all other activities necessary to videotape production.

The production company is asked to assign one staff to oversee the project and work closely with NIC staff on all phases of videotape production. NIC staff must review and approve the treatment, scripting, creative ideas, filming sites, shooting days, persons interviewed, music, graphics, animation, editing, and screening dates. NIC staff will have all editing rights and final approval of rough drafts. NIC staff will accompany the film crew to at least two of the filming sites.

In general, NIC staff will work closely with the production company throughout the project to make sure personnel understand the role of the local jail and that information is portrayed accurately in every detail of the videotape. NIC staff will be available to the production company to assist with questions or problems that arise. It is important, therefore, that the production company staff are readily available for in-person meetings with NIC staff, some at short notice.

This project will require research to locate historic photographs and footage to illustrate changes in conditions and requirements for local jails. This project will also require travel to film at up to five jail sites. These sites will be determined by NIC staff, and will be located throughout the United States, including the Northeast, Southeast, Midwest, Southwest, and West. At each site, filming will include exterior views of the jail, various interior views of the jail, and interviews with up to eight individuals, including county commissioners, judges, sheriffs, jail administrators, jail staff, and community members. NIC staff will coordinate the filming with each jail site. Filming at each site may require 2–3 days, not including travel time. In addition, this project will require filming of up to four interviews in Longmont, Colorado.

The production company will videotape in betacam or digital format. Once the videotape is completed, the production company will provide NIC one broadcast quality (betacam or digital) master, 100 copies of the tape in VHS format, with sleeves and coded with the Department of Justice seal, and one digitized videotape for broadcast, on CD ROM, to be placed on the NIC web page. All videotape used in this production is the property of the U.S. Government and is to be delivered to NIC upon completion of this project.

Production Schedule: The list below shows the major activities required to complete the project. Videotape production will begin upon award of this agreement and must be completed ten months after the award date. The schedule for completion of activities should include the following, at a minimum.

- Production company's kickoff meeting with NIC staff for a project overview;
- Production company's review of materials provided by NIC;
- Production company's research of roles and functions of jails;
- Production company's tour of a jail (arranged through NIC staff);
- NIC project staff develops an outline of key concepts to be included in videotape with suggestions for illustrating;
- Scripted treatment;
- Script written and presented to NIC for approval;
- Script revisions and NIC staff's final approval;
- Filming and interviews scheduled and coordinated with sites and NIC staff;
- Story board developed and presented to NIC staff for review;
- Story board revisions and NIC staff's final approval;
- Filming;
- Off-line editing;
- Screening of off-line edit by production company and NIC staff;
- On-line graphics/animation planned, then presented to and approved by NIC staff;
- On-line graphics/animation created;
- On-line narration reordered;
- On-line edit;
- On-line screening by production company and NIC staff;
- Review and approval of final edit by NIC staff;
- Final products delivered.

Authority: Public Law 93-415.

Funds Available

The award will be limited to $125,000 (direct and indirect costs) and project activity must be completed within ten months of the date of award. Funds may not be used for construction, or to acquire or build real property. This project will be a collaborative venture with the NIC Jails Division.

Application Procedures

Applications must be submitted in six copies to the Director, National Institute of Corrections, 320 First Street, NW, Room 5007, Washington, DC 20534. At least one copy of the application must have the applicant's original signature in blue ink. A cover letter must identify the responsible audit agency for the applicant's financial accounts.

Applications must be prepared according to the procedures given in the NIC Guideline Manual: Instructions for Applying for Federal Assistance and must be submitted on OMB Standard Form 424, Federal Assistance. The applications should be concisely written, typed double-spaced, and referenced to the project by the number and title given in this cooperative agreement announcement.

The narrative portion of this grant application should include, at a minimum:

- A brief paragraph that indicates the applicant's understanding of the purpose of the videotape and the issues to be addressed;
- A brief paragraph that summarizes the project goals and objectives;
- A clear description of the methodology that will be used to complete the project and achieve its goals;
- A statement or chart of measurable project milestones and time lines for the completion of each;
- A description of the staffing plan for the project, including the role of each project staff, the time commitment for each, the relationship among the staff (who reports to whom), and an indication that all required staff will be available;
- A description of the qualifications of the applicant organization and each project staff;
- A budget that details all costs for the project, shows consideration for all contingencies for this project, and notes a commitment to work within the budget proposed (budget should be divided into object class categories as shown on application Standard Form 424A).

Documentation of the principal's and associate's relevant knowledge, skills, and abilities to carry out the described tasks must be included in the application. The application must be accompanied by a resume of the applicant's work and a brief sample(s) of completed video productions. The applicant organization must specify its roles in the production of the sample videos.

Deadline for Receipt of Applications: Applications must be received by 4:00 p.m. on Monday, July 17, 2000. They should be addressed to Director, National Institute of Corrections, 320 First Street, NW, Room 5007,

Washington, DC 20534. Hand delivered applications should be brought to 500 First Street, NW, Washington, DC 20534. The front desk will call Bobbi Tinsley at (202) 307–3106, extension 0 for pickup.

Addresses and Further Information: Requests for the application kit should be directed to Judy Evens, Cooperative Agreement Control Office, National Institute of Corrections, 320 First Street, NW, Room 5007, Washington, DC 20534 or by calling 800–995–6423, ext. 159, 202–307–3106, ext. 159, or email: *jevens@bop.gov.* A copy of this announcement, application forms, and additional information may also be obtained through the NIC web site: http://www.nicic.org (click on ''What's New'' and ''Cooperative Agreements''). All technical and/or programmatic questions concerning this announcement should be directed to Kris Keller at 1960 Industrial Circle, Longmont, CO 80501, or by calling 800–995–6429, ext. 119 or 303–682–0382, ext. 119, or by email: *kdkeller@bop.gov.*

Eligibility Applicants: An eligible applicant is any state or general unit of local government, public or private agency, educational institution, organization, team, or individual with requisite skills to successfully meet the outcome objectives of the project.

Review Considerations: Applications received under this announcement will be subjected to a NIC three to five member Peer Review Process. Among the criteria used to evaluate the applications are:

- Indication of a clear understanding of the project requirements;
- Background, experience, and expertise of the proposed project staff, including any subcontractors;
- Previous video production experience with local jails;
- Effectiveness of the creative approach to the project;
- Clear, concise description of all elements and tasks of the project, with sufficient and realistic time frames necessary to complete the tasks;
- Technical soundness of project design and methodology;
- Financial and administrative integrity of the proposal, including adherence to federal financial guidelines and processes;
- Sufficiently detailed budget that shows consideration of all contingencies for this project and commitment to work within the budget proposed;
- Indication of availability to meet with NIC staff, possibly at short notice, at key points in videotape production (at a minimum, those listed under ''Project Description'').

Number of Awards: One (1).

NIC Application Number: 00J01 Videotape Community Education on Jails. This number should appear as a reference line in your cover letter and also in box 11 of Standard Form 424.

Catalog of Federal Domestic Assistance Number: 16.601

Dated: May 26, 2000.

Morris L. Thigpen,

Director, National Institute of Corrections.

[FR Doc. 00–13665 Filed 5–31–00; 8:45 am]

BILLING CODE 4410–36–M

DEPARTMENT OF JUSTICE

National Institute of Corrections

Solicitation for a cooperative agreement—Regional Meetings on Prison Workforce Issues

AGENCY: National Institute of Corrections, U.S. Department of Justice.

ACTION: Solicitation for a cooperative agreement.

SUMMARY: The Department of Justice (DOJ), National Institute of Corrections (NIC), announces the availability of funds in FY 2000 for a cooperative agreement to provide funding for conducting four regional one and a half (1½) day meetings to identify critical issues that impact the effectiveness of the prison workforce as well as innovative strategies to assist correctional departments in meeting their human resource needs.

Background

Baby Boomers, Generation X, and Gray Panthers are a few of the identified groups changing the profile of the workplace. With unprecedented growth in technology and high competition for workers, many correctional agencies are finding it increasingly difficult to recruit and retain staff. Even when staff are hired, there are a variety of differences in the work ethic of these workers. A number of systems have even been faced with building institutions and then having them sit idle because of lack of staff. In other instances, systems have expanded so rapidly that staff with minimal or limited experience are being ''prematurely promoted'' to manage this eclectic workforce. With these varying dilemmas impacting the prison workforce, it is imperative that agencies find out what is working and what is not regarding the human resource aspect of managing prison systems.

Private industry and other government entities are likewise facing challenges in a variety of workforce areas. Some have implemented innovative approaches (such as training contracts, paid educational advancement, etc.) that are providing at least somewhat successful. Learning how to identify and implement innovative strategies for today's workforce, and especially recommendations for 24-hour operations located in rural settings, is the goal of these discussion or ''focus'' groups.

A total of $79,600 is reserved for this project which will support one cooperative agreement for a 9 month period. The recipient of the award will be selected through a competitive solicitation process. BeLinda Watson Barney is the designated NIC project manager.

Project Scope: The goals of this cooperative agreement include the following:

- Identification and selection of sites for the four (4) regional meetings.
- Manage all logistical planning for the four (4) regional meetings and manage on-site logistics.
- Identify a format, discussion points and facilitators for the discussion groups.
- Identify potential participants for the discussion groups.
- Develop a summary report of the findings from the regional meetings.

All work on this project will be done in collaboration with NIC who will retain final approval on all aspects of these meetings. All travel for meetings will be funded, arranged and managed by the recipient of this award.

Specific Requirements: The successful applicant will propose a project approach that will ensure accomplishment of each of the stated goals of this project. At a minimum, the following requirements will be met in pursuit of the stated goals:

- Selection of participants that include corrections, other government and private sector representatives who can contribute to a discussion of how to address workforce issues in corrections or who can provide examples of innovative strategies used in their own sector.
- Focus of the discussion should be in identifying solutions (as opposed to listing problems).
- Compilation of findings and summary of issues raised at the regional meetings, including recommendations for further work/assistance by NIC.
- Coordination with the NIC project director at critical points in project development and as necessary to ensure clarity and accomplishments of goals and a satisfactory outcome.

Additional, specific requirements related to the training package are as follows:

Following review in draft form by the project coordinator, the summary report must be professionally edited and submitted in camera-ready hard copy and 3.5'' computer disk or zip drive disk using WordPerfect 7.0 or higher software for use with IBM compatible computers with Windows operating systems.

It will be the responsibility of the award recipient to secure written approval to use any copyrighted materials or photographs and to provide the original approval with the documents.

Authority: Public Law 93–415.

Funds Available: The award will be limited to a maximum of $79,600 (direct and indirect costs) and project activity must be completed within 9 months of the date of award. Funds may not be used for construction, or to acquire or build real property. This project will be a collaborative venture with the NIC Prisons Division.

Application Requirements: Applicants are required to submit a proposal that specifically defines their plan for meeting the goals and objectives of this project. The proposal must: provide a detailed plan that describes the methodology to be used in pursuing the project goals, including a timetable for accomplishment of objectives and criteria for selection of work group participants; demonstrate a knowledge of current workforce issues in the public and private sectors, including an awareness of agencies or organizations that have implemented innovative workforce strategies; and identify project staff who have made a commitment of time to this project and the specific skills they possess that will support the endeavors of the project. The conceptual framework of the proposal must demonstrate the applicants understanding of the nature of government employment practices and specifically, those that pertain to the correctional workforce.

Funding for this project has been established at $79,600. The applicant must provide a budget and budget narrative that clearly identifies the allocation of funds for achievement of the goals of the cooperative agreement. The rationale for the expenditures must be provided in the budget narrative unless patently obvious in the proposal.

Deadline for Receipt of Applications: Applications must be received by 4:00 p.m., EDT, on Friday, June 30, 2000. They should be addressed to: Director, National Institute of Corrections, 320 First Street, NW, Room 5007, Washington, DC 20534. Hand delivered applications should be brought to 500 First Street, NW, Washington, DC 20534. The front desk will call Bobbi Tinsley at (202) 307–3106, extension 0 for pickup.

Addresses and Further Information: Requests for the application kit, should be directed to Judy Evens, Cooperative Agreement Control Office, National Institute of Corrections, 320 First Street, N.W., Room 5007, Washington, D.C. 20534 or by calling 800–995–6423, ext. 159, 202–307–3106, ext. 159, or email: jevens@bop.gov. A copy of this announcement and application forms may also be obtained through the NIC web site: http//www.nicic.org (click on ''What's New'' and ''Cooperative Agreements''). All technical and/or programmatic questions concerning this announcement should be directed to BeLinda Watson Barney at the above address or by calling 800–995–6423 or 202–307–1300, ext. 152, or by E-mail via bbarney@bop.gov.

Project Completion: The award recipient will be responsible to submit all required reports and corrections or revisions of materials in a timely manner. The project period is 9 months from the date of the award and the project will not be deemed to have been completed until a final draft is accepted by the project coordinator.

Eligible Applicants: An eligible applicant is any state or general unit of local government, public or private, educational institution, organization, team, or individual with the requisite skills to successfully meet the outcome objectives of the project.

Review Considerations: Applications received under this announcement will be subjected to an NIC 3 to 5 member Peer Review Process. It is anticipated that the award will be made within 60–90 days following the application due date.

Number of Awards: One (1).

NIC Application Number: 00P06 This number should appear as a reference line in your cover letter and also in box 11 of Standard Form 424.

Executive Order 12372: This program is subject to the provisions of Executive Order 12372. Executive Order 12372 allows States the option of setting up a system for reviewing applications from within their States for assistance under certain Federal programs. Applicants (other than Federally-recognized Indian tribal governments) should contact their State Single Point of Contact (SPOC), a list of which is included in the application kit, along with further instructions on proposed projects serving more than one State.

Catalog of Federal Domestic Assistance Number: 16.603.

Dated: May 25, 2000.

Morris L. Thigpen,

Director, National Institute of Corrections.

[FR Doc. 00–13666 Filed 5–31–00; 8:45 am]

BILLING CODE 4410–36–M

DEPARTMENT OF LABOR

Employment and Training Administration

Proposed Information Collection Request Submitted for Public Comment and Recommendations

ACTION: Notice.

SUMMARY: The Department of Labor, as part of its continuing effort to reduce paperwork and respondent burden conducts a preclearance consultation program to provide the general public and Federal agencies with an opportunity to comment on proposed and/or continuing collections of information in accordance with the Paperwork Reduction Act of 1995 (PRA95) [44 U.S.C. 3506(c)(2)(A)]. This program helps to ensure that requested data can be provided in the desired format, reporting burden (time and financial resources) is minimized, collection instruments are clearly understood, and the impact of collection requirements on respondents can be properly assessed. Currently, the Employment and Training Administration is soliciting comments concerning the proposed revision the information collection of the GPRA-Complaint Program Performance and Participant Outcomes Data System (OMB Control No. 1205–0392), now titled the Trade Act Participant Report.

A copy of the proposed information collection request (ICR) can be obtained by contacting the office listed below in the addressee section of this notice.

DATES: Written comments must be submitted to the office listed in the addressee section below on or before July 31, 2000.

ADDRESSES: Curtis K. Kooser, Program Analyst, Division of Trade Adjustment Assistance, Employment and Training Administration, U.S. Department of Labor, Room C–4318, 200 Constitution Ave., NW., Washington, DC 20210, telephone 202–219–4845, ext. 111 (this is not a toll-free number), FAX 202–219–5753, e-mail ckooser@doleta.gov.

SUPPLEMENTARY INFORMATION:

I. Background

On June 16, 1998, the Office of Management and Budget approved a GPRA-complaint performance and participant outcomes data system for the

Division of Trade Adjustment Assistance (DTAA); this system is now known as the Trade Act Participant Report (TAPR). States implemented the TAPR beginning with the first quarter of fiscal year 1999 (October through December, 1998), and have continued to collect and report data every quarter since then.

Because both Trade Adjustment Assistance (TAA) and Title III of the Job Training Partnership Act (JTPA) serve adult dislocated workers, the TAPR was modeled on the Standardized Program Information Report (SPIR) system used by the JTPA programs. The passage of the Workforce Investment Act of 1998 (WIA), which replaced JTPA, made substantial changes in Federal employment and training programs, including changes in the way participant data are defined, gathered, and reported.

II. Review Focus

The Department of Labor is particularly interested in comments which:

- Evaluate whether the proposed revision of information collection is necessary for the proper performance of the functions of the agency, including whether the information will have practical utility;
- Evaluate the accuracy of the agency's estimate of the burden of the proposed collection of information, including the validity of the methodology and assumptions used;
- Enhance the quality, utility, and clarity of the information to be collected; and
- Minimize the burden of the collection of information on those who are to respond, including through the use of appropriate automated, electronic, mechanical, or other technological collection techniques or other forms of information technology, *e.g.,* permitting electronic submissions of responses.

III. Current Actions

In order to maintain coordination and continuity with the dislocated worker program under Title One of WIA, and to make other improvements, DTAA is proposing revisions to the TAPR that make it substantially the same as the system to be used by the WIA programs. The major changes are the following:

1. The definitions of Race and Ethnicity are now compliant with the most recent OMB definitions.
2. Date for defining and judging outcomes for participants are now based upon Wage Record data rather than surveys of individuals program exiters. It is estimated that this will substantially reduce the reporting burden on the States.
3. Minor revisions in the sequence and definitions of some of the TAPR fields have been made in order to increase the degree of continuity with the new system to be used by the dislocated workers program under WIA Title I.
4. The format for reporting dates has been changed from MMDDYYYY to YYYYMMDD to conform with the new WIA-Based system.

Type of Review: Revision.
Agency: Employment and Training Administration.
Title: Trade Act Participant Reporrt (TAPR).
OMB Number: 1205–0392.
Affected Public: State governments.
Frequency: Quarterly.
Total Responses: 200 (50 per quarter).
Average Time per Response: 40 hours per quarter.
Estimated Total Burden Hours: 8,000.
Total Burden Cost (capital/startup): 0.
Total Burden Cost (operating/maintaining): $120,000.

Comments submitted in response to this comment request will be summarized and/or included in the request for Office of Management and Budget approval of the information collection request; they will also become a matter of public record.

Dated: May 25, 2000.

Edward A. Tomchick.

Director, Division of Trade Adjustment Assistance.

[FR Doc. 00–13613 Filed 5–31–00; 8:45 am]

BILLING CODE 4510–30–M

DEPARTMENT OF LABOR

Occupational Safety and Health Administration

[Docket No. ICR–1218–0108(2000)]

Ethylene Oxide (EtO) Standard (29 CFR 1910.1047); Extension of the Office of Management of Budget's (OMB) Approval of Information-Collection (Paperwork) Requirements

AGENCY: Occupational Safety and Health Administration (OSHA); Labor.

ACTION: Notice of an opportunity for public comment.

SUMMARY: OSHA solicits comments concerning the extension of the information-collection requirements contained in the Ethylene Oxide Standard (the ''EtO Standard'') (29 CFR 1910.1047).

Request For Comment

The Agency has a particular interest in comments on the following issues:

- Whether the information-collection requirements are necessary for the proper performance of the Agency's functions, including whether the information is useful;
- The accuracy of the Agency's estimate of the burden (time and costs) of the information-collection requirements, including the validity of the methodology and assumptions used;
- The quality, utility, and clarity of the information collected; and
- Ways to minimize the burden on employers who must comply; for example, by using automated or other technological information-collection and -transmission techniques.

DATES: Submit written comments on or before July 31, 2000.

ADDRESSES: Submit written comments to the Docket Office, Docket No. ICR–1218–0108(2000), Occupational Safety and Health Administration, U.S. Department of Labor, Room N–2625, 200 Constitution Avenue, NW, Washington, DC 20210; telephone: (202) 693–2350. Commenters may transmit written comments of 10 pages or less in length by facsimile to (202) 693–1648.

FOR FURTHER INFORMATION CONTACT: Todd R. Owen, Directorate of Policy, Occupational Safety and Health Administration, U.S. Department of Labor, Room N–3641, 200 Constitution Avenue, NW, Washington, DC; telephone: (202) 693–2444. A copy of the Agency's Information-Collection Request (ICR) supporting the need for the information-collection requirements in the EtO Standard is available for inspection and copying in the Docket Office, or you may request a mailed copy by telephoning Todd R. Owen at (202) 693–2444. For electronic copies of the ICR on the EtO Standard, contact OSHA on the Internet at *http://www.osha.gov.*

SUPPLEMENTARY INFORMATION:

I. Background

The Department of Labor, as part of its continuing effort to reduce paperwork and respondent burden, conducts a preclearance consultation program to provide the general public and Federal agencies with an opportunity to comment on proposed and continuing information-collection requirements in accordance with the Paperwork Reduction Act of 1995 (PRA–95) (44 U.S.C.(c)(2)(A)). This program ensures that information is in the desired format, reporting burden (time and costs) is minimal, collection instruments clearly understood, and OSHA's estimate of the information burden is correct. The Occupational Safety and Health Act of the 1970 (the

Act) authorizes information colelction by employers as necessary or appropriate for enforcement of the Act or for developing information regarding the causes and prevention of occupational injuries, illnesses, and accidents (29 U.S.C. 657).

The information-collection requirements specificied in the EtO Standard protect employees from the adverse health effects that may result from their exposure to EtO. The major information-collection requirements of the EtO Standard include notifying employees of their EtO exposures, implementing a written compliance program, providing examining physicians with specific information, ensuring that employees receive a copy of their medical-examination results, maintaining employees' exposure-monitoring and medical records for specific periods, and providing access to these records by OSHA, the National Institute for Occupational Safety and Health, the affected employees, and their authorized representatives.

II Proposed Actions

OSHA proposed to increase the existing burden-hour estimate, and to extend OMB's approval, of the collection-of-information (paperwork) requirements contained in the EtO Standard. The Agency is increasing its previous estimate, 50,300 hours, by 989 hours. This increase occurred because of the increase in the number of hospitals using EtO sterilizers. OSHA will summarize the commentss submitted in response to this notice, and will include this summary in the request to OMB to extend the approval of the information-collection requirements contained in the EtO Standard.

Type of Review: Extension of currently approved information-collection requirements.

Title: Ethylene Oxide Standard (29 CFR 1910.1047).

OMB Number: 1218–0108.

Affected Public: Business or other for-profit; Federal government; State, Local or Tribal government.

Number of Respondents: 5,782.

Frequency: On occasion.

Total Responses: 232,564.

Average Time per Response: Varies from 5 minutes to provide information to the examining physician to 10 hours to develop a compliance plan.

Estimated Total Burden Hours: 51,289.

Estimated Cost (Operation and Maintenance): $7,074,850.

III. Authority and Signature

Charles N. Jeffress, Assistant Secretary of Labor for Occupational Safety and Health, directed the prepreation of this notice. The authority for this notice is the Paperwork Reduction Act of 1995 (44 U.S.C. 3506) and Secretary of Labor's Order No 6–96 (62 FR 111).

Signed at Washington, D.C., on May 25, 2000.

Charles N. Jeffress,

Assistant Secretary of Labor.

[FR Doc. 00–13696 Filed 5–31–00; 8:45 am]

BILLING CODE 4510–26–M

DEPARTMENT OF LABOR

Occupational Safety and Health Administration

[Docket No. ICR–1218–0190 (2000)]

Electrical Power Generation, Transmission, and Distribution (29 CFR 1910.269) and Electrical Protective Equipment (29 CFR 1910.137)); Extension of the Office of Management and Budget's (OMB) Approval of an Information Collection (Paperwork) Request

AGENCY: Occupational Safety and Health Administration (OSHA); Labor.

ACTION: Notice of an opportunity for public comment.

SUMMARY: OSHA solicits comments concerning the proposed extension of the information collection requirements contained in the standards on Electrical Power Generation, Transmission, and Distribution, 29 CFR 1910.269, and Electrical Protective Equipment, 29 CFR 1910.137.

Request For Comment: The Agency seeks comments on the following issues:

- Whether the information collection requirements are necessary for the proper performance of the Agency's functions, including whether the information is useful;
- The accuracy of the Agency's estimate of the burden (time and costs) of the information collection requirements, including the validity of the methodology and assumptions used;
- The quality, utility, and clarity of the information collected; and
- Ways to minimize the burden on employers who must comply; for example, by using automated or other technological information transmission and collection techniques.

DATES: Submit written comments on or before July 31, 2000.

ADDRESSES: Submit written comments to the Docket Office, Docket No. ICR–1218–0190(2000), Occupational Safety and Health Administration, U.S. Department of Labor, Room N–2625, 200 Constitution Avenue, N.W., Washington, DC 20210; telephone: (202) 693–2350. Commenters may transmit written comments of 10 pages or less in length by facsimile to (202) 693–1648.

FOR FURTHER INFORMATION CONTACT: Theda Kenney, Directorate of Safety Standards Programs, Occupational Safety and Health Administration, U.S. Department of Labor, Room 3–3609, 200 Constitution Avenue, N.W., Washington, DC 20210; telephone: (202) 693–2222. A copy of the Agency's Information Collection Request (ICR) supporting the need for the information collection requirements contained in the standards on Electrical Power Generation, Transmission, and Distribution (29 CFR 1910.269) and Electrical Protective Equipment (29 CFR 1910.137) is available for inspection and copying in the Docket Office, or mailed on request by telephoning Theda Kenney at (202) 693–2222 or Barbara Bielaski at (202) 693–2444. For electronic copies of the ICR, contact OSHA on the Internet at http://www.osha.gov/comp-links.html, and click on ''Information Collection Requests.''

SUPPLEMENTARY INFORMATION:

1. Background

The Department of Labor, as part of its continuing effort to reduce paperwork and respondent burden, conducts a preclearance consultation program to provide the general public and Federal agencies with an opportunity to comment on proposed and continuing informatin collection requirements in accordance with the Paperwork Reduction Act of 1995 (PRA–95) (44 U.S.C. 3506(c)(2)(A)). This program ensures that information is in the desired format, reporting burden (time and costs) is minimal, collection instruments are clearly understood, and OSHA's estimate of the information collection burden is correct.

The Occupational Safety and Health Act of 1970 (the Act) authorizes information collection by employers as necessary or appropriate for enforcement of the Act or for developing information regarding the causes and prevention of occupational injuries, illnesses, and accidents. (29 U.S.C. 657.) In this regard, the information collection requirement contained in 29 CFR 1910.269 will ensure that employers train employees in all aspects of electrical power generation, transmission, and distribution. The information collection requirement in 29 CFR 1910.137 will ensure that equipment used by exposed employees is in reliable working condition.

II. Proposed Actions

OSHA proposes to decrease its earlier estimate of 40,086 burden hours to 11,178 burden hours for the collections of information found in 29 CFR 1910.269 (Electrical Power Generation, Transmission, and Distribution), and 29 CFR 1910.137 (Electrical Protective Equipment). OSHA will summarize the comments submitted in response to this notice, and will include this summary in the request to OMB to extend the approval of the information collection requirements contained in the above standards.

Type of Review: Extension of currently approved information collection requirement.

Agency: Occupational Safety and Health Administration.

Title: Electrical Power Generation, Transmission, and Distribution (29 CFR 1910.269) and Electrical Protective Equipment (29 CFR 1910.137).

OMB Number: 1218–0190.

Affected Public: Business or other for-profit; not-for-profit institutions; Federal government; state, local or tribal government.

Number of Respondents: 362,000.

Frequency: On occasion; annually; semi-annually.

Average Time per Response: 2 minutes (0.03 hour) to 15 minutes (0.25 hour).

Estimated Total Burden Hours: 11,178.

III. Authority and Signature

Charles N. Jeffress, Assistant Secretary of Labor for Occupational Safety and Health, directed the preparation of this notice. The authority for this notice is the Paperwork Reduction Act of 1995 (44 U.S.C. 3506), Secretary of Labor's Order No. 6–96 (62 FR 111).

Signed at Washington, DC, this 26 day of May 2000.

Charles N. Jeffress,

Assistant Secretary of Labor.

[FR Doc. 00–13747 Filed 5–31–00; 8:45 am]

BILLING CODE 4510–26–M

DEPARTMENT OF LABOR

Pension and Welfare Benefits Administration

[Exemption Application No. D–10654]

Withdrawal of Notice of Proposed Exemption Involving Fish Lake Beach, Inc. Profit Sharing Plan (the Plan); Located in Round Lake, Illinois

In the **Federal Register** dated February 29, 2000 (65 FR 10826), the Department of Labor (the Department) published a notice of proposed exemption from the prohibited transaction restrictions of the Employee Retirement Income Security Act of 1974 and from certain taxes imposed by the Internal Revenue Code of 1986. The notice of proposed exemption concerned the prospective cash sale of a certain parcel of real property by the Plan to the trust of Emilie Keil, a party in interest with respect to the Plan.

On April 7, 2000, the applicant informed the Department that it wished to withdraw the notice of proposed exemption.

Accordingly, the notice of proposed exemption is hereby withdrawn.

Signed at Washington, DC, this 25th day of May, 2000.

Ivan L. Strasfeld,

Director of Exemption Determinations, Pension and Welfare Benefits Administration, Department of Labor.

[FR Doc. 00–13642 Filed 5–31–00; 8:45 am]

BILLING CODE 4510–29–P

DEPARTMENT OF LABOR

Pension and Welfare Benefits Administration

[Prohibited Transaction Exemptions 2000–25, et al.; Application Nos. D–10119 and D–10120, et al.]

Morgan Guaranty Trust Company of New York, et al.

AGENCY: Pension and Welfare Benefits Administration, Department of Labor.

ACTION: Grant of Individual Exemptions.[1]

SUMMARY: This document contains individual exemptions issued by the Department of Labor (the Department) from the prohibited transaction restrictions of the Employee Retirement Income Security Act of 1974 (the Act) and from the taxes imposed by the Internal Revenue Code of 1986 (the Code). The exemptions permit purchases of securities by the applicants' asset management affiliate, on behalf of employee benefit plans for which such asset management affiliate is a fiduciary, from underwriting or selling syndicates where the applicants' broker-dealer affiliate participates as a manager or syndicate member. The exemptions affect participants and beneficiaries of the plans investing in such securities.

EFFECTIVE DATE: The exemptions are effective as of February 8, 2000.

FOR FURTHER INFORMATION CONTACT: Ms. Andrea W. Selvaggio or Ms. Karin Weng of the Department, telephone (202) 219–8881. (This is not a toll-free number.)

SUPPLEMENTARY INFORMATION: On February 8, 2000, the Department published a notice of pendency in the **Federal Register** (65 FR 6229) of the proposed exemptions from the restrictions of section 406 of the Act and the sanctions resulting from the application of section 4975 of the Code, by reason of section 4975(c)(1) of the Code. The exemptions were requested in separate applications filed pursuant to section 408(a) of the Act and section 4975(c)(2) of the Code, and in accordance with the procedures set forth in 29 CFR Part 2570, Subpart B (55 FR 32836, August 10, 1990), by the following entities: Morgan Guaranty Trust Company of New York and J.P. Morgan Investment Management Inc. (together, J.P. Morgan) Goldman, Sachs & Co. (Goldman), The Chase Manhattan Bank (Chase), Citigroup Inc. (Citigroup), and Morgan Stanley Dean Witter & Co. (Morgan Stanley).

Effective December 31, 1978, section 102 of Reorganization Plan No. 4 of 1978, 5 U.S.C. App. 1 (1996), generally transferred the authority of the Secretary of the Treasury to issue exemptions of the type requested to the Secretary of Labor. Accordingly, these exemptions are being issued solely by the Department.[2] For convenience, each applicant and its affiliates shall be referred to in the exemption in generic terms that denote certain roles, namely, ''the Applicant,'' ''the Asset Manager,''[3] or ''the Affiliated Broker-Dealer.''[4]

The notice of pendency invited all interested persons to submit written comments or request a public hearing concerning the proposed exemptions by March 24, 2000. The Department received six written comments and no requests for a hearing in response to the notice. Each of the five Applicants

[1] The term ''Individual Exemptions'' refers to the following Prohibited Transaction Exemptions (PTEs): PTE 2000–25 (Application Nos. D–10119 and D–10120, Morgan Guaranty Trust Company of New York and J.P. Morgan Investment Management Inc.); PTE 2000–26 (Application No. D–10587, Goldman, Sachs & Co.); PTE 2000–27 (Application No. D–10779, The Chase Manhattan Bank); PTE 2000–28 (Application No. D–10820, Citigroup Inc); and PTE 2000–29 (Application No. D–10832, Morgan Stanley Dean Witter & Co.).

[2] All references to specific provisions of Title I of the Act herein shall refer also to the corresponding provisions of the Code (if any).

[3] To the extent that the Applicant has more than one asset management affiliate, all references to the Asset Manager herein shall refer also to the other asset management entity or entities.

[4] To the extent that the Applicant has more than one registered broker-dealer affiliate that participates in underwriting or selling syndicates, all references to the Affiliated Broker-Dealer herein shall refer also to the other broker-dealer entity or entities.

submitted a comment. In addition, a law firm, located in Hartford, Connecticut, representing an unidentified financial institution, submitted a comment. Based upon the information contained in the entire record, the Department has determined to grant the proposed exemptions, subject to certain modifications. The comments and modifications are discussed below.

Discussion of the Comments

1. Three of the Applicants, Goldman, Chase, and Citigroup, wished to correct or clarify certain representations made in the Summary of Facts and Representations (the Summary) contained in the notice of proposed exemption (the Notice) (see 65 FR 6229).

a. Goldman stated that the fourth sentence in Item 2 of the Summary (65 FR at 6230) should be revised to read,

> The Investment Management Division of the Applicant (hereinafter, the Asset Manager) includes Goldman Sachs Asset Management and is a separate operating division of the Applicant * * *

b. Chase stated that, as a technical matter, the precise name of its registered investment adviser subsidiary is ''Chase Asset Management, Inc.,'' not ''Chase Asset Management,'' as appears in the second sentence of Item 3 of the Summary (65 FR at 6230).

c. Citigroup stated that the last two sentences in Item 4 of the Summary (65 FR at 6230) should be revised to read,

> It is represented that, as of December 31, 1999, the last day of its most recent fiscal year, all of Citigroup's asset management affiliates had, in the aggregate, client assets under management of approximately $364.4 billion. As of that date, approximately 3.9% of client assets under management were attributable to Client Plans, including those investing in a Pooled Fund.

d. In addition, Citigroup requested that, in clause (e) of the last ''Summary'' paragraph (65 FR at 6234) of the Summary, the phrase ''* * * for the account of a Client Plan'' be added at the end of the clause after ''Asset Manager.''

The Department acknowledges the Applicants' corrections to the Summary and concurs in the clarifying revision to clause (e) on page 6234 of the Summary.

The remainder of the comments requested certain modifications to the proposed operative language in this final exemption.

2. Section I(b)—Issuer Requirements and Exceptions

Three of the Applicants, J.P. Morgan, Goldman, and Morgan Stanley, requested clarification of Section I(b) of the Notice (65 FR at 6237), which requires the issuer of the securities to have been in continuous operation for not less than three years, with certain exceptions. Specifically, Section I(b)(3) provides an exception where the securities are fully guaranteed by a person who has issued securities described in certain other provisions of the exemption ''* * * and this paragraph (b).'' The Applicants stated that this language is circular because it is not clear which part of Section I(b) is being referred to.

The Department concurs in the Applicants' request for clarification, and the language of Section I(b) has been revised in the final exemption so that Section I(b)(3) refers explicitly to a guarantee by a person who ''has been in continuous operation for not less than three years, including the operation of any predecessors,'' as described in the lead-in language of paragraph (b).

3. Section I(c) & (d)—Three Percent Limitations and Pooled Funds

The five Applicants requested the deletion of references to ''Pooled Funds'' in connection with the three percent limitations in Section I(c) and (d) of the Notice. Section I(c) requires that the amount of securities purchased by the Asset Manager on behalf of a particular Client Plan or Pooled Fund may not exceed three percent of the total amount of securities being offered, subject to certain aggregate percentage limitations. Section I(d) requires that the consideration paid by the Client Plan or Pooled Fund for such securities may not exceed three percent of the fair market value of such Client Plan's or Pooled Fund's total net assets.

The Applicants noted that imposing the three percent limitations contained in both Section I(c) and (d) of the Notice on a Pooled Fund as a whole would result in a Client Plan's being treated differently, depending on whether it invests in a Pooled Fund or whether its assets are managed by the Asset Manager directly. They argued that there was no basis for the different treatment, given that Pooled Funds are ''look-through'' vehicles under the Department's ''plan assets'' regulation (29 CFR 2510.3–101). Therefore, the Applicants believe that the three percent limitations should be applied on a plan-by-plan basis.

For example, J.P. Morgan noted that a Pooled Fund is a commingled investment pool with multiple Client Plan investors, which, by its nature, spreads risks among those investors. A single Client Plan's risk would be limited to its proportionate share of any assets of the Pooled Fund. Thus, for a Client Plan with a five percent interest in a Pooled Fund, even if the Pooled Fund were to purchase 10 percent of an offering, such Client Plan's exposure to the offering would be only one-half of one percent. As another example, Chase stated that, if six Client Plans are in a Pooled Fund, the Pooled Fund should be permitted to purchase 18 percent of an offering, subject to the aggregate percentage limitations in Section I(c).

The Applicants stated that the same rationale supports the elimination of the three percent limitation on the consideration paid by a Pooled Fund for such securities in Section I(d) of the Notice. Therefore, in their view, the three percent limitation should apply only to the net assets of each Client Plan in the Pooled Fund.

The Department concurs in the Applicants' request to modify Section I(c) and (d) of the Notice so that both provisions impose a three percent limitation on each Client Plan investing in a Pooled Fund, rather than on the Pooled Fund as a whole. Accordingly, the Department has deleted the references to ''Pooled Funds'' in connection with the three percent limitations in Section I(c) and (d) of the final exemption. However, the Department notes that a Pooled Fund would remain subject to the percentage limitations described in Section I(c) of the exemption on the aggregate amount of securities that may be purchased in an offering by the Asset Manager for all its Client Plans.

4. Section I(a)(1)(ii) & (a)(2), (b), and (c)—

Characterization of Asset-Backed Securities

Among the securities that may be purchased under the exemption are pass-through certificates representing interests in asset pools. Such certificates are often referred to as ''mortgage-backed'' securities or ''asset-backed'' securities and may have characteristics of both equity and debt. The five Applicants requested clarification that asset-backed securities will be treated as ''debt'' for purposes of the exemption.

For example, Section I(c) of the Notice imposes certain aggregate percentage limitations on the amount of securities that may be purchased in an offering by the Asset Manager for all its managed Client Plans. These percentage limitations differ, depending on whether the securities involved are equity securities, debt securities rated in one of the four highest rating categories, or debt securities rated in the fifth or sixth highest rating categories.

The Applicants noted that asset-backed securities, which entitle the holder to pass-through payments of principal and interest relating to assets

held in the underlying pool, are normally rated by nationally recognized statistical rating organizations and are regarded in the market as debt securities. The Applicants argued, therefore, that asset-backed securities should be categorized as debt for purposes of the exemption.

Other relevant provisions, in addition to Section I(c), are as follows: Section I(a)(1)(ii), which requires that, in the case of equity securities in an Eligible Rule 144A Offering, the offering syndicate must obtain a legal opinion regarding the adequacy of the disclosure in the offering memorandum; Section I(a)(2), which provides an exception for debt securities from the general requirement that the securities are purchased prior to the end of the first day on which any sales are made, at a price that is not more than the price paid by each other purchaser of securities in that offering; and Section I(b), which provides an exception for certain debt securities from the general requirement that the issuer of the securities must have been in continuous operation for not less than three years.

The Department concurs in the Applicants' suggestion that, solely for purposes of the exemption, appropriately rated mortgage-backed or other asset-backed securities should be treated as debt securities. Accordingly, this clarification has been added to the definition of ''security'' in Section II of the final exemption.

The Department is persuaded to take this position within the limited context of this exemption in recognition of the fact that most purchasers view asset-backed securities as debt securities. However, the Department is providing no opinion herein as to whether asset-backed securities should be considered either equity or debt securities for any other purposes outside the scope of this exemption.[5]

5. Section I(i)(1) and (k)(1)—Notice of Proposed Exemption

Two of the Applicants, Goldman and Morgan Stanley, requested the deletion of the requirement in Section I(i)(1) and (k)(1) of the Notice (65 FR at 6238) that a copy of such Notice, as published in the **Federal Register** on February 8, 2000, in addition to a copy of the final exemption, be provided to the Independent Fiduciaries of the Client Plans. They argued that providing both documents is unnecessary and that most of the Client Plans will already have received a copy of the Notice in connection with the Department's procedural requirements regarding notice to interested persons.

In response to the comments, the Department notes that new Client Plans will not have received a copy of the Notice. The Department believes that the proposed exemption provides useful information about the underwriting business that may be helpful to the Independent Fiduciaries monitoring covered transactions. Accordingly, the Department has retained the disclosure requirements pertaining to the Notice in the final exemption.

6. Section I(n)(1)—Quarterly Report Information

The five Applicants requested the deletion in Section I(n)(1) of the Notice (65 FR 6239) of various items of information about the purchased securities required to be provided on a quarterly basis to the Independent Fiduciaries. According to the Applicants, this information is unnecessary and should be disclosed to the Independent Fiduciaries only upon request, as required in Section I(n)(3) of the Notice (65 FR at 6239).

The items in Section I(n)(1) of the Notice that the Applicants do not wish to specifically disclose in the quarterly reports to the Client Plans are as follows.

a. The first day on which any sale was made during the offering (iii).

b. The size of the issue (iv).

c. The identity of the underwriter from whom the securities were purchased (vi)—this deletion was requested only by J.P. Morgan and Citigroup.

d. The spread on the underwriting (vii)—this deletion was requested only by J.P. Morgan and Citigroup.

e. In addition, Citigroup requested that item (ix) be revised to read, '' * * * the price at which any *such* securities purchased during the period were sold'' [added word underlined], in order to clarify that the securities referred to are those purchased for a Client Plan under the exemption.

In this regard, the Department concurs in the revision to item (ix) of Section I(n)(1) of the Notice, as requested by Citigroup. However, the Department believes that the information required to be reported in items (iii), (iv), (vi), and (vii) of Section I(n)(1) of the Notice are relevant for purposes of monitoring covered transactions by the Independent Fiduciaries. As explained in the proposed exemption, the items listed in Section I(n)(1) are virtually identical to the information already required by Securities and Exchange Commission (SEC) Rule 10f–3 under the Investment Company Act of 1940 (the 1940 Act), which the Applicants encouraged the Department to use as a model for this exemption. Under Rule 10f–3, the independent directors of mutual funds are charged with reviewing transactions where a mutual fund buys securities from a syndicate in which the fund's affiliate is a ''principal underwriter,'' as defined in Section 2(a)(29) of the 1940 Act.[6]

The Department continues to believe that the quarterly report, which summarizes all the key elements of the subject transactions, will provide the Independent Fiduciaries with a convenient way to regularly monitor compliance with the exemption. Accordingly, the Department has retained the requirement in the final exemption to report the information listed in items (iii), (iv), (vi), and (vii) on a quarterly basis to the Independent Fiduciaries.

7. Section I(n)(2)—Quarterly Affiliated Broker-Dealer Certification

Four of the Applicants, J.P. Morgan, Goldman, Chase, and Morgan Stanley, commented on Section I(n)(2) of the Notice (65 FR at 6239), which requires that the written certification from the Affiliated Broker-Dealer mandated by Section I(g)(2) of the Notice be made part of the quarterly reports to the Independent Fiduciaries.

[5] The Department notes that under Title I of the Act, and the ''plan assets'' regulation, ''a beneficial interest in a trust [is] an equity interest,'' 29 CFR 2510.3–101(b)(1). As noted in the proposed exemption, footnote 13 (FR 65 at 6234), certain purchases of asset-backed securities may result in other prohibited transactions requiring additional exemptive relief because these securities are not publicly offered and the ''significant participation'' exception to the ''look-through rule'' of the ''plan assets'' regulation (29 CFR 2510.3–101(b)(3)) would not apply. A list of individual exemptions then existing for asset-backed securities may be found in PTE 97–34 (62 FR 39021, July 21, 1997), which granted an amendment to these exemptions.

[6] The Department understands that the Applicants, or their affiliates, are covered by Rule 10f–3 and, hence, are familiar with quarterly reporting of certain underwriting transactions. As a point of clarification, the Department notes that under the SEC's definition of ''principal underwriter,'' underwriters, whether managers or members, have the same reporting requirements pursuant to Rule 10f–3. PTE 75–1, Part III, on the other hand, distinguishes between managers and members, defining a manager as an underwriter ''* * * authorized to act on behalf of all members * * * or who receives compensation from the members of the syndicate for its services as a manager * * *'' In situations where an Applicant is a member, not a manager, the Applicant may continue to rely on PTE 75–1, Part III, to purchase securities covered by that exemption. These individual exemptions also permit the purchase of Eligible Rule 144A Securities. Where an Applicant wishes to obtain the additional relief granted in these exemptions, the same conditions apply to both managers and members. To further clarify, the Department has added the definition of ''manager,'' as defined in PTE 75–1, Part III, to the definition of ''Affiliated Broker-Dealer'' in Section II of the final exemption.

a. Chase requested that Section I(n)(2) of the Notice be modified so that the time frame for providing the certification would be no later than the report covering the second calendar quarter after the quarter in which an underwriting occurred. In addition, Chase requested clarification regarding any difference in meaning behind the different terminology used to denote time periods in Section I(n)(4) and (n)(2) of the Notice—''next quarterly report'' and ''preceding quarter'' versus ''past quarter.''

b. J.P. Morgan, Goldman, and Morgan Stanley argued that it is unnecessary to provide the actual certification, which will likely look the same from quarter to quarter and which will be maintained pursuant to the exemption's recordkeeping conditions. Therefore, the Applicants requested that the Asset Manager be required instead to merely state in its quarterly reports that it has received such certification from the Affiliated Broker-Dealer, and that a copy of such certification will be provided to the Independent Fiduciaries upon request.

With respect to the modification to Section I(n)(2) of the Notice requested by Chase regarding an extension of time for providing the certification to the Independent Fiduciaries, the Department believes that 45 days following the period in which an underwriting occurred is a sufficient time to provide the certification. In addition, the Department wishes to clarify that no difference in meaning was intended by the different terminology used to denote time periods in Section I(n)(4) and (n)(2) of the Notice. Therefore, the language of Section I(n)(4) has been revised in the final exemption to eliminate any appearance of inconsistency. Specifically, the phrase ''next quarterly report'' has been changed to ''quarterly report,'' and the phrase ''preceding quarter'' to ''past quarter.''

With respect to the modification to Section I(n)(2) of the Notice requested by J.P. Morgan, Goldman, and Morgan Stanley, the Department concurs in the Applicants' suggestion that a representation regarding the certification in the quarterly reports may be made in lieu of providing the actual certification to the Independent Fiduciaries. The representation in the quarterly reports must state that the certification relates to each covered transaction during the past quarter. Accordingly, the Department has modified Section I(n)(2) in the final exemption.

8. Section I(n)(4)—Quarterly Reporting on Trading Restrictions

The five Applicants raised concerns that the language in Section I(n)(4) of the Notice (65 FR at 6239), which requires the disclosure in the quarterly reports of restrictions on trading in the covered securities, may be broader than necessary.

The Department notes that, according to the Applicants, their business separation policies are designed, among other things, to limit the flow of information that could restrict the Asset Manager's flexibility in managing client assets (65 FR at 6232). In deciding to propose the exemptions, the Department was reassured by those representations. Should this flexibility be limited, for example, by a restriction that precluded the Asset Manager's sale of the securities purchased in the underwriting, the Department believes that any such restriction should be disclosed to the Independent Fiduciaries. After consideration of the issue, the Department has determined to narrow the language in Section I(n)(4) in the final exemption by substituting the term ''selling'' in place of the term ''trading in.'' In addition, the Department has revised the condition so that it refers explicitly to covered securities purchased during the past quarter.

9. Section I(i)(3), (j) & (k)(3), (l) and (m)—Termination Form

Four of the Applicants, J.P. Morgan, Goldman, Morgan Stanley, and Citigroup, requested deletion of the requirement that a ''termination form'' be provided annually that enables the Independent Fiduciaries to terminate authorization, without penalty, for the Asset Manager to engage in transactions pursuant to the exemption. In addition, Chase commented that the reference in Section I(j) of the Notice to Section I(i)(3) is duplicative and should be deleted.

Section I(i)(3) of the Notice (65 FR at 6238) requires that the termination form be provided as part of the initial disclosure to the Independent Fiduciaries of single Client Plans, while Section I(j) of the Notice (65 FR at 6238) requires that such a termination form also be provided at least annually. Section I(k)(3), (l), and (m) of the Notice (65 FR at 6238, 6239) contain parallel requirements for the Independent Fiduciaries of Client Plans investing in a Pooled Fund. The Applicants argued that termination forms are unnecessary, given the type of sophisticated plans that would be covered by the exemption and the quarterly disclosures that would also be required. They stated that a more practical and efficient alternative would be the addition to the quarterly reports of a reminder that a Client Plan's prior consent to the covered transactions may be withdrawn at any time.

For a single Client Plan, it was suggested that such notification explicitly state that the authorization to engage in the covered transactions, as described in the quarterly report, may be terminated without penalty by the Independent Fiduciary on no more than five days' notice and would identify a contact person. For Client Plans investing a Pooled Fund that engages in the covered transactions, the notification would explicitly state that the Independent Fiduciary may terminate investment in the Pooled Fund without penalty and would identify a contact person.

The Department concurs in the Applicants' request to eliminate initial termination forms for single Client Plans and annual termination forms for both single Client Plans and Client Plans investing in a Pooled Fund. However, the Department believes that it is important for Client Plans in a Pooled Fund to receive a termination form as part of the initial disclosure materials, since withdrawing from the Pooled Fund is the only option available to a Client Plan not wishing to authorize use of the exemption. In lieu of annual termination forms, notification to the Independent Fiduciaries regarding their right to terminate authorization may be made in the quarterly reports, provided that such notification is prominently displayed. These modifications are reflected in Section I(i)(3), (j) & (k)(3), (l) and (m) of the final exemption. In this regard, the Department notes that the cross-reference in the original Section I(m) of the Notice to Section I(k)(3) was a typographical error that should have been a cross-reference to Section I(k)(2). To clarify, the Department has deleted such cross-references in parallel conditions Section I(j) and (m) of the final exemption and written out the relevant language concerning the requirement for making ongoing disclosures to the Independent Fiduciaries. The Department believes that these revisions are also responsive to Chase's comment regarding Section I(j) of the Notice.

10. Section I(o)—$50 Million Plan Size Requirement

A comment concerning Section I(o) of the Notice was submitted by an unidentified financial institution which supports the grant of this final exemption by the Department. Although not one of the original Applicants, the

unidentified financial institution raised a concern that may be shared by other similarly situated financial institutions interested in the subject transactions.

The commentator noted that Section I(o) of the Notice limited exemptive relief to Client Plans with total net assets of $50 million or more, or to Pooled Funds where at least 50 percent of the units of beneficial interest in such Pooled Fund are held by Client Plans having total net assets of at least $50 million. The Department stated, in paragraph 13 of the Discussion of the Proposed Exemption in the Notice (65 FR at 6236), that the minimum plan size requirements will help insure that Client Plans have the resources and investment sophistication needed to monitor the Asset Manager's investment performance with respect to the covered transactions. However, the commentator argued that some smaller companies with qualified plans having total assets in the range of $10 million to $50 million are very sophisticated. The commentator stated that lowering the minimum plan size requirement would afford smaller companies and newer plans access to desirable investment opportunities.

After consideration of the issue, the Department has determined that the present minimum plan size requirements are necessary to insure an appropriate level of plan investor sophistication for the covered transactions. Of course, upon proper application, the Department would be prepared to consider additional relief for transactions that do not meet all the conditions of this exemption, provided that the findings under section 408(a) of the Act may be made.

11. Section I(o)—Single Master Trust Requirement

Three of the Applicants, J.P. Morgan, Goldman, and Morgan Stanley, requested a modification to Section I(o) of the Notice. The second paragraph of Section I(o) provides that the assets of a group of Client Plans maintained by a single employer, or controlled group of employers, may be aggregated for purposes of meeting the minimum size requirements therein, but only if the assets are pooled for investment purposes in a single master trust. Under the modification requested by the Applicants, aggregation of plan assets would be permitted even when such assets are not in a single master trust, if managed by a single Independent Fiduciary.

As noted in Item 10, above, the minimum size requirements for Client Plans and Pooled Funds in Section I(o) are designed to insure a certain level of investment sophistication on the part of the Independent Fiduciaries who will be responsible for approving and monitoring the covered transactions. However, the Applicants argued that, if the assets of related plans are not pooled in a single master trust, that fact is not necessarily indicative of a lack of sophistication on the part of a single fiduciary who may be managing such assets.

After consideration of the issue, the Department is not persuaded by the arguments submitted in favor of modifying the exception to the minimum plan size requirements. Accordingly, the Department has retained the condition that aggregation of certain plan assets for purposes of meeting the minimum size requirements in Section I(o) of the final exemption is permitted only if the assets are held in a single master trust.

12. Section I(q)—10 Percent Limitation on In-house Plan Investment in Pooled Funds

Four of the Applicants, J.P. Morgan, Goldman, Chase, and Morgan Stanley, requested deletion of the requirement in Section I(q) of the Notice that no more than 10 percent of the assets of a Pooled Fund may be comprised of assets of employee benefit plans maintained by the Asset Manager, Affiliated Broker-Dealer, or an affiliate thereof, for their own employees (an In-house Plan), for which the Asset Manager, Affiliated Broker-Dealer, or an affiliate exercises investment discretion. This condition would be measured at the time of a covered transaction.

The Applicants stated that this 10 percent limitation has no direct bearing on the covered transactions themselves, insofar as permissible fees or the disclosure and approval process for Client Plans. Further, In-house Plans are limited in their ability to invest in Pooled Funds, even in situations where an additional investment may be in the interests of the In-house Plans. As an alternative to eliminating any percentage limitation altogether, J.P. Morgan suggested that a 25 percent limitation be substituted for the 10 percent limitation in Section I(q) of the Notice.

With respect to the Applicants' request to eliminate the 10 percent limitation in Section I(q) of the Notice, the Department is not persuaded by the arguments submitted in favor of deletion of this percentage requirement. The Department believes that elimination of this condition could result in a failure to insure a sufficient level of independent client oversight over transactions involving a Pooled Fund.

However, the Department believes that a 20 percent limitation would still insure a sufficient level of independent investor oversight of the Asset Manager and would not unduly restrict the investment opportunities available for In-house Plans. Accordingly, the Department has substituted a 20 percent limitation on In-house Plan investment in Pooled Funds in Section I(q) of the final exemption.

13. Section II(g)—Definition of Independent Fiduciary

The five Applicants commented that Section II(g) of the Notice defining the term ''Independent Fiduciary'' for purposes of the subject transactions is too narrow. Specifically, Section II(g)(2) deems a fiduciary not to be ''independent'' of the Asset Manager if such fiduciary, or any officer, director, partner, employee, or relative of the fiduciary, is an officer, director, partner, or employee of the Asset Manager (or is a relative of such persons). The Applicants noted that it is too administratively burdensome to be required to track all such relationships to specific individuals who may be employed by such large organizations, especially when most of these persons would have no power to influence any decisions of the fiduciary on matters relating to the exemption.

As a solution to this problem, Chase favored the deletion of a separate definition of ''Independent Fiduciary'' and noted that users of certain class exemptions, such as PTE 94–20 (59 FR 8022, February 17, 1994) [7] and PTE 98–54 (63 FR 63503, November 13, 1998), [8] determine themselves whether a fiduciary is independent. Chase, along with Goldman and Morgan Stanley, suggested the adoption of the functional test for an Independent Fiduciary, as used in PTE 86–128 (51 FR 41686, November 18, 1986). [9] In Section I(f) of PTE 86–128, a plan fiduciary is deemed to be independent of a person in the absence of a relationship or interest in such person that might affect the

[7] PTE 94–20 provides a class exemption, under certain conditions, for the purchase and sale of foreign currencies between an employee benefit plan and a bank or a broker-dealer or an affiliate thereof, which is a party in interest with respect to such plan.

[8] PTE 98–54 provides a class exemption, under certain conditions, for foreign exchange transactions executed pursuant to standing instructions.

[9] PTE 86–128 provides a class exemption, under certain conditions, permitting persons who serve as fiduciaries for employee benefit plans to effect or execute securities transactions on behalf of such plans.

exercise of such fiduciary's best judgment in connection with the subject transactions.

As a third possibility, J.P. Morgan, Goldman, Morgan Stanley, and Citigroup requested an expansion of the ''carve-out'' provision, in Section II(g) of the Notice, for the Asset Manager's personnel who serve as directors of other organizations. Under the expanded ''carve-out'' provision, another organization may still be deemed ''independent'' of the Asset Manager, if such organization's officer, partner, or employee, as well as director, (or a relative of such persons), who is affiliated with the Asset Manager, abstains from participation in certain decisions relating to the retention of the Asset Manager and the required authorizations under the exemption. In this regard, J.P. Morgan suggested specific language to be added to the end of Section II(g) of the Notice.

The Department concurs in the Applicants' request for a revision to the definition of ''Independent Fiduciary'' in Section II(g) of the Notice. After discussion with all of the Applicants, the Department is persuaded that such definition can be revised in a manner calculated to minimize administrative burdens in connection with the exemption, while restricting those persons whose independent judgment might be compromised from acting as a fiduciary for a Client Plan because of certain relationships to the Asset Manager. Accordingly, the Department has modified the definition of ''Independent Fiduciary'' in Section II(g) of the final exemption to read as follows:

(g)(1) The term ''Independent Fiduciary'' means a fiduciary of a Client Plan who is unrelated to, and independent of, the Asset Manager and the Affiliated Broker-Dealer. For purposes of this exemption, a Client Plan fiduciary will be deemed to be unrelated to, and independent of, the Asset Manager and the Affiliated Broker-Dealer if such fiduciary represents that neither such fiduciary, nor any individual responsible for the decision to authorize or terminate authorization for transactions described in Section I, is an officer, director, or highly compensated employee (within the meaning of section 4975(e)(2)(H) of the Code) of the Asset Manager or the Affiliated Broker-Dealer and represents that such fiduciary shall advise the Asset Manager if those facts change.

(2) Notwithstanding anything to the contrary in this Section II(g), a fiduciary is not independent if:

(i) such fiduciary directly or indirectly controls, is controlled by, or is under common control with the Asset Manager or the Affiliated Broker-Dealer;

(ii) such fiduciary directly or indirectly receives any compensation or other consideration from the Asset Manager or the Affiliated Broker-Dealer for his or her own personal account in connection with any transaction described in this exemption;

(iii) any officer, director, or highly compensated employee (within the meaning of section 4975(e)(2)(H) of the Code) of the Asset Manager, responsible for the transactions described in Section I, is an officer, director, or highly compensated employee (within the meaning of section 4975(e)(2)(H) of the Code) of the Client Plan sponsor or of the fiduciary responsible for the decision to authorize or terminate authorization for transactions described in Section I. However, if such individual is a director of the Client Plan sponsor or of the responsible fiduciary, and if he or she abstains from participation in (A) the choice of the Plan's investment manager/adviser and (B) the decision to authorize or terminate authorization for transactions described in Section I, then Section II (g)(2)(iii) shall not apply.

(3) The term ''officer'' means a president, any vice president in charge of a principal business unit, division or function (such as sales, administration or finance), or any other officer who performs a policy-making function for the entity.

(4) In the case of existing Client Plans in a Pooled Fund, at the time the Asset Manager provides such Client Plans with initial notice pursuant to this exemption, the Asset Manager will notify the fiduciaries of such Client Plans that they must advise the Asset Manager, in writing, if they are not independent, within the meaning of this Section II (g).

General Information

The attention of interested persons is directed to the following:

(1) The fact that a transaction is the subject of an exemption under section 408(a) of the Act and section 4975(c)(2) of the Code does not relieve a fiduciary or other party in interest or disqualified person from certain other provisions of the Act and the Code, including any prohibited transaction provisions to which the exemption does not apply and the general fiduciary responsibility provisions of section 404 of the Act, which require, among other things, that a fiduciary discharge his or her duties respecting a plan solely in the interest of the participants and beneficiaries of such plan and in a prudent manner in accordance with section 404(a)(1)(B) of the Act; nor does it affect the requirements of section 401(a) of the Code that the plan operate for the exclusive benefit of the employees of the employer maintaining the plan and their beneficiaries;

(2) In accordance with section 408(a) of the Act and section 4975(c)(2) of the Code, the Department finds that the exemptions are administratively feasible, in the interests of the affected plans and their participants and beneficiaries, and protective of the rights of those participants and beneficiaries; and

(3) The exemptions are supplemental to, and not in derogation of, any other provisions of the Act and the Code, including statutory or administrative exemptions. Furthermore, the fact that a transaction is subject to an administrative or statutory exemption is not dispositive of whether the transaction is, in fact, a prohibited transaction.

(4) The exemptions are subject to the express condition that the material facts and representations contained in the applications accurately describe all material terms of the transactions that are the subject of the exemptions.

Exemption

Under the authority of section 408(a) of the Employee Retirement Income Security Act (the Act) and section 4975(c)(2) of the Internal Revenue Code of 1986 (the Code) and in accordance with the procedures set forth in 29 CFR Part 2570, Subpart B (55 FR 32836, August 10, 1990), the Department grants the following individual Prohibited Transaction Exemptions (PTEs): PTE 2000–, Morgan Guaranty Trust Company of New York and J.P. Morgan Investment Management Inc.; PTE 2000–, Goldman, Sachs & Co.; PTE 2000–, The Chase Manhattan Bank; PTE 2000–, Citigroup Inc; and PTE 2000–, Morgan Stanley Dean Witter & Co.

Section I—Transactions

Effective February 8, 2000, the restrictions of section 406 of the Act and the sanctions resulting from the application of section 4975 of the Code, by reason of section 4975(c)(1) of the Code, shall not apply to the purchase of any securities by the Asset Manager on behalf of employee benefit plans (Client Plans), including Client Plans investing in a pooled fund (Pooled Fund), for which the Asset Manager acts as a fiduciary, from any person other than the Asset Manager or an affiliate thereof, during the existence of an underwriting or selling syndicate with respect to such securities, where the Affiliated Broker-Dealer is a manager or member of such syndicate, provided that the following conditions are satisfied:

(a) The securities to be purchased are—

(1) either:

(i) part of an issue registered under the Securities Act of 1933 (the 1933 Act) (15 U.S.C. 77a *et seq.*) or, if exempt from such registration requirement, are (A) issued or guaranteed by the United States or by any person controlled or supervised by and acting as an instrumentality of the United States

pursuant to authority granted by the Congress of the United States, (B) issued by a bank, (C) exempt from such registration requirement pursuant to a federal statute other than the 1933 Act, or (D) are the subject of a distribution and are of a class which is required to be registered under section 12 of the Securities Exchange Act of 1934 (the 1934 Act) (15 U.S.C. 781), and the issuer of which has been subject to the reporting requirements of section 13 of that Act (15 U.S.C. 78m) for a period of at least 90 days immediately preceding the sale of securities and has filed all reports required to be filed thereunder with the Securities and Exchange Commission (SEC) during the preceding 12 months; or

(ii) part of an issue that is an ''Eligible Rule 144A Offering,'' as defined in SEC Rule 10f-3 (17 CFR 270.10f-3(a)(4)). Where the Eligible Rule 144A Offering is of equity securities, the offering syndicate shall obtain a legal opinion regarding the adequacy of the disclosure in the offering memorandum;

(2) purchased prior to the end of the first day on which any sales are made, at a price that is not more than the price paid by each other purchaser of securities in that offering or in any concurrent offering of the securities, except that—

(i) if such securities are offered for subscription upon exercise of rights, they may be purchased on or before the fourth day preceding the day on which the rights offering terminates; or

(ii) if such securities are debt securities, they may be purchased at a price that is not more than the price paid by each other purchaser of securities in that offering or in any concurrent offering of the securities and may be purchased on a day subsequent to the end of the first day on which any sales are made, provided that the interest rates on comparable debt securities offered to the public subsequent to the first day and prior to the purchase are less than the interest rate of the debt securities being purchased; and

(3) offered pursuant to an underwriting or selling agreement under which the members of the syndicate are committed to purchase all of the securities being offered, except if—

(i) such securities are purchased by others pursuant to a rights offering; or

(ii) such securities are offered pursuant to an over-allotment option.

(b) The issuer of such securities has been in continuous operation for not less than three years, including the operation of any predecessors, unless—

(1) such securities are non-convertible debt securities rated in one of the four highest rating categories by at least one nationally recognized statistical rating organization, *i.e.,* Standard & Poor's Rating Services, Moody's Investors Service, Inc., Duff & Phelps Credit Rating Co., or Fitch IBCA, Inc., or their successors (collectively, the Rating Organizations); or

(2) such securities are issued or fully guaranteed by a person described in paragraph (a)(1)(i)(A) of this exemption; or

(3) such securities are fully guaranteed by a person who has issued securities described in (a)(1)(i)(B), (C), or (D), and who has been in continuous operation for not less than three years, including the operation of any predecessors.

(c) The amount of such securities to be purchased by the Asset Manager on behalf of a Client Plan does not exceed three percent of the total amount of the securities being offered. Notwithstanding the foregoing, the aggregate amount of any securities purchased with assets of all Client Plans (including Pooled Funds) managed by the Asset Manager (or with respect to which the Asset Manager renders investment advice within the meaning of 29 CFR 2510.3–21(c)) does not exceed:

(1) 10 percent of the total amount of any equity securities being offered;

(2) 35 percent of the total amount of any debt securities being offered that are rated in one of the four highest rating categories by at least one of the Rating Organizations; or

(3) 25 percent of the total amount of any debt securities being offered that are rated in the fifth or sixth highest rating categories by at least one of the Rating Organizations; and

(4) if purchased in an Eligible Rule 144A Offering, the total amount of the securities being offered for purposes of determining the percentages for (1)–(3) above is the total of:

(i) the principal amount of the offering of such class sold by underwriters or members of the selling syndicate to ''qualified institutional buyers'' (QIBs), as defined in SEC Rule 144A (17 CFR 230.144A(a)(1)); plus

(ii) the principal amount of the offering of such class in any concurrent public offering.

(d) The consideration to be paid by the Client Plan in purchasing such securities does not exceed three percent of the fair market value of the total net assets of the Client Plan, as of the last day of the most recent fiscal quarter of the Client Plan prior to such transaction.

(e) The transaction is not part of an agreement, arrangement, or understanding designed to benefit the Asset Manager or an affiliate.

(f) The Affiliated Broker-Dealer does not receive, either directly, indirectly, or through designation, any selling concession or other consideration that is based upon the amount of securities purchased by Client Plans pursuant to this exemption. In this regard, the Affiliated Broker-Dealer may not receive, either directly or indirectly, any compensation that is attributable to the fixed designations generated by purchases of securities by the Asset Manager on behalf of its Client Plans.

(g)(1) The amount the Affiliated Broker-Dealer receives in management, underwriting or other compensation is not increased through an agreement, arrangement, or understanding for the purpose of compensating the Affiliated Broker-Dealer for foregoing any selling concessions for those securities sold pursuant to this exemption. Except as described above, nothing in this paragraph shall be construed as precluding the Affiliated Broker-Dealer from receiving management fees for serving as manager of the underwriting or selling syndicate, underwriting fees for assuming the responsibilities of an underwriter in the underwriting or selling syndicate, or other consideration that is not based upon the amount of securities purchased by the Asset Manager on behalf of Client Plans pursuant to this exemption; and

(2) The Affiliated Broker-Dealer shall provide to the Asset Manager a written certification, signed by an officer of the Affiliated Broker-Dealer, stating the amount that the Affiliated Broker-Dealer received in compensation during the past quarter, in connection with any offerings covered by this exemption, was not adjusted in a manner inconsistent with Section I, paragraphs (e), (f), or (g), of this exemption.

(h) In the case of a single Client Plan, the covered transaction is performed under a written authorization executed in advance by an independent fiduciary (Independent Fiduciary) of the Client Plan.

(i) Prior to the execution of the written authorization described in paragraph (h) above, the following information and materials must be provided by the Asset Manager to the Independent Fiduciary of each single Client Plan:

(1) a copy of the notice of proposed exemption and of the final exemption, as published in the **Federal Register**; and

(2) any other reasonably available information regarding the covered transactions that the Independent Fiduciary requests.

(j) Subsequent to an Independent Fiduciary's initial authorization permitting the Asset Manager to engage in the covered transactions on behalf of a single Client Plan, the Asset Manager will continue to be subject to the requirement to provide any reasonably available information regarding the covered transactions that the Independent Fiduciary requests.

(k) In the case of existing plan investors in a Pooled Fund, such Pooled Fund may not engage in any covered transactions pursuant to this exemption, unless the Asset Manager has provided the written information described below to the Independent Fiduciary of each plan participating in the Pooled Fund. The following information and materials shall be provided not less than 45 days prior to the Asset Manager's engaging in the covered transactions on behalf of the Pooled Fund pursuant to the exemption:

(1) A notice of the Pooled Fund's intent to purchase securities pursuant to this exemption and a copy of the notice of proposed exemption and of the final exemption, as published in the **Federal Register**;

(2) Any other reasonably available information regarding the covered transactions that the Independent Fiduciary requests; and

(3) A termination form expressly providing an election for the Independent Fiduciary to terminate the plan's investment in the Pooled Fund without penalty to the plan. Such form shall include instructions specifying how to use the form. Specifically, the instructions will explain that the plan has an opportunity to withdraw its assets from the Pooled Fund for a period at least 30 days after the plan's receipt of the initial notice described in subparagraph (1) above and that the failure of the Independent Fiduciary to return the termination form by the specified date shall be deemed to be an approval by the plan of its participation in covered transactions as a Pooled Fund investor. Further, the instructions will identify the Asset Manager and its Affiliated Broker-Dealer and state that this exemption may be unavailable unless the Independent Fiduciary is, in fact, independent of those persons. Such fiduciary must advise the Asset Manager, in writing, if it is not an ''independent Fiduciary,'' as that term is defined in Section II(g) of this exemption.

For purposes of this paragraph, the requirement that the authorizing fiduciary be independent of the Asset Manager shall not apply in the case of an in-house plan sponsored by the Applicant or an affiliate thereof. However, in-house plans must notify the Asset Manager, as provided above.

(l) In the case of a plan whose assets are proposed to be invested in a Pooled Fund subsequent to implementation of the procedures to engage in the covered transactions, the plan's investment in the Pooled Fund is subject to the prior written authorization of an Independent Fiduciary, following the receipt by the Independent Fiduciary of the materials described in subparagraphs (1) and (2) of paragraph (k). For purposes of this paragraph, the requirement that the authorizing fiduciary be independent of the Asset Manager shall not apply in the case of an in-house plan sponsored by the Applicant or an affiliate thereof.

(m) Subsequent to an Independent Fiduciary's initial authorization of a plan's investment in a Pooled Fund that engages in the covered transactions, the Asset Manager will continue to be subject to the requirement to provide any reasonably available information regarding the covered transactions that the Independent Fiduciary requests.

(n) At least once every three months, and not later than 45 days following the period to which such information relates, the Asset Manager shall:

(1) furnish the Independent Fiduciary of each single Client Plan, and of each plan investing in a Pooled Fund, with a report (which may be provided electronically) disclosing all securities purchased on behalf of that Client Plan or Pooled Fund pursuant to the exemption during the period to which such report relates, and the terms of the transactions, including:

(i) the type of security (including the rating of any debt security);

(ii) the price at which the securities were purchased;

(iii) the first day on which any sale was made during this offering;

(iv) the size of the issue;

(v) the number of securities purchased by the Asset Manager for the specific Client Plan or Pooled Fund;

(vi) the identity of the underwriter from whom the securities were purchased;

(vii) the spread on the underwriting;

(ix) the price at which any such securities purchased during the period were sold; and

(x) the market value at the end of such period of each security purchased during the period and not sold;

(2) provide to the Independent Fiduciary in the quarterly report a representation that the Asset Manager has received a written certification signed by an officer of the Affiliated Broker-Dealer, as described in paragraph (g)(2), affirming that, as to each offering covered by this exemption during the past quarter, the Affiliated Broker-Dealer acted in compliance with Section I, paragraphs (e), (f), and (g) of this exemption, and that a copy of such certification will be provided to the Independent Fiduciary upon request;

(3) disclose to the Independent Fiduciary that, upon request, any other reasonably available information regarding the covered transactions that the Independent Fiduciary requests will be provided, including, but not limited to:

(i) the date on which the securities were purchased on behalf of the plan;

(ii) the percentage of the offering purchased on behalf of all Client Plans and Pooled Funds; and

(iii) the identity of all members of the underwriting syndicate;

(4) disclose to the Independent Fiduciary in the quarterly report, any instance during the past quarter where the Asset Manager was precluded for any period of time from selling a security purchased under this exemption in that quarter because of its status as an affiliate of the Affiliated Broker-Dealer and the reason for this restriction;

(5) provide explicit notification, prominently displayed in each quarterly report, to the Independent Fiduciary of a single Client Plan, that the authorization to engage in the covered transactions may be terminated, without penalty, by the Independent Fiduciary on no more than five days' notice by contacting an identified person; and

(6) provide explicit notification, prominently displayed in each quarterly report, to the Independent Fiduciary of a Client Plan investing a Pooled Fund, that the Independent Fiduciary may terminate investment in the Pooled Fund, without penalty, by contacting an identified person.

(o) Each single Client Plan shall have total net assets with a value of at least $50 million. In addition, in the case of a transaction involving an Eligible Rule 144A Offering on behalf of a single Client Plan, each such Client Plan shall have at least $100 million in securities, as determined pursuant to SEC Rule 144A (17 CFR 230.144A). In the case of a Pooled Fund, the $50 million requirement will be met if 50 percent or more of the units of beneficial interest in such Pooled Fund are held by plans having total net assets with a value of at least $50 million. For purchases involving an Eligible Rule 144A Offering on behalf of a Pooled Fund, the $100 million requirement will be met if 50 percent or more of the units of beneficial interest in such Pooled Fund are held by plans having at least $100 million in assets and the Pooled Fund

itself qualifies as a QIB, as determined pursuant to SEC Rule 144A (17 CFR 230.144A(a)(F)).

For purposes of the net asset tests described above, where a group of Client Plans is maintained by a single employer or controlled group of employers, as defined in section 407(d)(7) of the Act, the $50 million net asset requirement or the $100 million net asset requirement may be met by aggregating the assets of such Client Plans, if the assets are pooled for investment purposes in a single master trust.

(p) The Asset Manager qualifies as a ''qualified professional asset manager'' (QPAM), as that term is defined under Part V(a) of Prohibited Transaction Exemption 84–14 (49 FR 9494, 9506, March 13, 1984) and, in addition, has, as of the last day of its most recent fiscal year, total client assets under its management and control in excess of $5 billion and shareholders' or partners' equity in excess of $1 million.

(q) No more than 20 percent of the assets of a Pooled Fund, at the time of a covered transaction, are comprised of assets of employee benefit plans maintained by the Asset Manager, the Affiliated Broker-Dealer, or an affiliate for their own employees, for which the Asset Manager, the Affiliated Broker-Dealer, or an affiliate exercises investment discretion.

(r) The Asset Manager and the Affiliated Broker-Dealer maintain, or cause to be maintained, for a period of six years from the date of any covered transaction such records as are necessary to enable the persons described in paragraph(s) of this exemption to determine whether the conditions of this exemption have been met, except that—

(1) no party in interest with respect to a Client Plan, other than the Asset Manager and the Affiliated Broker-Dealer, shall be subject to a civil penalty under section 502(i) of the Act or the taxes imposed by section 4975(a) and (b) of the Code, if such records are not maintained, or not available for examination, as required by paragraph (s); and

(2) a prohibited transaction shall not be considered to have occurred if, due to circumstances beyond the control of the Asset Manager or the Affiliated Broker-Dealer, such records are lost or destroyed prior to the end of the six-year period.

(s)(1) Except as provided in subparagraph (2) of this paragraph (s) and notwithstanding any provisions of subsections (a)(2) and (b) of section 504 of the Act, the records referred to in paragraph (r) are unconditionally available at their customary location for examination during normal business hours by—

(i) any duly authorized employee or representative of the Department, the Internal Revenue Service, or the SEC; or

(ii) any fiduciary of a Client Plan, or any duly authorized employee or representative of such fiduciary; or

(iii) any employer of participants and beneficiaries and any employee organization whose members are covered by a Client Plan, or any authorized employee or representative of these entities; or

(iv) any participant or beneficiary of a Client Plan, or duly authorized employee or representative of such participant or beneficiary;

(2) none of the persons described in paragraphs (s)(1)(ii)–(iv) shall be authorized to examine trade secrets of the Asset Manager or the Affiliated Broker-Dealer, or commercial or financial information which is privileged or confidential; and

(3) should the Asset Manager or the Affiliated Broker-Dealer refuse to disclose information on the basis that such information is exempt from disclosure pursuant to paragraph (s)(2) above, the Asset Manager shall, by the close of the thirtieth (30th) day following the request, provide a written notice advising that person of the reasons for the refusal and that the Department may request such information.

Section II—Definitions

(a) The term ''Asset Manager'' means any asset management affiliate of the Applicant (as ''affiliate'' is defined in paragraph (c)) that meets the requirements of this exemption.

(b) The term ''Affiliated Broker-Dealer'' means any broker-dealer affiliate of the Applicant (as ''affiliate'' is defined in paragraph (c)) that meets the requirements of this exemption. Such Affiliated Broker-Dealer may participate in an underwriting or selling syndicate as a manager or member. The term ''manager'' means any member of an underwriting or selling syndicate who, either alone or together with other members of the syndicate, is authorized to act on behalf of the members of the syndicate in connection with the sale and distribution of the securities being offered, or who receives compensation from the members of the syndicate for its services as a manager of the syndicate.

(c) The term ''affiliate'' of a person includes:

(1) any person directly or indirectly through one or more intermediaries, controlling, controlled by, or under common control with such person;

(2) any officer, director, partner, employee, or relative (as defined in section 3(15) of the Act) of such person; and

(3) any corporation or partnership of which such person is an officer, director, partner, or employee.

(d) The term ''control'' means the power to exercise a controlling influence over the management or policies of a person other than an individual.

(e) The term ''Client Plan'' means an employee benefit plan that is subject to the fiduciary responsibility provisions of the Act and whose assets are under the management of the Asset Manager, including a plan investing in a Pooled Fund (as ''Pooled Fund'' is defined in paragraph (f) below).

(f) The term ''Pooled Fund'' means a common or collective trust fund or pooled investment fund maintained by the Asset Manager.

(g)(1) The term ''Independent Fiduciary'' means a fiduciary of a Client Plan who is unrelated to, and independent of, the Asset Manager and the Affiliated Broker-Dealer. For purposes of this exemption, a Client Plan fiduciary will be deemed to be unrelated to, and independent of, the Asset Manager and the Affiliated Broker-Dealer if such fiduciary represents that neither such fiduciary, nor any individual responsible for the decision to authorize or terminate authorization for transactions described in Section I, is an officer, director, or highly compensated employee (within the meaning of section 4975(e)(2)(H) of the Code) of the Asset Manager or the Affiliated Broker-Dealer and represents that such fiduciary shall advise the Asset Manager if those facts change.

(2) Notwithstanding anything to the contrary in this Section II(g), a fiduciary is not independent if:

(i) such fiduciary directly or indirectly controls, is controlled by, or is under common control with the Asset Manager or the Affiliated Broker-Dealer;

(ii) such fiduciary directly or indirectly receives any compensation or other consideration from the Asset Manager or the Affiliated Broker-Dealer for his or her own personal account in connection with any transaction described in this exemption;

(iii) any officer, director, or highly compensated employee (within the meaning of section 4975(e)(2)(H) of the Code) of the Asset Manager, responsible for the transactions described in Section I, is an officer, director, or highly compensated employee (within the meaning of section 4975(e)(2)(H) of the

Code) of the Client Plan sponsor or of the fiduciary responsible for the decision to authorize or terminate authorization for transactions described in Section I. However, if such individual is a director of the Client Plan sponsor or of the responsible fiduciary, and if he or she abstains from participation in (A) the choice of the Plan's investment manager/adviser and (B) the decision to authorize or terminate authorization for transactions described in Section I, then Section II (g)(2)(iii) shall not apply.

(3) The term ''officer'' means a president, any vice president in charge of a principal business unit, division or function (such as sales, administration or finance), or any other officer who performs a policy-making function for the entity.

(4) In the case of existing Client Plans in a Pooled Fund, at the time the Asset Manager provides such Client Plans with initial notice pursuant to this exemption, the Asset Manager will notify the fiduciaries of such Client Plans that they must advise the Asset Manager, in writing, if they are not independent, within the meaning of this Section II (g).

(h) The term ''security'' shall have the same meaning as defined in section 2(36) of the Investment Company Act of 1940 (the 1940 Act), as amended (15 U.S.C. 80a–2(36)(1996)). For purposes of this exemption, mortgage-backed or other asset-backed securities rated by a Rating Organization will be treated as debt securities.

(i) The term ''Eligible Rule 144A Offering'' shall have the same meaning as defined in SEC Rule 10f–3(a)(4) (17 CFR 270. 10f–3(a)(4)) under the 1940 Act.

(j) The term ''qualified institutional buyer'' or ''QIB'' shall have the same meaning as defined in SEC Rule 144A (17 CFR 230.144A(a)(1)) under the 1933 Act.

(k) The term ''Rating Organizations'' means Standard & Poor's Rating Services, Moody's Investors Service, Inc., Duff & Phelps Credit Rating Co., or Fitch IBCA, Inc., or their successors.

Signed at Washington, D.C., this 25th day of May, 2000.

Ivan L. Strasfeld,

Director of Exemption Determinations, Pension and Welfare Benefits Administration, U.S. Department of Labor.

[FR Doc. 00–13641 Filed 5–31–00; 8:45 am]

BILLING CODE 4510–29–P

PENSION AND WELFARE BENEFITS ADMINISTRATION

[Application Nos. D–10809 and D–10865]

Notice of Proposed Individual Exemption to Amend and Replace Prohibited Transaction Exemption (PTE) 99–15, Involving Salomon Smith Barney Inc., Located in New York, NY

AGENCY: Pension and Welfare Benefits Administration, U.S. Department of Labor.

ACTION: Notice of proposed individual exemption to modify and replace PTEs 99–15.

SUMMARY: This document contains a notice of pendency before the Department of Labor (the Department) of a proposed and replacement individual exemption which, if granted, would amend PTE 99–15 (64 FR 1648, April 5, 1999), an exemption granted to Salomon Smith Barney. PTE 99–15 relates to the operation of the TRAK Personalized Investment Advisory Service product (the TRAK Program) and the Trust for Consulting Group Capital Markets Funds (the Trust). If granted, the proposed exemption would affect participants and beneficiaries of and fiduciaries with respect to employee benefit plans (the Plans) participating in the TRAK Program.

EFFECTIVE DATE: If granted, the proposed amendment will be effective as of April 1, 2000.

DATES: Written comments and requests for a public hearing should be received by the Department on or before July 17, 2000.

ADDRESSES: All written comments and requests for a public hearing (preferably, three copies) should be sent to the Office of Exemption Determinations, Pension and Welfare Benefits Administration, Room N–5649, U.S. Department of Labor, 200 Constitution Avenue, NW, Washington, DC 20210, Attention: Application Nos. D–10809 and D–10865. The applications pertaining to the proposed exemption and the comments received will be available for public inspection in the Public Documents Room of the Pension and Welfare Benefits Administration, U.S. Department of Labor, Room N–5507, 200 Constitution Avenue, NW, Washington, DC 20210.

FOR FURTHER INFORMATION CONTACT: Ms. Jan D. Broady, Office of Exemption Determinations, Pension and Welfare Benefits Administration, U.S. Department of Labor, telephone (202) 219–8881. (This is not a toll-free number.)

SUPPLEMENTARY INFORMATION: Notice is hereby given of the pendency before the Department of a proposed exemption that would amend and replace PTE 99–15. PTE 99–15, provides an exemption from certain prohibited transaction restrictions of section 406 of the Employee Retirement Income Security Act of 1974 (the Act) and from the sanctions resulting from the application of section 4975 of the Internal Revenue Code of 1986 (the Code), as amended, by reason of section 4975(c)(1) of the Code. Specifically, PTE 99–15 provides exemptive relief from the restrictions of section 406(a) of the Act and the sanctions resulting from the application of section 4975 of the Code, by reason of section 4975(c)(1)(A) through (D) of the Code, for the purchase or redemption of shares in the Trust by an employee benefit plan, an individual retirement account (the IRA), a retirement plan for a self-employed individual (the Keogh Plan), or an individual account pension plan that is subject to the provisions of Title I of the Act and established under section 403(b) of the Code (the Section 403(b) Plan).

PTE 99–15 also provides exemptive relief from the restrictions of section 406(b) of the Act and the sanctions resulting from the application of section 4975 of the Code, by reason of section 4975(c)(1)(E) and (F) of the Code, with respect to the provision, by the Consulting Group of Salomon Smith Barney (the Consulting Group), of (1) investment advisory services or (2) an automatic reallocation option to an independent fiduciary of a participating Plan (the Independent Plan Fiduciary) which may result in such fiduciary's selection of a portfolio (the Portfolio) in the TRAK Program for the investment of Plan assets.[1]

[1] PTE 99–15 also (a) described a series of corporate mergers which changed the names of the parties identified in two prior TRAK exemptions which it superseded [*i.e.,* PTE 94–50 (59 FR 32024, June 21, 1994) and PTE 92–77 (55 FR 45833, October 5, 1992)] and which would permit broader distribution of TRAK-related products; (b) implemented a recordkeeping reimbursement offset procedure under the TRAK Program; (c) adopted an automated reallocation option under the TRAK Program that would reduce the asset allocation (or ''outside'') fee paid to Salomon Smith Barney by a Plan investor; and (d) expanded the scope of the exemption to include Section 403(b) Plans.

PTE 94–50 permitted Smith, Barney Inc. (Smith Barney), Salomon Smith Barney's predecessor, to add a daily-traded collective investment fund (the GIC Fund) to the existing Fund portfolios and to describe the various entities operating the GIC Fund. PTE 94–50 also replaced references to Shearson Lehman Brothers, Inc. (Shearson Lehman) with Smith Barney and amended and replaced PTE 92–77.

Finally, PTE 92–77 permitted Shearson Lehman to make the TRAK Program available to Plans that

As of December 31, 1998, the TRAK Program held assets that were in excess of $9.6 billion. Of those assets, approximately $1.9 billion were held in 407 Plan accounts having cash or deferred compensation arrangements and approximately $4.2 billion were held in more than 59,000 employee benefit plan and IRA/Keogh-type Plan accounts. At present, the Trust consists of 17 Portfolios that are managed by the Consulting Group and advised by one or more unaffiliated sub-advisers selected by Salomon Smith Barney.

Salomon Smith Barney requests a modification of PTE 99–15 and a replacement of that exemption with a new exemption for purposes of uniformity.[2] Specifically, Salomon Smith Barney requests that the term ''affiliate,'' as set forth in PTE 99–15, in Section II(h) of the General Conditions and in Section III(b) of the Definitions, be amended and clarified to avoid possible misinterpretation. In this regard, Salomon Smith Barney also requests that the term ''officer'' be defined and incorporated into the proposed exemption, in new Section III(d), to limit the affiliate definition to persons who have a significant management role. Further, Salomon Smith Barney requests that Section II(i) of PTE 99–15 be amended to permit an independent sub-adviser (the Sub-Adviser), under certain circumstances, to exceed the current one percent limitation on the acquisition of securities that are issued by Salomon Smith Barney and/or its affiliates, notably in the Sub-Adviser's replication of a third-party index. If granted, the proposed exemption would be effective as of April 1, 2000.

The proposed exemption has been requested in an application filed on behalf of Salomon Smith Barney pursuant to section 408(a) of the Act and section 4975(c)(2) of the Code, and in accordance with the procedures set forth in 29 CFR Part 2570, Subpart B (55 FR 32836, August 10, 1990). Effective December 31, 1978, section 102 of Reorganization Plan No. 4 of 1978 (43 FR 47713, October 17, 1978) transferred the authority of the Secretary of the Treasury to issue exemptions of the type requested to the Secretary of Labor. Accordingly, the proposed exemption is being issued solely by the Department.

I. Proposed Modification of the Term ''Affiliate''

Salomon Smith Barney represents that in early December 1999, Citigroup and State Street Corporation announced an agreement to form a joint venture called CitiStreet LLC, a Delaware limited liability company (the Joint Venture). The Joint Venture, which was closed on April 1, 2000, is each 50 percent owned by Keeper Holdings LLC (Citi), a wholly owned subsidiary of Citigroup, and by State Street Bank and Trust Company (State Street), a wholly owned subsidiary of State Street Corporation. Both Citigroup and State Street Corporation are publicly-held corporations.

Salomon Smith Barney explains that the formation of the Joint Venture may have resulted in the disqualification of State Street Global Advisers (SSgA), a division of State Street, from acting as a Sub-Adviser in the TRAK Program due to certain ambiguities in the meaning of the word ''affiliate.'' Salomon Smith Barney represents that SSgA is currently a Sub-Adviser with respect to approximately $800 million in assets in the International Equity Investments Portfolio and the Emerging Markets Equity Investments Portfolio.

A. Sections II(h) and III(b)

Section II(h) of PTE 99–15 provides that—

> Any sub-adviser (the Sub-Adviser) that acts for the Trust to exercise investment discretion over a Portfolio will be independent of Salomon Smith Barney and its affiliates.

Although the term ''independent'' is not defined in the exemption, Salomon Smith Barney notes that this condition was added to the original Shearson Lehman exemption request when Shearson Lehman agreed not to use affiliated Sub-Advisers. Therefore, Salomon Smith Barney presumes that the term ''independent'' means ''not an affiliate.''

Salomon Smith Barney represents that Section III(b) of PTE 99–15 defines the term ''affiliate'' of Salomon Smith Barney to include:

> (1) Any person directly or indirectly through one or more intermediaries, controlling, controlled by, or under common control with Salomon Smith Barney. (For purposes of this subparagraph, the term ''control'' means the power to exercise a controlling influence over the management or policies of a person other than an individual.)
>
> (2) Any officer, director or partner in such person, and
>
> (3) Any corporation or partnership of which such person is an officer, director or a 5 percent partner or owner.

Salomon Smith Barney notes that problems of interpretation have arisen because subparagraphs (2) and (3) of the affiliate definition use the term ''such person'' rather than referring directly to Salomon Smith Barney. Salomon Smith Barney explains that when defining an ''affiliate'' of Salomon Smith Barney, the definition may be construed to encompass only relationships with Salomon Smith Barney that involve shared control, influence or economic interests or it could be interpreted to cover affiliates of Salomon Smith Barney's affiliates, where there is no basis for common management or identical economic interests, because subparagraphs (2) and (3) have no clear antecedents.

Salomon Smith Barney asserts that State Street is not under common corporate control with either it or any of its corporate affiliates. Instead, State Street is a subsidiary of an independently-owned and managed public company. Therefore, there is no control relationship, as contemplated in subparagraph (1) of Section III(b), between Citigroup and State Street Corporation, the respective parent companies of Salomon Smith Barney and of State Street. Salomon Smith Barney also states that the Joint Venture is not necessarily its affiliate under subparagraph (1) of the definition because Salomon Smith Barney's indirect 50 percent ownership interest in the Joint Venture is not a ''controlling interest.'' Therefore, if the Joint Venture is not an affiliate, Salomon Smith Barney believes that State Street is not a partner of Salomon Smith Barney, nor an officer or director of Salomon Smith Barney, as contemplated in subparagraph (2) of Section III(b). Further, Salomon Smith Barney explains that State Street's exclusive ownership by State Street Corporation does not trigger the ownership provisions of subparagraph (3) of Section III(b).

In addition to the above, Salomon Smith Barney states that it will not exercise control or influence in the operation of the Joint Venture that will inure to State Street. In addition, Salomon Smith Barney represents that Citi will not exercise control of the Joint Venture because it has only a 50 percent interest. Further, since all significant corporate actions of the Joint Venture will require unanimity, Salomon Smith Barney explains that neither Citi nor State Street will be able to exercise exclusive control over the Joint Venture.

---

acquired shares in the former Trust for TRAK Investments and allowed the Consulting Group to provide investment advisory services to an Independent Plan Fiduciary which might result in such fiduciary's selection of a Portfolio in the TRAK Program for the investment of Plan assets.

[2] The Department deems PTE 94–50 as having been effectively superseded by PTE 99–15. Therefore, the proposed amendments described herein will not apply to PTE 94–50.

B. Proposed Amendment

Salomon Smith Barney submits that subparagraph (1) of Section III(b) does not require any clarification. However, it proposes that subparagraphs (2) and (3) of the affiliate definition be modified to cover only those persons and entities that have a significant role in the decisions made by Salomon Smith Barney or which are managed or influenced by Salomon Smith Barney. These entities or persons include individual officers, directors and partners in Salomon Smith Barney and its corporate affiliates, and corporations and partnerships in which Salomon Smith Barney and its corporate affiliates have a 10 percent or greater interest. Salomon Smith Barney believes that this tailoring of the affiliate definition will avoid future problems in determining the independence of the Sub-Advisers, including SSgA.

Thus, on the basis of the foregoing, Section III(b) of PTE 99–15 is hereby modified in this notice of proposed exemption to read as follows:

(b) An ''affiliate'' of Salomon Smith Barney includes—

(1) Any person directly or indirectly through one or more intermediaries, controlling, controlled by, or under common control with Salomon Smith Barney; (For purposes of this subparagraph, the term ''control'' means the power to exercise a controlling influence over the management or policies of a person other than an individual.)

(2) Any individual who is an officer, director or partner in Salomon Smith Barney or a person who is described in subparagraph (b)(1);

(3) Any corporation or partnership of which Salomon Smith Barney or an affiliate described in subparagraph (b)(1), is a 10 percent or more partner or owner; and

(4) Any corporation or partnership of which any individual which is an officer or director of Salomon Smith Barney, is a 10 percent or more partner or owner.

In connection with the revised affiliate definition, Salomon Smith Barney requests that the term ''officer'' be defined in new subparagraph (d) of Section III to limit this portion of the affiliate definition to individuals who have a significant management role. Salomon Smith Barney points out that there are job titles at fairly modest levels of authority within it as well as in any company, and it wishes to ensure that future factual inquiries into an individual's status as an affiliate do not require that it contact virtually every official in its corporate population in a due diligence effort. Therefore, Salomon Smith Barney proposes that Section III(d) should read as follows:

The term ''officer'' means a president, any vice president in charge of a principal business unit, division or function (such as sales, administration or finance), or any other officer who performs a policy-making function for the entity.

Under the foregoing modifications, Salomon Smith Barney believes that Sections II(h) and III(b) of the proposed exemption will no longer have conflicting meanings.

II. Proposed Modification of the One Percent Limitation on Stock Issued by Salomon Smith Barney and/or Its Affiliates

Salomon Smith Barney represents that there are a number of established market indexes that have been created by parties which are unaffiliated with Citigroup, its indirect parent. For example, the S&P 500 Index is a widely-used benchmark index of domestic equity performance. This index consists of 500 stocks that have been selected by the Standard & Poor's Company (S&P) for market capitalization, liquidity and industry group representation. The index is market-value weighted so the performance of the larger of the included companies has a greater impact on the performance of the index as a whole. Currently, the common stock (the Common Stock) of Citigroup represents 1.57 percent of the S&P 500 Index.

In addition to the S&P 500 Index, Salomon Smith Barney explains that the Russell 3000 Index is composed of the 3,000 largest United States companies, based upon total market capitalization. Salomon Smith Barney also points out that there are a number of Russell Indexes which are based on subsets of the Russell 3000 Index. These Indexes include (a) the Russell 2000 Index, which measures the performance of the smallest 2,000 United States companies in the Russell 3000 Index and therefore, excludes Citigroup; and (b) the Russell 1000 Index, which measures the performance of the 1,000 largest United States companies in the Russell 3000 Value Index and includes Citigroup. In addition, Salomon Smith Barney represents that there are further subsets of the Russell Indexes which are based upon Russell's characterization of stock as either ''Growth'' or ''Value.'' For example, Salomon Smith Barney explains that Citigroup is included within these subsets. As of March 31, 2000, Citigroup Common Stock represented 3.8981 percent of the Russell 1000 Value Index and 3.6343 percent of the Russell 3000 Value Index.

A. Section II(i)

Based upon the foregoing descriptions of the stock indexes, Salomon Smith Barney requests that Section II(i) of PTE 99–15 be modified in order to permit an independent Sub-Adviser which manages the assets in a Portfolio to exceed the one percent investment limitation on securities issued by Salomon Smith Barney and/or its affiliates under certain circumstances. As currently drafted, Section II(i) states that—

Immediately following the acquisition by a Portfolio of any securities that are issued by Salomon Smith Barney and/or its affiliates, the percentage of that Portfolio's net assets invested in such securities will not exceed one percent.

In other words, the exception will apply to ''any higher percentage'' which may result from a Sub-Adviser's management of an index fund (the Index Fund) Portfolio which includes Citigroup Common Stock. The index will be an established third party index and the Sub-Adviser will track the index results using the ''passive full replication'' trading method.[3]

Because the Sub-Adviser will purchase and sell Citigroup Common Stock to approximate the performance of an index rather than reflect the Sub-Adviser's evaluation of the Common Stock in its individual merits, Salomon Smith Barney states that any additional investment by a Portfolio in Citigroup Common Stock over the one percent threshold will result from the implementation of the trading method and not from the Sub-Adviser's exercise of investment discretion.

Due to the one percent limitation of Section II(i), Salomon Smith Barney states that active Sub-Advisers for the Consulting Group may not own or trade Citigroup Common Stock and they will continue to be prohibited from trading in Citigroup Common Stock. However, Salomon Smith Barney proposes that passive or pure Index Fund Sub-Advisers be permitted to hold Citigroup Common Stock in their portfolios which exceed the one percent limitation to the extent such higher percentage is necessary to replicate the underlying index.[4] Salomon Smith Barney points

[3] According to Salomon Smith Barney, there are two forms of index trading—passive full replication (wherein each stock in the same weightings as the index is owned by a mutual fund) and sampling (in which each sector, but not necessarily all stocks in such sector, in the same weightings as the index is also owned by a mutual fund). Salomon Smith Barney notes that sampling is used most often when a portfolio is smaller and cannot efficiently replicate the entire index.

[4] In its management of a ''pure'' Index Fund, the Sub-Adviser does not evaluate individual companies to identify attractive investment candidates or to eliminate underperforming investments. Instead, the Sub-Adviser attempts to mirror the composition of the relevant index as closely as possible by adjusting the Portfolio holdings daily to reflect the companies included in

out that pure index Sub-Advisers that are responsible for investing only a portion of the assets in the Consulting Group Capital Markets Large Cap Value Fund and the Large Cap Growth Consulting Group Capital Markets Fund, are currently in compliance with the one percent limitation. These Portfolios, which consist of both an actively-managed portion and a distinct, passively-managed portion, held less than one percent of the their total assets in Citigroup Common Stock.

If an index-based Sub-Adviser were to manage a greater portion or all of either of the aforementioned Portfolios, Salomon Smith Barney explains that the total Portfolio may include Citigroup Common Stock which breaches the one percent threshold. Similarly, Salomon Smith Barney notes that if the entire Portfolio, such as the Consulting Group Capital Markets S&P 500 Index Investment Fund Portfolio, has the investment objective of providing results that correspond to the price and yield performance of the S&P 500 Index, the Sub-Adviser would be expected to approximate the cited percentage of 1.57 percent for Citigroup Common Stock in the S&P 500 Index. This would also violate the one percent investment limitation.

Salomon Smith Barney states that the present one percent limitation placed on Citigroup Common Stock increases the likelihood that the performance of an Index Fund Portfolio will not replicate the applicable index. Because Citigroup is among the largest companies on the basis of capitalization in the S&P 500, Salomon Smith Barney states that Citigroup's performance can have a significant impact in index performance calculations. However, if Citigroup Common Stock is not proportionately represented, Salomon Smith Barney explains that Index Fund performance will deviate from the index whether Citigroup Common Stock does well or underperforms.

In any event, Salomon Smith Barney believes that the one percent limitation has the effect of depriving a Plan of the opportunity to invest in a Fund (available to non-Plan investors) that might otherwise track the applicable index more exactly. Because many Plan sponsors are anxious to have an Index Fund available through the TRAK Program, Salomon Smith Barney wishes to move quickly to accommodate the Plan market's design preferences.

For these reasons, Salomon Smith Barney requests that the current one percent restriction be lifted and allowed to be exceeded with respect to Portfolio investments that are made by passive Sub-Advisers in Citigroup Common Stock in their replication of third-party indexes. In addition, Salomon Smith Barney seeks the flexibility to have the Portfolios consist, in whole or in part, of Index Funds that are managed by passive Sub-Advisers. However, the ownership by a Portfolio of Citigroup Common Stock which is in excess of the one percent limitation would result solely from the activities of the passive Sub-Adviser in replicating an index.

B. Exemptive Safeguards

Section II(i) of the proposed exemption has been further expanded to include a number of substantive safeguards for the protection of Plans investing under the TRAK Program. In this regard, Section II(i) requires that the amount held by the Sub-Adviser in managing an Index Fund Portfolio be held in order to replicate an established third party index. In addition, Section II(i) states that the index must represent the investment performance of a specific segment of the public market for equity securities in the United States and/or foreign countries. In this regard, the organization creating the index must be (a) engaged in the business of providing financial information; (b) a publisher of financial news information; or (c) a public stock exchange or association of securities dealers. The index must also be created and maintained by an organization independent of Salomon Smith Barney and its affiliates and must be a generally-accepted standardized index of securities which is not specifically tailored for use by Salomon Smith Barney and its affiliates.

Moreover, Section II(i) requires that the acquisition or disposition of Citigroup Common Stock must not include any agreement, arrangement or understanding regarding the design or operation of the Portfolio acquiring the Citigroup Common Stock, which is intended to benefit Salomon Smith Barney or any party in which Salomon Smith Barney may have an interest.

Finally, Section II(i) requires that an Independent Plan Fiduciary authorize the investment of a Plan's assets in an Index Fund Portfolio which purchases and/or holds Citigroup Common Stock while the Sub-Adviser will be responsible for voting any shares of Citigroup Common Stock that are held by an Index Fund on any matter in which shareholders of Citigroup Common Stock are required or permitted to vote.

Notice to Interested Persons

Notice of the proposed exemption will be mailed by first class mail to the Independent Plan Fiduciary Plan of each Plan currently participating in the TRAK Program, or, in the case of a Section 404(c) Plan, to the recordholder of Trust shares. Such notice will be given within 15 days of the publication of the notice of pendency in the **Federal Register**. The notice will contain a copy of the notice of proposed exemption as published in the **Federal Register** and a supplemental statement, as required pursuant to 29 CFR 2570.43(b)(2). The supplemental statement will inform interested persons of their right to comment on and/or to request a hearing with respect to the pending exemption. Written comments and hearing requests are due within 45 days of the publication of the proposed exemption in the **Federal Register**.

General Information

The attention of interested persons is directed to the following:

(1) The fact that a transaction is the subject of an exemption under section 408(a) of the Act and section 4975(c)(2) of the Code does not relieve a fiduciary or other party in interest or disqualified person from certain other provisions of the Act and the Code, including any prohibited transaction provisions to which the exemption does not apply and the general fiduciary responsibility provisions of section 404 of the Act, which require, among other things, a fiduciary to discharge his or her duties respecting the plan solely in the interest of the participants and beneficiaries of the plan and in a prudent fashion in accordance with section 404(a)(1)(B) of the Act; nor does it affect the requirements of section 401(a) of the Code that the plan operate for the exclusive benefit of the employees of the employer maintaining the plan and their beneficiaries;

(2) The proposed exemption, if granted, will extend to transactions prohibited under section 406(b)(3) of the Act and section 4975(c)(1)(F) of the Code;

---

the index and their relative weightings. Because performance of the Index Fund is tied to the performance of the index that it tracks, investors are advised that this investment strategy may mean losses if the applicable index performs poorly relative to other indexes or individual stocks.

The performance of a pure Index Fund generally does not mirror the index performance exactly. The index is merely a composite performance figure, based upon an established selection of companies. It does not represent actual assets being managed so there are no expenses deducted from its performance results. In contrast, an Index Fund Portfolio represents actual assets under management and has liquidity requirements associated with Fund operation. To meet redemption requests and to pay expenses, the Index Fund must maintain a portion of its assets in cash and cash equivalents.

(3) Before an exemption can be granted under section 408(a) of the Act and section 4975(c)(2) of the Code, the Department must find that the exemption is administratively feasible, in the interest of the plan and of its participants and beneficiaries and protective of the rights of participants and beneficiaries of the plan;

(4) This proposed exemption, if granted, will be supplemental to, and not in derogation of, any other provisions of the Act and the Code, including statutory or administrative exemptions. Furthermore, the fact that a transaction is subject to an administrative or statutory exemption is not dispositive of whether the transaction is in fact a prohibited transaction; and

(5) This proposed exemption, if granted, is subject to the express condition that the facts and representations set forth in the notice of proposed exemption relating to PTE 99–15 and this notice, accurately describe, where relevant, the material terms of the transactions to be consummated pursuant to this exemption.

Written Comments and Hearing Requests

All interested persons are invited to submit written comments or requests for a hearing on the pending exemption to the address above, within the time frame set forth above, after the publication of this proposed exemption in the **Federal Register**. All comments will be made a part of the record. Comments received will be available for public inspection with the referenced applications at the address set forth above.

Proposed Exemption

Based on the facts and representations set forth in the application, the Department is considering granting the requested exemption under the authority of section 408(a) of the Act and section 4975(c)(2) of the Code and in accordance with the procedures set forth in 29 CFR Part 2570, Subpart B (55 FR 32836, August 10, 1990).

Section I. Covered Transactions

A. If the exemption is granted, the restrictions of section 406(a) of the Act and the sanctions resulting from the application of section 4975 of the Code, by reason of section 4975(c)(1)(A) through (D) of the Code, shall not apply, to the purchase or redemption of shares by an employee benefit plan, an individual retirement account (the IRA), a retirement plan for self-employed individuals (the Keogh Plan), or an individual account pension plan that is subject to the provisions of Title I of the Act and established under section 403(b) of the Code (the Section 403(b) Plan; collectively, the Plans) in the Trust for Consulting Group Capital Market Funds (the Trust), established by Salomon Smith Barney, in connection with such Plans' participation in the TRAK Personalized Investment Advisory Service product (the TRAK Program).

B. If the exemption is granted, the restrictions of section 406(b) of the Act and the sanctions resulting from the application of section 4975 of the Code, by reason of section 4975(c)(1)(E) and (F) of the Code, shall not apply, to the provision, by the Consulting Group, of (1) investment advisory services or (2) an automatic reallocation option (the Automatic Reallocation Option) to an independent fiduciary of a participating Plan (the Independent Plan Fiduciary), which may result in such fiduciary's selection of a portfolio (the Portfolio) in the TRAK Program for the investment of Plan assets.

This proposed exemption is subject to the following conditions that are set forth below in Section II.

Section II. General Conditions

(a) The participation of Plans in the TRAK Program will be approved by an Independent Plan Fiduciary. For purposes of this requirement, an employee, officer or director of Salomon Smith Barney and/or its affiliates covered by an IRA not subject to Title I of the Act will be considered an Independent Plan Fiduciary with respect to such IRA.

(b) The total fees paid to the Consulting Group and its affiliates will constitute no more than reasonable compensation.

(c) No Plan will pay a fee or commission by reason of the acquisition or redemption of shares in the Trust.

(d) The terms of each purchase or redemption of Trust shares shall remain at least as favorable to an investing Plan as those obtainable in an arm's length transaction with an unrelated party.

(e) The Consulting Group will provide written documentation to an Independent Plan Fiduciary of its recommendations or evaluations based upon objective criteria.

(f) Any recommendation or evaluation made by the Consulting Group to an Independent Plan Fiduciary will be implemented only at the express direction of such Independent Plan Fiduciary, provided, however, that—

(1) If such Independent Plan Fiduciary shall have elected in writing (the Election), on a form designated by Salomon Smith Barney from time to time for such purpose, to participate in the Automatic Reallocation Option under the TRAK Program, the affected Plan or participant account will be automatically reallocated whenever the Consulting Group modifies the particular asset allocation recommendation which the Independent Plan Fiduciary has chosen. Such Election shall continue in effect until revoked or terminated by the Independent Plan Fiduciary in writing.

(2) Except as set forth below in paragraph II(f)(3), at the time of a change in the Consulting Group's asset allocation recommendation, each account based upon the asset allocation model (the Allocation Model) affected by such change would be adjusted on the business day of the release of the new Allocation Model by the Consulting Group, except to the extent that market conditions, and order purchase and redemption procedures may delay such processing through a series of purchase and redemption transactions to shift assets among the affected Portfolios.

(3) If the change in the Consulting Group's asset allocation recommendation exceeds an increase or decrease of more than 10 percent in the absolute percentage allocated to any one investment medium (*e.g.,* a suggested increase in a 15 percent allocation to greater than 25 percent, or a decrease of such 15 percent allocation to less than 5 percent), Salomon Smith Barney will send out a written notice (the Notice) to all Independent Plan Fiduciaries whose current investment allocation would be affected, describing the proposed reallocation and the date on which such allocation is to be instituted (the Effective Date). If the Independent Plan Fiduciary notifies Salomon Smith Barney, in writing, at any time within the period of 30 calendar days prior to the proposed Effective Date that such fiduciary does not wish to follow such revised asset allocation recommendation, the Allocation Model will remain at the current level, or at such other level as the Independent Plan Fiduciary then expressly designates, in writing. If the Independent Plan Fiduciary does not affirmatively ''opt out'' of the new Consulting Group recommendation, in writing, prior to the proposed Effective Date, such new recommendation will be automatically effected by a dollar-for-dollar liquidation and purchase of the required amounts in the respective account.

(4) An Independent Plan Fiduciary will receive a trade confirmation of each reallocation transaction. In this regard, for all Plan investors other than Section 404(c) Plan accounts (*i.e.,* 401(k) Plan

accounts), Salomon Smith Barney will mail trade confirmations on the next business day after the reallocation trades are executed. In the case of Section 404(c) Plan participants, notification will depend upon the notification provisions agreed to by the Plan recordkeeper.

(g) The Consulting Group will generally give investment advice in writing to an Independent Plan Fiduciary with respect to all available Portfolios. However, in the case of a Plan providing for participant-directed investments (the Section 404(c) Plan), the Consulting Group will provide investment advice that is limited to the Portfolios made available under the Plan.

(h) Any sub-adviser (the Sub-Adviser) that acts for the Trust to exercise investment discretion over a Portfolio will be independent of Salomon Smith Barney and its affiliates.

(i) Immediately following the acquisition by a Portfolio of any securities that are issued by Salomon Smith Barney and/or its affiliates, such as Citigroup Inc. common stock (the Citigroup Common Stock), the percentage of that Portfolio's net assets invested in such securities will not exceed one percent. However, this percentage limitation may be exceeded if—

(1) The amount held by a Sub-Adviser in managing a Portfolio is held in order to replicate an established third party index.

(2) The index represents the investment performance of a specific segment of the public market for equity securities in the United States and/or foreign countries. The organization creating the index must be—

(i) Engaged in the business of providing financial information;

(ii) A publisher of financial news information; or

(iii) A public stock exchange or association of securities dealers.

The index is created and maintained by an organization independent of Salomon Smith Barney and its affiliates and is a generally-accepted standardized index of securities which is not specifically tailored for use by Salomon Smith Barney and its affiliates.

(3) The acquisition or disposition of Citigroup Common Stock does not include any agreement, arrangement or understanding regarding the design or operation of the Portfolio acquiring the Citigroup Common Stock, which is intended to benefit Salomon Smith Barney or any party in which Salomon Smith Barney may have an interest.

(4) The Independent Plan Fiduciary authorizes the investment of a Plan's assets in an Index Fund which purchases and/or holds Citigroup Common Stock and the Sub-Adviser is responsible for voting any shares of Citigroup Common Stock that are held by an Index Fund on any matter in which shareholders of Citigroup Common Stock are required or permitted to vote.

(j) The quarterly investment advisory fee that is paid by a Plan to the Consulting Group for investment advisory services rendered to such Plan will be offset by such amount as is necessary to assure that the Consulting Group retains no more than 20 basis points from any Portfolio (with the exception of the Government Money Investments Portfolio and the GIC Fund Portfolio for which the Consulting Group and the Trust will retain no investment management fee) which contains investments attributable to the Plan investor.

(k) With respect to its participation in the TRAK Program prior to purchasing Trust shares,

(1) Each Plan will receive the following written or oral disclosures from the Consulting Group:

(A) A copy of the Prospectus for the Trust discussing the investment objectives of the Portfolios comprising the Trust, the policies employed to achieve these objectives, the corporate affiliation existing between the Consulting Group, Salomon Smith Barney and its subsidiaries and the compensation paid to such entities.[5]

(B) Upon written or oral request to Salomon Smith Barney, a Statement of Additional Information supplementing the Prospectus which describes the types of securities and other instruments in which the Portfolios may invest, the investment policies and strategies that the Portfolios may utilize and certain risks attendant to those investments, policies and strategies.

(C) A copy of the investment advisory agreement between the Consulting Group and such Plan relating to participation in the TRAK Program and, if applicable, informing Plan investors of the Automatic Reallocation Option.

(D) Upon written request of Salomon Smith Barney, a copy of the respective investment advisory agreement between the Consulting Group and the Sub-Advisers.

(E) In the case of a Section 404(c) Plan, if required by the arrangement negotiated between the Consulting Group and the Plan, an explanation by a Salomon Smith Barney Financial Consultant (the Financial Consultant) to eligible participants in such Plan, of the services offered under the TRAK Program and the operation and objectives of the Portfolios.

(F) A copy of the proposed exemption and the final exemption, if granted, pertaining to the exemptive relief described herein.

(2) If accepted as an investor in the TRAK Program, an Independent Plan Fiduciary of an IRA or Keogh Plan, is required to acknowledge, in writing, prior to purchasing Trust shares that such fiduciary has received copies of the documents described above in subparagraph (k)(1) of this Section.

(3) With respect to a Section 404(c) Plan, written acknowledgement of the receipt of such documents will be provided by the Independent Plan Fiduciary (i.e., the Plan administrator, trustee or named fiduciary, as the recordholder of Trust shares). Such Independent Plan Fiduciary will be required to represent in writing to Salomon Smith Barney that such fiduciary is (a) independent of Salomon Smith Barney and its affiliates and (b) knowledgeable with respect to the Plan in administrative matters and funding matters related thereto, and able to make an informed decision concerning participation in the TRAK Program.

(4) With respect to a Plan that is covered under Title I of the Act, where investment decisions are made by a trustee, investment manager or a named fiduciary, such Independent Plan Fiduciary is required to acknowledge, in writing, receipt of such documents and represent to Salomon Smith Barney that such fiduciary is (a) independent of Salomon Smith Barney and its affiliates, (b) capable of making an independent decision regarding the investment of Plan assets and (c) knowledgeable with respect to the Plan in administrative matters and funding matters related thereto, and able to make an informed decision concerning participation in the TRAK Program.

(l) Subsequent to its participation in the TRAK Program, each Plan receives the following written or oral disclosures with respect to its ongoing participation in the TRAK Program:

(1) The Trust's semi-annual and annual report which will include financial statement for the Trust and investment management fees paid by each Portfolio.

(2) A written quarterly monitoring statement containing an analysis and an

[5] The fact that certain transactions and fee arrangements are the subject of an administrative exemption does not relieve the Independent Plan Fiduciary from the general fiduciary responsibility provisions of section 404 of the Act. In this regard, the Department expects the Independent Plan Fiduciary to consider carefully the totality of the fees and expenses to be paid by the Plan, including the fees paid directly to Salomon Smith Barney or to other third parties.

evaluation of a Plan investor's account to ascertain whether the Plan's investment objectives have been met and recommending, if required, changes in Portfolio allocations.

(3) If required by the arrangement negotiated between the Consulting Group and a Section 404(c) Plan, a quarterly, detailed investment performance monitoring report, in writing, provided to an Independent Plan Fiduciary of such Plan showing, Plan level asset allocations, Plan cash flow analysis and annualized risk adjusted rates of return for Plan investments. In addition, if required by such arrangement, Financial Consultants will meet periodically with Independent Plan Fiduciaries of Section 404(c) Plans to discuss the report as well as with eligible participants to review their accounts' performance.

(4) If required by the arrangement negotiated between the Consulting Group and a Section 404(c) Plan, a quarterly participant performance monitoring report provided to a Plan participant which accompanies the participant's benefit statement and describes the investment performance of the Portfolios, the investment performance of the participant's individual investment in the TRAK Program, and gives market commentary and toll-free numbers that will enable the participant to obtain more information about the TRAK Program or to amend his or her investment allocations.

(5) On a quarterly and annual basis, written disclosures to all Plans of the (a) percentage of each Portfolio's brokerage commissions that are paid to Salomon Smith Barney and its affiliates and (b) the average brokerage commission per share paid by each Portfolio to Salomon Smith Barney and its affiliates, as compared to the average brokerage commission per share paid by the Trust to brokers other than Salomon Smith Barney and its affiliates, both expressed as cents per share.

(m) Salomon Smith Barney shall maintain, for a period of six years, the records necessary to enable the persons described in paragraph (n) of this Section to determine whether the conditions of this exemption have been met, except that (1) a prohibited transaction will not be considered to have occurred if, due to circumstances beyond the control of Salomon Smith Barney and/or its affiliates, the records are lost or destroyed prior to the end of the six year period, and (2) no party in interest other than Salomon Smith Barney shall be subject to the civil penalty that may be assessed under section 502(i) of the Act, or to the taxes imposed by section 4975(a) and (b) of the Code, if the records are not maintained, or are not available for examination as required by paragraph (n) below.

(n)(1) Except as provided in section (2) of this paragraph and notwithstanding any provisions of subparagraphs (a)(2) and (b) of section 504 of the Act, the records referred to in paragraph (m) of this Section II shall be unconditionally available at their customary location during normal business hours by:

(A) Any duly authorized employee or representative of the Department or the Service;

(B) Any fiduciary of a participating Plan or any duly authorized representative of such fiduciary;

(C) Any contributing employer to any participating Plan or any duly authorized employee representative of such employer; and

(D) Any participant or beneficiary of any participating Plan, or any duly authorized representative of such participant or beneficiary.

(2) None of the persons described above in subparagraphs (B)-(D) of this paragraph (n) shall be authorized to examine the trade secrets of Salomon Smith Barney or commercial or financial information which is privileged or confidential.

Section III. Definitions

For purposes of this proposed exemption:

(a) The term ''Salomon Smith Barney'' means Salomon Smith Barney Inc. and any affiliate of Salomon Smith Barney, as defined in paragraph (b) of this Section III.

(b) An ''affiliate'' of Salomon Smith Barney includes—

(1) Any person directly or indirectly through one or more intermediaries, controlling, controlled by, or under common control with Salomon Smith Barney; (For purposes of this subparagraph, the term ''control'' means the power to exercise a controlling influence over the management or policies of a person other than an individual.)

(2) Any individual who is an officer (as defined in Section III(d) hereof), director or partner in Salomon Smith Barney or a person described in subparagraph (b)(1);

(3) Any corporation or partnership of which Salomon Smith Barney or an affiliate described in subparagraphs(b)(1), is a 10 percent or more partner or owner; and

(4) Any corporation or partnership of which any individual which is an officer or director of Salomon Smith Barney, is a 10 percent or more partner or owner.

(c) An ''Independent Plan Fiduciary'' is a Plan fiduciary which is independent of Salomon Smith Barney and its affiliates and is either—

(1) A Plan administrator, sponsor, trustee or named fiduciary, as the recordholder of Trust shares under a Section 404(c) Plan;

(2) A participant in a Keogh Plan;

(3) An individual covered under (i) a self-directed IRA or (ii) a Section 403(b) Plan, which invests in Trust shares;

(4) A trustee, investment manager or named fiduciary responsible for investment decisions in the case of a Title I Plan that does not permit individual direction as contemplated by Section 404(c) of the Act; or

(5) A participant in a Plan, such as a Section 404(c) Plan, who is permitted under the terms of such Plan to direct, and who elects to direct the investment of assets of his or her account in such Plan.

(d) The term ''officer'' means a president, any vice president in charge of a principal business unit, division or function (such as sales, administration or finance), or any other officer who performs a policymaking function for the entity.

Section IV. Effective Dates

If granted, this proposed exemption will be effective as of April 1, 2000, with respect to the amendments to Section II(i) and Section III(b) and the inclusion of new Section III(d).

The availability of this proposed exemption is subject to the express condition that the material facts and representations contained in the application for exemption are true and complete and accurately describe all material terms of the transactions. In the case of continuing transactions, if any of the material facts or representations described in the applications change, the exemption will cease to apply as of the date of such change. In the event of any such change, an application for a new exemption must be made to the Department.

For a more complete statement of the facts and representations supporting the Department's decision to grant PTE 92–77, PTE 94–50 and PTE 99–15, refer to the proposed exemptions and the grant notices which are cited above.

Signed at Washington, D.C., this 25th day of May, 2000.

Ivan L. Strasfeld,

Director of Exemption Determinations, Pension and Welfare Benefits Administration, U.S. Department of Labor.

[FR Doc. 00–13643 Filed 5–31–00; 8:45 am]

BILLING CODE 4510–29–P

NATIONAL SCIENCE FOUNDATION

Special Emphasis Panel in Polar Programs: Notice of Meeting

In accordance with the Federal Advisory Committee Act (Pub. L. 92–463, as amended), the National Science Foundation announces the following meeting:

Name and Committee Code: Special Emphasis Panel in Polar Programs (1209).

Date and Time: June 27–29, 2000; 8:30 am–5 pm.

Place: National Science Foundation, 4201 Wilson Blvd., Room 330, Arlington, VA.

Type of Meeting: Closed.

Contact Person: Polly A. Penhale, Program Manager, Antarctic Biology and Medicine, Office of Polar Programs. Rm. 755 S, 4201 Wilson Boulevard, Arlington, VA 22230. Telephone: (703) 306–1033.

Minutes: May be obtained from the contact person listed above.

Purpose of Meeting: To provide advice and recommendations concerning proposals submitted to NSF for financial support.

Agenda: To review and evaluate proposals submitted to Life in Extreme Environments (LExEN) NSF–00–37 as part of the selection process for awards.

Reason for Closing: The proposals being reviewed include information of a proprietary or confidential nature, including technical information; financial data, such as salaries; and personal information concerning individuals associated with the proposals. These matters are exempt under 5 U.S.C. 552b(c), (4) and (6) of the Government in the Sunshine Act.

Dated: May 26, 2000.

Karen J. York,

Committee Management Officer.

[FR Doc. 00–13681 Filed 5–31–00; 8:45 am]

BILLING CODE 7555–01–M

NUCLEAR REGULATORY COMMISSION

[Docket No. 50–336]

Northeast Nuclear Energy Company; Notice of Withdrawal of Application for Amendment to Facility Operating License

The U.S. Nuclear Regulatory Commission (the Commission) has granted the request of Northeast Nuclear Energy Company (the licensee) to withdraw part of its December 14, 1999, application as supplemented February 11, March 30, and April 26, 2000, for proposed amendment to Facility Operating License No. DPR–65 for the Millstone Nuclear Power Station, Unit No. 2, located in Waterford, Connecticut.

By letter dated April 28, 2000, we issued Amendment No. 245 approving the proposed changes with the exception of those changes related to technical specification (TS) Section 3.9.11, ''Refueling Operations—Water Level—Reactor Vessel.'' These proposed changes would have revised the terminology, applicability, surveillance requirements, and the associated action statement for TS Section 3.9.11, ''Refueling Operations—Water Level—Reactor Vessel.''

The Commission had previously issued a Notice of Consideration of Issuance of Amendment published in the **Federal Register** on March 17, 2000 (65 FR 14632). However, by letter dated April 26, 2000, the licensee withdrew a portion of the amendment request.

For further details with respect to this action, see the application for amendment dated December 14, 1999, as supplemented February 11, March 30, and April 26, 2000, and the licensee's letter dated April 26, 2000, which withdrew the portion of the application related to TS Section 3.9.11. The above documents are available for public inspection at the Commission's Public Document Room, the Gelman Building, 2120 L Street, NW., Washington, DC, and accessible electronically through the ADAMS Public Electronic Reading Room link at the NRC Web site (http://www.nrc.gov).

Dated at Rockville, Maryland, this 24th day of May 2000.

For the Nuclear Regulatory Commission.

Jacob I. Zimmerman,

Project Manager, Section 2, Project Directorate I, Division of Licensing Project Management, Office of Nuclear Reactor Regulation.

[FR Doc. 00–13690 Filed 5–31–00; 8:45 am]

BILLING CODE 7590–01–P

SECURITIES AND EXCHANGE COMMISSION

[Investment Company Act Release No. 24474; 812–12008]

Armada Funds, et al.; Notice of Application

May 24, 2000.

AGENCY: Securities and Exchange Commission (''SEC'' or ''Commission'').

ACTION: Notice of an application under section 17(b) of the Investment Company Act of 1940 (''Act'') for an exemption from section 17(a) of the Act.

SUMMARY OF THE APPLICATION: Applicants request an order to permit certain series of Armada Funds (''Armada'') to acquire all of the assets and liabilities of all of the series of The Parkstone Group of Funds (''Parkstone'') (the ''Reorganization''). Because of certain affiliations, applicants may not rely on rule 17a–8 under the Act.

APPLICANTS: Armada, Parkstone, and National City Investment Management Company (''NCIMC'').

FILING DATES: The application was filed on March 1, 2000, and amended on May 23, 2000.

HEARING OR NOTIFICATION OF HEARING: An order granting the application will be issued unless the SEC orders a hearing. Interested persons may request a hearing by writing to the SEC's Secretary and serving applicants with a copy of the request, personally or by mail. Hearing requests should be received by the SEC by 5:30 p.m. on June 15, 2000, and should be accompanied by proof of service on applicants in the form of an affidavit or, for lawyers, a certificate of service. Hearing requests should state the nature of the winter's interest, the reason for the request, and the issues contested. Persons may request notification by writing to the SEC's Secretary.

ADDRESSES: Secretary, SEC, 450 Fifth Street, NW, Washington, DC 20549–0609. Armada, Parkstone, One Freedom Valley Drive, Oaks, Pennsylvania 19456; NCIMC, 1900 East Ninth Street, Cleveland, Ohio 44114.

FOR FURTHER INFORMATION CONTACT: Bruce R. MacNeil, Staff Attorney, (202) 942–0634 (Division of Investment Management, Office of Investment Company Regulation).

SUPPLEMENTARY INFORMATION: The following is a summary of the application. The complete application may be obtained for a fee from the SEC's Public Reference Branch, 450 Fifth Street, NW., Washington, DC 20549–0102 (telephone (202) 942–8090).

Applicants' Representations

1. Parkstone, a Massachusetts business trust, is registered under the Act as an open-end management investment company and is comprised of 16 series (the ''Acquired Funds''). Armada, a Massachusetts business trust, is registered under the Act as an open-end management investment company. Armada is compared of 28 series, 16 of which will participate in the Reorganization. Eleven of these series are currently operating (the ''Operating Acquiring Funds'') and 5 are newly organized shell series (the ''Shell Acquiring Funds,'' and together with the Operating Acquiring Funds, the ''Acquiring Funds''). The Acquiring Funds and the Acquired Funds are collectively referred to as the Funds.'' Applicants state that the investment that the objectives, policies and restrictions of each Acquired Fund and its

corresponding Acquiring Fund are substantially similar.

2. NCIMC is registered under the Investment Advisers Act of 1940 and is the investment adviser for the Acquired Funds and Operating Acquiring Funds and will be the investment adviser for the Shell Acquiring Funds. NCIMC is a wholly-owned subsidiary of National City Corporation (''NCC'').

3. National City Bank, a subsidiary of NCC, and certain of its affiliated companies (''National City Group''), hold of record, in their name and in the names of their nominees, more than 5% (and with respect to certain Funds more than 25%) of the outstanding voting securities of certain of the Funds. All of these securities are held for the benefit of others in a trust, agency, custodial, or other fiduciary or representative capacity, except that certain of the companies of National City Group may, at times, own economic interests in certain money market Funds for their own account.

4. On November 19, 1998, May 11, 1999, July 20–21, 1999 and November 17, 1999, the boards of trustees of Armada and Parkstone (the ''Boards'') including a majority of the trustees who are not ''interested persons,'' as defined in section 2(a)(19) of the Act (''Disinterested Trustees''), approved Plans of Reorganization (each a ''Plan'' and collectively, the ''Plans'') between Armada and Parkstone. Pursuant to the Plans, each Acquiring Fund will acquire all of the assets and liabilities of the corresponding Acquired Fund in exchange for shares of the Acquiring Funds.[1]

5. Armada has four classes of shares: Class A, Class B, Class C and Class I. Class C shares will not be involved in the Reorganization. Parkstone has three classes of shares: Investor A, Investor B, and Institutional. The number of Acquiring Fund shares to be issued to shareholders of the Acquired Fund will be determined by dividing the aggregate net assets of each Acquired Fund class by the net asset value per share of the corresponding Acquiring Fund class, each computed as of the close of business on the closing date (''Closing Date''). Shareholders of Investor A, Investor B, and Institutional shares of the Acquired Funds will receive Class A, Class B, and Class I shares, respectively, of the corresponding Acquiring Fund. The Plans provide that these Acquiring Fund shares will be distributed pro rata to the shareholders of record in the applicable Acquired Fund class, determined as of the close of business on the Closing Date, in complete liquidation of each Acquired Fund. Applicants anticipate that the Closing Date will be on or around June 16, 2000.

6. Applicants state that the investment objectives, policies, and restrictions of each Acquiring Fund are substantially similar to those of its corresponding Acquired Fund. Class A and Investor A shares are subject to a front end sales charge and a rule 12b–1 distribution fee and certain shareholders may be subject to a deferred sales charge. Class B and Investor B shares are subject to a contingent deferred sales charge[2] and a rule 12b–1 distribution fee. Class I and Institutional shares are subject to a rule 12b–1 distribution fee but not a sales charge. No sales charge will be imposed in connection with the Reorganization. For purposes of calculating the deferred sales charge, shareholders of Investor A and Investor B shares of the Acquired Funds will be deemed to have held Class A and Class B shares of the corresponding Acquiring Fund since the date the shareholders initially purchased the shares of the Acquired Fund.

7. The Boards, including a majority of the Disinterested Trustees, found that participation in the Reorganization is in the best interest of each Fund and that the interests of existing shareholders of the Funds will not be diluted as a result of the Reorganization. In approving the Reorganization, the Boards considered, among other things: (a) The potential effect of the Reorganization; (b) the expense ratios of the Acquiring Funds and the Acquired Funds; (c) the compatibility of the investment objectives and investment strategies of the Acquiring Funds and Acquired Funds; (d) the terms and conditions of the Plans; and (e) the tax-free nature of the Reorganization. The Acquiring Funds' Board also considered that Armada and National City Bank will equally bear the expenses associated with the Reorganization, except that Armada will bear any registration fees payable under federal and state law.

8. The Plans may be terminated by mutual written consent of the Acquiring Fund and Acquired Fund at any time prior to the Closing Date. In addition, either party may terminate a Plan in writing without liability to the terminating party if certain conditions are not satisfied prior to the Closing Date.

9. Definitive proxy solicitation materials have been filed with the SEC and were mailed to the Acquired Fund's shareholders on or about March 31, 2000. A special meeting of the Acquired Funds' shareholders was held on May 10, 2000, and the Acquired Funds' shareholders approved the Plans.

10. The consummation of the Reorganization is subject to the following conditions: (a) A registration statement under the Securities Act of 1933 for the Acquiring Funds will have become effective; (b) the Acquired Fund shareholders will have approved the Plans; (c) applicants will have received exemptive relief from the SEC with respect to the issues in the application; (d) the Funds will have received an opinion of counsel concerning the tax-free nature of the Reorganization; and (e) each Acquired Fund that is not reorganizing into a corresponding Shell Acquiring Fund will have declared a dividend to distribute substantially all of its investment company taxable income and net capital gain, if any, to its shareholders. Applicants agree not to make any material changes to the Plans that affect the application without prior SEC staff approval.

Applicants' Legal Analysis

1. Section 17(a) of the Act generally prohibits an affiliated person of a registered investment company, or an affiliated person of that person, acting as principal, from selling any security to, or purchasing any security from, the company. Section 2(a)(3) of the Act defines an ''affiliated person'' of another person to include (a) any person that directly or indirectly owns, controls, or holds with power to vote 5% or more

[1] The Acquired Funds and their corresponding Acquiring Funds are: (1) Parkstone Prime Obligations Fund and Armada Money Market Fund; (2) Parkstone U.S. Government Obligations Fund and Armada Government Money Market Fund; (3) Parkstone Tax-Free Fund and Armada Tax Exempt Money Market Fund; (4) Parkstone Bond Fund and Armada Bond Fund; (5) Parkstone Limited Maturity Bond Fund and Armada Enhanced Income Fund; (6) Parkstone Intermediate Government Obligations Fund and Armada Intermediate Bond Fund; (7) Parkstone Income Fund and Armada Equity Income Fund; (8) Parkstone Small Capitalization Fund and Armada Small Cap Growth Fund; (9) Parkstone International Discovery Fund and Armada International Equity Fund; (10) Parkstone Balanced Allocation Fund and Armada Allocation Fund; (11) Parkstone National Tax Exempt Bond Fund and Armada National Tax Exempt Bond Fund; (12) Parkstone Large Capitalization Fund and Armada Large Cap Ultra Fund; (13) Parkstone U.S. Government Income Fund and Armada U.S. Government Income Fund; (14) Parkstone Mid Capitalization Fund and Armada Mid Cap Growth Fund; (15) Armada Michigan Municipal Bond Fund and Armada Michigan Municipal Bond Fund; and (16) Parkstone Treasury Fund and Armada Treasury Plus Money Market Fund.

[2] Class A and B shares of Armada Money Market Fund, Armada Government Money Market Fund, Armada Tax Exempt Money Market Fund, and Armada Treasury Plus Money Market Fund and Investor A and B shares of Parkstone Prime Obligations Fund, Parkstone U.S. Government Obligations Fund, Parkstone Tax-Free Fund, and Parkstone Treasury Fund are not subject to any sales charge.

of the outstanding voting securities of the other person; (b) any person 5% or more of whose outstanding voting securities are directly or indirectly owned, controlled or held with power to vote by the other person; and (c) any person directly or indirectly controlling, controlled by, or under common control with the other person.

2. Rule 17a–8 under the Act exempts from the prohibitions of section 17(a) mergers, consolidations, or purchases or sales of substantially all of the assets of registered investment companies that are affiliated persons solely by reason of having a common investment adviser, common directors/trustees, and/or common officers, provided that certain conditions set forth in the rule are satisfied.

3. Applicants state that the National City Group holds of record more than 5% (and in some cases more than 25%) of the outstanding voting securities of certain of the Funds. Because of this ownership, applicants state that the Funds may be deemed affiliated persons for reasons other than those set forth in rule 17a–8 and therefore unable to rely on the rule. Applicants request an order pursuant to section 17(b) of the Act exempting them from section 17(a) to the extent necessary to consummate the Reorganization.

4. Section 17(b) of the Act provides that the SEC may exempt a transaction from the provisions of section 17(a) if the evidence establishes that the terms of the proposed transaction, including the consideration to be paid, are reasonable and fair and do not involve overreaching on the part of any person concerned, and that the proposed transaction is consistent with the policy of each registered investment company concerned and with the general purposes of the Act.

5. Applicants submit that the terms of the Reorganization satisfy the standards set forth in section 17(b). Applicants note that the Boards, including a majority of the Disinterested Trustees, found that participation in the Reorganization is in the best interests of each Fund and that the interests of the existing shareholders of each Fund will not be diluted as a result of the Reorganization. Applicants also note that the Reorganization will be based on the Funds' relative net asset values.

For the Commission, by the Division of Investment Management, under delegated authority.

Margaret H. McFarland,

Deputy Secretary.

[FR Doc. 00–13615 Filed 5–31–00; 8:45 am]

BILLING CODE 8010–01–M

SECURITIES AND EXCHANGE COMMISSION

[Release No. 34–42817; File No. SR–OPRA–99–01]

Options Price Reporting Authority; Notice of Filing and Order Granting Accelerated Effectiveness of Amendment to OPRA Plan Adopting a Participation Fee Payable by Each New Party to the Plan

May 24, 2000.

On August 16, 1999, pursuant to Rule 11Aa3–2 under the Securities Exchange Act of 1934 (''Act''),[1] the Options Price Reporting Authority (''OPRA'')[2] submitted to the Securities and Exchange Commission (''Commission'') an amendment to the Plan for Reporting of Consolidated Options Last Sale Reports and Quotation Information (''OPRA Plan''). The proposed amendment would add provisions applicable to a participation fee payable by each new party to the OPRA Plan and codifies procedures applicable to the admission of new parties to the OPRA Plan. Notice of the proposed OPRA Plan amendment was published in the **Federal Register** on October 20, 1999.[3] The Commission received three comment letters on the proposed OPRA Plan amendment.[4] On January 3, 2000, April 28, 2000, and May 18, 2000, OPRA submitted Amendments Nos. 1, 2, and 3, respectively.[5] The Commission is publishing this notice and order to grant accelerated approval to the proposed OPRA Plan amendment, as revised by Amendment No. 3, and to solicit comments from interested persons on Amendment No. 3.

I. Background

Currently, the OPRA Plan provides that any national securities exchange or registered securities association whose rules governing the trading of standardized options have been approved by the Commission may become a party to the OPRA Plan, provided it agrees to conform to the terms and conditions of the OPRA Plan. However, the OPRA Plan does not provide procedures for the application process or for a participation fee to be paid by an exchange at the time it becomes a party to the OPRA Plan.

In response to the application recently received from the International Securities Exchange (''ISE'') to become a party to the OPRA Plan and in anticipation of the receipt of additional applications from other new options exchanges, OPRA's initial filing proposed to incorporate into the OPRA Plan certain application forms and procedures to be used to apply to become a party to the OPRA Plan and to obtain interim access to the OPRA system and to the OPRA Processor for planning and testing purposes. The initial filing also proposed to add to the OPRA Plan provisions for a one-time participation fee payable by each new party to the OPRA Plan.

The Commission received three comment letters on the proposed OPRA Plan amendment.[6] None of the commenters oppose the proposed establishment of an OPRA participation fee. However, the commenters raise concerns regarding the factors OPRA proposed to consider in determining the amount of the participation fee, asserting that the proposed OPRA Plan amendment could create a barrier to entry into the options industry that could harm competition. In response to

[1] 17 CFR 240.11Aa3–2.

[2] OPRA is a National Market System Plan approved by the Commission pursuant to Section 11A of the Act and Rule 11Aa3–2 thereunder. *See* Securities Exchange Act Release No. 17638 (Mar. 18, 1981). The OPRA Plan provides for the collection and dissemination of last sale and quotation information on options that are traded on the member exchanges. The five exchanges which agreed to the OPRA Plan are the American Stock Exchange (''Amex''); the Chicago Board Options Exchange (''CBOE''); the New York Stock Exchange (''NYSE''); the Pacific Exchange (''PCX''); and the Philadelphia Stock Exchange (''Phlx'').

[3] *See* Securities Exchange Act Release No. 42002 (October 13, 1999), 64 FR 56543.

[4] *See* letters from Gerald D. Putnam, Chief Executive Officer, Archipelago, L.L.C., to Jonathan G. Katz, Secretary, Commission, dated November 10, 1999 (''Archipelago Letter''); the United States Department of Justice, to the Commission, dated November 10, 1999 (''Justice Letter''); and Michael J. Simon, Senior Vice President, General Counsel, and Secretary, International Securities Exchange, to Jonathan G. Katz, Secretary, Commission, dated November 17, 1999 (''ISE Letter'').

[5] *See* letters to Deborah L. Flynn, Division of Market Regulation, Commission, from Joseph Corrigan, Executive Director, OPRA, dated December 31, 1999 (''Amendment No. 1'') and April 26, 2000 (''Amendment No. 2''). *See also* letter to John Roeser, Division of Market Regulation, Commission, from Joseph Corrigan, Executive Director, OPRA, dated May 17, 2000 (''Amendment No. 3''). In Amendment No. 1, OPRA responded to the issues raised by commenters, but proposed no changes to its original filing. In Amendment No. 2, OPRA proposed to revise the list of factors to be considered in the determination of a participation fee and to implement the proposed fee structure on a temporary basis to expire at the end of calendar year 2000. In Amendment No. 3, as described below, OPRA proposes to modify its initial filing to incorporate into the OPRA Plan the concept of a participation fee, with the specific standards applicable to the determination of the amount of a participation fee to be added by a future OPRA Plan amendment, subject to Commission approval. OPRA also proposes to make conforming changes to its Application Agreement.

[6] *See* Archipelago Letter, Justice Letter, and ISE Letter, *supra* note 4.

the commenters, OPRA proposes to modify the proposal.[7]

II. Description and Purpose of Amendment No. 3 to the Plan Amendment

The purpose of Amendment No. 3 to the proposed OPRA Plan amendment, as described above, is to further modify that part of the proposed OPRA Plan amendment concerning the participation fee, and to make conforming changes to the Application Agreement filed as part of the original filing. Because the OPRA Plan participants and the Commission have not yet reached agreement on the precise standards to be applied in determining the amount of the participation fee, OPRA proposes, in Amendment No. 3 to the OPRA Plan amendment, to eliminate the proposed factors to be considered in determining the participation fee and the requirement that the fee be paid as a condition to becoming a party to the OPRA Plan.[8] Instead, Amendment No. 3 would incorporate into the OPRA Plan only the concept of a participation fee, with the specific standards applicable to the determination of the amount of the fee to be added by a future OPRA Plan amendment that would be subject to a separate filing and Commission approval. Although any new party to the OPRA Plan would be subject to the new participation fee, the fee would not be payable until after the applicable standards have been approved by the Commission and a specific fee based on those standards has been agreed upon by OPRA and the new participant.

A new exchange would not have a vote on the adoption of the specific standards applicable to the determination of the fee to be paid by that party or on the determination of the amount of the fee based on those standards, although it may participate with the other parties in the discussion of the specific standards to be adopted. As was provided in the proposed OPRA Plan amendment as originally filed, in the event OPRA and the new participant do not agree on the amount of the participation fee, the amount of the fee will be subject to review by the Commission pursuant to Section 11A(b)(5) of the Act.[9]

III. Solicitation of Comments

Interested persons are invited to submit written data, views, and arguments concerning Amendment No. 3 to the proposed OPRA Plan amendment, including whether it is consistent with the Act. Persons making written submissions should file six copies thereof with the Secretary, Securities and Exchange Commission, 450 Fifth Street, NW, Washington, DC 20549–0609. Copies of the submission, all subsequent amendments, and all written statements with respect to Amendment No. 3 to the proposed OPRA Plan amendment that are filed with the Commission, and all written communications relating to the Amendment No. 3 to the proposed OPRA Plan amendment between the Commission and any person, other than those withheld from the public in accordance with the provisions of 5 U.S.C. 552, will be available for inspection and copying in the Commission's Public Reference Room. Copies of the filing also will be available at the principal offices of OPRA. All submissions should refer to file number SR–OPRA–99–01 and should be submitted by June 22, 2000.

IV. Commission's Findings and Order Granting Accelerated Approval of Amendment No. 3 to the Proposed OPRA Plan Amendment

After careful review, the Commission finds that the proposed OPRA Plan amendment as revised by Amendment No. 3, is consistent with the requirements of the Act and the rules and regulations thereunder.[10] Specifically, the Commission believes that Amendment No. 3 to the proposed OPRA Plan amendment is consistent with Rule 11Aa3–2 [11] in that it will contribute to the maintenance of fair and orderly markets and remove impediments to and perfect the mechanisms of a national market system. The Commission notes that any new party to the OPRA Plan would be subject to a participation fee. The fee, however, would not be payable until after specific standards for determining the fee have been approved by the Commission and a specific fee based on those standards has been agreed upon by OPRA and the new participant.

The Commission believes that is reasonable for the OPRA Plan to provide for an initial participation fee to be paid by new parties to the OPRA Plan. Until specific standards can be agreed upon by the OPRA participants and approved by the Commission, however, the Commission believes it is appropriate for new exchanges to be admitted as parties to the OPRA Plan without requiring such new parties to pay a participation fee immediately.

In addition, Amendment No. 3 to the OPRA Plan amendment would allow new parties to the OPRA Plan to participate in discussions regarding the specific standards on which the participation fee is to be based, but would prohibit new parties from voting on the adoption of such standards. The Commission believes that because specific standards would be the subject of a separate filing and published by the Commission for notice and comment, new parties would have a voice, if not a vote, regarding the propriety of such standards. Further, the Commission notes that such standards will ultimately be subject to Commission approval, which will ensure further review of this issue.

The Commission finds good cause to accelerate the approval of Amendment No. 3 to the proposed OPRA Plan amendment prior to the thirtieth day after the date of publication in the **Federal Register**. The Commission notes that Amendment No. 3 to the proposed OPRA Plan amendment is responsive to concerns expressed by commenters and Commission staff regarding the propriety of the proposed factors to be considered in the determination of a participation fee. In addition, approving Amendment No. 3 to the proposed OPRA Plan amendment on an accelerated basis will permit the OPRA Plan to provide for a fee as ISE becomes a party to the OPRA Plan. The Commission believes that approving the amended proposal on an accelerated basis will provide the OPRA Plan participants additional time to develop appropriate standards upon which a participation fee should be based, without unnecessarily delaying ISE's bid to become a party to the OPRA Plan. The Commission finds, therefore, that granting accelerated approval of Amendment No. 3 to the proposed OPRA Plan amendment is consistent with Section 11A of the Act.[12]

V. Conclusion

It is therefore ordered, pursuant to Rule 11Aa3–2 of the Act,[13] that the proposed OPRA Plan amendment, as amended by Amendment No. 3, (SR–OPRA–99–01) is approved on an accelerated basis.

[7] *See* Amendment No. 3, *supra* note 5.

[8] *See* Amendment No. 3, *supra* note 5.

[9] 15 U.S.C. 78k–1(b)(5).

[10] In approving this proposed OPRA Plan amendment, the Commission has considered its impact on efficiency, competition, and capital formation. 15 U.S.C. 78c(f)

[11] 17 CFR 240.11A3–2.

[12] 15 U.S.C. 78k–1.

[13] 17 CFR 240.11Aa3–2.

For the Commission, by the Division of Market Regulation, pursuant to delegated authority.[14]

Margaret H. McFarland,

Deputy Secretary.

[FR Doc. 00–13616 Filed 5–31–00; 8:45 am]

BILLING CODE 8010–01–M

SECURITIES AND EXCHANGE COMMISSION

[Release No. 34–42821; File No. SR–CBOE–00–18]

Self-Regulatory Organizations; Notice of Filing of Proposed Rule Change by the Chicago Board Options Exchange, Inc. To Interpret Rules Relating to Customer Communications

May 24, 2000.

Pursuant to Section 19(b)(1) of the Securities Exchange Act of 1934 (''Act'')[1] and Rule 19b–4 thereunder,[2] notice is hereby given that on April 20, 2000, the Chicago Board Options Exchange, Inc. (''CBOE'' or ''Exchange'') filed with the Securities and Exchange Commission (''Commission'') the proposed rule change as described in Items I, II, and III below, which Items have been prepared by the Exchange. The Commission is publishing this notice to solicit comments on the proposed rule change from interested persons.

I. Self-Regulatory Organization's Statement of the Terms of Substance of the Proposed Rule Change

The CBOE proposes to issue a Regulatory Circular to its membership setting forth a clarifying interpretation to Exchange Rule 9.21, *Communications to Customers,* which governs communications from member firms to customers or members of the public. The text of the proposed rule change is available at the CBOE and at the Commission.

II. Self-Regulatory Organization's Statement of the Purpose of, and Statutory Basis for, the Proposed Rule Change

In its filing with the Commission, the CBOE included statements concerning the purpose of and basis for the proposed rule change and discussed any comments it received on the proposed rule change. The text of these statements may be examined at the places specified in Item IV below. The CBOE has prepared summaries, set forth in Sections A, B, and C below, of the most significant aspects of such statements.

A. Self-Regulatory Organization's Statement of the Purpose of, and Statutory Basis for, the Proposed Rule Change

1. Purpose

Exchange Rule 9.21, *Communications to Customers,* governs communications between Exchange members and their customers and other members of the public. The Exchange, along with the other options exchanges, has published *Guidelines for Options Communications* (''Guidelines'')[3] to explain the customer communications rules of the options exchanges and the interpretations of these rules. The Exchange proposes to issue a Regulatory Circular to formally install a clarifying interpretation that has long been applied by the Exchange. This interpretation deals with the requirement to discuss tax considerations when engaging in certain option strategies. Although the Exchange believes this interpretation to be consistent with and fairly implied by Rule 9.21 and the Guidelines, the Exchange believes that clarification in a Regulatory Circular would be beneficial to its members.

Although Rule 9.21 is silent regarding tax considerations in customer communications, the Guidelines and the Exchange's internal checklist (''Checklist''), which CBOE's Department of Financial and Sales Practice Compliance uses in reviewing communication materials, do require that tax considerations be discussed in communications in certain circumstances. The Guidelines state, ''depending upon the technical or specific nature of such communication, any one or more of the following points should be addressed.'' The Guidelines go on to list various considerations, including the following statement about taxes, ''[s]ince options transactions may involve complex tax considerations, it would misleading to omit the mention of such strategies from any communication that discusses or recommends options strategies.'' In response to comments and recommendations made by the Commission's Office of Compliance Inspections and Examinations, the Exchange in February 1994 added language to its Checklist reflecting the Exchange's long-standing practice in reviewing communications for tax considerations. That practice was, and is, to require a discussion of tax considerations if the communication is educational material or sales literature that is strategy specific and complex.

The Exchange believes that more clarification could be provided to its members regarding this topic and has, therefore, decided to issue an interpretation in a Regulatory Circular clarifying which communications require a mention about tax considerations. The language in the interpretation mimics the language contained in the Exchange's Checklist. The proposed interpretation states that an advisory concerning taxes is required for educational material and sales literature involving specific, detailed and complex option strategies. In addition, the proposed interpretation states an advisory regarding taxes is not necessary where the communication is of a general, noncomplex nature or involves common basic options strategies (*e.g.,* purchasing, covered writing or cash secured put writing). An example of an appropriate advisory concerning taxes, where one is needed, would be, ''[b]ecause of the importance of tax considerations to all option transactions, the investor considering options should consult with his/her tax advisor as to how taxes affect the outcome of contemplated options transactions.''

Again, although the proposed interpretation merely restates the Exchange's long-standing policy in reviewing customer communications for the inclusion of discussions of tax considerations, the Exchange believes that this policy also makes sense from a practical standpoint. The Exchange believes that in common, basic option strategies the tax consequences are straightforward. Therefore, the Exchange believes that the inclusion of a tax advisory in all communications might serve to lessen the impact of the advisory in those cases where the advisory serves a useful purpose.

The Exchange believes that formal clarification of this interpretation of Rule 9.21 is warranted; however, the Exchange also believes that its long-standing interpretation is appropriate and supported by the language of the Guidelines.

2. Statutory Basis

The CBOE believes the proposed Regulatory Circular interpretation of Exchange Rule 9.21 is consistent with and further the objectives of Section 6(b)(5)[4] of the Act in that it is designed to remove impediments to a free and

[14] 17 CFR 200.30–3(a)(29).

[1] 15 U.S.C. 78s(b)(1).

[2] 17 CFR 240.19b–4.

[3] *See* Securities Exchange Act Release No. 29682 (September 13, 1991), 56 FR 47973 (September 23, 1991) (File Nos. SR–Amex–90–38; SR–CBOE–90–27; SR–NASD–91–02; SR–NYSE–90–51; and SR–PSE–90–41).

[4] 15 U.S.C. 78f(b)(5).

open market and to protect investors and the public interest.

B. Self-Regulatory Organization's Statement on Burden on Competition

The CBOE does not believe that the proposed Regulatory Circular interpretation of Exchange Rule 9.21 will impose any burden on competition.

C. Self-Regulatory Organization's Statement on Comments on the Proposed Rule Change Received From Members, Participants, or Others

No written comments were solicited or received with respect to the proposed Regulatory Circular interpretation of Exchange Rule 9.21.

III. Date of Effectiveness of the Proposed Rule Change and Timing for Commission Action

Within 35 days of the date of publication of this notice in the **Federal Register** or within such longer period (i) as the Commission may designate up to 90 days of such date if it finds such longer period to be appropriate and publishes its reasons for so finding or (ii) as to which the self-regulatory organization consents, the Commission will:

(A) By order approve such proposed rule change, or

(B) Institute proceedings to determine whether the proposed rule change should be disapproved.

IV. Solicitation of Comments

Interested persons are invited to submit written data, views, and arguments concerning the foregoing, including whether the proposed rule is consistent with the Act. Persons making written submissions should file six copies thereof with the Secretary, Securities and Exchange Commission, 450 Fifth Street, N.W., Washington, D.C. 20549–0609. Copies of the submission, all subsequent amendments, all written statements with respect to the proposed rule change that are filed with the Commission, and all written communications relating to the proposed rule change between the Commission and any person, other than those that may be withheld from the public in accordance with the provisions of 5 U.S.C. 552, will be available for inspection and copying in the Commission's Public Reference Room. Copies of such filing will also be available for inspection and coping at the principal office of the CBOE. All submissions should refer to File No. SR–CBOE–00–18 and should be submitted by June 22, 2000.

For the Commission, by the Division of Market Regulation, pursuant to delegated authority.[5]

Margaret H. McFarland,

Deputy Secretary.

[FR Doc. 00–13671 Filed 5–31–00; 8:45 am]

BILLING CODE 8010–01–M

[5] 17 CFR 200.30–3(a)(12).

SECURITIES AND EXCHANGE COMMISSION

[Release No. 34–42822; File No. SR–PCX–00–10]

Self-Regulatory Organizations; Notice of Filing and Immediate Effectiveness of Proposed Rule Change by the Pacific Exchange, Inc. Relating to the PCX Application's Mid-Point Price Profile

May 24, 2000.

Pursuant to Section 19(b)(1) of the Securities Exchange Act of 1934 (''Act'')[1] and Rule 19b–4 thereunder,[2] notice is hereby given that on March 26, 2000, the Pacific Exchange, Inc. (''Exchange'' or ''PCX''), filed a proposed rule change with the Securities and Exchange Commission (''SEC'' or ''Commission''). The proposed rule change is described in Items I, II, and III below, which Items have been prepared by the Exchange. The Commission is publishing this notice to solicit comments on the proposed rule change from interested persons.

I. Self-Regulatory Organization's Statement of the Terms of Substance of the Proposed Rule Change

The Exchange is filing a proposed rule change to modify the definition of the term ''Orders'' under Exchange Rule 15.1(f) of its Rules of the Board of Governors, as such term is used for purposes of the PCX Application of the OptiMark System (''PCX Application''), and to add Commentary .04 to Rule 5.3, Rules of the Board of Governors, Equities Trading, Trading Differentials, to provide for separate minimum trading differentials for certain profiles in the PCX Application. The proposed rule change would permit certain PCX Application Profiles to receive an execution under specified circumstances at price increments finer than the minimum trading differential permitted under the Exchange's rules for other transactions on the Exchange. The text of the proposed rule change is available at the Exchange and at the Commission.

[1] 15 U.S.C. 78s(b)(1).

[2] 17 CFR 240.19b–4.

II. Self-Regulatory Organization's Statement of the Purpose of, and Statutory Basis for, the Proposed Rule Change

In its filing with the Commission, the Exchange included statements concerning the purpose of and basis for the proposed rule change and discussed any comments it received on the proposed rule change. The text of these statements may be examined at the places specified in Item IV below. The Exchange has prepared summaries, set forth in sections A, B and C below, of the most significant aspects of such statements.

A. Self-Regulatory Organization's Statement of the Purpose of, and Statutory Basis for, the Proposed Rule Change

1. Purpose

On September 17, 1997, the Commission approved the PCX Application.[3] The PCX Application is a computerized, screen-based trading service for use by Exchange members and their customers to purchase or sell equity securities listed or traded on the Exchange (''PCX Securities''). The PCX Application is a supplement to the Exchange's traditional floor facilities and allows PCX members and their customers to submit expressions of trading interest known as ''Profiles'' anonymously from their computer terminal. As stated in the Approval Order, Profiles do not constitute ''bids'' or ''offers'' within the meaning of Exchange Act Rule 11Ac1–1, the ''Firm Quote Rule.'' Rather, each Profile ''is only a generalized expression of interest with conditions attached and is not eligible for execution until the completion of the Cycle.''[4]

The PCX Application includes several types of Profiles where price can be pegged to reflect changes in a specific market parameter. The midpoint price (''MP'') Profile is a type of pegged Profile. An MP Profile allows a user to enter a Profile to be priced at the midpoint of the national best bid or offer (''NBBO'') posted on the consolidated Quotation System (''CQS'') at the time of a matching cycle of the PCX Application. The MP feature will automatically update the price of any buy or sell Profile designated by the user of the PCX Application to conform to the midpoint of the NBBO displayed on CQS. All Profiles, other than the CQS

[3] *See* Securities Exchange Act Release No. 39086 (September 17, 1997), 62 FR 50036 (September 24, 1997) (SR–PCX–97–18)(''Approval Order''). The PCX Application has been in operation on the Exchange since January 1999.

[4] *Id.* at 50046.

Profiles and those Profiles created from the PCX Specialist's book, are eligible to be designated as an MP Profile.

The tracking of the relevant CQS information for MP Profiles occurs on a real-time basis in a dynamic fashion, such that the price of each designated MP Profile, irrespective of the NBBO when it was entered, is based on most current available NBBO. For example, if the matching cycle of the PCX Application (known as a ''Call'') for a particular PCX Security is scheduled to take place at 11:30 a.m. Eastern time, the price of each MP Profile will be updated to reflect the midpoint between the consolidated best bid and offer prices immediately prior to commencement of the Call at 11:30. From a functional standpoint, it would be as if the user of the PCX Application had entered a Profile at that instant with the associated price equal to the midpoint of the NBBO. Accordingly, all MP Profiles receive a new entry time at the beginning of each matching cycle in which they are included.[5] Of course, all Profiles received by the OptiMark System, whether or not designated as MP, will be centrally processed based on a computer algorithm. As specified in Exchange Rule 15.3(c), eligible coordinates from such buy and sell Profiles will be matched based on the stated principles of priority, and Profiles so matched will result in orders capable of immediate execution.[6]

The Exchange proposes to modify its rules so that an MP Profile can be executed at a trading differential finer than permitted under Exchange rules. Currently, the Exchange's minimum price variation is 1/16 (''teenie''). Over the course of the first year of operation of the PCX Application, OptiMark and the Exchange have become aware of a limitation affecting MP Profiles when the NBBO in a matching cycle is an odd teenie or a single teenie. As described above, an MP Profile should be priced at the midpoint of the NBBO. For an even teenie spread of 1/8 or greater, the midpoint can be determined precisely (*e.g.,* the midpoint of an NBBO of $20–$20 1/8 is $20 1/16). Midpoint pricing is more difficult for an odd teenie spread because the true midpoint can only be expressed in one thirty seconds. For example, the midpoint of an NBBO of $20–$20 3/16 is $20 3/32. Because the Exchange's minimum trading differential is 1/16, a true midpoint cannot be achieved. Thus, OptiMark would effect a match between buy and sell MP Profiles at either $20 1/8 or $20 1/16, depending upon whether the buy or sell Profile had time priority. A similar problem arises when the NBBO is 1/16 because the true midpoint can only be expressed in one thirty seconds (*e.g.,* an NBBO of $20–$20 1/16). In this situation, OptiMark will not effect a match of MP Profiles.

Institutional customers of OptiMark have asked the Exchange to revise the midpoint pricing feature so that a real midpoint trade can take place in odd teenie markets and 1/16 markets.[7] To achieve this, the Exchange proposes to allow executions of MP Profiles to take place in the PCX Applications at finer trading differentials than 1/16. Thus, the Exchange proposes to amend its Rules to allow an MP Profile to be executed at a price increment as small as 1/64 or, upon conversion to decimal pricing, to one half of the minimum price variation.[8]

Exchange Rule 5.3(b) provides the Exchange with the authority to determine the trading increments for equity securities traded on the Exchange by filing a proposed rule change with the Commission pursuant to Section 19(b)(3)(A) of the Act.[9] The PCX believes that a trading differential of 1/64 is appropriate for MP Profiles so that a true midpoint trade can be effected in the PCX Application. The PCX notes that several other exchanges operate auxiliary matching systems that price in finer increments than available in regular trading.[10] The Exchange believes that a finer trading differential for executions of MP Profiles will facilitate enhanced Profile interaction at prices consistent with the continued movement in the industry to reduce the minimum trading increment. This is a value-added service that has been requested by many customers and supported by PCX members in discussions with PCX staff and OptiMark personnel.

The Exchange notes that all transactions resulting from midpoint pricing will be identified with a special sale condition so that members, public investors and others can distinguish such trades from other trade reports executed on the Exchange.[11] It is important to note that these new finer price increments apply only to executed trades and not to the entry of Profiles or to publish bids and offers. In other words, trades resulting from the MP service may be executed on the basis of 1/64 increments; however, it will still not be possible to enter Profiles, bids, or offers in 1/64 increments.

2. Statutory Basis

The Exchange believes that the proposal is consistent with the provisions of Section 6(b)(5) of the Act[12] in that the PCX Application is a facility that is designed to promote just and equitable principles of trade and to protect investors and the public interest, and is not designed to permit unfair discrimination between customers, issuers, or dealers. In addition, the Exchange believes that the proposed rule change is consistent with provisions of Section 11A(a)(1)(B) of the Act,[13] which states that new data processing and communications techniques create the opportunity for more efficient and effective market operations.

B. Self-Regulatory Organization's Statement on Burden on Competition

The Exchange does not believe that the proposed rule change will impose any burden on competition that is not necessary or appropriate in furtherance of the purposes of the Act.

[5] The Exchange has represented that Optimark will make information on the operation of the MP Profile available to users of the PCX Application.

[6] All MP Profiles in a matching cycle on the same side of the market are prioritized according to time of entry of the Profile into the PCX Application. After a cycle, all unexecuted MP Profiles that are not cancelled are automatically entered into the next matching cycle at the beginning of the cycle.

[7] Customers that use indexation strategies or are passive investors are particularly interested in using the midpoint pricing feature.

[8] Under Exchange Rule 5.3(b), most PCX Securities trade in minimum increments of 1/16 of a dollar. In 1998, the Commission approved the Exchange's proposal to permit trading on the Exchange Floor at increments of 1/32 or 1/64 in order to match bids and offers displayed by other markets for the purpose of preventing Intermarket Trading System trade-throughs. *See* Securities Exchange Act Release No. 40199 (July 14, 1998), 63 FR 39366 (July 22, 1998) (SR–PCX–97–46).

[9] 15 U.S.C. 78s(b)(3)(A).

[10] For example, the Philadelphia Stock Exchange (''Phlx'') operates a VWAP matching system which report trades in fractions rounded to the nearest 1/256. See Securities Exchange Act Release No. 41210 (March 24, 1999), 64 FR 15847 (April 1, 1999) (SR–PHLX–96–14). The Commission also approved a modified trading variation for the Chicago Match System. *See* Securities Exchange Act Release No. 35030 (November 30, 1994), 59 FR 63141 (December 7, 1994).

[11] The Exchange confirmed with the Securities Industry Automation Corporation (''SIAC'') that it is feasible to report through the Consolidated Trade System (''CTS'') any transactions resulting from midpoint pricing in price increments as small as 1/64 of a dollar, and that such transactions will be reported to CTS with the sale condition ''B'' to indicate midpoint pricing. Telephone conversation between Brian P. Faughnan, Managing Director, MDS/NMS Planning and CTS/CQS Development, SIAC, and David DiCenso, Director, Equity Operations, PCX on March 21, 2000.

[12] 15 U.S.C. 78f(b)(5).

[13] 15 U.S.C. 78k–1(a)(1)(B).

C. Self-Regulatory Organization's Statement on Comments on the Proposed Rule Change Received From Members, Participants, or Others

The Exchange has neither solicited nor received written comments on the proposed rule change.

III. Date of Effectiveness of the Proposed Rule Change and Timing for Commission Action

The foregoing rule change constitutes a stated policy, practice or interpretation of Exchange Rule 5.3(b) and therefore, has become immediately effective pursuant to Section 19(b)(3)(A) of the Act [14] and subparagraph (f)(1) of Rule 19b–4 thereunder.[15] The Commission further notes that Commentary .01 of the Exchange's rules states that the Exchange may change the trading differentials for securities traded on the Exchange by filing a proposed rule change with the Commission pursuant to Section 19(b)(3)(A) of the Act.[16] This proposed rule change would change the trading differentials for the PCX Application, which constitutes trading on the Exchange. The language changes to Rule 5.3(b) and Rule 15 merely effectuate this change in trading differentials for Profile sin the PCX Application.

At any time within 60 days of the filing of a rule change pursuant to Section 19(b)(3)(A) of the Act, the Commission may summarily abrogate the rule change if it appears to the Commission that such action is necessary or appropriate in the public interest, for the protection of investors, or otherwise in furtherance of the purposes of the Act.

IV. Solicitation of Comments

Interested persons are invited to submit written data, views and arguments concerning the foregoing, including whether the proposed rule change is consistent with the Act. Persons making written submissions should file six copies thereof with the Secretary, Securities and Exchange Commission, 450 Fifth Street, N.W., Washington, D.C. 20549–0609. Copies of the submission, all subsequent amendments, all written statements with respect to the proposed rule change that are filed with the Commission, and all written communications relating to the proposed rule change between the Commission and any person, other than those that may be withheld from the public in accordance with the provisions of 5 U.S.C. 552, will be available for inspection and copying in the Commission's Public Reference Room. Copies of such filing will also be available for inspection and copying at the principal office of the Exchange. All submissions should refer to File No. SR–PCX–00–10 and should be submitted by June 22, 2000.[17]

For the Commission, by the Division of Market Regulation, pursuant to delegated authority.

Margaret H. McFarland,

Deputy Secretary

[FR Doc. 00–13673 Filed 5–31–00; 8:45 am]

BILLING CODE 8010–01–M

[14] 15 U.S.C. 78s(b)(3)(A).

[15] 17 CFR 240.19b–4(f)(1).

[16] *See* Securities Exchange Act Release No. 38780 (June 26, 1997), 62 FR 36087 (July 3, 1997)(SR–PCX–97–15).

[17] 17 CFR 200.30–3(a)(12).

SECURITIES AND EXCHANGE COMMISSION

[Release No. 34–42814; File No. SR–Phlx–00–11]

Self-Regulatory Organizations; Notice of Filing and Immediate Effectiveness of Proposed Rule Change by the Philadelphia Stock Exchange, Inc. To Reduce the Value of Its Computer Box Maker Index Option (''BMX'')

May 23, 2000.

Pursuant to Section 19(b)(1) of the Securities Exchange Act of 1934 (''Act''),[1] Rule 19b–4 thereunder,[2] notice is hereby given that on March 31, 2000, the Philadelphia Stock Exchange, Inc. (''Phlx'' or ''Exchange'') filed with the Securities and Exchange Commission (''SEC'' or ''Commission'') the proposed rule change as described in Items I, II, and III below, which Items have been prepared by the Exchange. The proposed rule change has been filed by the Phlx as a ''non-controversial'' rule change under Rule 19b-4(f)(6) under the Act.[3] The Commission is publishing this notice to solicit comments on the proposed rule change from interested persons.

I. Self-Regulatory Organization's Statement of the Terms of Substance of the Proposed Rule Change

The Exchange proposes to reduce the value of its Computer Box Maker Index (''Index'') option (''BMX'') to one-half its present value by doubling the base market divisor used to calculate the index. Additionally, the Exchange proposes to double the position and exercise limits applicable to BMX until the last expiration then trading. The index is a price weighted, narrow-based, A.M. settled index comprised of nine stocks issued by companies that manufacture, market, and support desktop and notebook personal computers and fault tolerant systems.[4]

II. Self-Regulatory Organization's Statement of the Purpose of, and Statutory Basis for, the Proposed Rule Change

In its filing with the Commission, the Phlx included statements concerning the purpose of and basis for the proposed rule change and discussed any comments it received on the proposed rule change. The text of these statements may be examined at the places specified in Item IV below. The Phlx has prepared summaries, set forth in Sections A, B, and C below, of the most significant aspects of such statements.

A. Self-Regulatory Organization's Statement of the Purpose of, and Statutory Basis for, the Proposed Rule Change

1. Purpose

The purpose of this proposed rule change is to attract additional liquidity to BMX. The Exchange began trading BMX in 1998.[5] On March 31, 2000, the index value was 451.24 and the near-month in-the-money call premium was $35.125 per contract. The Exchange proposes to conduct a ''two-for-one split'' of the index, to reduce the value of index to one-half its current value. The split would double the number of BMX contracts so that for each BMX contract held at the time of the split, a contract holder would receive two contracts at the reduced value, with a strike price one-half of the original strike price.[6] Additionally, the Exchange proposes to double the position and exercise limits applicable to BMX, from 25,0000 contracts to 50,000 contracts, until the last expiration then trading. The Exchange represents that the proposed changes would result in an index value of 225.50 and a near-month in-the-money call premium of $17.56.[7]

[1] 15 U.S.C. 78s(b)(1).

[2] 17 CFR 240.19b–4.

[3] 17 CFR 240.19b–4(f)(6).

[4] The index is comprised of the following stocks (primary markets in parentheses): Apple Computer, Inc. (Nasdaq); Compaq Corp. (NYSE); Dell Computer Corp. (Nasdaq); Gateway 2000, Inc. (NYSE); Hewlitt Packard Co. (NYSE); International Business Machines (NYSE); Micron Technology, Inc. (NYSE); Sun Microsystems, Inc. (Nasdaq); and Unisys Corp. (NYSE).

[5] *See* Securities Exchange Act Release No. 39895 (April 21, 1998), 63 FR 23327 (April 28, 1998).

[6] For instance, the holder of a BMX 800 call will receive two BMX 400 calls.

[7] The Exchange represents that this procedure is similar to the type used for equity options, where the underlying security is subject to a two-for-one stock split.

In conjunction with the split, the Exchange will list strike prices surrounding the new, lower index value, pursuant to Phlx Rule 1101A. The trading symbol will remain as BMX. The Exchange will announce the effective date, the strike price, and the position limit changes by way of an Exchange memorandum to the membership.

The Exchange is proposing this rule change to attract additional liquidity to BMX. The Phlx believes a two-for-one split will reduce the value of the index and will have a positive effect on overall transaction volumes by making the option premiums more attractive for retail investors. Additionally, the Exchange believes that a reduced index value will encourage additional investor interest because investors will be able to utilize this trading vehicle with a smaller amount of capital. The Exchange believes that attracting additional investors will create a more active and liquid trading environment.

2. Statutory Basis

For these reasons, the Exchange believes that the proposed rule change is consistent with Section 6 of the Act,[8] in general, and in particular, with Section 6(b)(5),[9] in that it is designed to promote just and equitable principles of trade, as well as to protect investors and the public interest, by establishing a lower index value, which should, in turn, facilitate trading in BMX options. The Exchange believes that reducing the value of the index should not raise manipulation concerns or adversely impact the market, because the Exchange will continue to employ its surveillance procedures and has proposed an orderly procedure to achieve the index split, including adequate notice of the split to market participants.

B. Self-Regulatory Organization's Statement on Burden on Competition

The Exchange does not believe that the proposed rule change will impose any burden on competition not necessary or appropriate in furtherance of the purposes of the Act.

C. Self-Regulatory Organization's Statement on Comments on the Proposed Rule Change Received From Members, Participants, or Others

The Exchange neither solicited nor received written comments with respect to the proposed rule change.

[8] 15 U.S.C. 78f.

[9] 15 U.S.C. 78f(b)(5).

III. Date of Effectiveness of the Proposed Rule Change and Timing for Commission Action

This proposed rule change has been filed by the Exchange as a ''non-controversial'' rule change pursuant to Section 19(b)(3)(A) of the Act[10] and subparagraph (f)(6) of Rule 19b–4 thereunder.[11] Because the foregoing proposed rule change: (1) Does not significantly affect the protection of investors or the public interest, (2) does not impose any significant burden on competition, and (3) by its terms does not become operative for 30 days after the date of filing, or such shorter time as the Commission may designate,[12] it has become effective pursuant to Section 19(b)(3)(A) of the Act[13] and Rule 19b–4(f)(6) thereunder.[14]

The Exchange has requested that the Commission accelerate the operative date of the rule change to permit the Exchange to implement it immediately. The Commission has determined, consistent with the protection of investors and the public interest, to make the proposed rule change operative upon filing, pursuant to Section 19(b)(3)(A) of the Act and Rule 19b–4(f)(6)(iii).[15] Under Rule 19b–4(f)(6)(iii), a proposed ''non-controversial'' rule change does not become operative for 30 days after the date of filing, unless the Commission designates a shorter time.[16] The Commission believes that it is consistent with the protection of investors and the public interest to make the proposed rule change operative upon filing because reducing the value of the Index should enable more investors to participate in the market, thereby promoting liquidity in the market place.[17] At any time within 60 days of the filing of the proposed rule change, the Commission may summarily abrogate such rule change if it appears to the Commission that such action is necessary or appropriate in the public interest, for the protection of investors, or otherwise in furtherance of the purposes of the Act.

[10] 78s(b)(3)(A).

[11] 17 CFR 240.19b–4(f)(6).

[12] The Exchange provided the Commission with the five business day notice required by Rule 19b–4(f)(6) of the Act on March 3, 2000.

[13] 15 U.S.C. 78s(b)(3)(A).

[14] 17 CFR 240.19b–4(f)(6).

[15] 17 CFR 240.19b–4(f)(6)(iii)

[16] *Id.*

[17] For purposes only of accelerating the operative date of this proposal, the Commission has considered the proposed rule's impact on efficiency, competition, and capital formation. 15 U.S.C. 78c(f).

IV. Solicitation of Comments

Interested persons are invited to submit written data, views, and arguments concerning the foregoing, including whether the proposed rule change is consistent with the Act. Persons making written submissions should file six copies thereof with the Secretary, Securities and Exchange Commission, 450 Fifth Street, NW., Washington DC 20549–0609. Copies of the submission, all subsequent amendments, all written statements with respect to the proposed rule change that are filed with the Commission, and all written communications relating to the proposed rule change between the Commission and any person, other than those that may be withheld from the public in accordance with the provisions of 5 U.S.C. 552, will be available for inspection and copying in the Commission's Public Reference Room. Copies of such filing also will be available for inspection and copying at the principal office of the Phlx. All submissions should refer to File No. SR–Phlx–00–11 and should be submitted by June 22, 2000.

For the Commission, by the Division of Market Regulation, pursuant to delegated authority.[18]

Margaret H. McFarland,

Deputy Secretary.

[FR Doc. 00–13672 Filed 5–31–00; 8:45 am]

BILLING CODE 8010–01–M

SMALL BUSINESS ADMINISTRATION

[License No. 01/01–0285]

Capital Resource Company of Connecticut; Notice of Surrender of License

Notice is hereby given that Capital Resource Company of Connecticut (''CRC''), Two Bridgewater Road, Farmington, Connecticut 06032–2256, has surrendered its license to operate as a small business investment company under the Small Business Investment Act of 1958, as amended (the ''Act''). CRC was licensed by the U.S. Small Business Administration on March 23, 1977.

Under the authority vested by the Act and pursuant to the regulations promulgated thereunder, the surrender of the license was accepted on April 5, 2000, and accordingly, all rights, privileges, and franchises derived therefrom have been terminated.

[18] 17 CFR 200.30–3(a)(12).

(Catalog of Federal Domestic Assistance Program No. 59.011, Small Business Investment Companies)

Dated: May 23, 2000.

Don A. Christensen,

Associate Administrator for Investment.

[FR Doc. 00–13600 Filed 5–31–00; 8:45 am]

BILLING CODE 8025–01–P

SOCIAL SECURITY ADMINISTRATION

Agency Information Collection Activities: Proposed Request and Comment Request

In compliance with Public Law 104–13, the Paperwork Reduction Act of 1995, SSA is providing notice of its information collections that require submission to the Office of Management and Budget (OMB). SSA is soliciting comments on the accuracy of the agency's burden estimate; the need for the information; its practical utility; ways to enhance its quality, utility and clarity; and on ways to minimize burden on respondents, including the use of automated collection techniques or other forms of information technology.

I. The information collections listed below will be submitted to OMB within 60 days from the date of this notice. Therefore, comments and recommendations regarding the information collections would be most useful if received by the Agency within 60 days from the date of this publication. Comments should be directed to the SSA Reports Clearance Officer at the address listed at the end of this publication. You can obtain a copy of the collection instruments by calling the SSA Reports Clearance Officer on (410) 965–4145, or by writing to him at the address listed at the end of this publication.

1. *Request for Withdrawal of Application—0960–0015.* Form SSA–521 is completed by the Social Security Administration (SSA) when an individual wishes to withdraw his or her application for Social Security benefits. The respondents are individuals who wish to withdraw their applications for benefits.

Number of Respondents: 100,000.

Frequency of Response: 1.

Average Burden Per Response: 5 minutes.

Estimated Annual Burden: 8,333 hours.

2. *Statement of Self-Employment Income—0960–0046.* SSA uses the information on Form SSA–766 to expedite the payment of Social Security Benefits to an individual who is self-employed and who is establishing insured status in the current year. The respondents are self-employed persons.

Number of Respondents: 5,000.

Frequency of Response: 1.

Average Burden Per Response: 5 minutes.

Estimated Annual Burden: 417 hours.

3. *Certification by Religious Group—0960–0093.* The data that SSA collects via form SSA–1458 will be used to determine if the religious group meets the qualifications set out in section 1402(g) of the Internal Revenue Code permitting its members to be exempt from payment of certain Social Security taxes. The respondents are spokespersons for a religious group or sect.

Number of Respondents: 180.

Frequency of Response: 1.

Average Burden Per Response: 15 minutes.

Estimated Annual Burden: 45 hours.

4. *You Can Make Your Payment by Credit Card—0960–0462.* Forms SSA–4588 and SSA–4589 provide information to SSA on the debtor's name, Social Security Number, credit card number, the amount being paid and the credit card type so that a remittance can be credited to the debtor's account. The respondents are Title II (Old-Age, Survivors and Disbility Insurance) and Title XVI (Supplemental Security Income) debtors; and citizens requesting material through SSA.

Number of Respondents: 19,000.

Frequency of Response: 1.

Average Burden Per Response: 5 minutes.

Estimated Annual Burden: 1,583 hours.

5. *Statement Regarding Contributions—0960–0020.* To determine eligibility of child applicants to Social Security benefits, SSA must collect information about the source of support and the amount of contributions. SSA uses the form SSA–783 for this purpose. The respondents are individuals who provide information to SSA about the child's sources of support.

Number of Respondents: 30,000.

Frequency of Response: 1.

Average Burden Per Response: 15 minutes.

Estimated Annual Burden: 7,500 hours.

II. The information collections listed below have been submitted to OMB for clearance. Written comments and recommendations on the information collections would be most useful if received within 30 days from the date of this publication. Comments should be directed to the SSA Reports Clearance Officer and the OMB Desk Officer at the addresses listed at the end of this publication. You can obtain a copy of the OMB clearance packages by calling the SSA Reports Clearance Officer on (410) 965–4145, or by writing to him.

Statement of Claimant or Other Person—0960–0045. In special situations when there is no standard form or questionnaire, Form SSA–795 is used by SSA to obtain information from claimants or other persons having knowledge of facts in connection with claims for Social Security or Supplementary Supplemental Security Income. The information collected is used to process claims for benefits. The respondents are applicants for SocialSecurity or Supplemental Security Income benefits.

Number of Respondents: 305,500.

Frequency of Response: 1.

Average Burden Per Response: 15 minutes.

Estimated Annual Burden: 76,375 hours.

(SSA Address) Social Security Administration, DCFAM, Attn: Frederick W. Brickenkamp, 6401 Security Blvd., Baltimore, MD 21235

(OMB Address) Office of Management and Budget, OIRA, Attn: Desk Officer for SSA, New Executive Office Building, Room 10230, 725 17th St., NW, Washington, DC 20503

Dated: May 25, 2000.

Frederick W. Brickenkamp,

Reports Clearance Officer, Social Security Administration.

[FR Doc. 00–13608 Filed 5–31–00; 8:45 am]

BILLING CODE 4191–02–P

TENNESSEE VALLEY AUTHORITY

Routine Maintenance of Electric Generating Stations

AGENCY: Tennessee Valley Authority (TVA).

ACTION: Notice of availability.

SUMMARY: TVA is announcing the availability of a technical report, Routine Maintenance of Electric Generating Stations (February 2000). This report describes common practices on the TVA electric power system and elsewhere in the electric utility industry that are necessary to maintain the efficiency, reliability, and availability of steam electric generating units.

ADDRESSES: A copy of this report may be obtained by contacting Jerry L. Golden at (423) 751–6779; email address: jlgolden@tva.gov. TVA is currently planning on posting this report on TVA's website www.tva.gov.

FOR FURTHER INFORMATION CONTACT: Jerry L. Golden, Manager Production Technology, at (423) 751–6779.

SUPPLEMENTARY INFORMATION:

Background

Under section 14 of the TVA Act, 16 U.S.C. 831m, TVA is directed to collect data and report on practices, methods, facilities, and equipment and the economic integration of plants and systems ''best suited to promote the public interest, efficiency, and the wider and more economical use of electric energy.'' In accordance with this directive and authority, TVA reported on its generating unit maintenance practices and experiences in a report entitled, TVA's Power Plant Maintenance Program, Philosophy and Experience, T. H. Gladney and H. S. Fox (April 1972). Today, TVA is announcing the availability of an updated report on utility maintenance practices, Routine Maintenance of Electric Generating Stations, Jerry L. Golden (February 2000).

Congress has tasked TVA with the development and conservation of the resources of the Tennessee Valley region in order to foster the region's economic and social well-being. One component of TVA's regional resource development program is the generation, transmission, and sale of electric power. TVA's electric power system now serves approximately 8 million people in parts of seven southeastern states.

TVA has more than 65 years of experience in maintaining various kinds of power-generating technologies. These technologies include hydro-electric units, nuclear units, combustion turbines, a pumped storage facility, and 11 coal-fired power plants. TVA's coal-fired power plants consist of 59 units with a diverse mix of burner types and configurations. The size of units currently being operated ranges from 125 megawatts to 1,300 megawatts (nameplate capacities). These boiler types and sizes are typical for more than 90 percent of the coal-fired boiler fleet in the United States. TVA's February 2000 technical report describes common utility maintenance practices and philosophies and provides case studies of a number of maintenance projects on the TVA system and elsewhere.

Other Information and Report Summary

A steam-electricity generating unit is a complicated machine consisting of thousands of separate parts and components that must be operated together in an integrated fashion to produce electricity. Like any complex mechanical system, a electricity-generating unit may suffer impaired performance caused by defects in design or manufacture, extreme operating conditions, normal wear of components, or catastrophic failure. This impaired mechanical performance affects the economic performance of the unit and employee safety. To ensure reliable integration of the thousands of different parts and continued reliable performance, TVA and other electric power systems must have an active generating unit maintenance program.

Maintaining integrated operation of all components is difficult because of the large number of components and the varying stresses on components. Failure of a component can affect unit operating efficiencies and can even prevent the unit from operating at all. This is true regardless of the size of the component. A critical electric relay, sensing device, or valve can shut a unit down as easily as the failure of a unit component such as an economizer or a reheater.

The maintenance, repair, and replacement of unit components are necessary to achieve reliable and safe operation of a generating unit throughout its useful life. To do this, TVA and other electric utilities routinely conduct maintenance activities that are proactive, reactive, and predictive. Proactive maintenance practices try to forestall component failure and degradation. This includes such things as lubricating equipment, replacement of fluids, and the regular replacement of gaskets. Reactive maintenance practices correct a component failure or degradation when it occurs. Such reactive maintenance can be limited to specific component elements, include surrounding or adjacent elements that may have suffered the same stress, or involve the replacement of an entire component. Predictive maintenance takes advantage of the most recent advancements in assessment and measurement technologies. Through predictive maintenance practices, TVA and other utilities try to predict when a component element or entire component may fail or suffer unacceptable degradation. Utilities then replace elements and components in advance of actual failure so that damage to other components is reduced and generating units are not suddenly lost.

It has been routine practice within TVA and the utility industry for decades to replace components and systems with state-of-the-art equipment and materials to ensure that the most reliable and efficient equipment is used rather than original equipment or components that may not only be obsolete but no longer even available on the market. TVA's 1972 maintenance report described the routine use of improved materials and designs, and this practice continues throughout the industry today.

TVA's 2000 maintenance report provides case studies of four typical utility maintenance practices: replacement of cyclones, reheaters, economizers and forced draft fan systems. Based on a review of data from the TVA and other coal-fired utility systems, TVA found that replacement of cyclones occurred as early as 10 years after initial operation of a unit to as late as 37 years after initial operation. Reheaters were replaced from 5 to 44 years after initial operation. Economizers were replaced from 6 to 55 years after initial operation. The conversion of forced draft fan systems to balanced draft systems has occurred at units from 4 to 36 years after initial operation.

TVA concludes that components are routinely replaced throughout the lives of units and can occur very early after initial operation of a unit. The many factors that influence equipment or component replacement include design or fabrication errors, unanticipated operating conditions, operational errors, and technology advancements.

Dated: May 19, 2000.

Joseph R. Bynum,

Executive Vice President, Fossil Power Group.

[FR Doc. 00–13680 Filed 5–31–00; 8:45 am]

BILLING CODE 8120–08–U

DEPARTMENT OF TRANSPORTATION

Federal Highway Administration

Major Investment Study/Scoping Process and Environmental Impact Statement: Butler, Hamilton, Miami, Montgomery, and Warren Counties, Ohio and Kenton County, KY

AGENCY: Federal Highway Administration (FHWA), DOT in conjunction with Federal Transit Administration (FTA), DOT.

ACTION: Notice of intent.

SUMMARY: The FHWA is issuing this notice to advise the public that the I–75 Corridor Major Investment Study (MIS) will serve as the formal scoping process for the preparation of one or more environmental documents—environmental assessment(s) (EA) and/or environmental impact statement(s) (EIS)—which may be prepared for proposed transportation improvements in one or more of the listed counties in Ohio and Kentucky as detailed above.

FOR FURTHER INFORMATION CONTACT: Mark L. Vonder Embse, Urban Programs

Engineer, Federal Highway Administration, 200 North High Street, Room 328, Columbus, Ohio 43215, Telephone: (614) 280–6854.

SUPPLEMENTARY INFORMATION: The FHWA, in cooperation with the Ohio Department of Transportation (ODOT), the Kentucky Transportation Cabinet (KYTC), the Ohio-Kentucky-Indiana Regional Council of Governments (OKI), and the Miami Valley Regional Planning Commission (MVRPC), are conducting an MIS. The study will focus on the primary north/south transportation corridor through the Cincinnati and Dayton urban areas, bounded by Boone County south of the Ohio River to the City of Piqua 85 miles north of the Ohio River. The outcome of the I–75 Corridor MIS will be to identify various regional transportation strategies for improving the safety and efficiency of the existing transportation system operating mainly along I–75 and adjacent roadways from south of Cincinnati to north of Dayton, Ohio. The I–75 Corridor MIS will analyze a wide range of potential transportation improvements including: (1) Take no action; (2) Transportation System Management (TSM)/ Transportation Demand Management (TDM) strategies to improve the existing system and minimize existing/future travel demand with minimal new construction; (3) construct various highway improvements (*e.g.*, additional capacity (lanes), new ramps or interchanges on new or existing alignment(s)); (4) freight rail improvements; and (5) transit improvements.

Letters describing the MIS process and soliciting comments and participation in the study will be sent to appropriate Federal, State, regional and local agencies, and to private organizations and citizens who have previously expressed or are known to have interest in this project. A wide range of public involvement activities, including a series of public meetings and forums, will be held in the study and beginning with a formal public scoping meeting.

To ensure that the full range of issues related to this proposed action(s) are addressed and all significant issues identified, comments and suggests are invited from all interested parties. Comments or questions concerning this MIS, the scoping process or the range of proposed future action(s), including the preparation of any environmental document(s) should be directed to the FHWA at the address provided above.

(Catalog of Federal Domestic Assistance Program Number 20.205, Highway Planning and Construction. The regulations implementing Executive Order 12372 regarding intergovernmental consultation on Federal programs and activities apply to this program)

Issued on: May 23, 2000.

Mark L. Vonder Embse,

Urban Programs Engineer, Federal Highway Administration, Columbus, Ohio.

[FR Doc. 00–13679 Filed 5–31–00; 8:45 am]

BILLING CODE 4910–22–P

DEPARTMENT OF TRANSPORTATION

Federal Highway Administration

Intelligent Transportation Society of America; Public Meeting

AGENCY: Federal Highway Administration (FHWA), US DOT.

ACTION: Notice of public meeting.

SUMMARY: The Intelligent Transportation Society of America (ITS AMERICA) will hold a meeting of its Coordinating Council meeting on Sunday, July 16, 2000. The following designations are made for each item: (A) is an ''action'' item; (I) is an ''information item;'' and (D) is a ''discussion'' item. The agenda includes the following: (1) Call to Order and Introductions (I); (2) Statements of Introductions (I); (3) Antitrust Statement (I); (4) Approval of Previous Minutes (A); (5) Federal Report (I/D); (6) President's Report (I); (7) Federal Communications Commission Advice on Dedicated Short Range Communication at 5.9GHz (A); (8) New Regional Institutions—What is the ITS America Role? (I/D); (9) Workshop Orientation (I/D); (10) Committee Reports (I); (11) Future Coordinating Council Meeting Dates (I/D); (12) Adjournment.

DATES: The Coordinating Council of ITS AMERICA will meet on Sunday, July 16, 2000, from 2 p.m.–5 p.m. (Eastern Standard time).

ADDRESSES: Radisson Hotel—Berkley Marina, 200 Marina Boulevard, Berkley, CA 94710 Phone: (510) 548–7920; Fax: (510) 548–7944.

FOR FURTHER INFORMATION CONTACT: Materials associated with this meeting may be examined at the offices of ITS AMERICA, 400 Virginia Avenue, SW., Suite 800, Washington, D.C. 20024. Persons needing further information or to request to speak at this meeting should contact Larry Schulman at ITS AMERICA by telephone at (202) 484–4847, or by Fax at (202) 484–3483.

The DOT contact is Kristy Frizzell, FHWA, HOIT, Washington, D.C. 20590, (202) 366–9536. Office hours are from 8:30 a.m. to 5 p.m., e.t., Monday through Friday, except for legal holidays.

(23 U.S.C. 315; 49 CFR 1.48)

Issued on: Wednesday, May 24, 2000.

Jeffrey Paniati,

Deputy Director, ITS Joint Program Office.

[FR Doc. 00–13698 Filed 5–31–00; 8:45 am]

BILLING CODE 4910–22–P

DEPARTMENT OF THE TREASURY

Submission for OMB Review; Comment Request

May 22, 2000.

The Department of Treasury has submitted the following public information collection requirement(s) to OMB for review and clearance under the Paperwork Reduction Act of 1995, Public Law 104–13. Copies of the submission(s) may be obtained by calling the Treasury Bureau Clearance Officer listed. Comments regarding this information collection should be addressed to the OMB reviewer listed and to the Treasury Department Clearance Officer, Department of the Treasury, Room 2110, 1425 New York Avenue, NW., Washington, DC 20220.

DATES: Written comments should be received on or before July 3, 2000, to be assured of consideration.

Financial Management Service (FMS)

OMB Number: 1510–0033.

Form Number: POD Form 1672.

Type of Review: Extension.

Title: Application of Undertaker for Payment of Funeral Expenses From Funds to the Credit of a Deceased Depositor.

Description: This form is used by the undertaker to apply for payment of a postal savings account of a deceased depositor to apply for funeral expenses. This form is supported by a certificate from a relative (POD 1690) and an itemized funeral bill. Payment is made to the funeral home.

Respondents: Individual or households.

Estimated Number of Respondents: 15.

Estimated Burden Hours Per Respondent: 30 minutes.

Frequency of Response: On occasion.

Estimated Total Reporting Burden: 8 hours.

Clearance Officer: Juanita Holder, Financial Management Service, 3700 East West Highway, Room 144, PGP II, Hyattsville, MD 20782.

OMB Reviewer: Alexander T. Hunt, (202) 395–7860, Office of Management and Budget, Room 10202, New

Executive Office Building, Washington, DC 20503.

Lois K. Holland,

Departmental Reports Management Officer.

[FR Doc. 00–13686 Filed 5–31–00; 8:45 am]

BILLING CODE 4810–35–U

DEPARTMENT OF THE TREASURY

Submission for OMB Review; Comment Request

May 23, 2000.

The Department of Treasury has submitted the following public information collection requirement(s) to OMB for review and clearance under the Paperwork Reduction Act of 1995, Public Law 104–13. Copies of the submission(s) may be obtained by calling the Treasury Bureau Clearance Officer listed. Comments regarding this information collection should be addressed to the OMB reviewer listed and to the Treasury Department Clearance Officer, Department of the Treasury, Room 2110, 1425 New York Avenue, NW., Washington, DC 20220.

DATES: Written comments should be received on or before July 3, 2000, to be assured of consideration.

Internal Revenue Service (IRS)

OMB Number: 1545–1060.

Form Number: IRS Form 8288–B.

Type of Review: Extension.

Title: Application for Withholding Certificate for Dispositions by Foreign Persons of U.S. Real Property Interest.

Description: Form 8288–B is used to apply for a withholding certificate from IRS to reduce or eliminate the withholding required by section 145.

Respondents: Business or other for-profit, Individual or households.

Estimated Number of Respondents/Recordkeepers: 5,079.

Estimated Burden Hours Per Respondent/Recordkeeper:

Recordkeeping	2 hr., 4 min.
Learning about the law or the form.	2 hr., 2 min.
Preparing the form	1 hr., 1 min.
Copying, assembling, and sending the form to the IRS.	20 min.

Frequency of Response: On occasion.

Estimated Total Reporting/Recordkeeping Burden: 27,782 hours.

Clearance Officer: Garrick Shear, Internal Revenue Service, Room 5244, 1111 Constitution Avenue, NW., Washington, DC 20224.

OMB Reviewer: Alexander T. Hunt, (202) 395–7860, Office of Management and Budget, Room 10202, New Executive Office Building, Washington, DC 20503.

Lois K. Holland,

Departmental Reports Management Officer.

[FR Doc. 00–13687 Filed 5–31–00; 8:45 am]

BILLING CODE 4830–01–U

DEPARTMENT OF THE TREASURY

Submission for OMB Review; Comment Request

May 25, 2000.

The Department of Treasury has submitted the following public information collection requirement(s) to OMB for review and clearance under the Paperwork Reduction Act of 1995, Public Law 104–13. Copies of the submission(s) may be obtained by calling the Treasury Bureau Clearance Officer listed. Comments regarding this information collection should be addressed to the OMB reviewer listed and to the Treasury Department Clearance Officer, Department of the Treasury, Room 2110, 1425 New York Avenue, NW., Washington, DC 20220.

DATES: Written comments should be received on or before July 3, 2000, to be assured of consideration.

Internal Revenue Service (IRS)

OMB Number: 1545–0184.

Form Number: IRS Form 4797.

Type of Review: Extension.

Title: Sales of Business Property.

Description: Form 4797 is used by taxpayers to report sales, exchanges, or involuntary conversions of assets, other than capital assets and involuntary conversions of capital assets held more than one year. It is also used to compute ordinary income from recapture and the recapture of prior year section 1231 losses.

Respondents: Individual or households, Business or other for-profit.

Estimated Number of Respondents/Recordkeepers: 1,396,388.

Estimated Burden Hours Per Respondent/Recordkeeper:

Recordkeeping	33 hr., 14 min.
Learning about the law or the form.	7 hr., 39 min.
Preparing the form	8 hr., 3 min.

Frequency of Response: Annually.

Estimated Total Reporting/Recordkeeping Burden: 69,009,495 hours.

OMB Number: 1545–1008.

Form Number: IRS Form 8582.

Type of Review: Revision.

Title: Passive Activity Loss Limitations.

Description: Under Internal Revenue Code section 469, losses from passive activities, to the extent that they exceed income from passive activities, cannot be deducted against nonpassive income. Form 8582 is used to figure the passive activity loss allowed and the loss to be reported on the tax return.

Respondents: Business or other for-profit, Individuals or households, Farms.

Estimated Number of Respondents/Recordkeepers: 3,622,282.

Estimated Burden Hours Per Respondent/Recordkeeper:

Recordkeeping	1 hr., 5 min.
Learning about the law or the form.	1 hr., 43 min.
Preparing the form	1 hr., 31 min.
Copying, assembling, and sending the form to the IRS.	20 min.

Frequency of Response: Annually.

Estimated Total Reporting/Recordkeeping Burden: 17,254,834 hours.

OMB Number: 1545–1065.

Form Number: IRS Form 9003.

Type of Review: Extension .

Title: Additional Questions to be Completed by All Applicants for Permanent Residence in the United States.

Description: Form 9003 is used by the State Department and the Immigration and Naturalization Service to gather certain additional information from ''green card'' applicants for the IRS as required by section 6039E of the Internal Revenue Code of 1986. The answers are transcribed into a database for IRS computer processing.

Respondents: Individuals or households.

Estimated Number of Respondents: 933,000.

Estimated Burden Hours Per Respondent: 5 minutes.

Frequency of Response: Other (When applying for green card).

Estimated Total Reporting Burden: 77,750 hours.

Clearance Officer: Garrick Shear, Internal Revenue Service, Room 5244, 1111 Constitution Avenue, NW., Washington, DC 20224.

OMB Reviewer: Alexander T. Hunt, (202) 395–7860, Office of Management and Budget, Room 10202, New Executive Office Building, Washington, DC 20503.

Lois K. Holland,

Departmental Reports Management Officer.

[FR Doc. 00–13688 Filed 5–31–00; 8:45 am]

BILLING CODE 4830–01–U

DEPARTMENT OF THE TREASURY

Office of Thrift Supervision

Proposed Agency Information Collection Activities; Comment Request

ACTION: Notice and request for comments.

SUMMARY: The Department of the Treasury, as part of its continuing effort to reduce paperwork and respondent burden, invites the general public and other Federal agencies to comment on proposed and continuing information collections, as required by the Paperwork Reduction Act of 1995, Public Law 104–13. Today, the Office of Thrift Supervision within the Department of the Treasury solicits comments on the Activities of S&L Holding Companies.

DATES: Submit written comments on or before July 31, 2000.

ADDRESSES: Send comments to Manager, Dissemination Branch, Information Management and Services Division, Office of Thrift Supervision, 1700 G Street, NW, Washington, DC 20552, Attention 1550–0063. Hand deliver comments to the Guard's Desk, East Lobby Entrance, 1700 G Street, NW, from 9 a.m. to 4 p.m. on business days. Send facsimile transmissions to FAX Number (202) 906–7755 or (202) 906–6956 (if comments are over 25 pages). Send e-mails to ''public.info@ots.treas.gov'', and include your name and telephone number. Interested persons may inspect comments at the Public Reference Room, 1700 G St. N.W., from 10 a.m. until 4 p.m. on Tuesdays and Thursdays.

FOR FURTHER INFORMATION CONTACT: Nadine Washington, Supervision, Office of Thrift Supervision, 1700 G Street, NW, Washington, DC 20552, (202) 906–6706.

SUPPLEMENTARY INFORMATION:

Title: Activities of S&L Holding Companies.

OMB Number: 1550–0063.

Form Number: OTS Form 1564.

Abstract: Title 12 CFR Section 584.2–1 requires prior notification to the OTS by savings and loan holding companies proposing to engage in prescribed services and activities. The OTS uses this information to track activities and decide the advisability of other actions.

Current Actions: OTS proposes to renew this information collection without revision.

Type of Review: Renewal.

Affected Public: Business or For Profit.

Estimated Number of Respondents: 2.

Estimated Time Per Respondent: 2 hours.

Estimated Total Annual Burden Hours: 4 hours.

Request for Comments

The OTS will summarize comments submitted in response to this notice or will include these comments in its request for OMB approval. All comments will become a matter of public record. The OTS invites comment on: (a) Whether the collection of information is necessary for the proper performance of the functions of the agency, including whether the information shall have practical utility; (b) the accuracy of the agency's estimate of the burden of the collection of information; (c) ways to enhance the quality; (d) ways to minimize the burden of the collection of information on respondents, including the use of automated collection techniques or other forms of information technology; and (e) estimates of capital or starting costs and costs of operation, maintenance, and purchase of services to provide information.

Dated: May 23, 2000.

John E. Werner,

Director, Information & Management Services Division.

[FR Doc. 00–13617 Filed 5–31–00; 8:45 am]

BILLING CODE 6720–01–P

DEPARTMENT OF THE TREASURY

Office of Thrift Supervision

Proposed Agency Information Collection Activities; Comment Request

ACTION: Notice and request for comments.

SUMMARY: The Department of the Treasury, as part of its continuing effort to reduce paperwork and respondent burden, invites the general public and other Federal agencies to comment on proposed and continuing information collections, as required by the Paperwork Reduction Act of 1995, Public Law 104–13. Today, the Office of Thrift Supervision within the Department of the Treasury solicits comments on Operating Subsidiaries.

DATES: Submit written comments on or before July 31, 2000.

ADDRESSES: Send comments to Manager, Dissemination Branch, Information Management and Services Division, Office of Thrift Supervision, 1700 G Street, NW., Washington, DC 20552, Attention 1550-0077. Hand deliver comments to the Guard's Desk, East Lobby Entrance, 1700 G Street, NW, from 9:00 a.m. to 4:00 p.m. on business days. Send facsimile transmissions to FAX Number (202) 906–7755; or (202) 906–6956 (if comments are over 25 pages). Send e-mails to ''public.info@ots.treas.gov'', and include your name and telephone number. Interested persons may inspect comments at the Public Reference Room, 1700 G St. N.W., from 10 a.m. until 4 p.m. on Tuesdays and Thursdays.

FOR FURTHER INFORMATION CONTACT: Nadine Washington, Supervision, Office of Thrift Supervision, 1700 G Street, NW., Washington, DC 20552, (202) 906–6706.

SUPPLEMENTARY INFORMATION:

Title: Operating Subsidiaries.

OMB Number: 1550–0077.

Form Number: OTS Form 1579.

Abstract: Title 12 CFR part 559 requires a savings association proposing to establish or acquire an operating subsidiary or conduct new activities in an existing operating subsidiary to either notify the OTS or obtain the prior approval of the OTS. The regulation also requires a savings association to create and maintain certain documents.

Current Actions: OTS proposes to renew this information collection without revision.

Type of Review: Renewal.

Affected Public: Business or For Profit.

Estimated Number of Respondents: 139.

Estimated Time Per Respondent: 10 hours.

Estimated Total Annual Burden Hours: 1,139 hours.

Request for Comments

The OTS will summarize comments submitted in response to this notice or will include these comments in its request for OMB approval. All comments will become a matter of public record. The OTS invites comment on: (a) Whether the collection of information is necessary for the proper performance of the functions of the agency, including whether the information shall have practical utility; (b) the accuracy of the agency's estimate of the burden of the collection of information; (c) ways to enhance the quality; (d) ways to minimize the burden of the collection of information on respondents, including the use of automated collection techniques or other forms of information technology; and (e) estimates of capital or starting costs and costs of operation, maintenance, and purchase of services to provide information.

Dated: May 23, 2000.

John E. Werner,

Director, Information & Management Services Division.

[FR Doc. 00–13618 Filed 5–31–00; 8:45 am]

BILLING CODE 6720–01–P

DEPARTMENT OF VETERANS AFFAIRS

[OMB Control No. 2900–0262]

Proposed Information Collection Activity: Proposed Collection; Comment Request

AGENCY: Veterans Benefits Administration, Department of Veterans Affairs.

ACTION: Notice.

SUMMARY: The Veterans Benefits Administration (VBA), Department of Veterans Affairs (VA), is announcing an opportunity for public comment on the proposed collection of certain information by the agency. Under the Paperwork Reduction Act (PRA) of 1995, Federal agencies are required to publish notice in the **Federal Register** concerning each proposed collection of information, including each proposed extension of a currently approved collection, and allow 60 days for public comment in response to the notice. This notice solicits comments for information needed to identify persons authorized to certify reports on behalf of an educational institution or job training establishment.

DATES: Written comments and recommendations on the proposed collection of information should be received on or before July 31, 2000.

ADDRESSES: Submit written comments on the collection of information to Nancy J. Kessinger, Veterans Benefits Administration (20S52), Department of Veterans Affairs, 810 Vermont Avenue, NW, Washington, DC 20420. Please refer to ''OMB Control No. 2900–0262'' in any correspondence.

FOR FURTHER INFORMATION CONTACT: Nancy J. Kessinger at (202) 273–7079 or FAX (202) 275–5947.

SUPPLEMENTARY INFORMATION: Under the PRA of 1995 (Public Law 104–13; 44 U.S.C., 3501–3520), Federal agencies must obtain approval from the Office of Management and Budget (OMB) for each collection of information they conduct or sponsor. This request for comment is being made pursuant to Section 3506(c)(2)(A) of the PRA.

With respect to the following collection of information, VBA invites comments on: (1) whether the proposed collection of information is necessary for the proper performance of VBA's functions, including whether the information will have practical utility; (2) the accuracy of VBA's estimate of the burden of the proposed collection of information; (3) ways to enhance the quality, utility, and clarity of the information to be collected; and (4) ways to minimize the burden of the collection of information on respondents, including through the use of automated collection techniques or the use of other forms of information technology.

Title: Designation of Certifying Official(s), VA Form 22–8794.

OMB Control Number: 2900–0262.

Type of Review: Extension of a currently approved collection.

Abstract: The law requires specific certifications from an educational institution or job training establishment that provides approved training for veterans and other eligible persons. VA Form 22–8794 serves as the report from the school or job training establishment as to those persons authorized to submit these certifications. The information is used to ensure that educational benefits are not made improperly based on a report from someone other than a designated certifying official.

Affected Public: Business or other for-profit, Not for-profit institutions, and State, Local or Tribal Government.

Estimated Annual Burden: 417 hours.

Estimated Average Burden Per Respondent: 10 minutes.

Frequency of Response: On occasion.

Estimated Number of Respondents: 2,500.

Dated: April 28, 2000.

By direction of the Secretary.

Sandra McIntyre,

Management Analyst, Information Management Service.

[FR Doc. 00–13735 Filed 5–31–00; 8:45 am]

BILLING CODE 8320–01–P

DEPARTMENT OF VETERANS AFFAIRS

[OMB Control No. 2900–0079]

Agency Information Collection Activities Under OMB Review

AGENCY: Veterans Benefits Administration, Department of Veterans Affairs.

ACTION: Notice.

SUMMARY: In compliance with the Paperwork Reduction Act (PRA) of 1995 (44 U.S.C., 3501 *et seq.*), this notice announces that the Veterans Benefits Administration (VBA), Department of Veterans Affairs, has submitted the collection of information abstracted below to the Office of Management and Budget (OMB) for review and comment. The PRA submission describes the nature of the information collection and its expected cost and burden; it includes the actual data collection instrument.

DATES: Comments must be submitted on or before July 3, 2000.

FOR FURTHER INFORMATION OR A COPY OF THE SUBMISSION CONTACT: Denise McLamb, Information Management Service (045A4), Department of Veterans Affairs, 810 Vermont Avenue, NW, Washington, DC 20420, (202) 273–8030 or FAX (202) 273–5981. Please refer to ''OMB Control No. 2900–0079.''

SUPPLEMENTARY INFORMATION:

Title: Employment Questionnaire, VA Forms 21–4140, 21–4140–1 and 21–4140a.

OMB Control Number: 2900–0079.

Type of Review: Reinstatement, without change, of a previously approved collection for which approval has expired.

Abstract: 38 CFR 4.16 permits VA to pay 100 percent disability compensation benefits to a veteran based on unemployability where, otherwise, the schedular rating is less than 100 percent. VA Forms 21–4140, 21–4140a and 21–4140–1 are used to gather information to determine continued entitlement to benefits based on unemployment.

An agency may not conduct or sponsor, and a person is not required to respond to a collection of information unless it displays a currently valid OMB control number. The **Federal Register** Notice with a 60-day comment period soliciting comments on this collection of information was published on October 21, 1999 at pages 56839–56840.

Affected Public: Individuals or households.

Estimated Annual Burden: 3,790 hours.

Estimated Average Burden Per Respondent: 5 minutes.

Frequency of Response: On occasion.

Estimated Number of Respondents: 45,480.

Send comments and recommendations concerning any aspect of the information collection to VA's OMB Desk Officer, Allison Eydt, OMB Human Resources and Housing Branch, New Executive Office Building, Room 10235, Washington, DC 20503 (202) 395–4650. Please refer to ''OMB Control No. 2900–0079'' in any correspondence.

Dated: April 27, 2000.

By direction of the Secretary.

Sandra McIntyre,

Management Analyst, Information Management Service.

[FR Doc. 00–13736 Filed 5–31–00; 8:45 am]

BILLING CODE 8320–01–P

Federal Register

Thursday,
June 1, 2000

Part II

Department of the Treasury

Office of the Comptroller of the Currency
Office of Thrift Supervision

Federal Reserve System

Federal Deposit Insurance Corporation

12 CFR Parts 40, 216, 332, and 573
Privacy of Consumer Financial Information; Final Rule

DEPARTMENT OF THE TREASURY

Office of the Comptroller of the Currency

12 CFR Part 40

[Docket No. 00–10]

RIN 1557–AB77

FEDERAL RESERVE SYSTEM

12 CFR Part 216

[Docket No. R–1058]

FEDERAL DEPOSIT INSURANCE CORPORATION

12 CFR Part 332

RIN 3064–AC32

DEPARTMENT OF THE TREASURY

Office of Thrift Supervision

12 CFR Part 573

[Docket No. 2000–45]

RIN 1550–AB36

Privacy of Consumer Financial Information

AGENCIES: Office of the Comptroller of the Currency (OCC), Treasury; Board of Governors of the Federal Reserve System (Board); Federal Deposit Insurance Corporation (FDIC); and Office of Thrift Supervision (OTS), Treasury.

ACTION: Joint final rule.

SUMMARY: The Office of the Comptroller of the Currency, Board of Governors of the Federal Reserve System, Federal Deposit Insurance Corporation, and the Office of Thrift Supervision, (collectively, the Agencies) are publishing final privacy rules pursuant to section 504 of the Gramm-Leach-Bliley Act (the GLB Act or Act). Section 504 authorizes the Agencies to issue regulations as may be necessary to implement notice requirements and restrictions on a financial institution's ability to disclose nonpublic personal information about consumers to nonaffiliated third parties. Pursuant to section 503 of the GLB Act, a financial institution must provide its customers with a notice of its privacy policies and practices. Section 502 prohibits a financial institution from disclosing nonpublic personal information about a consumer to nonaffiliated third parties unless the institution satisfies various notice and opt-out requirements and the consumer has not elected to opt out of the disclosure. These final rules implement the requirements outlined above.

EFFECTIVE DATE: This joint rule is effective November 13, 2000. However, compliance will be optional until July 1, 2001.

FOR FURTHER INFORMATION CONTACT:

OCC: Amy Friend, Assistant Chief Counsel, (202) 874–5200; Jeffery Abrahamson, Attorney, Legislative and Regulatory Activities Division, (202) 874–5090, or Mark Tenhundfeld, Assistant Director, Legislative and Regulatory Activities Division, (202) 874–5090; Michael Bylsma, Director, Community and Consumer Law, (202) 874–5750; Steve Van Meter, Senior Attorney, Community and Consumer Law, (202) 874–5750; Karen Furst, Policy Analyst, Economic and Policy Analysis, (202) 874–4509; Paul Utterback, National Bank Examiner, Bank Supervision Policy, (202) 874–5461, Office of the Comptroller of the Currency, 250 E Street, SW., Washington, DC 20219.

Board: Oliver I. Ireland, Associate General Counsel, (202) 452–3625, Stephanie Martin, Managing Senior Counsel, (202) 452–3198, or Thomas Scanlon, Attorney, (202) 452–3594, Legal Division; or Adrienne D. Hurt, Assistant Director, (202) 452–2412, Jane J. Gell, Managing Counsel, (202) 452–3667, James H. Mann, Attorney, (202) 452–2412, or Minh-Duc T. Le, Attorney, (202) 452–3667, Division of Consumer and Community Affairs. For the hearing impaired only, contact Janice Simms, Telecommunications Device for the Deaf (TDD) (202) 872–4984, Board of Governors of the Federal Reserve System, 20th and C Streets, NW., Washington, DC 20551.

FDIC: James K. Baebel, Senior Review Examiner, Division of Compliance and Consumer Affairs, (202) 736–0229; Deanna Caldwell, Community Affairs Officer, Division of Compliance and Consumer Affairs, (202) 736–0141; Robert A. Patrick, Counsel, Regulations and Legislation Section, (202) 898–3757; Marc J. Goldstrom, Counsel, Regulations and Legislation Section, (202) 898–8807; Marilyn E. Anderson, Senior Counsel, Regulations and Legislation Section, (202) 898–3522; Nancy Schucker Recchia, Counsel, Regulations and Legislation Section, (202) 898–8885, Federal Deposit Insurance Corporation, 550 17th Street, NW., Washington, DC 20429.

OTS: Christine Harrington, Counsel (Banking and Finance), (202) 906–7957, or Paul Robin, Assistant Chief Counsel, (202) 906–6648, Regulations and Legislation Division; or Cindy Baltierra, Program Analyst, Compliance Policy, (202) 906–6540, Office of Thrift Supervision, 1700 G Street, NW., Washington DC 20552.

SUPPLEMENTARY INFORMATION: The contents of this preamble are listed in the following outline:

I. Background
II. Overview of Comments Received
III. Section-by-Section Analysis
IV. Guidance for Certain Institutions
V. Regulatory Analysis
A. Paperwork Reduction Act
B. Regulatory Flexibility Act
C. Executive Order 12866
D. Unfunded Mandates Act of 1995

I. Background

On November 12, 1999, President Clinton signed the GLB Act (Pub. L. 106–102) into law. Subtitle A of title V of the Act, captioned Disclosure of Nonpublic Personal Information (codified at 15 U.S.C. 6801 *et seq.*), limits the instances in which a financial institution may disclose nonpublic personal information about a consumer to nonaffiliated third parties, and requires a financial institution to disclose to all of its customers the institution's privacy policies and practices with respect to information sharing with both affiliates and nonaffiliated third parties. Title V also requires the Agencies, the Secretary of the Treasury, the National Credit Union Administration (NCUA), the Federal Trade Commission (FTC), and the Securities and Exchange Commission (SEC), after consulting with representatives of State insurance authorities designated by the National Association of Insurance Commissioners, to prescribe such regulations as may be necessary to carry out the purposes of the provisions in title V that govern disclosure of nonpublic personal information.

The Agencies have prepared final rules to implement subtitle A that are consistent and comparable to the extent possible, as is required by the statute.[1] The texts of the Agencies' proposed regulations are substantively identical, and differ only with respect to the citations of authority for each Agency's rulemaking and definitions appropriate for institutions within each Agency's primary jurisdiction.

II. Overview of Comments Received

On February 22, 2000, the Agencies published a joint notice of proposed rulemaking (the proposal or proposed rule) in the **Federal Register** (65 FR

[1] The NCUA, FTC, SEC, and the Treasury Department also have participated in the rulemaking process, and the NCUA, FTC, and SEC will separately issue comparable final rules.

8770).[2] The Agencies collectively received a total of 8,126 comments in response to the proposal, although many commenters sent copies of the same letter to each of the Agencies.[3] Of these, several thousand were received from individuals, virtually all of whom encouraged the Agencies to provide greater protection of individuals' financial privacy. Many individuals noted their concerns generally about the loss of privacy and the receipt of unwanted solicitations by marketers. A large number of individuals also requested the Agencies to support legislation that the commenters believe would provide additional protections.

Several letters were received from members of Congress. In two letters signed by several members of the House of Representatives, the Agencies were encouraged to exercise their rulemaking authority to provide more protections than were proposed. Other Congressmen requested, in separate letters, that the Agencies (a) create an exception under limited circumstances to the prohibition against the sharing of account numbers for marketing purposes, (b) ensure that social security numbers are considered ''nonpublic personal information,'' and (c) refrain from extending the effective date of the rule.

The National Association of Insurance Commissioners (NAIC) submitted a comment on behalf of the State insurance authorities that generally supported the Agencies' proposed rule. The NAIC also proposed various measures to provide certain protections for consumers, such as specifying means to exercise the right to opt out of the disclosure of information. The NAIC further advised the Agencies to clarify the boundary of Federal and State jurisdiction over privacy regulations and ensure that the financial privacy rules under the Act are compatible with the privacy rules relating to medical information that are to be issued by the Secretary of the Department of Health and Human Services (HHS) under the Health Insurance Portability and Accountability Act (HIPPA) of 1996.[4]

Other comments were received from consumer groups and others advocating that the Agencies extend privacy protections in a number of ways, such as by requiring (a) financial institutions to provide consumers with access to their information maintained by the institutions and the opportunity to correct errors, (b) more detailed disclosures of the information collected and disclosed, and (c) disclosures of a financial institution's privacy policies and practices earlier in the process of establishing a customer relationship. In a letter signed by 33 State Attorneys General, the Agencies were requested to add certain consumer protections to the disclosure requirements and to the provision permitting financial institutions to enter into joint marketing agreements.

The majority of the remainder of comments received by the Agencies were from insured depository institutions or their representatives. These commenters offered a large number of suggested changes, with the most commonly advanced suggestions including: an extension of the effective date of the rule; an amendment to the definition of ''nonpublic personal information'' to focus more clearly on ''financial'' information; a streamlining of information required in the initial and annual disclosures; a clarification of how one or more of the statutory exceptions operate; an exclusion from, or clarification of, the definitions of ''consumer'' and ''customer'' in various contexts; and the addition of flexibility to provide initial notices at some point other than ''prior to'' the time a customer relationship is established.

Representatives of a wide variety of other interests, including the health care industry, retail merchants, insurance companies, securities firms, private investigators, and higher education, also suggested changes to the proposed rule.

The Agencies have modified the proposed rule in light of the comments received. These comments, and the Agencies' responses thereto, are discussed in the following section-by-section analysis. As was done in the preamble discussion of the proposal, the citations are to sections only, leaving citations to the part numbers used by each Agency blank. Following the section-by-section analysis, the Agencies have provided guidance for certain institutions that is intended to provide additional guidance on how these institutions may comply with the rule in a way that avoids unnecessary burden.

III. Section-by-Section Analysis

As an initial matter, the Agencies note that the final rule, unlike the proposal, presents the various sections in subparts that consist of related sections. This change was made to group related concepts together and thereby make the rule easier to follow. A derivation table is included following this preamble to assist readers in locating provisions as set out in the proposal. The Agencies also have added an Appendix A to the final rule, setting out sample disclosures for financial institutions to consider.

Section __.1 Purpose and Scope

Proposed § __.1 identified the purposes and scope of the rules. As stated in the proposal, the rule is intended to require a financial institution to provide notice to customers about its privacy policies and practices; to describe the conditions under which a financial institution may disclose nonpublic personal information about consumers to nonaffiliated third parties; and to provide a method for consumers to prevent a financial institution from disclosing that information to certain nonaffiliated third parties by ''opting out'' of that disclosure, subject to various exceptions as stated in the rule. The Agencies invited comment on whether the rules should apply to foreign financial institutions that solicit business in the United States but that do not have an office in the United States.

Most of the comments received on this section focused on the scope of the rules. Several commenters suggested that the Agencies clarify how the rule applies to insurance companies. The Agencies note that section 505 of GLB Act, which sets out the enforcement authority of the Agencies, extends this authority to subsidiaries of entities within each Agency's primary jurisdiction. That section then explicitly excludes ''persons providing insurance'' from each Agency's enforcement authority (and, by operation of section 504(a)(1) of GLB Act, from the Agencies' rulemaking authority). The Agencies affected by this provision have concluded that the exclusion of ''persons providing insurance'' is not intended to remove insurance activities conducted directly by an insured depository institution from the scope of the rule. Consistent with this reading of the statute, each Agency's final rule states that the exclusion of persons providing insurance applies only to persons doing so in a subsidiary of an entity within the primary jurisdiction of that Agency. *See* § 40.1(b) (OCC rule); § 216.3(q) (Board rule); § 332.3(q) (FDIC rule); and § 573.1(b) (OTS rule). The OTS notes that, while it regulates savings and loan holding companies, a different Federal functional regulator, a state insurance authority, or the FTC may enforce privacy rules as to that holding company, under § 505 of the

[2] The NCUA, FTC, and SEC published separate proposed rules on different dates. These proposed rules, which were consistent and comparable with the proposals published by the Agencies, appeared in the **Federal Register** at 65 FR 10988 (March 1, 2000) (NCUA), 65 FR 11174 (March 1, 2000) (FTC), and 65 FR 12354 (March 8, 2000) (SEC).

[3] The NCUA, FTC, and SEC received 99, 640, and 112 comments, respectively, in response to their proposed rules.

[4] These proposed regulations were published for comment at 64 FR 59918 (Nov. 3, 1999).

Act, depending on the nature of a savings and loan holding company's activities.

Several other commenters asked that the final rule state that certain transactions that are exempt from the coverage of the Truth in Lending Act (TILA; 15 U.S.C. 1601 *et seq.*) and Regulation Z (Reg. Z, 12 CFR part 226) also be treated as beyond the scope of the privacy rule. TILA and Reg. Z, which impose disclosure requirements on credit extended to consumers under certain circumstances, exempt several transactions, including those involving business, commercial, or agricultural credit. 15 U.S.C. 1603(1); 12 CFR 226.3(a). The Agencies agree that transactions that fit within the exemptions from TILA and Reg. Z for these types of credit also would fall outside the scope of the privacy rule, and have amended § __.1(b) accordingly. Thus, financial institutions may look at how this exemption is applied under Reg. Z for guidance on the scope of covered transactions under the privacy rule. It should be noted, however, that TILA exempts several other types of transactions that would be covered under the privacy rule if they are for the purpose of an individual obtaining a financial product or service as that term is defined in the privacy regulation. *See* 15 U.S.C. 1603(2) and (3).

A few commenters stated that the rule should apply to foreign entities who solicit business from people in the United States. The OCC, FRB, and FDIC each have been given explicit authority to enforce the privacy rule with respect to foreign institutions within their respective jurisdictions that have offices in the U.S. Those commenters who favored applying the regulation to foreign offices of financial institutions that do not have offices within the U.S. suggested that an expanded scope would provide additional protections to consumers and would eliminate what they perceive to be a competitive disadvantage of domestic institutions. While the Agencies support consistent protections for consumers regardless of the entity from whom a financial product or service is obtained, at this stage the Agencies do not believe that it is appropriate to attempt to apply the rule to offshore offices of financial institutions.

Several comments suggested that the rule should not apply to entities that must comply with regulations issued by HHS that implement HIPAA. Given the broad definition of ''financial institution'' under the GLB Act, certain entities, such as health insurers, are subject to these privacy rules as well as rules promulgated under HIPAA regarding the appropriate handling of protected health information. Accordingly, financial institutions may be covered both by this privacy rule and by the regulations promulgated by HHS under the authority of sections 262 and 264 of HIPAA once those regulations are finalized. Based on the proposed HIPAA rules, it appears likely that there will be areas of overlap between the HIPAA and financial privacy rules. For instance, under the proposed HIPAA regulations, consumers must provide affirmative authorization before a covered institution may disclose medical information in certain instances whereas under the financial privacy rules, institutions need only provide consumers with the opportunity to opt out of disclosures. In this case, the Agencies anticipate that compliance with the affirmative authorization requirement, consistent with the procedures required under HIPAA, would satisfy the opt out requirement under the financial privacy rules. After HHS publishes its final rules, the Agencies will consult with HHS to avoid the imposition of duplicative or inconsistent requirements.

Section __.2 Rule of Construction

Proposed § __.2 of the rules set out a rule of construction intended to clarify the effect of the examples used in the rules. As noted in the proposal, these examples are not intended to be exhaustive; rather, they are intended to provide guidance about how the rules would apply in specific situations.

Commenters generally agreed that examples are helpful in clarifying how the rule will work in specific circumstances and suggested that the Agencies should include more examples. Many commenters requested the Agencies to provide examples of model disclosures. Commenters also generally agreed that it is useful to state that the list of examples is not intended to be exhaustive, and that compliance with one of the examples would be deemed compliance with the regulation. A few commenters suggested that the regulation state that a financial institution is not obligated to comply with an example but has the latitude to comply with the general rules in other ways. Others stated that the examples ought to be identical in each privacy regulation adopted by the Agencies, the FTC, NCUA, and SEC.

The Agencies believe that more examples would be helpful, and have included additional examples in appropriate places throughout the rule. The Agencies also have provided sample clauses in Appendix A to each Agency's rule to aid financial institutions in their drafting of privacy notices. The sample clauses are provided to illustrate the level of detail the Agencies believe is appropriate. The Agencies caution financial institutions against relying on the sample disclosures without determining the relevance or appropriateness of the disclosure for their operations. The Agencies have used statutory terms, such as ''nonpublic personal information'' and ''nonaffiliated third parties,'' in the sample clauses to convey generally the subject of the clauses. However, a financial institution that uses these terms must provide sufficient information to enable consumers to understand what these terms mean in the context of the institution's notices. Moreover, the Agencies note that, in providing the sample disclosures, the Agencies are addressing solely the level of detail required and are not attempting to provide guidance on issues such as type size, margin width, and so on.

The Agencies have not added a statement in the final rule regarding a financial institution's ability to comply with the rule in ways other than as suggested in the examples, but instead retain the statement that the examples are not exclusive. The rule also states that compliance with the examples will constitute compliance with the rule. The Agencies believe that, when read together, these provisions give financial institutions sufficient flexibility to comply with the regulation but also sufficient guidance about the use of examples.

The Agencies note that an example that mentions a particular activity does not, by itself, authorize a financial institution to engage in that activity. Any such authority must have a different source.

Section __.3 Definitions

a. Affiliate

The proposal adopted the definition of ''affiliate'' that is used in section 509(6) of the GLB Act. An affiliation exists when one company ''controls'' (which is defined in § __.3(g), below), is controlled by, or is under common control with another company. The definition includes both financial institutions and entities that are not financial institutions.

The Agencies received comparatively few comments in response to this definition. One commenter requested that the final rule state that a bank service company will be deemed to be an affiliate of every bank that has an interest in it. The Agencies have declined to adopt this suggestion. If the

relationship between a financial institution and a bank service company satisfies the test for affiliation set out in the statute and regulation, then an affiliation exists.

In light of the comparatively few comments received and the nature of those comments, the Agencies adopt the definition of ''affiliate'' as proposed.

b. Clear and Conspicuous

Under the proposed rules, various notices must be ''clear and conspicuous.'' The proposed rules defined this term to mean that the notice must be reasonably understandable and designed to call attention to the nature and significance of the information contained in the notice. The proposal did not mandate the use of any particular technique for making the notices clear and conspicuous, but provided examples of how a notice may be made clear and conspicuous. As noted in the preamble to the proposed rule, each financial institution retains the flexibility to decide for itself how best to comply with this requirement.

The Agencies received a large number of comments on this proposed definition. Several commenters favored adopting the definition as proposed, with some of these advocating that the final rule add a requirement that disclosures be on a separate piece of paper in order to ensure that they will be conspicuous. Others stated that the definition was unnecessary, given the experience financial institutions have in complying with requirements that disclosures mandated by other laws be clear and conspicuous. Several commenters maintained that the rule proposed is inconsistent with requirements in other consumer protection regulations such as Reg. Z and the Truth in Savings regulation (Regulation DD, 12 CFR part 230), which require only that a disclosure be reasonably understandable. Many of these commenters expressed concern that the examples would invite litigation because of ambiguities inherent in terms used in the examples in the proposed rule such as ''ample line spacing,'' ''wide margins,'' and ''explanations * * * subject to different interpretations.'' A few commenters questioned how the requirement would work in a document that contains several disclosures that each must be clearly and conspicuously disclosed, while others raised questions about how a disclosure may be clear and conspicuous on a website. These comments are addressed below.

New standard for ''clear and conspicuous.'' The Agencies recognize that the proposed definition develops the concept of ''clear and conspicuous'' beyond what is currently understood by the term. However, the Agencies added the phrase ''designed to call attention to the nature and significance of the information contained'' to provide meaning to the term ''conspicuous.'' The Agencies believe that this standard, when coupled with the existing standard requiring that a disclosure be readily understandable, likely will result in notices to consumers that communicate effectively the information needed by consumers to make an informed choice about the privacy of their information, including whether to transact business with a financial institution.

The standard for clear and conspicuous adopted by the Agencies in this rulemaking applies solely to disclosures required under the privacy rules. Disclosures governed by other rules requiring clear and conspicuous disclosures (such as Reg. Z) are beyond the scope of this rulemaking.

Examples of ''clear and conspicuous.'' The Agencies recognize that many of the examples are imprecise. The Agencies believe, however, that more prescriptive examples, while perhaps easier to conform to, likely would result in requirements that would be inappropriate in a given circumstance. To avoid this result, the examples provide generally applicable guidance about ways in which a financial institution may make a disclosure clear and conspicuous. The Agencies note that the examples of how to make a disclosure clear and conspicuous are not mandatory. A financial institution must decide for itself how best to comply with the general rule, and may use techniques not listed in the examples. To address concerns about the imprecision of the examples, the Agencies have incorporated several of the commenters' suggestions in the final rule for ways to make the guidance more helpful.

Combination of several ''clear and conspicuous'' notices. A document may combine several disclosures that each must be clear and conspicuous. The final rule provides an example, in § __.3(b)(2)(ii)(E), of how a financial institution may make disclosures conspicuous, including disclosures on a combined notice. In order to avoid the potential conflicts envisioned by several commenters between two different rules requiring that different sets of disclosures each be provided clearly and conspicuously, the final rule does not mandate precise specifications for how various disclosures must be presented.

Because the Agencies believe that privacy disclosures may be clear and conspicuous when contained in a document containing other disclosures, the rule does not mandate that disclosures be provided on a separate piece of paper. Such a requirement is not necessary and would significantly increase the burden on financial institutions.

Disclosures on web pages. Several commenters requested guidance on how they may clearly and conspicuously disclose privacy-related information on their Internet sites. The Agencies recognize that disclosures over the Internet present some issues that will not arise in paper-based disclosures. There may be web pages within a financial institution's website that consumers may view in a different order each time they access the site, aided by hypertext links. Depending on the customer hardware and software used to access the Internet, some web pages may require consumers to scroll down to view the entire page. To address these issues, the Agencies have included a statement in the example in § __.3(b)(2)(iii) concerning Internet disclosures informing financial institutions that they may comply with the rule if they use text or visual cues to encourage scrolling down the page if necessary to view the entire notice and ensure that other elements on the web site (such as text, graphics, hyperlinks, or sound) do not distract attention from the notice. In addition, a financial institution is to place either a notice or a conspicuous link on a page frequently accessed by consumers, such as a page on which transactions are conducted.

Given current technology, there are a range of approaches a financial institution could take to comply with the rule. For example, a financial institution could use a dialog box that pops up to provide the disclosure before a consumer provides information to the institution. Another approach would be a simple, clearly labeled graphic located near the top of the page or in close proximity to the financial institution's logo, directing the customer, through a hypertext link or hotlink, to the privacy disclosures on a separate web page.

For the reasons advanced above, the Agencies have adopted the definition of ''clear and conspicuous,'' with the changes previously described and with certain other changes intended to make the definition easier to read.

c. Collect

The statute requires a financial institution to include in its initial and annual notices a disclosure of the categories of nonpublic personal

information that the institution collects. The proposal defined ''collect'' to mean obtaining any information that is organized or retrievable on a personally identifiable basis, irrespective of the source of the underlying information. This definition was included to provide guidance about the information that a financial institution must include in its notices and to clarify that the obligations arise regardless of whether the financial institution obtains the information from a consumer or from some other source.

Commenters suggested that the final rule treat information that is not organized and retrievable in an automated fashion as not ''collected.'' This approach would exclude separate documents not included in a file. The Agencies disagree that information should not be deemed to be collected simply because it is not retrievable in an automated fashion. The Agencies believe that the method of retrieval is irrelevant to whether information should be protected under the rule. The Agencies agree, however, that the scope of the regulation should be refined, and have changed the definition of ''collect'' by using language taken from the Privacy Act of 1974 (5 U.S.C. 552a).

Other commenters requested that the rule clarify that information that is received by a financial institution but then immediately passed along without maintaining a copy of the information is not ''collected'' as this term is used in the final rule. The Agencies believe that merely receiving information without maintaining it would not be ''collecting'' the information. The final rule reflects this by stating that the information must be organized or retrievable by the financial institution. Otherwise, the definition of ''collect'' is adopted as proposed.

d. Company

The proposal defined ''company,'' which is used in the definition of ''affiliate,'' as any corporation, limited liability company, business trust, general or limited partnership, association, or similar organization.

The Agencies received no substantive comments on this proposed definition. Accordingly, the Agencies adopt the definition of ''company'' as proposed.

e. Consumer

The GLB Act distinguishes ''consumers'' from ''customers'' for purposes of the notice requirements imposed by the Act. A financial institution is required to give a ''consumer'' the notices required under Title V only if the institution intends to disclose nonpublic personal information about the consumer to a nonaffiliated third party for purposes other than as permitted by section 502(e) of the statute (as implemented by §§ __.14 and __.15 of the final rule). By contrast, a financial institution must give all ''customers'' a notice of the institution's privacy policy at the time of establishing a customer relationship and annually thereafter during the continuation of the customer relationship.

The proposal defined ''consumer'' to mean an individual (and his or her legal representative) who obtains, from a financial institution, financial products or services that are to be used primarily for personal, family, or household purposes. Because ''financial product or service'' is defined to include the evaluation by a financial institution of an application to obtain a financial product or service (*see* further discussion of this point, below) a person becomes a consumer even if the application is denied or withdrawn. An individual also would be deemed to be a consumer for purposes of a financial institution if that institution purchases the individual's account from some other institution.

The Agencies received a large number of comments on this proposed definition, raising questions about how the definition would apply in a variety of situations. These comments are addressed below.

Distinction between ''consumer'' and ''customer.'' While many agreed with the distinction drawn in the proposal between ''consumer'' and ''customer,'' a few commenters suggested that no distinction between ''consumer'' and ''customer'' should be made, given that, in these commenters'' views, the statute appears to use the terms interchangeably. The Agencies believe, however, that the distinction was deliberate and that the rule should implement it accordingly. A plain reading of the statute supports the conclusion that Congress created one set of protections (*i.e.*, a financial institution's privacy policy and opt out notice, and the right to opt out if a financial institution intends to disclose nonpublic personal information to nonaffiliated third parties) for anyone who obtains a financial product or service and an additional set of protections (*i.e.*, the initial notices at the time of establishing a customer relationship and annual notices thereafter) for anyone who establishes a relationship of a more lasting nature than an isolated transaction with a financial institution. Thus, the statute tailors the notice requirements to the type of relationship an individual has with a financial institution. This distinction is preserved in the final rule.

Applicants as consumers. Many of the comments on the proposed definition of ''consumer'' disagreed that someone should be deemed a consumer of a financial institution by virtue of the institution evaluating that individual's application for a financial product or service. These commenters maintained that the individual has not obtained a financial product or service, as is required by the GLB Act. The Agencies remain of the view, however, that it is consistent with both the spirit and the letter of the Act to consider an individual as having obtained a financial product or service when a financial institution evaluates information provided to it from the individual for the purpose of obtaining some other financial product or service. Financial institutions routinely provide several services that are integral to the delivery of a financial product. Frequently among these services is the evaluation by the financial institution of information provided by an individual. In certain instances, such as when an individual is shopping for the best rate on a mortgage loan or the lowest premium for an insurance policy, that evaluation may be the sole financial product or service delivered. In other instances, that evaluation may be one of several services provided in connection with establishing a customer relationship. In some cases financial institutions impose separate charges for considering applications or assessing an individual's credit worthiness, recognizing both the cost to the institution and the value to the individual of this service.

In addition to being consistent with the language of the statute, the proposed definition of ''consumer'' is consistent with one of the primary purposes of Title V of GLB Act, namely, to enable an individual to limit the sharing of nonpublic personal information by a financial institution with a nonaffiliated third party. The information provided by a person to a financial institution before a customer relationship is established is likely to contain the types of information that the statute is designed to protect. This information is no less deserving of protection simply because an application is denied or withdrawn. For these reasons, the Agencies have retained within the definition of ''consumer'' individuals whose applications are evaluated by a financial institution. *See* § __.3(e)(2)(i).

Loan sales. Several commenters requested clarification of whether an individual becomes a consumer in various other scenarios involving loans.

Commenters posited a wide variety of examples, which, if each were to be addressed specifically in the rule, would require a final rule of enormous complexity and detail. The Agencies believe that a rule setting forth a general principle that is flexible enough to be applied in the array of loan transactions posited by the commenters is more appropriate.

Towards this end, the Agencies have stated in the final rule, at § __.3(e)(2)(iv), that a person will be a consumer of any entity that holds ownership or servicing rights to an individual's loan. (The Agencies note that such a person may not be a customer, however; *see* explanation of how the definition ''customer'' will be applied in the loan context, in the discussion of the definition of ''customer'' below. *See also* §§ __.4(c)(2) and__.4(c)(3)(ii) for further discussion concerning when a borrower establishes a customer relationship in the context of a loan sale.) The Agencies believe that financial institutions that own or service a loan are providing a financial product or service to the individual borrower in question. In some cases, the product or service is the funding of the loan, directly or indirectly. In other cases, the product or service is the processing of payments, sending account-related notices, responding to consumer questions and complaints about the handling of the account, and so on. The final rule defines ''consumer'' in a way that covers individuals receiving financial products or services in each of these situations.

Agents of financial institutions. Several commenters agreed with the principle set out in the proposed rule that an individual should not be considered to be a consumer of an entity that is acting as agent for a financial institution. These commenters noted that the financial institution that hires the agent is responsible for that agent's conduct in carrying out the agency responsibilities. The Agencies agree and continue to believe that the financial institution is the entity that has a consumer relationship, even if it uses agents to help it deliver its products or services. Accordingly, the proposed rule retains the rule governing agents, with modifications made to improve its clarity. See § __.3(e)(2)(v).

Legal representative. The Agencies also agree with the suggestion made by several commenters that the definition of ''consumer'' should clarify that the obligations stemming from a consumer relationship may be satisfied by dealing either with the individual who obtains a financial product or service from a financial institution *or* that individual's representative. The Agencies do not intend for the rule to require a financial institution to send opt out and initial notices to *both* the individual and the individual's legal representatives, and have amended the final rule accordingly in § __.3(e)(1).

Trusts. The Agencies received several comments concerning whether an individual who obtains financial services in connection with trusts is a consumer or customer of a financial institution. Several commenters urged the Agencies to generally exempt a financial institution from the requirements of the rule when it acts as a fiduciary, or, in the alternative, clarify the categories of individuals that are considered to be customers. Commenters proposed, for example, that individuals who are beneficiaries with current interests should be identified as customers, whereas individuals who are only contingent beneficiaries should not be customers. Other commenters stated that when the financial institution serves as trustee of a trust, neither the grantor nor beneficiary is a consumer or customer under the rule. In these commenters' view, the trust itself is the institution's ''customer,'' and, therefore, the rule should not apply to a financial institution when it acts as trustee. These commenters also stated that when a financial institution is a trustee, it serves as a fiduciary and is subject to other obligations to protect the confidentiality of the beneficiaries' information that are more stringent than those under the provisions in the GLB Act. Similarly, these and other commenters claimed that an individual who is a participant in an employee benefit plan administered or advised by a financial institution does not qualify as a consumer or customer. The commenters opined that the plan sponsor, or the plan itself, is the ''customer'' for the purposes of the proposed rule. These commenters contended that plan participants have no direct relationship with the financial institution and, in any event, the financial institution is authorized to use information that would be covered under the GLB Act only in accordance with the directions of the plan sponsor. The commenters concluded, therefore, that the regulations should specifically exclude individuals who are participants in an employee benefit plan from the definition of customer.

The Agencies believe that the definition of ''consumer'' in the GLB Act does not squarely resolve whether the beneficiary of a trust is a consumer of the financial institution that is the trustee. The Agencies agree with the commenters who concluded that, when the financial institution serves as trustee of a trust, neither the grantor nor beneficiary is a consumer or customer under the rule. Instead, the trust itself is the institution's ''customer,'' and therefore, the rule does not apply because the trust is not an individual. The Agencies note that a financial institution that is a trustee assumes obligations as a fiduciary, including the duty to protect the confidentiality of the beneficiaries' information, that are consistent with the purposes of the GLB Act and enforceable under state law. Accordingly, the Agencies have excluded an individual who is a beneficiary of a trust or a plan participant of an employee benefit plan from the definitions of ''consumer'' and ''customer.'' Nevertheless, the Agencies believe that an individual who selects a financial institution to be a custodian of securities or assets in an IRA is a ''consumer'' under the GLB Act. The Agencies have included examples in the rule that appropriately illustrate this interpretation of the GLB Act in §§ __.3(e)(2)(vi)–(viii) and § __.3(i)(2)(i)(D).

Requirements arising from consumer relationship. While the proposed and final rules define ''consumer'' broadly, the Agencies note that this will not result in any additional burden to a financial institution in situations where (a) no customer relationship is established and (b) the institution does not intend to disclose nonpublic personal information about a consumer to nonaffiliated third parties. Under the approach taken in the final rule, a financial institution is under no obligation to provide a consumer with any privacy disclosures unless it intends to disclose the consumer's nonpublic personal information to nonaffiliated third parties outside the exemptions in §§ __.14 and __.15. A financial institution that wants to disclose a consumer's nonpublic personal information to nonaffiliated third parties is not prohibited under the final rule from doing so, if the requisite notices are delivered and the consumer does not opt out. Thus, as it applies to consumers who are not customers, the rule allows a financial institution to avoid all of the rule's requirements if it chooses to do so. Conversely, if a financial institution determines that the benefits of disclosing consumers' nonpublic personal information to nonaffiliated third parties outweighs the attendant burdens, the financial institution is free to do so, provided it notifies consumers about the disclosure and affords them a reasonable opportunity to opt out. In this way, the

rule attempts to strike a balance between protecting an individual's nonpublic personal information and minimizing the burden on a financial institution.

f. Consumer Reporting Agency

The proposal adopted the definition of ''consumer reporting agency'' that is used in section 603(f) of the Fair Credit Reporting Act (15 U.S.C. 1681a(f)). This term was used in proposed §§ __.11 and __.13.

The Agencies received no comments suggesting any changes to this definition. Accordingly, the definition is adopted as proposed. It is used in §§ __.6(f), __.12(a), and __.15(a)(5) of the final rule.

g. Control

The proposal defined ''control'' using the tests applied in section 23A of the Federal Reserve Act (12 U.S.C. 371c). This definition is used to determine when companies are affiliated (see discussion of § __.3(a), above), and would result in financial institutions being considered as affiliates regardless of whether the control is by a company or individual.

The Agencies received few comments in response to this definition. The one substantive suggestion received was to adopt a test focused solely on percent of stock owned in a company so as to avoid the uncertainties arising from a ''control in fact'' test. The Agencies believe, however, that any test based only on stock ownership is unlikely to be flexible enough to address all situations in which companies are appropriately deemed to be affiliated. Accordingly, the Agencies adopt the definition of ''control'' as proposed.

h. Customer

The proposal defined ''customer'' as any consumer who has a ''customer relationship'' with a particular financial institution. As is explained more fully in the discussion of § __.4, below, a consumer is a customer of a financial institution when the consumer has a continuing relationship with the institution.

The Agencies received a large number of comments on the definition of ''customer'' and ''customer relationship.'' Given the interdependence of the two terms, the following analysis of the comments received will address both under the heading ''customer relationship.''

i. Customer Relationship

The proposed rules defined ''customer relationship'' as a continuing relationship between a consumer and a financial institution whereby the institution provides a financial product or service that is to be used by the consumer primarily for personal, family, or household purposes.[5] As noted in the proposal, a one-time transaction may be sufficient to establish a customer relationship, depending on the nature of the transaction. A consumer would not become a customer simply by repeatedly engaging in isolated transactions that by themselves would be insufficient to establish a customer relationship, such as withdrawing funds at regular intervals from an ATM owned by an institution at which the consumer has no account. The proposal also stated that a consumer would have a customer relationship with a financial institution that makes a loan to the consumer and then sells the loan but retains the servicing rights. The Agencies received a large number of comments on this definition, as discussed below.

Point at which one becomes a customer. The Agencies received many comments in response to the definitions of ''customer'' and ''customer relationship.'' Commenters criticized what they considered to be the ill-defined line distinguishing consumers from customers. These commenters stated that the proposed distinction makes it difficult for a financial institution to know when the obligations attendant to a customer relationship arise. Several suggested that the distinction should be based on when a consumer and financial institution enter into a written contract for a financial product or service.

The Agencies recognize that the distinction between consumers and customers will, in some instances, require a financial institution to make a judgment about whether a customer relationship is established. In those cases where an individual engages in a transaction for which it is reasonable to expect no further communication about that transaction from the financial institution (such as ATM transactions, purchases of money orders, or cashing of checks), the individual will not have established a customer relationship as a result of that transaction. In other situations where a consumer typically would receive some measure of continued service following, or in connection with, a transaction (such as would be the case when a consumer opens a deposit account, borrows money, or obtains investment advice), a customer relationship will be established. The Agencies believe that the distinction set out in the proposed rule, as further clarified by the examples in the final rule of when a customer relationship is, and is not, established, provides a sufficiently clear line while retaining flexibility to address less clear-cut situations on a case-by-case basis.

Customer relationship defined by written contract. The Agencies agree with those commenters who consider the execution of a written contract by a consumer and financial institution as clear evidence that a customer relationship has been established. The proposed rule cited the execution of a written contract as an example of when a customer relationship is established, and the final rule retains that example in § __.4(c)(3)(i)(B). However, a test based solely on whether there is a written contract could inappropriately exclude situations in which an individual is a customer of a financial institution as a result of obtaining, for instance, financial, economic, or investment advisory services from a financial institution. Accordingly, the final rule does not define a customer relationship solely by the execution of a written contract.

Use of ''isolated transaction'' test. The final rule also does not define the distinction between consumer and customer based solely on whether the transaction is an isolated event. The Agencies used this concept in several examples in the proposed rule to illustrate one of the factors that may go into whether a relationship is of a continuing nature. Several commenters suggested that this approach was insufficiently precise to serve as a workable distinction between consumers and customers. The Agencies agree that the test may not be useful in all instances, but believe that it will help clarify the status of relationships in certain situations. Accordingly, the final rule retains examples in §§ __.3(i)(2)(ii)(A) and (C) that cite the isolated nature of a given transaction as an indication that the transaction in question does not establish a customer relationship.

Purchase of insurance. Other commenters suggested that, in the context of financial institutions that engage in the sale of insurance and that are regulated by the Agencies, the customer should be the policyholder and not the beneficiary. The Agencies agree, and note that the final rule retains the example § __.3(i)(2)(i)(D) of purchasing an insurance product as one situation in which a customer relationship is formed. In this case, the person obtaining a financial product or service from the financial institution is the person purchasing the policy.

Sales of loans. As previously noted, several commenters raised questions in the context of loan sales. Many commenters stated that, under the final

[5] As noted in the preamble to the proposed rule, ''customer'' may be defined differently for purposes of other regulations. *See, e.g.,* 12 CFR 7.4002.

rule, a person should not be considered a customer of two financial institutions when the originating bank sells the servicing rights. A point consistently made by these commenters was that a borrower would be equally well protected with less risk of confusion if the borrower is deemed to be a customer of only one entity in connection with a loan, with that entity perhaps being the party with whom the borrower communicates about the loan. The Agencies believe that it is appropriate to consider a loan transaction as giving rise to only one customer relationship, with the recognition that this customer relationship may be transferred in connection with a sale of part or all of the loan. In this way, the borrower will not be inundated by privacy notices, many of which might be from secondary market purchasers that the borrower did not know had any connection to his or her loan. The Agencies note, however, that a customer will remain a consumer of the entity that transfers the servicing rights, as well as a consumer of any other entity that holds an interest in the loan.

In order to satisfy the statutory requirement that a customer receive an annual notice from a financial institution until that relationship terminates, the final rule provides that the borrower must be deemed to have a customer relationship with at least one of the entities that hold an interest in the loan. In the case of a financial institution that makes a loan, retains it in its portfolio, and provides servicing for the loan, the borrower clearly would have a customer relationship with that institution. Less clear, however, are situations in which servicing is sold or investors purchase a partial interest in a loan. The Agencies have adopted an approach designed to ensure that a customer receives annual notices for the duration of the customer relationship from the most appropriate financial institution.

Under the final rule as stated in § __.3(i)(2)(i)(B), a customer relationship will be established as a general rule with the financial institution that makes a loan to an individual. This customer relationship then will attach to the entity providing servicing. Thus, if the originating lender retains the servicing, it will continue to have a customer relationship with the borrower and will be obligated to provide annual notices for the duration of the customer relationship. If the servicing is sold, then the purchaser of the servicing rights will establish a customer relationship (and the originating lender will have a consumer relationship with the borrower). *See* § __.3(i)(2)(ii)(B). In this way, the borrower will be entitled to receive an initial notice and annual notices from the loan servicer, but will not receive initial and annual notices from entities that hold interests in the loan but are unknown to the consumer.

Mortgage brokers. Several commenters suggested that the use of a mortgage broker should not create a customer relationship. The Agencies disagree. A relationship between a mortgage broker and a consumer is more than an isolated transaction, given that the mortgage broker is likely to provide many services for a consumer, such as analyzing financial information, performing credit checks, negotiating with other financial institutions on the consumer's behalf, and assisting with loan closings. In light of the similarities between the services provided by a mortgage broker and those provided by, for instance, an insured depository institution that makes a mortgage loan, the Agencies believe it is appropriate to consider a mortgage broker to be a financial institution that establishes a customer relationship when the broker enters into an agreement or understanding with a consumer whereby the broker undertakes to arrange or broker a home mortgage loan for the consumer. The final rule reflects this in § __.3(i)(2)(i)(F).

Trusts. The final rule adds an example in § __.3(i)(2)(i)(E) to clarify that an individual will be deemed to establish a customer relationship when a bank acts as a custodian for securities or assets in an IRA. This example is consistent with the explanation set out above in the discussion of ''consumer'' concerning trusts.

j. Federal Functional Regulator

The proposal sought comment on a definition of ''government regulator'' that included each of the Agencies participating in this rulemaking, the Secretary of the Treasury, the NCUA, FTC, SEC, and State insurance authorities under the circumstances identified in the definition. This term was used in the exception set out in proposed § __.11(a)(4) for disclosures to law enforcement agencies, ''including government regulators.''

The few comments that were received on this definition suggested that it be expanded to include additional governmental entities. The Agencies note that, for purposes of the privacy rule, this term is relevant only in the discussion of when a financial institution may disclose information to a law enforcement agency. The exception as stated in the statute uses the term ''federal functional regulator'' (*see* section 502(e)(5)), which term is defined in the statute at section 509(2) and also includes the Secretary of the Treasury for purposes of the exception permitting disclosures to law enforcement agencies. The Agencies have decided that it is appropriate simply to use the term that is used in the statute and adopt its definition.

k. Financial Institution

The proposal defined ''financial institution'' as any institution the business of which is engaging in activities that are financial in nature, or incidental to such financial activities, as described in section 4(k) of the Bank Holding Company Act of 1956 (12 U.S.C. 1843(k)). The proposal exempted from the definition of ''financial institution'' those entities specifically excluded by the GLB Act.

Commenters suggested that the final rule contain several exclusions to this definition, including those for securitization trusts, debt buyers, and credit bureaus. The Agencies have not included these exceptions in the final rule, in part because the Agencies believe that it is inappropriate to exclude many of the activities suggested by commenters and in part because the objective of the suggested exclusions can be achieved in other ways. Even if an entity is a financial institution as that term is used in the GLB Act, it will not have any disclosure responsibilities under the Act or this rule if it does not provide a financial product or service to a consumer. In most of the situations posited by the commenters, the entity in question will not meet that test and, therefore, will fall outside the scope of the rule with respect to privacy disclosures.[6]

For the reasons discussed above, the Agencies adopt the definition of ''financial institution'' as proposed.

l. Financial Product or Service

The proposal defined ''financial product or service'' as a product or service that a financial institution could offer as an activity that is financial in nature, or incidental to such a financial activity, under section 4(k) of the Bank Holding Company Act of 1956, as amended. An activity that is complementary to a financial activity, as described in section 4(k), was not included in the proposed definition of ''financial product or service.'' The proposal's definition included the financial institution's evaluation of information collected in connection

[6] However, these entities will be subject to the limits on redisclosures under § _.11 with respect to any nonpublic personal information they receive from a nonaffiliated financial institution that has disclosure obligations under this rule.

with an application by a consumer for a financial product or service even if the application ultimately is rejected or withdrawn. It also included the distribution of information about a consumer for the purpose of assisting the consumer in obtaining a financial product or service.

Several commenters in response to this proposed definition criticized the Agencies' interpretation of the Act and suggested that the evaluation of application information should not be considered a financial product or service. For the reasons advanced above in the discussion of the definition of ''consumer,'' the Agencies continue to believe that it is appropriate to retain evaluation or brokerage of information as within the scope of financial products or services covered by the rule. Accordingly, the final rule adopts the definition of ''financial product or service'' as proposed.

m. Nonaffiliated Third Party

The proposal defined ''nonaffiliated third party'' as any person (which includes natural persons as well as corporate entities) except (1) an affiliate of a financial institution and (2) a joint employee of a financial institution and a third party. The proposal clarified the circumstances under which a company that is controlled by a financial institution pursuant to that institution's merchant banking activities or insurance company activities would be a ''nonaffiliated third party'' of that financial institution.

The Agencies received very few comments in response to this proposed definition. One commenter requested that the final rule state that a disclosure of information to someone who is serving as a joint employee of two financial institutions should be deemed to have been disclosed to both financial institutions. The Agencies disagree with this result. Instead, the Agencies believe it is appropriate to deem the information to have been given to the financial institution that is providing the financial product or service in question. Thus, for instance, if an employee of an insured depository institution is a dual employee with a securities firm, information received by that person in connection with a securities transaction conducted with the securities firm would be deemed to have been received by the securities firm.

In light of the comments received, the Agencies adopt the definition of ''nonaffiliated third party'' as proposed.

n. Nonpublic Personal Information

Section 509(4) of the GLB Act defines ''nonpublic personal information'' to mean ''personally identifiable financial information'' that is provided by a consumer to a financial institution, results from any transaction with the consumer or any service performed for the consumer, or is otherwise obtained by the financial institution. It also includes any ''list, description, or other grouping of consumers (and publicly available information pertaining to them) that is derived using any nonpublic personal information other than publicly available information.'' The statute excludes publicly available information (unless provided as part of the list, description or other grouping described above), as well as a list, description, or other grouping of consumers (and publicly available information pertaining to them) that is derived without using nonpublic personal information. The statute does not define either ''personally identifiable financial information'' or ''publicly available information.''

The proposed rules implemented this provision of the GLB Act by restating the categories of information described above. The proposed rules presented two alternative approaches to identifying what information would be regarded as publicly available (and therefore, as a general rule, outside the definition of ''nonpublic personal information''). Alternative A deemed information as publicly available only if a financial institution *actually obtained* the information from a public source while Alternative B treated information as publicly available if a financial institution *could* obtain it from such a source. Both Alternatives A and B included within the definition of ''nonpublic personal information'' publicly available information that is provided as part of a list, description, or other grouping of consumers.

Commenters favoring Alternative A noted that it provided the greatest protection for consumers by treating anything the consumer gives to a financial institution to obtain a financial product or service as nonpublic personal information. Under Alternative A, this protection would be lost only if a financial institution actually obtained the information from a public source. These commenters also preferred the bright-line distinction drawn by treating as nonpublic personal information any information given by a consumer to obtain a financial product or service or information that results from transactions between a financial institution and a consumer. However, the majority of those commenting on this issue favored Alternative B, noting that this alternative was consistent with the statute and would be far less burdensome on financial institutions. These commenters suggested that a requirement that the information actually be obtained from a public source would impose needless burden on financial institutions (by requiring, for instance, that a financial institution ''tag'' information they obtained from public records) and is not required by the statute.

The final rule adopts an approach that the Agencies believe incorporates the benefits of both alternatives. Under the final rule, information will be deemed to be ''publicly available'' and therefore excluded from the definition of ''nonpublic personal information'' if a financial institution has a reasonable basis to believe that the information is lawfully made available to the general public from one of the three categories of sources listed in the rule. *See* § __.3(p)(1). The final rule states that a financial institution will have a ''reasonable basis'' for believing that information is lawfully made available if it has taken steps to determine that the information is of the type that is available to the general public and, if an individual could direct that the information not be made available to the general public, whether the individual has done so. In this way, a financial institution will be able to avoid the burden of having to actually obtain information from a public source, but will not be free simply to assume that information is publicly available without some reasonable basis for that belief. The final rule cites, as an example of information a financial institution might reasonably believe to be publicly available, the fact that someone has a loan that is secured by a mortgage in jurisdictions where mortgages are recorded. *See* § __.3(p)(3)(iii)(A). The rule also states that a financial institution will have a reasonable basis to believe that a telephone number is publicly available if the institution either located the number in a telephone book or was informed by the consumer that the number is not unlisted. *See* § __.3(p)(3)(iii)(B).

This approach is based on the underlying principle that, if a consumer has some measure of control over the public availability of his or her information, a financial institution should not automatically assume that the information is in fact publicly available. In the case of a mortgage in most jurisdictions, the borrower has no choice about whether the lender will

make the mortgage a matter of public record; a lender must do so in order to protect its security interest. In the case of a telephone number, a person may request that his or her number be unlisted. Thus, in evaluating whether it is reasonable to believe that information is publicly available, a financial institution should consider whether the information is of a type that a consumer could keep from being a matter of public record.

To implement the complex definition of ''nonpublic personal information'' that is provided in the statute, the final rule adopts a definition that consists, generally speaking, of (1) personally identifiable financial information, plus (2) a consumer list (and publicly available information pertaining to the consumers) that is derived using any personally identifiable financial information that is *not* publicly available. From that body of information, the final rule excludes publicly available information (except as noted above) and any consumer list that is derived without using personally identifiable financial information that is not publicly available. *See* §§ __.3(n)(1) and (2). Examples are provided in § __.3(n)(3) to illustrate how this definition applies in the context of consumer lists.

o. Personally Identifiable Financial Information

The proposed rules defined ''personally identifiable financial information'' to include information that a consumer provides a financial institution in order to obtain a financial product or service, information resulting from any transaction between the consumer and the financial institution involving a financial product or service, and information about a consumer a financial institution otherwise obtains in connection with providing a financial product or service to the consumer. The proposed rule also treated the fact that someone is a customer of a financial institution as personally identifiable financial information. In essence, the proposed rules treated any personally identifiable information as financial if it was obtained by a financial institution in connection with providing a financial product or service to a consumer. The Agencies noted in the preamble to the proposed rule that this interpretation may result in certain information being covered by the rules that may not be considered intrinsically financial, such as health status.

The Agencies received a large number of comments in response to this definition, most of which maintained that the definition inappropriately included certain identifying information that is not financial, such as name, address, and telephone number. Many others maintained that ''personally identifiable financial information'' should not include the fact that someone is a customer of a financial institution. These commenters typically noted that many customer relationships are matters of public record (such as would be the case, for instance, anytime a transaction results in the recordation of a security interest) while other customer relationships are matters of public knowledge (because consumers frequently disclose the relationships by writing checks, using credit cards, and so on). Many commenters stated that aggregate data about a financial institution's customers that lack personal identifiers should not be considered personally identifiable financial information.

Treatment of identifying information as financial. The Agencies continue to believe that it is appropriate to treat any information as financial information if it is requested by a financial institution for the purpose of providing a financial product or service. The Agencies also believe this approach is consistent with the express language of the statute. Although the statute does not define the term ''financial,'' it does include a broad definition of ''financial institution'' which encompasses a large number of entities (such as travel agencies, insurance companies, and data processors) that engage in activities not traditionally considered financial. As a consequence of that definition, the range of information that has a bearing on the terms and availability of a financial product or service or that is used by a financial institution in connection with providing a financial product or service is extremely broad and may include, for instance, medical information and other sorts of information that might not be thought of as financial. Further, the information that the agencies have defined as financial is the information that the institution itself has determined is relevant to providing a financial product or service, as evidenced by the fact that the institution requests the information from the consumer, obtains it from a transaction involving a financial product or service with the consumer, or otherwise obtains it in connection with providing a financial product or service to a consumer.

The Agencies are sensitive to the concern expressed by many commenters, including several hundred private investigators, about the need for ready access to identifying information to locate people attempting to evade their financial obligations. These commenters consistently suggested that names, addresses, and telephone numbers should not be treated as financial information. However, financial institutions rely on a broad range of information, including information such as addresses and telephone numbers, when providing financial products or services. Location information is used by financial institutions to provide a wide variety of financial services, from the sending of checking account statements to the disbursing of funds to a consumer. Other information, such as the maiden name of a consumer's mother often will be used by a financial institution to verify the consumer's identity. The Agencies concluded that it would be inappropriate to exclude certain items of information from the definition of personally identifiable financial information simply because a particular financial institution might not rely on those items when providing a particular financial product or service.

The Agencies note that names, addresses, and telephone numbers, if publicly available, will not be subject to the opt out provisions of the statute unless that information is ''derivative information'' (*i.e.*, information that is part of a list, description, or other grouping of consumers that is derived from personally identifiable financial information that is not publicly available). Thus, in instances involving specific requests about individuals, a financial institution still may disclose information about the individual that the institution reasonably believes to be publicly available, provided that in so doing the institution does not disclose the existence of a customer relationship that is not a matter of public record. Moreover, in instances when a consumer does not opt out, a financial institution may disclose any nonpublic personal information to a nonaffiliated third party provided that the disclosure is consistent with the institution's opt out and privacy notices.

Customer relationship as ''personally identifiable financial information.'' The Agencies disagree with those commenters who maintain that customer relationships should not be considered to be personally identifiable financial information. Clearly, information that a particular person has a customer relationship identifies that person, and thus is personally identifiable. The Agencies believe that this information also is financial under the express terms of the statute, because it communicates that the person in question has a transaction involving a financial product or service with a

financial institution. While this information could in certain cases be a matter of public record, that does not change the analysis of whether the information is personally identifiable financial information.

Changes made to the definition. The final rule makes various stylistic changes to the definition that are intended to make it easier to read and understand. In addition, the final rule adds to the examples of information covered by the rule any information that the institution collects through an information collecting device from a web server, often referred to as a ''cookie.'' See § __.3(o)(2)(F). This illustrates one of the various means by which a financial institution may ''otherwise obtain'' information about a consumer in connection with providing a financial product or service to that consumer.

The final rule also includes, as a negative example in § __.3(o)(2)(ii)(B), a statement that aggregate information or blind data lacking personal identifiers is not covered by the definition of ''personally identifiable financial information.'' The Agencies agree with those commenters who opined that such data, by definition, do not identify any individual.

p. Publicly Available Information

The proposal defined ''publicly available information'' to include information that is lawfully available to the general public from official public records (such as real estate recordations or security interest filings), information from widely distributed media (such as a telephone book, television or radio program, or newspaper), and information that is required to be disclosed to the general public by Federal, State, or local law (such as securities disclosure documents). The proposed rules stated that publicly available information from widely distributed media would include information from an Internet site that is available to the general public without requiring a password or similar restriction.

As previously explained in the discussion of ''nonpublic personal information,'' the proposed rules invited comment on two versions of the definition of ''publicly available information.'' The Agencies have adopted an approach in the final rule that they believe closely tracks the statute while providing much of the benefit provided under Alternative A.

Several commenters questioned the appropriateness of excluding information from the definition of ''publicly available information'' if a person who seeks to obtain the information over the Internet must have a password or comply with a similar restriction. These commenters made the point that many Internet sites are available to a large number of people, each of whom need a user name and identification number to access the sites. Several of these commenters suggested that it is more appropriate to focus on whether the information was lawfully placed on the Internet.

The Agencies agree with these comments, and have amended the final rule to remove the reference to passwords or similar restrictions from the example of the Internet as a ''widely distributed'' medium of communication. In its place, the Agencies have substituted a standard that requires the information, whether from the Internet or otherwise, to be available on an unrestricted basis. Information that an individual specifically requests be compiled, such as information that a locator or ''look up'' service provides with respect to a particular individual that may combine confidential information in addition to publicly available information, will not be considered available to the general public on an unrestricted basis, regardless of whether the information is provided over the Internet or otherwise.

On the other hand, the rule states that an Internet site is not restricted merely because an Internet service provider or a site operator requires a fee or password as long as access is otherwise available to the general public. The traditional use of passwords is to confine the access of individual customers to specific, individual information. However, website operators, in particular, may require user identifications and passwords as a method of tracking access rather than restricting access to the information available through the website. Fees may be levied to obtain access to the Internet or to particular sites rather than restrict access to particular information. For example, Internet service providers may charge a fee for accessing the Internet. Other sites available to the general public, such as daily newspapers, also may charge a fee to access archived information. Therefore, the Agencies believe that the definition of ''widely distributed media'' should properly focus on whether the information is lawfully available to the general public, rather than on the type of medium from which information is obtained.

The Agencies note that the concept of information being lawfully obtained was included in the proposal, and is retained in the final rule. Thus, information unlawfully obtained will not be deemed to be publicly available notwithstanding that it may be available to the general public through widely distributed media.

To help understand how ''nonpublic personal information,'' ''personally identifiable financial information,'' and ''publicly available information'' will work under the final rule, the following example is offered. Assume that Mary provides her bank with various information in order to obtain a mortgage loan and to open a deposit account. Under the final rule, all of this information would be personally identifiable financial information. Once Mary establishes the customer relationships she seeks, the fact that Mary is a mortgage loan customer and a deposit accountholder at the bank also would be personally identifiable financial information.

It may be that certain information provided by Mary, such as her name and address, is publicly available. If the bank has a reasonable basis to believe that this information is publicly available, and if the information was included on a list of the bank's mortgage loan customers that was derived using only publicly available information, then her name and address would fall outside the definition of ''nonpublic personal information'' in those jurisdictions where mortgages are a matter of public record. However, Mary's name and address would be protected as nonpublic personal information if the bank wanted to include those items on a list of its deposit accountholders. The difference in treatment stems from the distinction drawn in the statute between lists prepared using publicly available information (as would be the case in the mortgage loan hypothetical) and lists prepared using information that is not publicly available (as would be the case in the deposit account hypothetical).

The Agencies recognize the complexity of this approach, but believe that it is mandated by the way the statute defines ''nonpublic personal information.'' It also is consistent with the fact that certain relationships are matters of public record, and, therefore, arguably deserving of less protection from disclosure.

q. You

Several Agencies used the pronoun ''you'' to refer to entities within their primary jurisdiction in the proposal and defined ''you'' to mean those entities.[7]

The Agencies received very few comments in response to this definition.

[7] The OCC used the term ''bank'' instead of ''you'' in its regulation.

While one commenter preferred the term ''bank'' to ''you,'' those Agencies using the term ''you'' believe that it makes the rule easier to read and have, therefore, adopted the definition substantially as proposed. The Board has revised its definition of ''you'' to clarify that insurance, broker dealer, investment adviser, and investment company subsidiaries of the financial institutions within its primary jurisdiction are not covered.

Section __.4 Initial Privacy Notice to Consumers Required

The GLB Act requires a financial institution to provide an initial notice of its privacy policies and practices in two circumstances. For customers, the notice must be provided at the time of establishing a customer relationship. For consumers who are not customers, the notice must be provided prior to disclosing nonpublic personal information about the consumer to a nonaffiliated third party.

The proposed rule implemented these requirements by mandating that a financial institution provide the initial notice to an individual prior to the time a customer relationship is established and the opt out notice prior to disclosing nonpublic personal information to nonaffiliated third parties. These disclosures were required under the rule to be clear and conspicuous and to accurately reflect the institution's privacy policies and practices. The proposal also set out rules governing when a customer relationship is established and how a financial institution is to provide notice.

The Agencies received many comments raising concerns about a large number of issues arising under proposed § __.4. Most of the comments raised questions about the time by which initial notices must be provided, whether new notices are required for each new financial product or service obtained by a customer, the point at which a customer relationship is established, and how initial notices may be provided.

Providing Initial Notices ''Prior To'' Time Customer Relationship Is Established

Many commenters stated that, because the statute requires only that the initial notice be provided ''at the time of establishing a customer relationship,'' the regulation should not require that the notice be provided ''prior to'' the point at which a customer relationship is established. These commenters were concerned that the rule could be interpreted as requiring a financial institution to provide disclosures at a point different from when they must provide other federally mandated consumer disclosures during the process of establishing a customer relationship.

In response to these comments, the Agencies have clarified the timing for providing initial notices. The final rule states that, as a general rule, the initial notice must be given not later than the time when a financial institution establishes a customer relationship. *See* § __.4(a)(1). As stated in the preamble to the proposed rule, the initial notices may be provided at the same time a financial institution is required to give other notices, such as those required by the Board's regulations implementing the TILA. This approach, like the approach taken in the proposed rule, strikes a balance between (1) ensuring that consumers will receive privacy notices at a meaningful point along the continuum of ''establishing a customer relationship'' and (2) minimizing unnecessary burden on financial institutions that may otherwise result if the final rule were to require financial institutions to provide consumers with a series of notices at different times in a transaction.

Providing Notices After Customer Relationship Is Established

Several commenters stated that the rule should provide financial institutions with the flexibility to deliver the initial notice *after* the customer relationship is established under certain circumstances. These commenters posited several situations in which a customer relationship is established without face-to-face contact between the consumer and financial institution. The commenters stated that delivery of the initial notice *before* the customer relationship is established in these situations would be impractical, and a requirement along those lines would have a significant adverse effect on the ability to provide a financial product or service to a consumer as quickly as the consumer desires.

The Agencies believe that it is appropriate for financial institutions to have flexibility in certain circumstances to provide the initial notice at a point after the customer relationship is established. To accommodate the wider range of situations presented by the commenters, the Agencies have modified the examples set out in the proposal of when a subsequent delivery of the initial notice is appropriate so that they now are more broadly applicable. As stated in the final rule in § __.4(e), a financial institution may provide the initial notice within a reasonable time after establishing a customer relationship in two instances. First, notice may be provided after the fact if the establishment of the customer relationship is not at the customer's election. See § __.4(e)(1)(i). This might occur, for instance, when a deposit account is sold. Second, a notice may be sent after establishing a customer relationship when to do otherwise would substantially delay the consumer's transaction and the consumer agrees to receive the notice at a later time. See § __.4(e)(1)(ii). An example of this would be when a transaction is conducted over the telephone and the customer desires prompt delivery of the item purchased. Another example of when this might occur is when a bank establishes a customer relationship with an individual under a student loan program as described in the final rule where loan proceeds are disbursed promptly without prior communication between the bank and the customer.

The Agencies note that in most situations, and particularly in situations involving the establishment of a customer relationship in person, a financial institution should give the initial notice at a point when the consumer still has a meaningful choice about whether to enter into the customer relationship. The exceptions listed in the examples, while not exhaustive, are intended to illustrate the less frequent situations when delivery either would pose a significant impediment to the conduct of a routine business practice or the consumer agrees to receive the notice later in order to obtain a financial product or service immediately.

In circumstances when it is appropriate to deliver an initial notice after the customer relationship is established, a financial institution should deliver the notice within a reasonable time thereafter. Several commenters requested that the final rule specify precisely how many days a financial institution has in which to deliver the notice under these circumstances. However, the Agencies believe that a rule prescribing the maximum number of days would be inappropriate because (a) the circumstances of when an after-the-fact notice is appropriate are likely to vary significantly, and (b) a rule that attempts to accommodate every circumstance is likely to provide more time than is appropriate in many instances. Thus, rather than establish a rule that the Agencies believe may be viewed as applicable in all circumstances, the Agencies have elected to retain the more general rule as set out in the proposal in § __.4(e)(1).

As the Agencies noted in the preamble to the proposed rule, nothing in the rule is intended to discourage a financial institution from providing an individual with a privacy notice at an earlier point in the relationship if the institution wishes to do so in order to make it easier for the individual to compare its privacy policies and practices with those of other institutions in advance of conducting transactions.

New Notices Not Required for Each New Financial Product or Service

Several commenters asked whether a new initial notice is required every time a consumer obtains a financial product or service from that financial institution. These commenters suggested that a consumer would not materially benefit from repeated disclosures of the same information, and that requiring additional initial notices to be provided to the same consumer would be burdensome on financial institutions.

The Agencies agree that it would be burdensome with little corresponding benefit to the consumer to require a financial institution to provide the same consumer with additional copies of its initial notice every time the consumer obtains a financial product or service. Accordingly, the final rule states, in § __.4(d), that a financial institution will satisfy the notice requirements when an existing customer obtains a new financial product or service if the institution's initial, revised, or annual notice (as appropriate) is accurate with respect to the new financial product or service.

Joint Accountholders

The majority of comments on how to provide notice suggested that the final rule state that a financial institution is not obligated to provide more than one notice to joint accountholders. Several of these commenters noted that disclosure obligations arising from joint accounts are well settled under other rules, such as the regulations implementing the Equal Credit Opportunity Act (Regulation B, 12 CFR part 202,) and TILA. Commenters noted that under both Reg. B and Reg. Z, a financial institution is permitted to give only one notice. The authorities cited include requirements that the financial institution give disclosures, as appropriate, to the ''primary applicant'' if this is readily apparent (in the case of Reg. B; *see* 12 CFR 202.9(f)) or to a person ''primarily liable on the account'' (in the case of Reg. Z; *see* 12 CFR 226.5(b)).

The Agencies agree that a financial institution should be allowed to provide initial notices in a manner consistent with other disclosure obligations. Accordingly, the final rule clarifies, in § __.9(g), that only one notice is required to be sent in connection with a joint account. A financial institution may, in its discretion, provide notices to each party to the account. This situation might arise, for instance, when a financial institution does not want one opt out election to apply automatically to all joint accountholders (*see* discussion of how to provide opt out notices, below).

Mergers

A few commenters requested guidance on what notices are required in the event of a merger of two financial institutions or an acquisition of one financial institution by another. In such a situation, the need to provide new initial (and opt out) notices to the customers of the entity that ceases to exist will depend on whether the notices previously given to those customers accurately reflect the policies and practices of the surviving entity. If they do, the surviving entity will not be required under the rule to provide new notices.

As was stated in the preamble to the proposed rule, a financial institution may not fail to maintain the protections that it represents in the notice that it will provide. The Agencies expect that financial institutions will take appropriate measures to adhere to their stated policies and practices.

Section __.5 Annual Privacy Notice to Customers Required

Section 503 of the GLB Act requires a financial institution to provide notices of its privacy policies and practices at least annually to its customers ''during the continuation'' of a customer relationship. The proposed rules implemented this requirement by requiring a clear and conspicuous notice that accurately reflects the privacy policies and practices then in effect to be provided at least once during any period of twelve consecutive months. The proposed rules noted that rules governing how to provide an initial notice also would apply to annual notices, and stated that a financial institution would not be required to provide annual notices to a customer with whom it no longer has a continuing relationship.

Several commenters requested that the final rule permit annual notices to be given each calendar year, instead of every twelve months. A variation suggested by a few commenters was to state that notices must be provided during each calendar year, with no more than 15 months elapsing between mailings. To clarify the extent of financial institutions' flexibility, the final rule retains the general rule requiring annual notices but then provides an example, in § __.5(a)(2)(ii), stating that a financial institution may select a calendar year as the 12-month period within which notices will be provided and provide the first annual notice at any point in the calendar year following the year in which the customer relationship was established. The final rule also requires that a financial institution apply the 12-month cycle to its consumers on a consistent basis.

Several commenters suggested that a financial institution be permitted to make the annual notice available upon request only, particularly if there have been no material changes to the notice since it was last delivered. These commenters maintained that little value is added by providing customers with additional copies each year of the same information. Some suggested that financial institutions be permitted to provide a ''short-form'' annual notice, in which the institution informs its customers that there has been no change to its privacy policies and practices and that the customers may obtain a copy upon request.

The Agencies have not amended the final rule to permit this approach, for two reasons. First, the Agencies view the statute as contemplating complete disclosures annually to all customers during the duration of the customer relationship. Section 503 of the GLB Act states that ''not less than annually during the continuation of [a customer] relationship, a financial institution shall provide a clear and conspicuous disclosure to such consumer [*i.e.*, one with whom a customer relationship has been formed], * * * of such financial institution's policies and practices with respect to'' the information enumerated in the statute. The Agencies believe that this provision contemplates a full set of disclosures to each customer once a year.

Second, the clarifications made in the final rule to the disclosure provisions make it clear that a financial institution is not required to provide a lengthy and detailed privacy notice to comply with the rule. Small institutions that do not share information with third parties beyond the statutory exceptions should be able to provide a short, streamlined notice. The rule also permits a financial institution to provide annual notices to customers over the institution's web site if the customer conducts transactions electronically and agrees to such disclosures (*see* additional discussion of this flexibility, below, in § __.9). As a

result, the final rule achieves much of the burden reduction sought by those requesting a short-form annual notice option.

Most of the remaining comments received in response to proposed § __.5 addressed the rules governing when a customer relationship is terminated. Several focused on whether ''dormancy'' of a deposit account, which was presented as an example in the proposed rule of when a customer relationship is terminated, should be determined according to state law or a financial institution's internal policies. These commenters were unanimous in their view that ''dormancy'' should be determined according to an institution's own policies, without reliance on state laws that may produce conflicting results and unnecessary burden for institutions operating in more than one state. A few commenters suggested that the final rule use ''inactive'' instead of ''dormant'' in order to avoid unintended consequences of classifying an account as dormant. In light of these comments, the final rule retains in the examples of when a customer relationship will be terminated the situation where there is no activity in a deposit account according to a financial institution's policies. The Agencies also have used the term ''inactive'' rather than ''dormant'' in § __.5(b)(2)(i) to avoid the unintended consequences posited by the comments.

A few commenters stated that the example of no communication with a customer for twelve months should be amended to clarify that promotional materials would not be considered a communication about the relationship sufficient to extend the duration of the customer relationship. These commenters generally suggested that the rule be tied to communications initiated by the customer. The Agencies agree that a communication that merely informs a person about, or seeks to encourage use of, a financial institution's products or services is not the type of communication that signifies an ongoing relationship. The final rule has been amended in § __.5(b)(2)(iv) to reflect that the distribution of promotional materials will not prolong a customer relationship under the rule. The Agencies disagree, however, that the test should focus on whether there has been any customer-initiated contact, because there will be instances in which the customer will not initiate a contact with a financial institution within the relevant time period but nonetheless has an ongoing relationship.

Section __.6 Information To Be Included in Initial and Annual Privacy Notices

Section 503 of the GLB Act identifies the items of information that must be included in a financial institution's initial and annual notices. Section 503(a) of the GLB Act sets out the general requirement that a financial institution must provide customers with a notice describing the institution's policies and practices with respect to, among other things, disclosing nonpublic personal information to affiliates and nonaffiliated third parties. Section 503(b) of the Act identifies certain elements that must be addressed in that notice.

The proposed rule implemented section 503 by requiring a financial institution to provide information concerning:

- The categories of nonpublic personal information that a financial institution may collect;
- The categories of nonpublic personal information that a financial institution may disclose;
- The categories of affiliates and nonaffiliated third parties to whom a financial institution discloses nonpublic personal information, other than those to whom information is disclosed pursuant to an exception in section 502(e) of the GLB Act;
- The financial institution's policies with respect to sharing information about former customers;
- The categories of information that are disclosed pursuant to agreements with third party service providers and joint marketers and the categories of third parties providing the services;
- A consumer's right to opt out of the disclosure of nonpublic personal information to nonaffiliated third parties;
- Any disclosures regarding affiliate information sharing opt outs a financial institution is providing under the FCRA; and
- The bank's policies and practices with respect to protecting the confidentiality, security, and integrity of nonpublic personal information.

The Agencies received a large number of comments concerning these requirements, with the majority of comments making the points summarized below.

Level of Detail Required

Many commenters offered the general observation that the level of detail that would be required under the proposed rule would result in lengthy, complicated, and ultimately confusing disclosures. These comments have led the Agencies to conclude that additional clarification is required concerning the level of detail that the Agencies expect a financial institution's initial and annual disclosures to contain.

The Agencies do not believe that the statute requires—nor do the Agencies intend to require—a financial institution to publish lengthy disclosures that identify with precision every type of information collected or disclosed, the name of every entity with whom the financial institution shares information, and a complete description of the technical specifications of how the institution protects its customers' records or the identity of each employee who has access to such records. Instead, the Agencies have concluded that the statute, by focusing on ''categories'' of information and recipients of information, is intended to require notices that provide consumers with a general description of the third parties to whom a financial institution discloses nonpublic personal information, the types of information it discloses, and the other information about the institution's privacy policies and practices listed above. The final rule, like the proposal, permits a financial institution to comply with these notice requirements by providing a description that is representative of its privacy policies and practices. The Agencies believe that in most cases the initial and annual disclosure requirements can be satisfied by disclosures contained in a tri-fold brochure.

To address commenters' concerns about the likelihood that consumers will not read long, detailed disclosures, the Agencies have revised the examples of the disclosures set out in proposed § __.6(c) to clarify the level of detail that the Agencies think is appropriate under the statute. Sample clauses have been provided in Appendix A to the rules, and guidance for certain institutions has been set out later in this preamble. Because the examples are not exclusive, the final rule permits a financial institution to use different categories than those provided in the examples, thereby providing additional flexibility for financial institutions in complying with the disclosure requirements. In addition, the language in § __.6(a) that precedes the items of information to be addressed in the initial notice has been amended to clarify that a financial institution is required only to address those items that apply to the institution. Thus, for instance, if a financial institution does not disclose nonpublic personal information to third parties, it may simply omit any reference to the categories of affiliates and nonaffiliated third parties to whom the institution

discloses nonpublic personal information.

As was noted in the preamble to the proposed rule, the required content is the same for both the initial and annual notices of privacy policies and practices. While the information contained in the notices must be accurate as of the time the notices are provided, a financial institution may prepare its notices based on current and anticipated policies and practices.

Short-Form Initial Notice

The Agencies have reconsidered the need to give consumers a copy of a financial institution's complete initial notice when there is no customer relationship. In these circumstances, the Agencies believe that the objectives of the statute can be accomplished in a less burdensome way than was proposed. Accordingly, the Agencies have exercised their exemptive authority as provided in section 504(b) to create an exception to the general rule that otherwise requires a financial institution to provide both the initial and opt out notices to a consumer before disclosing nonpublic personal information about that consumer to nonaffiliated third parties.

This exception is set out in § __.6(d) of the final rule, which states that a financial institution may provide a ''short-form'' initial privacy policy notice along with the opt out notice to a consumer with whom the institution does not have a customer relationship. The short-form notice must clearly and conspicuously state that the disclosure containing information about the institution's privacy policies and practices is available upon request and provide one or more reasonable means by which the consumer may obtain a copy of the notice. This approach reflects the Agencies' belief that a consumer who does not become a customer of a financial institution generally may have less interest in certain elements of the institution's privacy policies. Relative to other aspects of the transaction, the consumer may receive greater benefit from obtaining a concise, but meaningful, opt out notice that informs the consumer about the categories of his or her information the institution may disclose and the categories of nonaffiliated third parties that may receive the information. The rule also requires a financial institution to provide a consumer who is interested in the more complete privacy disclosures with a reasonable means to obtain them.

Information About Affiliate Sharing

Another point made by several commenters in response to proposed § __.6 was that the rule should not include a requirement that categories of affiliates with whom a financial institution shares information be included in the initial and annual notices. These commenters pointed out that the statute specifically requires disclosures of categories of nonaffiliated third parties only, and that the only statutorily mandated disclosures concerning affiliate sharing are disclosures required, if any, concerning affiliate sharing pursuant to section 603(d)(2)(A)(iii) of the Fair Credit Reporting Act (FCRA) (15 U.S.C. 1681a(d)(2)(A)(iii)). [8] These commenters concluded that the Agencies, by expanding the disclosure requirements in the manner prescribed in the proposed rule, would be exceeding their rulemaking authority and imposing unnecessary burden on financial institutions.

The Agencies believe that the language and legislative history of section 503 support requiring disclosures of affiliate sharing beyond what may be required by the FCRA. First, section 503(b) does not state that the items listed therein are to be the only items set out in a financial institution's initial and annual disclosures. Instead, it uses the nonrestrictive phrase ''shall include'' when discussing the contents of the disclosures, thereby preserving flexibility for the Agencies (which were expressly granted authority under section 503(a) to prescribe rules governing these notices) to require that additional items be addressed in the disclosures consistent with those specifically enumerated.

Second, section 503(a) states that the financial institution shall provide in its initial and annual notices ''a clear and conspicuous disclosure * * * of such financial institution's policies and practices with respect to—(1) disclosing nonpublic personal information to affiliates and nonaffiliated third parties, consistent with section 502, including the categories of information that may be disclosed; * * *'' While the FCRA disclosures would be a subset of the disclosures required by section 503(a)(1), they may not be sufficient to fully satisfy that requirement.

Third, the legislative history of the GLB Act suggests that Congress intended for the disclosures to provide more information about affiliate sharing than what may be required under the FCRA.[9] That history underscores the Congressional intent of ensuring that individuals are given the opportunity to make informed decisions about the privacy policies and practices of financial institutions. The Agencies believe that limiting the disclosures about affiliate sharing just to those disclosures that may be required under the FCRA would frustrate that purpose.

Disclosures of the FCRA Opt Out Right

Another commonly advanced argument was that a financial institution should not be required to include FCRA disclosures in its annual notices. As previously discussed, section 503(b)(4) of the GLB Act requires a financial institution's initial and annual notice to include the disclosures required, if any, under section 603(d)(2)(A)(iii) of the FCRA. The proposed rules implemented section 503(b)(4) of the GLB Act by including the requirement that a financial institution's initial and annual notice include any disclosures a financial institution makes under section 603(d)(2)(A)(iii) of the FCRA. Several commenters pointed out that the FCRA requires disclosures of a consumer's right to opt out of affiliate sharing only once. They noted that the GLB Act states, in section 506(c), that nothing in the GLB Act is to be construed to modify, limit, or supersede the operation of the FCRA. These commenters maintain that the ''if any'' language of section 503(b)(4), read in the context of section 506, suggests that, since at most only one notice must be provided under the FCRA, section 503 should require only one FCRA disclosure under the privacy rule. The commenters concluded that, by requiring more notices than are required

[8] Section 603(d)(2)(A)(iii) excludes from the definition of ''consumer report'' the communication of certain consumer information among affiliated entities if the consumer is notified about the disclosure of such information and given an opportunity to opt out of the disclosure of that information. The information that can be disclosed to affiliates under this provision includes, for instance, information from consumer reports and applications for financial products or services. In general, this information represents personal information provided directly by the consumer to the institution, such as income and assets, in addition to information contained within consumer reports.

[9] *See, e.g.*, remarks of Sen. Gramm (noting that the privacy bill contains ''for the first time a full disclosure requirement. It requires every bank in America, when you open your account to tell you precisely what their policy is: Do they share personal financial information within the bank? Do they share it outside the bank?''), 145 Cong. Rec. S13786 (daily ed. Nov. 3, 1999); remarks of Sen. Hagel, *id.* at S13876 (''Financial institutions would be required to disclose their privacy policies to their customers on a timely basis. If customers do not believe adequate protections exist at their institution, they can take their business elsewhere.'').

under the FCRA, the Agencies would be violating this express preservation of the FCRA.

As discussed above, the Agencies believe that a financial institution, in order to comply with the requirement that it disclose its policies and practices with respect to sharing information with affiliated and nonaffiliated third parties, must describe the circumstances under which it will be sharing information with affiliates. Clearly, the ability of consumers to opt out of affiliate information sharing under the FCRA affects a financial institution's policies and practices with respect to disclosing information to its affiliates. Failing to include this information and an explanation of how the opt out right may be exercised would, in the view of the Agencies, make the disclosures incomplete. Thus, a financial institution will need to include this information in its initial and annual notices.

The Agencies note, moreover, that they disagree with the commenters' reading of sections 503 and 506. Section 503 does not distinguish between the disclosures to be provided in the initial notice from those to be provided in the annual notice. Thus, a plain reading of section 503 suggests that any disclosures that are required under the FCRA must be included in both the initial and annual notices.

The Agencies interpret the ''if any'' language as a recognition that not all institutions provide FCRA notices because not all institutions engage in the type of affiliate sharing covered by the FCRA. By requiring the FCRA notice to appear as part of the annual notice under the privacy rule, the Agencies believe that they are not modifying, limiting, or superseding the operation of the FCRA; financial institutions will have exactly the same FCRA obligations following the effective date of the privacy rule as they had before. The only difference will be that, as is required by the GLB Act, a financial institution's initial and annual disclosures about its privacy policy and practices will need to reflect how the financial institution complies with the affiliate sharing provisions of the FCRA.

Disclosures of the Right to Opt Out

Other commenters suggested that the final rule eliminate the requirement that the initial and annual notices contain disclosures about a consumer's right to opt out. These commenters pointed out that the statute does not specifically require these disclosures.

As previously discussed, section 503(a) of the statute requires a financial institution to disclose its policies and practices with respect to sharing information, both with affiliated and nonaffiliated third parties. Given that a financial institution's practices with respect to sharing nonpublic personal information with nonaffiliated third parties will be affected by the opt out rights created by the statute, an institution will need to describe these opt out rights in order to provide a complete disclosure that satisfies the statute.

Other Comments

The Agencies received many comments expressing support for a number of the provisions in proposed §__.6. For instance, several commenters noted their agreement with the approach of permitting a financial institution to state generally that it makes disclosures to nonaffiliated third parties ''as permitted by law'' to describe disclosures made pursuant to one of the exceptions. Others agreed with the proposed flexibility to allow a disclosure to be based on current and contemplated information sharing. In light of these comments, the Agencies have adopted proposed §__.6 with changes as discussed above. The final rule makes several other stylistic changes to the material in §__.6 that are intended to make the rule easier to read. [10]

Section __.7 Form of Opt Out Notice to Consumers; Opt Out Methods

Paragraph (a) of proposed §__.8 required that any opt out notice provided by a financial institution be clear and conspicuous and accurately explain the right to opt out. The proposed rule also required a financial institution to provide the consumer with a reasonable means by which to opt out, required a financial institution to honor an opt out election as soon as reasonably practicable, and stated that an opt out election survived until revoked by the consumer. The Agencies received a large number of comments in response to each of these provisions, addressing the application of these rules to joint accounts, the means by which an opt out right may be exercised, duration of an opt out, the level of detail required in the opt out notice, and the time by which an opt out election must be honored. These points are addressed below.

Joint Accounts

Most of the commenters on this issue stated that a financial institution should have the option of providing one notice per account, regardless of the number of persons on the account. The Agencies agree that this is appropriate, and have added a new §__.7(d) to address this issue. Under the final rule, a financial institution has the option of providing only one initial, annual, and opt out notice per account. However, any of the accountholders must have the right to opt out. The final rule requires a financial institution to state in the opt out notice provided to a joint accountholder whether the institution will consider an opt out by a joint accountholder as an opt out by all of the associated accountholders or whether each accountholder is permitted to opt out separately.

Means of Opting Out

Another issue addressed by many commenters concerned the means by which consumers may opt out. Several suggested that a financial institution, after having provided reasonable means of opting out, should be able to require consumers to use those means exclusively. The Agencies agree with this suggestion, recognizing that a financial institution may not have trained personnel or systems in place to handle opt out elections at each point of contact between a consumer and financial institution. Assuming a financial institution offers one or more of the opt out means provided in the examples in the final rule or a means of opting out that is comparably convenient for a consumer, the institution may require consumers to opt out in accordance with those means and choose not to honor opt out elections communicated to the institution through alternative means. A new paragraph (iv) has been added to §__.7(a)(2)(iv) to reflect this.

The final rule adds an example of a toll-free telephone number in §__.7(a)(2)(ii)(D) as another way by which financial institutions may allow consumers to opt out. As stated in §__.7(a)(2)(iii)(A), a financial institution may not require a consumer to write his or her own letter in order to opt out.

Duration of Opt Out

Several commenters requested that the rule concerning duration of an opt out, as provided in §__.8(e) of the proposal, be changed to require a more workable approach. These commenters noted that, under the proposal, a financial institution would be required to keep track of opt out elections forever. To illustrate their point, the commenters posited the example of a person who opts out during the course of establishing a customer relationship with a financial institution, terminates that relationship, and then establishes

[10] The Agencies expect to publish proposed standards in the near future relating to administrative, technical, and physical safeguards as required by section 501(b) of the GLB Act.

another customer relationship several years later, perhaps under a different name or with someone on a joint account. The commenters suggested that it would be more appropriate in these circumstances to treat the opt out election made in connection with the first relationship as applying solely to that relationship.

The Agencies agree with the commenters' suggestions. Thus, under the final rule, a financial institution is to treat an opt out election made by a customer in connection with a prior customer relationship as applying solely to the nonpublic personal information that the financial institution collected during, or related to, that relationship. That opt out will continue until the customer revokes it. However, if the customer relationship terminates and a new one is established at a later point, the financial institution must then provide a new opt out notice to the customer in connection with the new relationship and any prior opt out election does not apply to the new relationship.

Level of Detail Required in Opt Out Notice

A few commenters expressed concern about the level of detail they perceived the proposed rule to require in an opt out notice. These commenters interpreted the statement in proposed §__.8(a)(2) that a financial institution ''provides adequate notice * * * if [the institution] identifies all of the categories of nonpublic personal information that [the institution] discloses or reserves the right to disclose to nonaffiliated third parties as described in [§__.6]'' as requiring a more detailed disclosure of categories of nonpublic personal information and nonaffiliated third parties than is required in the initial and annual notices.

The Agencies did not intend this result, and specifically referred to §__.6 in the proposed opt out provision to address precisely the concern raised by these commenters. The disclosures in the initial and annual notices of the categories of nonpublic personal information being disclosed and the categories of nonaffiliated third parties to whom the information is disclosed will suffice for purposes of the opt out notices as well. If the opt out notice is a part of the same document that contains the disclosures that must be included in the initial notice, then the financial institution is not required to restate the same information in the opt out notice. In this instance, the rule requires only that the categories of nonpublic personal information the institution intends to share and the categories of nonaffiliated third parties with whom it will share are clearly disclosed to the consumer when the opt out and privacy notices are read together.

One commenter suggested that, while a financial institution should have the option of providing an opt out notice that is sufficiently broad to cover anticipated disclosures, the financial institution also should be permitted to provide a customer who already has opted out with a new opt out notice in connection with a new financial product or service and, if the consumer does not opt out a second time, be free to disclose nonpublic personal information obtained in connection with that financial product or service to nonaffiliated third parties. The Agencies believe that a financial institution should be permitted the flexibility to provide opt out notices that are either narrowly tailored to specific types of nonpublic personal information and types of nonaffiliated third parties or that are more broadly worded to anticipate future disclosure plans. However, if a consumer opts out after receiving an opt out notice from a financial institution that is broad enough to cover the new type of information sharing desired by that institution, the failure of the consumer to opt out again does not revoke the earlier opt out election.

Time by Which Opt Out Must Be Honored

Under the proposal, a financial institution is directed to comply with an opt out election ''as soon as reasonably practicable.'' A large number of comments asked the Agencies to clarify in the final rule how long a financial institution has after receiving an opt out election to cease disclosing nonpublic personal information to nonaffiliated third parties. Suggestions for a more precise standard ranged from mandating that a financial institution stop disclosing information immediately to a mandatory cessation within several months of receiving the opt out. As was the case with other suggestions for bright-line standards in different contexts, the Agencies believe that it is appropriate to retain a more general rule in light of the wide range of practices throughout the financial institutions industry. A potential drawback of a more prescriptive rule is that an institution might use the standard as a safe harbor in all instances and thus fail to honor an opt out election as early as it is otherwise capable of doing. Another drawback is that a standard that is set in light of current industry practices and capabilities is likely to become outmoded quickly as advances in technology increase efficiency. The Agencies therefore decline to adopt a more rigid standard, and instead retain the rule as set out in §__.7(e) of the final rule.

For the reasons stated above, the Agencies adopt, in §__.7, the rule governing the form of opt out notices and methods of opting out as discussed above. This section contains other stylistic changes to what was proposed in order to make the final rule easier to read.

Section __.8 Revised Privacy Notices

The proposed rule, in § __.8(c), prohibited a financial institution, directly or through its affiliates, from disclosing nonpublic personal information about its consumers to nonaffiliated third parties unless the institution first provided a copy of its privacy notice and opt out notice. The proposal also required that these notices be accurate when given. Thus, if an institution wants to disclose nonpublic personal information in a way that is not accurately described in its notices, the institution would be required under the proposed rule to provide new notices before making the disclosure in question.

The Agencies received no comments raising questions about these requirements. Accordingly, the final rule adopts them, but sets them out in a separate section (§ __.8) in the final rule for emphasis. The final rule sets out examples in § __.8(b) of when a new notice would, and would not, be required.

Section __.9 Delivering Privacy and Opt Out Notices

The proposed rules governing delivery of initial, annual, and opt out notices were set out in proposed §§ __.4(d), __.5(b), and __.8(b), respectively. Given the substantial similarities between the three sets of rules, the Agencies have decided to combine the rules in one section in order to make it easier for the reader. Accordingly, the final rule states these rules in § __.9.

The general rule requires that notices be provided in a manner so that each consumer can reasonably be expected to receive actual notice in writing, or, if the consumer agrees, electronically. The Agencies received a number of comments on the various provisions governing delivery, as discussed below.

Posting Initial Notices on a Web Site

A few commenters suggested that a financial institution be allowed to

deliver initial notices simply by posting its notice on the institution's web site. The Agencies recognize that there will be instances when a notice on a web site may be delivered in a way that will enable the financial institution to reasonably expect that the consumer will receive it. The final rule retains, as an example of one way to comply with the rule, the posting of a notice on a web site and requiring a consumer to acknowledge receipt of the notice as a step in the process of obtaining a financial product or service. *See* § __.9(b)(1)(iii). However, the Agencies believe that the mere posting of a notice on a web site would not be sufficient in all cases for the financial institution to reasonably expect its consumers to receive the notice. Accordingly, the Agencies have declined to expand the rule beyond the circumstance described in the example provided.

Posting Annual Notices on a Web Site

Several commenters requested that a privacy notice posted by a financial institution on its web site be deemed to satisfy the annual notice requirement, at least for customers who agree to receive notices on the institution's web site. The Agencies believe that it is appropriate to provide annual notices in this way for customers who conduct transactions electronically and agree to accept notices on a web site. Accordingly, the Agencies have amended the rule by adding a new § __.9(c)(1) to clarify that a financial institution may reasonably expect a customer who uses the institution's web site to access financial products or services will receive actual notice if the customer has agreed to accept notices at the institution's web site and the financial institution posts a current notice of its privacy policies and practices continuously and in a clear and conspicuous manner on the web site. The Agencies believe that this will reduce burden on financial institutions while ensuring that customers who transact business electronically will have continuous access to institutions' privacy policies and practices.

Disclosures to Customers Requesting No Communication

Several commenters suggested the Agencies clarify in the final rule how the disclosure obligations may be met in the case of a customer who requests that the institution refrain from sending information about the customer's relationship. These commenters stated that, in this case, the customer's request should be honored.

The Agencies agree. When a customer provides explicit instructions for a financial institution not to communicate with that customer, the Agencies believe that the request should be honored. The final rule clarifies, in § __.9(c), that financial institutions need not send notices to a customer who requests no communication, provided that a notice is available upon request.

Reaccessing a Notice

A few commenters stated that the requirement that a privacy policy be provided in a way that enables a customer to either retain or reaccess the notice should clarify that the rule obligates a financial institution to make available only the privacy policy currently in effect. These commenters were concerned about the potential for confusion and the burden stemming from a rule that would require a financial institution to make available every version of its privacy policies. The Agencies agree that it is appropriate to require only that the current privacy policy be made available to someone seeking to obtain it after having received the initial notice, and have amended the rule accordingly in § __.9(e)(2)(iii).

Joint Notices

Other commenters requested that the rule clarify that the privacy policies and practices of several different affiliated financial institutions may be described on a single notice. Related to this point, commenters requested that the final rule address whether affiliated financial institutions, each of whom has a customer relationship with the same consumer, may elect to send only one notice to the consumer on behalf of all of the affiliates covered by the notice and have that one notice satisfy the disclosure obligations under § __.4 of each affiliate. The Agencies believe that financial institutions should be able to combine initial disclosures in one document. The Agencies also believe that it is appropriate to permit financial institutions that prepare a combined initial, annual, or revised notice to give, on a collective basis, a consumer only one copy of the notice. The final rule reflects this flexibility, in § __.9(f). The Agencies emphasize that the notice must be accurate for all financial institutions using the notice and must identify by name each of the institutions.

Section __.10 Limits on Disclosure of Nonpublic Personal Information to Nonaffiliated Third Parties

Section 502(a) of the GLB Act generally prohibits a financial institution, directly or through its affiliates, from sharing nonpublic personal information about a consumer with a nonaffiliated third party unless the institution provides the consumer with a notice of the institution's privacy policies and practices. Section 502(b) further requires that the financial institution provide the consumer with a clear and conspicuous notice that the consumer's nonpublic personal information may be disclosed to nonaffiliated third parties, that the consumer be given an opportunity to opt out of that disclosure, and that the consumer be informed of how to opt out. Section __.7 of the proposed rules implemented these provisions by requiring a financial institution to give the consumer the initial notice required by § __.4, the opt out notice required by § __.8, and a reasonable opportunity to opt out.

Most of the comments on this section focused on the question of what is a reasonable opportunity to opt out. Suggestions ranged from a financial institution having the right to begin sharing information immediately (when the opt out and initial notices are provided as part of a transaction being conducted electronically, such as might be the case in an ATM transaction) up to a mandatory delay of 120 days from the time the notices are provided.

The Agencies believe that the wide variety of suggestions underscores the appropriateness of a more general test that avoids setting a mandatory waiting period applicable in all cases. For isolated transactions where a financial institution intends to disclose nonpublic personal information that it obtains through an electronic transaction and the consumer is provided a convenient means of opting out as part of the transaction, it would be reasonable not to force the financial institution to wait a set period of time before sharing the information. An example of this is provided at § __.10(a)(3)(iii). For notices that are provided by mail, the Agencies believe it is appropriate to allow the consumer additional time. In these latter instances, the Agencies consider it reasonable to permit the consumer to opt out by mailing back a form, by calling a toll-free number, or by any other reasonable means within 30 days from the date the opt out notice was mailed. *See* § __.10(a)(3)(i). The final rule also provides an example of a reasonable opportunity for opting out in connection with accounts opened on-line. *See* § __.10(a)(3)(ii). However, rather than try to anticipate every scenario and establish a time frame that would accommodate each, the Agencies think it is appropriate simply to state that the consumer must be given a reasonable opportunity to opt out and then provide a few illustrative examples

of what would be reasonable in different contexts.

Other comments pointed out that proposed § __.7(a)(3)(i) (§ __.10(a)(3)(i) of the final rule) inappropriately implied that the opportunity to opt out by mail is available only when a consumer has a customer relationship with the financial institution. The final rule deletes the reference to a customer relationship in that section to avoid creating that implication.

Section __.11 Limits on Redisclosure and Reuse of Information

Section 502(c) of the GLB Act provides that a nonaffiliated third party that receives nonpublic personal information from a financial institution shall not, directly or indirectly through an affiliate, disclose the information to any person that is not affiliated with both the financial institution and the third party, unless the disclosure would be lawful if made directly by the financial institution. A financial institution may generally disclose nonpublic personal information to a nonaffiliated third party for any purpose subject to notice and opt out, for certain service and joint marketing arrangements under section 502(b), and in accordance with specific enumerated exceptions under section 502(e).

The limits on redisclosure and reuse that were set out in the proposal reflected the Agencies' belief that implicit in the joint marketing and the enumerated exceptions is the idea that information may only be used for the purposes for which the third party received it.[11] The proposed rule implemented section 502(c) by imposing limits on redisclosure that apply both to a financial institution that receives information from a nonaffiliated financial institution and to any nonaffiliated third party that receives nonpublic personal information from a financial institution. The proposed rule implemented the implicit limitations on use by imposing limits on the ability of financial institutions and nonaffiliated third parties to reuse nonpublic personal information they receive. The Agencies sought comment on whether the final rule should limit the ability of an entity that receives nonpublic personal information pursuant to an exception to use that information only for the purpose of that exception. The Agencies also sought comment on what the term ''lawful'' means in the context of section 502(c), and whether a recipient of nonpublic personal information could ''lawfully'' disclose information if the disclosure complied with a notice provided by the institution that made the disclosure initially. Finally, the Agencies invited comment on whether the rules should require a financial institution that discloses nonpublic personal information to a nonaffiliated third party to develop policies and procedures to ensure that the third party complies with the limits on redisclosure of that information.

The Agencies received a large number of comments in response to this proposed section. A few maintained that the Agencies would exceed their rulemaking authority if the final rule were to retain the limits on reuse of information, given that section 502(c) expressly addresses only redisclosures and not reuse. Most comments concerning proposed § __.12 stated that financial institutions should not have to monitor compliance with the redisclosure and reuse provisions of the rule, although these commenters said that financial institutions typically will contractually limit the recipient's ability to reuse information for purposes other than those for which the information was disclosed. These issues are addressed below.

Limits on Reuse and Redisclosure

The position advanced by those critical of imposing limits on reuse is premised on the conclusion that Congress, by addressing limits on redisclosures in section 502(c), provided the only limits that may be imposed on what a recipient of nonpublic personal information can do with that information. The Agencies disagree with this premise. Although section 502(c) does not expressly address reuse, reuse limitations are, as indicated, implicit in the provisions authorizing or permitting disclosures. For example, it would be inconsistent with the purposes of the Act to permit information disclosed in accordance with section 502(e)(1) (which permits disclosures as necessary to effect, administer, or enforce a transaction with a consumer or in connection with certain routine activities related to such a transaction) to be used for the third party recipient's marketing purposes. Moreover, permitting reuse without limits would undermine the protections afforded to a consumer who does not establish a customer relationship. Such a person is not put on notice that the disclosures under section 502(e) are even made because these disclosures do not entitle the consumer to any privacy or opt out notice. Thus, the limits on reuse are the only protection the individual has arising under the statute. Accordingly, the Agencies have concluded that it is appropriate to exercise their rulemaking authority under section 504(a)(1) (which authorizes the Agencies to write regulations necessary to carry out the purposes of Subtitle A of Title V) to impose limits on reuse when information is received under an exception in section 502(e) of the GLB Act.

By contrast, when a consumer decides not to opt out after being given adequate notices and the opportunity to do so, that consumer has made a decision to permit the sharing of his or her nonpublic personal information with the categories of entities identified in the financial institution's notices. The consumer's primary protection in the case of a disclosure falling outside the section 502(e) exceptions comes from receiving the mandatory disclosures and the right to opt out. The statute provides only the additional protection in section 502(c), restricting a recipient's ability to redisclose information to entities that are not affiliated with either the recipient or the financial institution making the disclosure initially. Thus, if a consumer permits a financial institution to disclose nonpublic personal information to the categories of nonaffiliated third parties that are described in the institution's notices, recipients of that nonpublic personal information appear authorized under the statute to make disclosures that comply with those notices.

To implement this statutory scheme, the Agencies have imposed the following limits on redisclosure and reuse, which will vary depending on whether the information was provided pursuant to one of the 502(e) exceptions or otherwise.

Limits on redisclosure and reuse when information is received pursuant to section 502(e). For nonpublic personal information provided pursuant to section 502(e), a financial institution receiving the information may disclose the information to its affiliates or to affiliates of the financial institution from which the information was received. It may also disclose and use the information pursuant to an exception in §§ __.14 or __.15 in the ordinary course of business to carry out the activity covered by the exception under which the institution received the information. The financial institution's affiliates may disclose and use the information, but only to the extent permissible for the financial institution.

These same general rules apply to a non-financial institution third party that receives nonpublic personal information from a financial institution under

[11] For example, as discussed further below, permitted use for an enumerated exception would not include use for marketing purposes.

section 502(e). Thus, the third party receiving the information pursuant to one of the section 502(e) exceptions may disclose the information to its affiliates or to the affiliates of the financial institution that made the disclosure. The third party also may disclose and use the information pursuant to one of the section 502(e) exceptions as noted in the rule. The affiliates of the third party may disclose and use the information only to the extent permissible for the third party.

Limits on redisclosure when information is not received pursuant to section 502(e). For nonpublic personal information provided *outside* one of the section 502(e) exceptions, the financial institution receiving the information may disclose the information to its affiliates or to the affiliates of the financial institution that made the initial disclosure. It may also disclose the information to any other person, if the disclosure would be lawful if made directly by the financial institution from which the information was received. This would enable the receiving institution to disclose pursuant to one of the section 502(e) exceptions. It also would permit the receiving institution to redisclose information in accordance with the opt out and privacy notices given by the institution making the initial disclosures, as limited by any opt out elections received by that institution. The affiliates of a financial institution that receives nonpublic personal information may disclose only to the extent that the financial institution may disclose the information.

If a third party receives information from a financial institution outside one of the section 502(e) exceptions, the third party may disclose to its affiliates or to the affiliates of the financial institution. It may also disclose to any other person if the disclosure would be lawful if made by the financial institution. The third party's affiliates may disclose and use the information to the same extent permissible for the third party.

In cases where an entity receives information outside of one of the section 502(e) exceptions, that entity will in essence ''step into the shoes'' of the financial institution that made the initial disclosures. Thus, if the financial institution made the initial disclosures after representing to its consumers that it had carefully screened the entities to whom it intended to disclose the information, the receiving entity must comply with those representations. Otherwise, the subsequent disclosure by the receiving entity would not be in accordance with the notices given to consumers and would not, therefore, be lawful. Even if such representations do not prevent the recipient from redisclosing the information, the recipient's ability to redisclose will be limited by whatever opt out instructions were given to the institution making the initial disclosures and by whatever new opt out instructions that are given after the initial disclosure. The receiving entity, therefore, must have procedures in place to continually monitor the status of who opts out and to what extent. Given these practical limitations on the ability of a recipient to disclose pursuant to another institution's privacy and opt out notices, redisclosure of information is most likely to arise under one of the section 502(e) exceptions (as implemented by §§ __.14 and __.15 of the final rule).

Monitoring Third Parties

The Agencies have decided not to amend their respective rules to impose a specific duty on financial institutions to monitor third parties' use of nonpublic personal information provided by the institutions. This does not address whether obligations to do so may arise in other contexts. The Agencies note, for instance, that most of the commenters who requested that the Agencies not impose such a duty stated that they have contracts in place that limit what the recipient may do with the information. The Agencies also note that the limits on reuse as stated in the final rule provide a basis for an action to be brought against an entity that violates those limits.

Section __.12 Limits on Sharing Account Number Information for Marketing Purposes

Section 502(d) of the GLB Act prohibits a financial institution from disclosing, ''other than to a consumer reporting agency, an account number or similar form of access number or access code for a credit card account, deposit account, or transaction account of a consumer to any nonaffiliated third party for use in telemarketing, direct mail marketing, or other marketing through electronic mail to the consumer.'' Proposed § __.13 applied this statutory prohibition to disclosures made directly or indirectly by a financial institution, and sought comment on whether one or more exceptions to the flat prohibition should be created.

The Agencies received comments from people who suggested that various exceptions be created as well as from people who believe that a flat prohibition is necessary to protect consumers from unscrupulous practices. After considering the suggestions from all of the commenters addressing this issue, the Agencies have decided to amend proposed § __.13 by (a) adding two exceptions that the Agencies believe are necessary for financial institutions to engage in legitimate, routine business practices and that are unlikely to pose a significant potential for abuse and (b) clarifying that the prohibition does not apply in two circumstances frequently mentioned in the comments. These exceptions and clarifications are discussed below.

Disclosures to a Financial Institution's Agent or Service Provider

Many financial institutions noted that they use agents or service providers to conduct marketing on the institution's behalf. This might occur, for instance, when an insured depository institution instructs a service provider that assists in the delivery of monthly statements to include a ''statement stuffer'' with the statement informing consumers about a financial product or service offered by the institution. The Agencies recognize the need to disclose account numbers in this instance, and believe that there is little risk to the consumer presented by such disclosure.

Similarly, the Agencies recognize that a financial institution may use agents to market the institution's own financial products and services. Commenters advocating that the final rule exclude disclosures to agents stated that the agents effectively act as the financial institution in the marketing of the institution's financial products and services. These commenters suggested that there was no more reason to preclude sharing the account numbers with an agent hired to market the institution's financial products and services than there would be to preclude sharing between two departments of the same institution. The Agencies are concerned, however, about the possibility of transactions being consummated by a financial institution's agent who may be engaging in practices contrary to the institution's instructions. While the Agencies recognize that a financial institution frequently will use agents to assist it in marketing its products, the Agencies believe that a consumer's protections are potentially eroded by allowing agents to have access to a consumer's account. Accordingly, the Agencies have added an exception in § __.12(b)(1) that would permit disclosures of account numbers by a financial institution to an agent for the purpose of marketing the financial institution's financial product or services, but have qualified that exception by requiring

that the agent have no authority to initiate charges to the account.

Private Label Credit Cards and Affinity Programs

Many commenters stated that the final rule should not prevent the disclosure of account numbers in the situation where a consumer chooses to participate in a private label credit card program or other affinity program. Under these programs, a consumer typically will be offered certain benefits, often by a retail merchant, in return for using a credit card that is issued by a particular financial institution. The commenters suggested that, in the example of an affinity program, the consumer understands the need for the merchant and financial institution to share the consumer's account number. The Agencies agree that this type of disclosure is appropriate and does not create a significant risk to the consumer. Accordingly, § __.12(b)(2) has been added to the final rule to exclude the sharing of account numbers where the participants are identified to the consumer at the time the consumer enters into the program.

Encrypted Numbers

Many commenters urged the Agencies to exercise their exemptive authority to permit the transmission of account numbers in encrypted form. Several commenters noted that encrypted account numbers and other internal identifiers of an account are frequently used to ensure that a consumer's instructions are properly executed, and that the inability to continue using these internal identifiers would increase the likelihood of errors in processing a consumer's instructions. These commenters also point out that if internal identifiers may not be used, a consumer would need to provide an account number in order to ensure proper handling of a request, which would expose the consumer to a greater risk than would the use of an internal tracking system that preserves the confidentiality of a number that may be used to access the account.

The Agencies believe an encrypted account number without the key is something different from the number itself and thus falls outside the prohibition in section 502(d). In essence, it operates as an identifier attached to an account for internal tracking purposes only. The statute, by contrast, focuses on numbers that provide *access* to an account. Without the key to decrypt an account number, an encrypted number does not permit someone to access an account.

In light of the statutory focus on access numbers, and given the demonstrated need to be able to identify which account a financial institution should debit or credit in connection with a transaction, the Agencies have included a clarification in § __.12(c)(1) of the final rule stating that an account number, or similar form of access number or access code, does not include a number or code in an encrypted number form, as long as the financial institution does not provide the recipient with the means to decrypt the number. The Agencies believe that consumers will be adequately protected by disclosures of encrypted account numbers that do not enable the recipient to access the consumer's account.

Definition of ''Transaction Account''

Several commenters suggested that the final rule clarify that accounts to which no charge may be posted are not covered by the prohibition against disclosing account numbers. These commenters frequently cited mortgage loan accounts as typical of those that should fall outside the scope of the prohibition. The Agencies agree with the principle behind these suggestions. However, the Agencies note that there have been instances in which a borrower's monthly payments on a mortgage loan have been increased in connection with the marketing of a financial product or service without the borrower's knowledge or permission. Accordingly, the final rule clarifies, in § __.12(c)(2), that a transaction account is an account other than a deposit account or a credit card account, and does not include an account to which third parties cannot initiate charges. If it would be possible, for instance, for a third party marketer to initiate a charge to a mortgage loan account, then the final rule would prohibit the disclosure of that account number to the marketer.

Section __.13 Exception to Opt Out Requirements for Service Providers and Joint Marketing

Section 502(b) of the GLB Act creates an exception to the opt out rules for the disclosure of information to a nonaffiliated third party for use by the third party to perform services for, or functions on behalf of, the financial institution, including the marketing of the financial institution's own products or services or financial products or services offered pursuant to a joint agreement between two or more financial institutions. A consumer will not have the right to opt out of disclosing nonpublic personal information about the consumer to nonaffiliated third parties under these circumstances, if the financial institution ''fully discloses'' to the consumer that it will provide this information to the nonaffiliated third party before the information is shared and enters into a contract with the third party that requires the third party to maintain the confidentiality of the information. As noted in the proposed rule, this contract should be designed to ensure that the third party (a) will maintain the confidentiality of the information at least to the same extent as is required for the financial institution that discloses it, and (b) will use the information solely for the purposes for which the information is disclosed or as otherwise permitted by §§ __.10 and __.11 of the proposed rules.

The majority of the comments on this exception expressed concern that routine servicing agreements between a financial institution and, for instance, a loan servicer would be subject to the requirements of proposed § __.9 (§ __.13 in the final rule). These commenters consistently pointed out that section 502(e) of the GLB Act contains several exceptions for the sharing of information by a financial institution that is necessary to permit a third party to perform services for a financial institution. The commenters requested clarification that disclosures made pursuant to one of the section 502(e) exceptions are not subject to the requirements imposed on disclosures made pursuant to section 502(b)(2) of the GLB Act. The Agencies agree that when a disclosure may be made under section 502(e), the statute permits that disclosure without the financial institution first complying with the requirements imposed by section 502(b)(2).

A related issue is whether a financial institution must satisfy the disclosure obligations of section 502(b)(2) and have a confidentiality agreement in the case of a service provider that is performing an activity governed by section 502(b)(2) (*i.e.,* those that are not covered by one of the section 502(e) exceptions). Several commenters maintained that it is illogical to impose a set of requirements on disclosures to the section 502(b)(2) service providers when no such requirements are imposed on the section 502(e) service providers. The Agencies believe, however, that a plain reading of section 502(b)(2) leads to that result.[12] The Agencies read the phrase

[12] The statute states, in relevant part, that section 502(b) ''* * shall not prevent a financial institution from providing nonpublic personal information to a nonaffiliated third party to perform services for or functions on behalf of the financial institution, including the marketing of the financial institution's own products or services, or financial

''if the financial institution fully discloses * * *'' as used in section 502(b)(2) as modifying the phrase ''This subsection shall not prevent a financial institution from providing nonpublic personal information to a nonaffiliated third party to perform services for or functions on behalf of the financial institution, * * *'' The Agencies thus have concluded that any disclosure to a service provider not covered by section 502(e) must satisfy the disclosure and written contract requirements of section 502(b)(2).

Several other commenters addressed the question of whether the rule should include safeguards beyond those provided by the statute to protect a financial institution from the risks that can arise from agreements with third parties. Most suggested that safety and soundness concerns were more appropriately addressed in a forum other than a rule designed to protect consumers' financial privacy. Others opined that financial institutions did not need the rule to mandate certain protections on their behalf. The Agencies have concluded that the protections set out in the statute, as implemented by § __.13(a)(1), are adequate for purposes of the privacy rule. Those protections require a financial institution to provide the initial notice required by § __.4 of the final rule as well as enter into a contractual agreement with a third party that prohibits the third party from disclosing or using the information other than to carry out the purposes for which the bank disclosed the information, including use under an exception in §§ __.14 or __.15 in the ordinary course of business to carry out those purposes. These limitations will preclude recipients from sharing a consumer's nonpublic personal information pursuant to a chain of third party joint marketing agreements.

Several commenters asked whether a financial institution would have to modify existing contracts with third parties to comply with the rule. The Agencies believe that a balance must be struck that minimizes interference with existing contracts while preventing evasions of the regulation. To achieve these goals, the final rule states, in § __.18(c), that contracts entered into on or before July 1, 2000 must be brought into compliance with the provisions of § __.13 by July 1, 2002.

For the reasons expressed above, the Agencies have adopted, in § __.13 of the final rule, the provisions that were set out in § __.9 of the proposal with the changes noted above. The Agencies note that financial institutions should remain vigilant in their efforts to ensure that agreements they enter into with third parties do not expose the institutions to undue risks. These risks are particularly prevalent in arrangements whereby a financial institution endorses or sponsors a financial product or service offered by the third party.

Section __.14 Exceptions to Notice and Opt Out Requirements for Processing and Servicing Transactions

As previously discussed, section 502(e) of the GLB Act creates exceptions to the requirements that apply to the disclosure of nonpublic personal information to nonaffiliated third parties. Paragraph (1) of that section sets out certain exceptions for disclosures made, generally speaking, in connection with the administration, processing, servicing, and sale of a consumer's account. Proposed § __.10 implemented those exceptions by restating them with only stylistic changes that were intended to make the exceptions easier to read. The preamble to that proposed section noted that the exceptions set out in proposed § __.10 (as well as the exceptions set out in § __.11 of the proposal) do not affect a financial institution's obligation to provide initial notices of its privacy policies and practices prior to the time it establishes a customer relationship and annual notices thereafter.

The Agencies received several comments from institutions pointing out that, by deleting the statutory phrase ''in connection with'' from the exceptions for information shared (a) to service or process a financial product or service requested by the consumer or (b) to maintain or service a customer account, the Agencies narrowed the application of the exception. The Agencies did not intend this result, and have changed the final rule accordingly. See § __.14(a).

Several other commenters requested that the final rule specifically state that certain services, such as those provided by attorneys, appraisers, and debt collectors (as appropriate), are ''necessary'' to effect, administer, or enforce a transaction, as that term is used in paragraph (a) and defined in paragraph (b) of proposed § __.10. Others cited examples of entities seeking to verify funds availability or obtain loan payoff information as instances where a disclosure would fall within the exceptions described in proposed § __.10. The Agencies believe that disclosures to these types of professionals and under the circumstances posited by the commenters may be necessary to effect, administer, or enforce a transaction in a given situation. However, the Agencies have not listed specific types of disclosures in the regulation as necessarily falling within the scope of the exception because they are concerned that a general statement could be applied inappropriately to shelter disclosures that, in fact, are not necessary to effect, administer, or enforce a transaction.

Other commenters suggested that the final rule clarify, in situations where a financial institution uses an agent to provide services to a consumer, that the consumer need not have directly requested or authorized the service provider to provide the financial product or service but may request it from the principal instead. The Agencies agree that the communication may be between the consumer and the service provider, and note that the rule governing agents as set out in the definition of ''consumer,'' above, provides the flexibility sought by the commenters. Briefly stated, an individual will not be a consumer of an entity that is acting as agent for another financial institution in connection with that financial institution's providing a financial product or service to the consumer.

Section __.15 Other Exceptions to Notice and Opt Out Requirements

As noted above, section 502(e) contains several exceptions to the requirements that otherwise would apply to the disclosures of nonpublic personal information to nonaffiliated third parties. Proposed § __.11 set out those exceptions for disclosures that are not made in connection with the administration, processing, servicing, and sale of a consumer's account, and made stylistic changes to the statutory language intended to clarify the exceptions. The proposal also provided an example of the consent exception in the context of a financial institution that has received an application from a consumer for a mortgage loan informing a nonaffiliated insurance company that the consumer has applied for a loan. The Agencies invited comment on whether safeguards should be added to the exception for consent in order to minimize the potential for consumer confusion.

Several commenters responded to the request for comment on whether the consent exception should include

products or services offered pursuant to joint agreements between two or more financial institutions that comply with the requirements imposed by the regulations prescribed under section 504, if the financial institution fully discloses the providing of such information and enters into a contractual agreement with the third party that requires the third party to maintain the confidentiality of such information.''

safeguards, such as a requirement that the consent be written, be indicated by a signature on a separate line, or automatically terminate after a certain period of time. Of these, some favored the additional safeguards discussed in the proposal, while others maintained that safeguards are unnecessary. Several suggested that the consent exception include a provision noting that participation in a program where a consumer receives ''bundled'' products and services (such as would be the case, for instance, in an affinity program) necessarily implies consent to the disclosure of information between the entities that provide the bundled products or services. Others suggested that certain terms and conditions be imposed on any consent agreement, such as a time by which the financial institution must stop disclosing nonpublic personal information once a consent is revoked.

The Agencies have declined to elaborate on the requirements for obtaining consent or the consumer safeguards that should be in place when a consumer consents. The Agencies believe that the resolution of this issue is appropriately left to the particular circumstances of a given transaction. The Agencies note that any financial institution that obtains the consent of a consumer to disclose nonpublic personal information should take steps to ensure that the limits of the consent are well understood by both the financial institution and the consumer. If misunderstandings arise, consumers may have means of redress, such as in situations when a financial institution obtains consent through a deceptive or fraudulent practice. Moreover, a consumer may always revoke his or her consent. In light of the safeguards already in place, the Agencies have decided not to add safeguards to the consent exception.

Many commenters offered specific suggestions for additional exceptions or amendments to the proposed exceptions. In many cases, the suggestions are accommodated elsewhere in the regulation (such as is the case, for instance, for exceptions to permit (a) verification of available funds or (b) disclosures to or by appraisers, flood insurers, attorneys, insurance agents, or mortgage brokers to effect a transaction). In other cases, the suggestions are inconsistent with the statute (as is the case, for instance, with one commenter's suggestion that the Agencies completely exempt a financial institution from all of the statute's requirements if the institution makes no disclosures other than what is permitted by section 502(e)). While the Agencies recognize the merits of many of the remaining suggestions, they believe that the volume and complexity of these suggestions exceed what is appropriate in a regulation. Accordingly, the Agencies have retained, in § __.15, the statement of the exceptions as proposed and invite interested parties to pursue with the Agencies clarifications as necessary in their particular circumstance.

Section __.16 Protection of Fair Credit Reporting Act

Section 506 of the GLB Act makes several amendments to the FCRA to vest rulemaking authority in various agencies and to restore the Agencies' regular examination authority. Paragraph (c) of section 506 states that, except for the amendments noted regarding rulemaking authority, nothing in Title V of the GLB Act is to be construed to modify, limit, or supersede the operation of the FCRA, and no inference is to be drawn on the basis of the provisions of Title V whether information is transaction or experience information under section 603 of the FCRA. Proposed § __.14 implemented section 506(c) of the GLB Act by restating the statute, making only minor stylistic changes intended to make the rule clearer.

Comments about this provision focused on whether the Agencies, by requiring annual notice of a consumer's right to opt out under the FCRA, were modifying, limiting, or superseding the operation of the FCRA. For the reasons explained in the discussion of § __.6, above, the Agencies do not believe that the annual disclosure mandated by the GLB Act affects in any way the obligations imposed by the FCRA.

The Agencies received no other comment on this section, and, therefore, adopt the text set out in § __.14 of the proposal. See §__.16.

Section __.17 Relation to State Laws

Section 507 of the GLB Act states, in essence, that Title V does not preempt any State law that provides greater protections than are provided by Title V. Determinations of whether a State law or Title V provides greater protections are to be made by the Federal Trade Commission (FTC) after consultation with the agency that regulates either the party filing a complaint or the financial institution about whom the complaint was filed, and may be initiated by any interested party or on the FTC's own motion. Proposed § __.15 essentially restated section 507, noting that the proposed rules (as opposed to the statute) do not preempt State laws that provide greater protection for consumers than do the rules.

Comments on this section ranged from those who suggested that federal law should preempt state law in every case where there is a conflict to those who encouraged the Agencies to support the rights of states to enact greater protections. Some requested clarification of whether a particular state law would be considered more restrictive, while others suggested that the Agencies establish in the final rule a choice of law principle for financial institutions operating in more than one state. The Agencies believe that these and other suggestions made by the commenters exceed the scope of this rulemaking and are better addressed, to the extent the Agencies have authority to address them, in other forums. Accordingly, the Agencies have adopted the text set out in proposed § __.15. See § __.17 of the final rule.

Section __.18 Effective Date; Transition Rule

Section 510 of the GLB Act states that, as a general rule, the relevant provisions of Title V take effect 6 months after the date on which rules are required to be prescribed, *i.e.*, November 12, 2000. However, section 510(1) authorizes the Agencies to prescribe a later date in the rules enacted pursuant to section 504. The proposed rule sought comment on the effective date prescribed by the statute. It also would have required that financial institutions provide initial notices, within 30 days of the effective date of the final rule, to people who were customers as of the effective date. The preamble to the proposed rule noted that a financial institution would have to provide opt out notices before the rule's effective date if the institution wanted to continue sharing nonpublic personal information with nonaffiliated third parties without interruption.

The overwhelming majority of commenters addressing this provision requested additional time to comply with the final rule. Commenters stated that six months would not be sufficient to take the steps needed to comply with the regulation, including preparing new disclosure forms, developing software needed to track opt outs, training employees, creating management oversight systems, and undergoing internal examination and auditing to ensure compliance. Several commenters suggested that it would be less effective and potentially more confusing for consumers to receive several notices all around the end of the year 2000 than it would be for the notices to be delivered during a rolling phase-in. Others noted that the proposed effective date would

place a severe strain on financial institutions at a time when other year-end notices need to be prepared and delivered. Several commenters noted that financial institutions have not budgeted for the expenses in the current year that likely will be incurred. They also noted that the disclosures regarding the standards to be followed to protect customers' records have not been proposed for comment, thereby making it impossible for financial institutions to know how to prepare at least that part of the initial privacy notices. Requests for extensions of the effective date typically ranged from 12 months to 24 months from the date the final rules are published.

Many commenters also stated that a 30-day phase-in for initial notices to existing customers is not feasible, given the large number of notices, the short period of time allowed, and the competing demands on financial institutions at the time when the initial notices must be sent. A few suggested that the rule require initial notices to be sent only to people who establish customer relationships after the effective date of the rule, and allow a financial institution to send annual notices to existing customers at some point during the next 12 months and annually thereafter.

The Agencies agree that six months may be insufficient in certain instances for a financial institution to have ensured that its forms, systems, and procedures comply with the rule. In order to accommodate situations requiring additional time, the Agencies have retained the effective date of November 13, but, consistent with their authority under section 510(1) of the GLB Act to extend the effective date, the Agencies will give financial institutions until July 1, 2001 to be in full compliance with the regulation. Financial institutions are expected, however, to begin compliance efforts promptly, to use the period prior to June 30, 2001, to implement and test their systems, and to be in full compliance by July 1, 2001. Given that this provides financial institutions with slightly over 13 months in which to comply with the rule, the Agencies have determined that there no longer is any need for a separate phase-in for providing initial notices. Thus, a financial institution will need to deliver all required opt out notices and initial notices before July 1, 2001.

Financial institutions are encouraged to provide disclosures as soon as practicable. Institutions that do not disclose nonpublic personal information to third parties have fewer burdens under the regulation (both in terms of the notice requirements and opt out mechanism) and should therefore be able to provide privacy notices to their consumers more expeditiously. Depending on the readiness of an institution to process opt out elections, institutions might wish to consider including the privacy and opt out notices in the same mailing as is used to provide tax information to consumers in the first quarter of 2001 to increase the likelihood that a consumer will not mistake the notices for an unwanted solicitation. The Agencies believe that this extension represents a fair balance between those seeking prompt implementation of the protections afforded by the statute and those concerned about the reliability of the systems that are put in place.

The Agencies have concluded that the extension of the date by which financial institutions must be in full compliance provides much of the relief sought by those who suggested that initial notices should not be required for existing customers. By allowing financial institutions to deliver notices over a significantly longer period of time than was proposed, the concentrated burden that would have been imposed by the proposed rule is avoided. Accordingly, the Agencies have decided not to adopt the suggestion that initial notices be required only for new customers after the effective date of the rule.

Initial notices need not be given to customers whose relationships have terminated prior to the date by which institutions must be in compliance with the rule. Thus, if an account is inactive according to a financial institution's policies before July 1, 2001, then no initial notice would be required in connection with that account. However, because these former customers would remain consumers, a financial institution would have to provide a privacy and opt out notice to them if the financial institution intended to disclose their nonpublic personal information to nonaffiliated third parties beyond the exceptions in §§ __.14 and __.15.

The Agencies note that full compliance with the rule's restrictions on disclosures is required on July 1, 2001. To be in full compliance, institutions must have provided their existing customers with a privacy notice, an opt out notice, and a reasonable amount of time to opt out prior to that date. If these have not been provided, the disclosure restrictions will apply. This means that an institution would have to cease sharing customers' nonpublic personal information with nonaffiliated third parties on that date, unless it may share the information pursuant to an exception under §§ __.14 or __.15. Financial institutions that both provide the required notices and allow a reasonable period of time to opt out before July 1, 2001, may continue to share nonpublic personal information after that date for customers who do not opt out.

Appendix A—Sample Clauses

In order to provide additional guidance to financial institutions concerning the level of detail the Agencies believe is appropriate under the statute, the Agencies have prepared a variety of sample clauses for financial institutions to consider. The Agencies urge financial institutions to carefully review whether these clauses accurately reflect a given institution's policies and practices before using the clauses. Financial institutions are free to use different language and to include additional detail as they think is appropriate in their notices.

Derivation Chart

Below is a chart showing the derivation of the sections in the final privacy rule from the proposal. Only changes are noted.

Proposal	Content of provision	Final rule
4(d)	How to provide initial notice	9(a)
N/A	New product for existing customer	4(d)
4(d)(3)	Oral delivery	9(d)
4(d)(4)	Retainable notice	9(e)
N/A	Joint relationships (privacy notice)	9(g)
5(b)	How to provide annual notice	9(a)
5(b)	Actual notice of annual notice	9(c)
5(c)	Terminated customer relationships	5(b)
N/A	Delivering short-form initial notices	6(d)
7	Main operative provision	10

Proposal	Content of provision	Final rule
8(a)	Opt out methods and opt out notice content	7(a)
8(b)(1)	How to deliver opt out notices	9(a)
8(b)(2)	Oral delivery	9(d)
8(b)(3)	Same form as initial notice	7(b)
8(b)(4)	Initial notice must accompany opt out notice	7(c)
N/A	Joint relationships (opt out notice)	7(d)
8(d)	Time to comply with opt out; continuing right to opt out	7(e) & (f)
8(e)	Duration of opt out	7(g)
8(c)(1)	Revised notices	8(a)
8(c)(2)	How to deliver revised notice	8(c)
8(c)(3)	Examples of when revised notice is required	8(b)
9	Exception for service providers and joint marketers	13
10	Exceptions for processing and servicing transactions	14
11	Other exceptions	15
12	Redisclosure and reuse	11
13	Sharing account number information	12
14	FCRA	16
15	State law	17
16	Effective date	18

IV. Guidance for Certain Institutions

To minimize the burden and costs to a financial institution (''you'') and generally clarify the operation of the final rule, the Agencies have included this guidance that you may use in conjunction with the sample clauses in Appendix A. This guidance specifically applies to you if you:

(1) Do not have any affiliates;

(2) Only disclose nonpublic personal information to nonaffiliated third parties in accordance with an exception under §§ __.14 or __.15, such as in connection with servicing or processing a financial product or service that a consumer requests or authorizes; and

(3) Do not reserve the right to disclose nonpublic personal information to nonaffiliated third parties, except under §§ __.14 and __.15.[13]

In addition, if you disclose nonpublic personal information in accordance with the exception in § __.13, for service providers and joint marketers, you also must include an accurate description of that information, as illustrated by the sample clause in section (K) below.

In general, if you disclose nonpublic personal information to nonaffiliated third parties only as authorized under an exception, then your only responsibilities under the regulation are to provide initial and annual notices to each of your customers. You do not need to provide an opt out notice or opt out rights to your customers.

[13] If you disclose or reserve the right to disclose nonpublic personal information to a nonaffiliated third party under other circumstances, you must comply with other provisions in the rule, notably §§ __.7, __.8, and __.13, if applicable. If you disclose or reserve the right to disclose nonpublic personal information to an affiliate you must comply with other provisions in the rule, notably § __.6(a)(7), as applicable.

A. Initial Notice to Customers

You must provide an initial notice to each of your customers. A customer is a natural person who has a continuing relationship with you, as described in § __.4(c). For instance, an individual who opens a credit card or checking account with you is your customer. By contrast, an individual who uses your ATM to withdraw funds from a checking account at *another* financial institution is not your customer. Even if an individual repeatedly uses your ATM that individual is not your customer. In other words, you must provide initial and annual notices to each of your customers, but not to others.

B. Time to Provide Initial Notice

You must provide an initial privacy notice to each of your customers not later than when you establish a customer relationship (§ __.4(a)(1)). For instance, you must provide a privacy notice to an individual not later than when that individual executes the contract to open a checking account. Thus, you can provide the notice to a checking account customer together with the account agreement and signature card.

Similarly, in the case of a loan, you must provide a privacy notice to an individual not later than when that individual executes the loan contract. For example, you can provide the notice to an individual together with the documents (or other forms) that constitute the loan contract. You may always deliver your privacy notices earlier than required.

If one of your existing customers obtains a new financial product or service from you, then you need not provide another initial notice to that customer (§ __.4(d)) if that earlier notice covered the subsequent product.

For instance, if Alison Individual walks into Bank for the first time on July 2, 2001, to open a checking account, then Bank complies with § __.4(a)(1) of the rule if it provides an initial notice to Alison together with the deposit contract. When Alison opens her checking account, she becomes a customer of Bank. Alison maintains her checking account and, six months later, returns to Bank to obtain a loan. If the initial notice that Bank provided to Alison was accurate with respect to that loan, then Bank need not provide another initial notice to her when she obtains the loan because it has provided a notice to Alison that covered the loan when she opened her checking account.

C. Method of Providing the Initial Notice

You must provide your initial notice so that each customer can reasonably be expected to receive actual notice of it, in writing (§ __.9(a)). For example, you may provide the initial notice by mailing a printed copy of it together with a loan contract. Similarly, you may provide the initial notice by hand-delivering a printed copy of it to the customer together with a deposit account agreement.

D. Compliance With Initial Notice Requirement for Existing Customers by Effective Date

You must provide an initial notice to each of your current customers not later than July 1, 2001 (§ __.18(b)). You may do so by mailing a printed copy of the notice to the customer's last known address.

E. Annual Notice

During the continuation of the customer relationship, you must provide an annual notice to the customer, as described in § __.5(a). You

must provide an annual notice to each customer at least once in any period of 12 consecutive months during which the customer relationship exists. You may define the 12-consecutive-month period, but must consistently apply that period to the customer. You may define the 12-consecutive-month period as a calendar year and provide the annual notice to the customer once in each calendar year following the calendar year in which you provided the initial notice.

For example, assume that Bank defines the 12-consecutive-month period as a calendar year and provides annual notices to all of its customers on October 1 of each year. If Alison Individual opens a checking account with a Bank on July 2, 2001, thereby becoming a customer, then Bank must provide an initial notice to Alison together with the deposit agreement or earlier. Bank must provide an annual notice to Alison by December 31, 2002. If Bank provides an annual notice to Alison on October 1, 2002, as it does for other customers, then it must provide the next annual notice to Alison not later than October 1, 2003.

F. Method of Providing the Annual Notice

Like the initial notice, you must provide the annual notice so that each customer can reasonably be expected to receive actual notice of it, in writing (§ __.9(a)). You may do so by mailing a printed copy of the notice to the customer's last known address.

G. Joint Accounts

If two or more customers jointly obtain a financial product or service, then you may provide one initial notice to those customers jointly. Similarly, you may provide one annual notice to those customers jointly (§ __.9(g)).

H. Information Described in the Initial and Annual Notices

The initial and annual notices must include an accurate description of the following four items of information:

1. The categories of nonpublic personal information that you collect (§ __.6(a)(1));

2. The fact that you do not disclose nonpublic personal information about your current and former customers to affiliates or nonaffiliated third parties, except as authorized by §§ __.14 and __.15 (§ __.6(a)(2)–(4)). When describing the categories with respect to those parties, you are required to state only that you make disclosures to other nonaffiliated third parties as permitted by law (§ __.6(c));

3. Your policies and practices with respect to protecting the confidentiality and security of nonpublic personal information (§ __.6(a)(8)).

For each of these items of information above, you may use a sample clause from Appendix A. The Agencies emphasize that you may use a sample clause only if that clause accurately describes your actual policies and practices.

I. Example of Notice

A financial institution (''Bank'') that (i) does not have any affiliates and (ii) only discloses nonpublic personal information to nonaffiliated third parties as authorized under §§ __.14 and __.15, may comply with the requirements of § __.6 of the rule by using the following notice, if applicable.

Bank collects nonpublic personal information about you from the following sources:

- *Information we receive from you on applications or other forms;*
- *Information about your transactions with us or others; and*
- *Information we receive from a consumer reporting agency.*[14]

We do not disclose any nonpublic personal information about you to anyone, except as permitted by law.

If you decide to close your account(s) or become an inactive customer, we will adhere to the privacy policies and practices as described in this notice.

Bank restricts access to your personal and account information to those employees who need to know that information to provide products or services to you. Bank maintains physical, electronic, and procedural safeguards that comply with federal standards to guard your nonpublic personal information.

J. Initial and Annual Notices Must Be Clear and Conspicuous

The Agencies emphasize that you must ensure that both the initial and annual notices are clear and conspicuous, as defined in § __.3(b).

K. Example of Notice for Disclosure to Service Providers and Joint Marketers

If you disclose nonpublic personal information in accordance with the exception in §__.13, for service providers and joint marketers, you also must include an accurate description of that information. You may comply with the requirements of __.13 of the rule by including the following sample clause, if applicable, in the example of notice described in section (I) above:

We may disclose all of the information we collect, as described [describe location in the notice, such as ''above'' or ''below''] to companies that perform marketing services on our behalf or to other financial institutions with whom we have joint marketing agreements.

V. Regulatory Analysis

A. Paperwork Reduction Act

The Agencies may not conduct or sponsor, and an organization is not required to respond to, an information collection unless it displays a currently valid Office of Management and Budget (OMB) control number. The OMB control numbers are listed below.

OCC: 1557–0216.
Board: 7100–0294.
FDIC: 3064–0136.
OTS: 1550–0103.

The Agencies sought comment on the burden estimates for the information collections listed below. Many commenters suggested, in response to specific proposed sections, that the rule would impose significant burden on them. Most of those suggestions concerned requirements that are imposed by the statute (such as the need to provide annual notices if an institution's previous notice remains accurate or the need to provide any notices at all in situations where an institution does not disclose nonpublic personal information to nonaffiliated third parties). The Agencies have attempted to address other concerns by amending several provisions as discussed above and by clarifying the Agencies' expectations as far as disclosures are concerned. Below is a brief summary of the remaining paperwork burdens implemented by this final rule.

The final rule contains several disclosure requirements. The respondents must prepare and provide the initial notice to all current customers and all new customers not later than when a respondent establishes a customer relationship (§__.4(a)). Subsequently, an annual notice must be provided to all customers at least once during a twelve-month period during the continuation of the customer relationship (§__.5(a)). The opt out notice (and partial opt out notice, if applicable; see §__.10(c)) must be provided prior to disclosing nonpublic personal information to certain nonaffiliated third parties. If a financial institution wishes to disclose information in a way that is inconsistent with the notices previously given to a

[14] You need to describe only those general categories that apply to your policies and practices. Accordingly, if you do not collect information from ''a consumer reporting agency,'' for instance, then you need not describe that category in your notices.

consumer, the institution must provide consumers with revised notices (§__.8(a)).

The final regulation also contains affirmative actions that consumers must take to exercise their rights. In order for consumers to prevent financial institutions from sharing their information with nonaffiliated third parties, they must opt out (§§__.7(a)(2)(ii)), __.10(a)(2) and __.10(c)). At any time during their continued relationship with the institution, consumers have the right to change or update their opt out status with the institution (§§__.7(f) and (g)).

OCC: The rule requires the collection of certain information from national banks, District of Columbia banks, and Federal branches and agencies of foreign banks. OMB has reviewed and approved the collections of information contained in the final rule under control number 1557–0216, in accordance with the Paperwork Reduction Act of 1995 (PRA) (44 U.S.C. 3501 *et seq.*). OMB clearance will expire on March 31, 2003. There are 2,400 respondents with a total annual burden of 108,000 hours.

Board: The rule requires the collection of certain information from state member banks, bank holding companies, affiliates and certain non-bank subsidiaries of bank holding companies, uninsured state agencies and branches of foreign banks, commercial lending companies owned or controlled by foreign banks, and Edge and agreement corporations. In accordance with the Paperwork Reduction Act of 1995 (44 U.S.C. 3506; 5 CFR 1320 Appendix A.1), the Board approved the rule under the authority delegated to the Board by OMB. The OMB control number is 7100–0294. There are 9,500 respondents with a total annual burden of 427,500 hours.

FDIC: The rule requires the collection of certain information from insured nonmember banks, insured state branches of foreign banks, and certain subsidiaries of these entities. The Office of Management and Budget (OMB) has reviewed and approved the collections of information contained in the final rule under control number 3064–0136, in accordance with the Paperwork Reduction Act of 1995 (PRA) (44 U.S.C. 3501 *et seq.*). OMB clearance will expire on April 30, 2003. There are 5,764 respondents with a total annual burden of 259,380 hours.

OTS: The rule requires the collection of certain information from savings associations and certain of their subsidiaries. OMB has reviewed and approved the collections of information contained in the final rule under control number 1550–0103, in accordance with the Paperwork Reduction Act of 1995 (PRA) (44 U.S.C. 3501 *et seq.*). OMB clearance will expire on April 30, 2003. There are 1,104 respondents with a total annual burden of 49,680 hours.

The Agencies have a continuing interest in the public's opinion regarding collections of information. Members of the public may submit comments, at any time, regarding any aspect of these collections of information. Comments may be sent to:

OCC: Communications Division, Attention: 1557–0216, Office of the Comptroller of the Currency, 250 E Street, SW, Third Floor, Washington, DC 20219.

Board: Mary M. West, Federal Reserve Board Clearance Officer, Mail Stop 97, Division of Research and Statistics, Board of Governors of the Federal Reserve System, Washington, D.C. 20551.

FDIC: Steven F. Hanft, Assistant Executive Secretary (Regulatory Analysis), Federal Deposit Insurance Corporation, Room F–4080, 550 17th Street NW., Washington, DC 20429.

OTS: Dissemination Branch (1550–0103), Office of Thrift Supervision, 1700 G Street, NW., Washington, DC 20552.

A copy of all comments should also be sent to Office of Management and Budget, Paperwork Reduction Project (include OMB control number), Washington, D.C. 20503.

B. Regulatory Flexibility Act

OCC: Under the Regulatory Flexibility Act (RFA), the OCC must either provide a Final Regulatory Flexibility Analysis (FRFA) with a final rule or certify that the final rule ''will not, if promulgated,'' have a significant economic impact on a substantial number of small entities.[15] Given that the burden imposed on small institutions stems in large part from the statute, and in light of the significant number of changes described previously that reduce the rule's burden on financial institutions of all sizes, the OCC does not expect that the rule will have a significant economic impact on a substantial number of small entities. However, because the statute creates a set of requirements that are new both to the OCC and to financial institutions in general, the OCC has prepared the following FRFA and intends to publish a compliance guide for small entities.

[15] The RFA defines the term ''small entity'' in 5 U.S.C. 601 by reference to definitions published by the Small Business Administration (SBA). The SBA has defined a ''small entity'' for banking purposes as a national or commercial bank, savings institution or credit union with less than $100 million in assets. See 13 CFR 121.201.

Need for and Objectives of the Final Rule; Legal Basis for the Rule

The final rule implements the provisions of Title V, Subtitle A of the GLB Act addressing consumer privacy. In general, these statutory provisions require banks to provide notice to consumers about a bank's privacy policies and practices, restricts institutions from sharing nonpublic personal information about consumers to nonaffiliated third parties, and permits consumers to prevent institutions from disclosing nonpublic personal information about them to certain non-affiliated third parties by ''opting out'' of that disclosure.

Section 504 of the GLB Act authorizes the OCC to prescribe ''such regulations as may be necessary'' to carry out the purposes of Title V, Subtitle A. If no regulations were promulgated, substantive burdens imposed by the Act (*e.g.,* the notice, information sharing restrictions, and opt out requirements) would have become effective and binding on banks one year from the date the Act was signed into law. The OCC believes that a regulatory promulgation gives the private sector greater certainty about how to comply with the statute and clearer guidance regarding how it will be enforced.

Small Entities to Which the Rule Will Apply

The proposed rule would apply to all banks, regardless of size, including those with assets of under $100 million. As of December 1999, 1203 (of 2365 total) national banks had assets of under $100 million. As explained below, Title V, Subtitle A of the GLB Act did not provide a general exception for small banks, nor did it appear that such an exception would be consistent with the purposes of the Act.

Compliance Requirements and Effects of the Final Rule on Small Entities

A detailed description of the final rule's requirements is set forth above in the section-by-section analysis (Supplementary Information, part III). Among other things, a bank will generally be required to prepare a notice of its privacy policies and practices and provide that notice to consumers under conditions as specified in the rule (*e.g.,* a privacy notice must be provided no later than the time that a customer relationship is established and then once annually for the duration of that customer relationship). Banks that disclose nonpublic personal information about consumers to nonaffiliated third parties will be subject to additional mandates, including a requirement to

provide an opt out notice to consumers along with a reasonable opportunity to opt out of certain disclosures.

There are a host of exceptions to the general rules stated above. For example, a bank may share a consumer's nonpublic personal information with nonaffiliated third parties without having to give an opt out notice if such sharing is necessary to effect, administer, or enforce a transaction requested or authorized by the consumer. These exceptions have the effect of minimizing the burden on institutions of all sizes.

To comply with the final rule, banks will need to, among other things, prepare disclosure forms, make various operational changes, and train staff. Professional skills needed to comply with the final rule may include clerical, computer systems, personnel training, as well as legal drafting and advice.

The compliance requirements and costs are likely to vary considerably among institutions, depending upon a number of factors, such as:

—Whether a bank intends to disclose covered information. A bank that does not disclose nonpublic personal information about consumers to third parties (or shares only to the extent permitted under the exceptions) (i) could have a streamlined privacy notice, (ii) will not need to provide an opt out notice to consumers, and (iii) will not need to implement procedures to honor the wishes of consumers that choose to opt out of certain information sharing.

—Whether the bank already has a notice describing its privacy policy. Various surveys suggest that a majority of banks already have privacy policies in place as part of usual and customary business practices. For these institutions, the costs for revising that policy to comply with the regulation are likely to be significantly less than would be the costs for those institutions having to develop a new policy.

—Whether the bank already has an opt-out mechanism in place pursuant to the Fair Credit Reporting Act (FCRA). Under the FCRA, a bank must provide opt out notices and have an opt out mechanism in place if the bank (i) shares certain consumer information (*i.e.,* application or credit report information) with its affiliates, and (ii) does not want to be treated as a consumer reporting agency under the Act. A bank that already gives FCRA notices and wants to share nonpublic personal information with nonaffiliated third parties should be able to adapt its existing opt out mechanism to accommodate the requirements of the final rule.

Summary of Significant Issues Raised by the Public Comments; Description of Steps the Agency Has Taken To Minimize Burden

One approach to minimizing the burden on small entities would be to provide a specific exemption for such institutions. The OCC has no authority under the statute to grant an exception that would remove small institutions from the entire scope of the rule. The OCC does have exemptive authority under section 504(b) to grant such exceptions to the opt out provisions ''as are deemed consistent with the purposes of'' the statute. The OCC believes that a wholesale exemption for small banks from the opt out provisions would be inconsistent with the purposes of the Act. As stated in section 501(a) of the Act, ''It is the policy of the Congress that *each* financial institution has an affirmative and continuing obligation to respect the privacy of its customers and to protect the security and confidentiality of those customers' nonpublic personal information.'' (Emphasis added.) The OCC believes the privacy of someone's nonpublic personal information is no less deserving of protection simply because the information is obtained by a small bank.

The final rule does, however, provide substantial flexibility so that any bank, regardless of size, may tailor its practices to its individual needs. For example, to minimize the burden and costs of distributing privacy policies, the final rule (i) allows each bank to choose the method by which it will distribute required notices (*e.g.,* banks may include an annual privacy notice with periodic account statements that the bank already sends to the customer) and (ii) allows for the initial privacy notice to be provided with other Federally mandated consumer disclosures, such as those required under the Truth-in-Lending Act.

In addition, the OCC carefully considered comments that suggested a variety of other alternatives to reduce burden. In response to these comments, the agency attempted to minimize the burden on all businesses, including small entities, in a manner consistent with providing the privacy protections mandated by the Act. The discussion below reviews some of the changes adopted in the final rule to accomplish this purpose. For a more complete discussion of significant issues raised by public comments and the changes adopted in the final rule, *see* the section-by-section analysis above, which is incorporated herein by reference (Supplementary Information, part III).

Content of disclosures. Many commenters interpreted the rule as requiring long, detailed privacy disclosures that, in these commenters' view, would be of little benefit to consumers. To address these comments, the final rule clarifies the level of detail that the OCC believes is appropriate under the statute. In particular, the final rule substantially revises the examples of disclosures that would satisfy the rule; Appendix A includes sample clauses that might be used; and the preamble states that the Agencies believe disclosures required by the rule could fit on a typical tri-fold brochure. Also, the Agencies have provided additional guidance under the caption Guidance for Certain Financial Institutions (Guidance) (Supplementary Information, Part IV). This Guidance, as well as the sample clauses in Appendix A, are intended to minimize the burden and costs for all banks, particularly small banks that will not generally be sharing nonpublic personal information with nonaffiliated third parties (except pursuant to the exceptions). In addition, the final rule permits a bank to provide a short-form privacy notice to a consumer that does not become a customer, provided the bank gives the consumer an opt out notice and notifies the consumer of a reasonably convenient method by which to obtain a copy of the full privacy notice.

Definition of nonpublic personal information. A bank that wants to share nonpublic personal information about a consumer with a nonaffiliated third party generally must comply with the opt out restrictions in the rule. However, information that is considered ''publicly available information'' is excluded from the definition of nonpublic personal information. The proposed rule offered two alternatives. Under Alternative A, information that is generally available from a public source would not be considered ''publicly available information'' unless a bank actually obtains the information from a public source. Under Alternative B, the fact that the information could be obtained from a public source is sufficient for the information to be considered publicly available. For the reasons stated earlier in the preamble, the OCC adopted a slightly revised version of Alternative B, the less burdensome option.

Effective date. By operation of section 510 of the statute, the relevant provisions of Title V take effective November 12, 2000. However, the statute authorizes the agencies to

prescribe a later date if implementing regulations are adopted. The proposed rule used the effective date prescribed by the statute. The OCC received a large number of comments from banks, including many from small entities, that requested more time to comply. Many such comments suggested that overall compliance costs could be reduced by delaying the effective date. For the reasons stated earlier in the preamble, the OCC believes it would be appropriate to give banks until July 1, 2001, to comply with the rule.

New notices not required for each new financial product or service. Some banks, including small entities, expressed concern that the proposed rule may require a new initial notice each time a consumer obtains a new financial product or service. This would be especially burdensome for banks that adopt a universal privacy policy that covers multiple products and services. To address these concerns and minimize economic burden, the final rule clarifies that a new initial notice is not required if the bank has given the customer the bank's initial notice, and that the bank's initial notice remains accurate with respect to the new product or service.

Annual notice requirement. Many banks, including small entities, suggested alternative, less burdensome methods for complying with the requirement that banks provide their customers with an annual privacy notice. As discussed earlier in the preamble, the OCC responded to these comments with a provision in the final rule that permits a bank to comply with the annual privacy notice requirements for customers under certain circumstances by continually posting the notice on the bank's web site in a clear and conspicuous manner.

Notice to joint account holders. As noted earlier in the preamble, the final rule allows banks to provide one notice to joint account holders, with the understanding being that a decision to opt out made by one of the account holders will, absent a provision in the opt out notice to the contrary, prevent the bank from disclosing any nonpublic personal information about any of the account holders. This is particularly advantageous for banks, including small entities, that do not intend to share nonpublic personal information with nonaffiliated third parties (except as permitted under the exceptions).

The OCC, along with the other Agencies, intends to publish a small entity compliance guide—separate from and in addition to the guidance for certain financial institutions included as part of this **Federal Register** notice—that will clarify the operation of and compliance with the rule.

Board: The Regulatory Flexibility Act (5 U.S.C. 604) requires an agency to publish a final regulatory flexibility analysis when promulgating a final rule that was subject to notice and comment.

Need for and Objectives of Rule

As discussed above, this rule implements the privacy provisions in sections 502–510 of the GLB Act. The rule's objectives are to protect nonpublic personal information about consumers collected by financial institutions by:

(1) Requiring a financial institution to provide notice to customers about its privacy policies and practices;

(2) Describing the conditions under which a financial institution may disclose nonpublic personal information about consumers to nonaffiliated third parties; and

(3) Providing a method for consumers to prevent a financial institution from disclosing that information to most nonaffiliated third parties by ''opting out'' of that disclosure, subject to certain exceptions.

Comments on the Initial Regulatory Flexibility Analysis

Although few commenters addressed the initial regulatory flexibility analysis specifically, many commenters addressed the regulatory burdens that were discussed in that analysis. Commenters provided a wide range of estimates of the costs of compliance, demonstrating the difficulty of precisely measuring the implementation costs for GLB Act privacy provisions. For example, one commenter representing a $4 billion dollar multi-bank holding company with ten financial institutions, estimated compliance costs at $160,000/year (an average of $16,000 per institution), contrasted with a $500 million institution that estimated compliance costs at $40,000/year. Another commenter representing an $18 billion dollar bank holding company estimated compliance costs at $2.1 million, while one of the nation's largest financial institutions estimated compliance costs between $2.5–$18 million. In another comment, a public policy group estimated that the costs of the rule ''may likely exceed $223 million annually'' based on a sample of deposit accounts and estimated loan accounts at 54 ''major institutions'' around the United States.

Many commenters principally discussed the burdens that would be imposed by the proposed rule due to the effective date and the amount of detail that financial institutions would have to describe in their initial and annual notices.

Many commenters urged the Board to extend the proposed November 13, 2000, effective date, for periods ranging from six months to two years. Most of these commenters argued that complying with the rule by November 13, 2000, would place an extraordinary burden on their businesses, particularly because the notices required by the rule would mandate changes to computer software, employee training, and compliance systems. To address these concerns, compliance with the final rule will be deferred until July 1, 2001.

Many commenters urged the Board to reduce the level of detail that they perceived would be required in the notices under the proposed rule. Commenters argued, for instance, that requiring a detailed description of all of the sources of information that they use to collect information about their customers would make the notices too lengthy and complicated. In a similar vein, many commenters proposed that the Board should issue model forms to demonstrate the kinds of notices that would be permitted by the rule.

The Board believes that the intent of the original proposal on the level of detail expected under the proposed rule was widely misinterpreted. The notices section has been redrafted in an effort to clarify the requirements. This should lead to modular provisions based on examples in the regulations that could be used by most institutions. The Board and the other Agencies have included, in an appendix to the final rule, sample clauses illustrating elements of the notice requirements for a small institution that does not sell information for marketing purposes and a large holding company with multiple affiliates that distributes information broadly. To further assist institutions in complying with the rule, the Board and the other Agencies have included in this **Federal Register** notice guidance for certain institutions that do not disclose nonpublic personal information to nonaffiliated third parties outside of the statutory exceptions.

Nevertheless, some institutions may have to craft notice provisions to cover unique aspects of their privacy practices. This is necessary because it is impossible for the Board to anticipate all disclosure practices. In the absence of knowledge of these practices, any attempt to craft ''model notices'' that could be used by all institutions runs a substantial risk of being misleading.

The Board also modified the final rule to clarify that a financial institution need not provide another initial notice to an existing customer who obtains a

new financial product or service so long as the previous notice provided to that customer was accurate with respect to the new financial product or service. The Board believes that this provision will enable a financial institution to adopt a single, comprehensive privacy policy for its financial products and services, and at the same time, reduce the costs to ensure that it delivers an accurate copy of its policy to each customer.

The Board also clarified the final rule to permit a financial institution to provide one copy of the initial, annual, and revised notices, respectively, to consumers who jointly obtain a financial product or service. Correspondingly, the Board clarified that a financial institution may provide one opt out notice, if applicable, to consumers who jointly obtain a financial product or service.

Institutions Covered

The Board's final rule will apply to approximately 9,500 institutions, including state member banks, bank holding companies and certain of their nonbank subsidiaries or affiliates, state uninsured branches and agencies of foreign banks, commercial lending companies owned or controlled by foreign banks, and Edge and Agreement corporations. The Board estimates that over 4,500 of the institutions are small institutions with assets less than $100 million.

New Compliance Requirements

The final rule contains new compliance requirements for all covered institutions, most of which are required by the GLB Act. The institutions will be required to prepare notices of their privacy policies and practices and provide those notices to consumers as specified in the rule. Institutions that disclose nonpublic personal information about consumers to nonaffiliated third parties will be required to provide opt out notices to consumers as well as a reasonable opportunity to opt out of certain disclosures. These institutions will have to develop systems for keeping track of consumers' opt out directions. Some institutions, particularly those that disclose nonpublic information about consumers to nonaffiliated third parties, will likely need the advice of legal counsel to ensure that they comply with the rule, and may also require computer programming changes and additional staff training.

Minimizing Impact on Small Institutions

The Board believes the requirements of the Act and this rule will create additional burden for covered institutions, particularly those that disclose nonpublic personal information about consumers to nonaffiliated third parties. The rule applies to all covered institutions, regardless of size. The Act does not provide the Board with the authority to exempt a small institution from the requirement to provide a notice of its privacy policies and practices to its customers. Although the Board could exempt small institutions from providing a notice and opportunity for consumers to opt out of certain information disclosures, the Board does not believe that such an exemption would be appropriate, given that one of the purposes of the Act is to provide notice to consumers about the disclosure of nonpublic personal information.

The Board believes that the burden is significantly lower for institutions that do not disclose nonpublic personal information about consumers to nonaffiliated third parties. These institutions may provide relatively simple initial and annual notices to consumers with whom they establish customer relationships. Also, the Board intends to publish a small entity compliance guide—separate from and in addition to the guidance for certain financial institutions included as part of this **Federal Register** notice—aimed to generally clarify the operation of and compliance with the rule.

FDIC: The Regulatory Flexibility Act (5 U.S.C. 601–612) (RFA) requires, subject to certain exceptions, that federal agencies prepare an initial regulatory flexibility analysis (IRFA) with a proposed rule and a final regulatory flexibility analysis (FRFA) with a final rule, unless the agency certifies that the rule will not have a significant economic impact on a substantial number of small entities. [16] At the time of issuance of the proposed rule, the FDIC could not make such a determination for certification, therefore the FDIC issued an IRFA pursuant to section 603 of the RFA. After considering the comments submitted in response to the proposed rule, the FDIC believes that it does not have sufficient information to determine whether the final rule would have a significant economic impact on a substantial number of small entities. Therefore, pursuant to section 604 of the RFA, the FDIC provides the following FRFA.

This FRFA incorporates the FDIC's initial findings, as set forth in the IRFA; addressees the comments submitted in response to the IRFA; and describes the steps the FDIC has taken in the final rule to minimize the impact on small entities, consistent with the objectives of the GLB Act. Also, in accordance with Section 212 of the Small Business Regulatory Enforcement Fairness Act of 1996 (Public Law 104–121), the FDIC will in the near future issue a Small Entity Compliance Guide to assist small entities in complying with this rule.

Statement of the Need/Objectives of the Rule

The final rule implements the provisions of Title V, Subtitle A of the GLB Act addressing consumer privacy. In general, these statutory provisions require banks to provide notice to consumers about an institution's privacy policies and practices, restrict institutions from sharing nonpublic personal information about consumers with nonaffiliated third parties, and permit consumers to prevent institutions from disclosing nonpublic personal information about them to certain non-affiliated third parties by ''opting out'' of that disclosure. Section 504 of the GLB Act requires the FDIC, in consultation with representatives of State insurance authorities, to prescribe ''such regulations as may be necessary'' to carry out the purposes of Title V, Subtitle A. If no regulations were promulgated, substantive burdens imposed by the Act (*e.g.,* the notice, information sharing restrictions, and opt out requirements) would have become effective and binding on banks one year from the date the Act was signed into law. The FDIC believes that the final rule gives the private sector greater certainty on how to comply with the statute and clearer guidance regarding how it will be enforced.

Summary of Significant Issues Raised in Public Comments

In the IRFA, the FDIC specifically requested information on the costs of creating privacy policy disclosures, distributing privacy policy disclosures, implementing ''opt out'' disclosure and processing requirements, and complying with the proposed rule in its entirety. The FDIC received few comments responsive to the issue of implementation costs. While the majority of commenters representing the financial services industry indicated that compliance with the regulation

[16] The RFA defines the term ''small entity'' in 5 U.S.C. 601 by reference to definitions published by the Small Business Administration (SBA). The SBA has defined a ''small entity for banking purposes as a national or commercial bank, savings institution or credit union with less than $100 million in assets. See 13 CFR 121.201.

would require significant effort, these comments most often requested additional time to comply with the final rule, and did not address estimated costs to comply with the regulation.

The few comments that the FDIC did receive quantifying the economic costs of compliance reflected a wide range of estimates, demonstrating the difficulty of precisely measuring the implementation costs for GLB Act privacy provisions. For example, one commenter representing a $4 billion dollar multi-bank holding company with ten financial institutions, estimated compliance costs at $160,000/year (an average of $16,000 per institution), contrasted with a $500 million dollar institution that estimated compliance costs at $40,000/year. Another commenter representing an $18 billion dollar bank holding company estimated compliance costs at $2.1 million, while one of the nation's largest financial institutions estimated compliance costs between $2.5–$18 million. In another comment, a public policy group estimated that the costs of the rule ''may likely exceed $223 million annually'' based on a sample of deposit accounts and estimated loan accounts at 54 ''major institutions'' around the United States [17].

Summary of the Agency Assessment of Issues Raised in Public Comments

Both the limited numbers of comments received that discussed compliance costs and the wide range of estimates provided, reflect the uncertainty of estimating the costs of implementing the GLB Act requirements. The new compliance requirements will indeed create additional economic costs for institutions, especially those that disclose information to nonaffiliated third parties. These costs include, but are not limited to (1) reviewing current information sharing practices; (2) determining operational changes necessary; (3) identifying sources/uses of customer information; (4) preparing disclosure forms; and (5) training staff. Most, if not, all of these costs result from requirements expressly mandated by the GLB Act.

After a careful review of the comments received, the FDIC does not have a practicable or reliable basis for quantifying the costs of implementing the requirements of the GLB Act. We expect that compliance costs will vary significantly between institutions depending on information sharing practices. The FDIC continues to believe that the costs of implementing the opt out provisions of the final rule will be insubstantial for financial institutions that do not disclose nonpublic personal information to nonaffiliated third parties or only do so pursuant to the exceptions provided under sections 332.14 and 332.15. FDIC's determination is based on the observations of FDIC examiners, which were discussed in the IRFA, and the analysis of comments received in response to the proposed rule. These institutions may provide relatively simple initial and annual notices to consumers with whom they establish customer relationships. However, the FDIC cannot determine either the number or identity of institutions that will not disclose nonpublic personal information about consumers to nonaffiliated third parties or that only do so pursuant to the exceptions provided under sections 332.14 and 332.15.

Description/Estimate of Small Entities To Which the Rule Will Apply

The final rule will apply to approximately 3,700 FDIC-insured State nonmember banks that are small entities (assets less than $100 million) as defined by the RFA.

Description of Projected Reporting, Recordkeeping, and Other Compliance Requirements

The final rule contains new compliance requirements for all covered institutions, most of which are required by the GLB Act. The institutions will be required to prepare notices of their privacy policies and practices, and provide those notices to consumers as specified in the rule. Institutions that disclose nonpublic personal information about consumers to nonaffiliated third parties will be required to provide opt out notices to consumers, as well as a reasonable opportunity to opt out of certain disclosures. These institutions will have to develop systems for keeping track of consumers' opt out directions. Some institutions, particularly those that disclose nonpublic information about consumers to nonaffiliated third parties, will likely need the advice of legal counsel to ensure that they comply with the rule, and may also require computer programming changes and additional staff training. As discussed earlier, the FDIC does not have a practicable or reliable basis for quantifying the compliance costs of the final rule. Nor can the FDIC determine the number of small entities that will disclose nonpublic personal information about consumers to nonaffiliated third parties.

Steps Agency Has Taken To Minimize the Significant Economic Impact on Small Entities

The final rule incorporates new compliance requirements, which are expressly mandated by the GLB Act. The GLB Act mandates (1) providing notice of privacy policies/practices; (2) restricting the conditions under which a financial institution may disclose nonpublic personal information to nonaffiliated third parties; and (3) providing a method for consumers to prevent their nonpublic personal information from being shared with nonaffiliated third parties. The FDIC has sought to minimize the burden on all businesses, including small entities, in promulgating this final rule. Nonetheless, the statute does not authorize the FDIC to create exemptions from the GLB Act based on an institution's size. While the final rule attempts to clarify, consolidate, and simplify the statutory requirements for all entities, the FDIC has little discretion, if any, to mandate different compliance standards for small entities. Moreover, different compliance standards would be inconsistent with the purposes of GLB Act.

Throughout this rulemaking proceeding, the FDIC sought to gather information regarding the economic impact of the GLB Act's requirements for all financial institutions, including small entities. The proposed rule and the IRFA included a number of questions for public comment regarding the costs associated with complying with the rule and the impact on small entities. In addition, the FDIC held a public forum on privacy [18] during the comment period, which included representatives of small insured depository institutions and topics designed to elicit information about the rule's economic impact. The FDIC carefully considered comments that suggested a variety of alternatives that could minimize the economic and overall burden of complying with the final rule. The discussion below reviews some of the significant changes adopted in the final rule to accomplish this purpose. For a more complete discussion of the changes adopted in the final rule, see the ''Section-by-section analysis'' under Supplementary Information, Part III.

1. Sample disclosure clauses (Appendix A to Part 332) and guidance

[17] This estimate was not limited to FDIC-supervised institutions, but rather was based on all financial institutions subject to the GLB Act.

[18] FDIC Forum, ''Is it Any of Your Business? Consumer Information, Privacy, and the Financial Services Industry'' (March 23, 2000).

for certain institutions (supplementary information, part IV). Many commenters expressed concern over the amount of detail that appears to be required in both initial and annual Notices. In addition many of the commenters requested model forms for guidance as to the level of detail required. The FDIC did not intend for the disclosures to be overly detailed and thus, burdensome for institutions and potentially overwhelming for consumers. In response to these comments, Appendix A to Part 332 contains sample clauses to clarify the level of detail that the FDIC believes is necessary and appropriate to be consistent with the statute. The FDIC has also provided additional assistance under the caption Guidance for Certain Institutions (Guidance) (Supplementary Information, Part IV). The Guidance generally clarifies the operation of the final rule. It also provides an example of a notice for institutions that only share nonpublic personal information with nonaffiliated third parties pursuant to the exceptions provided in Sections 332.14 and 332.15. The Guidance may be used in conjunction with the sample clauses contained in Appendix A.

The sample clauses under Appendix A and the Guidance are intended to minimize the burden and costs to financial institutions, including small entities. This is especially true for small institutions that do not share nonpublic personal information with nonaffiliated third parties or only do so pursuant to the exceptions provided in sections 332.14 and 332.15. These institutions may provide relatively simple initial and annual notices to consumers with whom they establish customer relationships.

2. Definition of nonpublic personal information. In the proposed rule, the FDIC provided two alternatives for defining nonpublic personal information. The first, (Alternative A) deemed information as publicly available only if a financial institution *actually obtained* the information from a public source, whereas the second (Alternative B) treated information as publicly available if a financial institution *could* obtain it from such a source. A significant majority of commenters who commented on Alternatives A and B favored Alternative B. Many commenters suggested that implementing Alternative A would be overly burdensome. Institutions would have to develop some sort of methodology to distinguish between information obtained from consumers, versus information obtained through public sources. In response to these comments, the final rule adopts a modified version of Alternative B (refer to Section-by-section analysis for additional information) that treats information as publicly available if a financial institution could obtain the information from a public source. The final rule addresses the concerns of financial institutions—including small institutions—by adopting the less economically burdensome definition of nonpublic personal information.

3. *Effective date.* Section 510 of the GLB Act states that, as a general rule, the relevant provisions of Title V take effect 6 months after the date on which rules are required to be prescribed, *i.e.*, November 12, 2000. However, section 510(1) authorizes the Agencies to prescribe a later date in the rules enacted pursuant to section 504. The proposed rule sought comment on the effective date prescribed by the statute. The overwhelming majority of financial institution commenters requested additional time to comply with the final rule. Several commenters noted that financial institutions may encounter difficulty managing the expenses and resources required to comply with the final rule as the institution's budget for the current year was established prior to the issuance of the proposed regulation. This may be especially true for small institutions that face already tight budgetary constraints due to heightened competition. For the reasons stated in the preamble, the FDIC has retained the effective date of November 13, 2000, but, in order to provide sufficient time for institutions to establish policies and systems to comply with the requirements of this part, the FDIC has extended the time for compliance with this part until July 1, 2001. This additional time will allow financial institutions to properly budget for any necessary expenses and staff resources required to comply with this rule and to make all necessary operational changes.

4. *New notices not required for each new financial product or service.* Some commenters expressed concern that the proposed rule may require a new initial notice each time a consumer obtains a new financial product or service. This would be especially burdensome for institutions that adopt a universal privacy policy that covers multiple products and services. To address these concerns and minimize economic burden, the final rule was clarified to instruct institutions that a new initial notice is not required if the institution has given the customer the institution's initial notice, and that the institution's initial notice remains accurate with respect to the new product or service.

5. *Short form initial notice for consumers.* In the proposed rule, financial institutions were required to provide consumers a copy of their complete initial notice when there is no customer relationship. In response to comments that suggested that the objectives of the initial notice requirements of the statute could be accomplished in a less burdensome way, the FDIC has exercised its exemptive authority as provided in section 504(b) to create an exception to the general rule that otherwise requires a financial institution to provide both the initial and opt out notices to a consumer before disclosing nonpublic personal information about that consumer to nonaffiliated third parties. A financial institution may provide a ''short-form'' initial notice along with the opt out notice to a consumer with whom the institution does not have a customer relationship. This short-form notice must state that the disclosure containing information about the institution's privacy policies and practices is available upon request and provide one or more reasonable means by which the consumer may obtain a copy of the notice. This provision in the final rule will lessen the burden on financial institutions, including small entities.

6. *Notice to joint account holders.* As noted earlier in the preamble, the final rule allows financial institutions to provide one notice to joint account holders, with the understanding that a decision to opt out made by one of the account holders will, absent a provision in the opt out notice to the contrary, prevent the institution from disclosing any nonpublic personal information about any of the account holders. This is particularly advantageous for institutions, including small entities, that do not intend to share nonpublic personal information with nonaffiliated third parties (except as permitted under the exceptions).

OTS: The Regulatory Flexibility Act (5 U.S.C. 601–612) requires OTS to prepare a final regulatory flexibility analysis with a final rule, unless the agency certifies that the rule will not have a significant economic impact on a substantial number of small entities.[19] OTS does not believe this rule will have a significant economic impact on a significant number of thrifts or thrift subsidiaries because the burden imposed on small thrifts stems in large part from the GLB Act rather than from the final rule. The rule restates and clarifies the statutory requirements. These clarifications should reduce the burden of complying with the GLB Act

[19] For purposes of the Regulatory Flexibility Act, a small savings association is one with less than $100 million in assets. 13 CFR 121.201 (Division H).

provisions. OTS has revised the proposed rule to reduce the regulatory burden on financial institutions of all sizes, as discussed below. In addition, OTS intends to publish a compliance guide to assist institutions in complying with this rule. However, because the GLB Act creates requirements that are new to both the OTS and to the thrift industry, and because OTS is uncertain what the economic impact will be of compliance with the new requirements, OTS has prepared the following final regulatory flexibility analysis.

Need for and Objectives of the Rule; Compliance Requirements; Institutions Covered

The final rule is needed to implement the provisions of Title V, Subtitle A of the GLB Act addressing consumer privacy. The objectives of the rule are to protect nonpublic personal information that financial institutions collect by:

(1) Requiring each financial institution to provide notice to customers about its privacy policies and practices;

(2) Describing the conditions under which a financial institution may disclose nonpublic personal information to nonaffiliated third parties;

(3) Providing a method for consumers to prevent a financial institution from disclosing that information to most nonaffiliated third parties by opting out of that disclosure, subject to certain exceptions.

The compliance requirements of the rule are detailed earlier in this preamble.

Financial institutions will need professional skills to comply with this rule. To prepare the required privacy disclosures and opt out disclosures, institutions may need legal or other professional advice and drafting. This is true for the initial disclosures and notices, as well as for any subsequent changes to those documents. For institutions that publish privacy notices electronically or accept electronic opt outs, computer expertise will be necessary to convert the documents to the appropriate electronic form. Financial institutions that contract with nonaffiliates to perform services for the institution may require legal advice and drafting to ensure that such contracts contain the required restrictions on the nonaffiliates' use of information it receives. Financial institutions that make disclosures from which consumers may opt out may require professional skills to process opt out directions. Some institutions may use clerical or computer programmer skills to perform these tasks. Some degree of personnel training will be necessary, such as to train staff on the procedures for entering opt out data into a computer database.

This rule will apply to approximately 486 small thrifts, approximately 97 of which have subsidiaries.

Effects of the Final Rule

Commenters provided a wide range of estimates of the costs of compliance, demonstrating the difficulty of measuring the costs of implementing the GLB Act privacy provisions.

Complying with consumers' opt out directions will account for a significant portion of the implementation costs. Measuring the costs of complying with opt outs is especially difficult because of two uncertainties. First, OTS does not know how many financial institutions now make the type of information disclosures that will give rise to consumer opt out rights. Some institutions that currently make such disclosures may cease doing so. OTS cannot predict how many institutions will make such disclosures in the future. A second uncertainty is the number of consumers who will opt out of information disclosures. Because such opt out rights are new, OTS has no basis upon which to predict future consumer elections. Thus, OTS does not know how many institutions will need to comply with opt out directions, and does not know how many opt out directions those institutions will receive. For these reasons, OTS cannot provide a practicable or reliable quantification of the effects of the rule or of any of the significant alternatives OTS considered.

OTS expects that compliance costs will vary significantly between thrifts depending on their information sharing practices. OTS expects that the costs of implementing the opt out provisions will be insubstantial for thrifts that do not disclose nonpublic personal information to nonaffiliated third parties. These institutions need only provide relatively simple initial and annual privacy notices to their customers.

OTS, consistent with the other Agencies, has revised some requirements in this rule so that they are less burdensome. The discussion below reviews the significant changes to reduce regulatory burden.

Summary of Significant Issues Raised in Public Comments; Significant Alternatives

Although few commenters addressed the initial regulatory flexibility analysis, many commenters addressed the regulatory burdens. These commenters included both large and small institutions. In response, OTS considered different alternatives, and made certain changes to the rule to reduce undue regulatory burden, consistent with the purposes of GLB. These efforts to reduce regulatory burden will affect both large and small institutions. The significant alternatives that commenters discussed and that OTS considered are as follows.

Effective date. One of the most significant comments on burden discussed the rule's effective date. Many industry commenters urged OTS to extend the rule's proposed November 13, 2000 effective date. As discussed above, many of these commenters argued that complying with the rule by November 13, 2000 would place an extraordinary burden on their businesses, particularly because the required privacy and opt out notices would necessitate changes to computer software and would require employee training. After considering these concerns, OTS has delayed mandatory compliance with the regulation until July 1, 2001. However, OTS encourages thrifts to comply with the rule before that date.

Content of privacy notices. Many commenters were concerned that the rule would require an inappropriate level of detail in privacy notices, making those notices too lengthy. Some commenters noted that detailed privacy notices would require burdensome and costly frequent revisions. Many commenters suggested that OTS issue model privacy disclosures. OTS responded to such comments by clarifying the requirements for the content of privacy notices, as discussed more fully in the preceding section-by-section analysis. These clarifications should ease the compliance burden of this rule.

Further, OTS has included an appendix to the rule, containing a variety of sample clauses for privacy notices. OTS also has included in this **Federal Register** notice a Compliance Guide. Both the Appendix and the Compliance Guide are designed to assist financial institutions, especially small institutions, in complying with this new rule.

Exemption for small institutions. Some commenters suggested that small institutions be exempt from many requirements of this rule. However, OTS does not believe the GLB Act allows alternative privacy rules based on a financial institution's size. As Congress stated in § 501(a) of the Act, ''It is the policy of the Congress that *each* financial institution has an affirmative and continuing obligation to respect the privacy of its customers and to protect

the security and confidentiality of those customers' nonpublic personal information.'' (Emphasis added.) OTS believes a person's privacy is equally deserving no matter the size of the financial institutions with which the person interacts. OTS did not, therefore, exempt small institutions from this rule.

Number of notices. Many commenters believe that the proposed rule would have required an undue number of privacy notices. In response, as discussed above, OTS considered alternative methods to reduce the burden of providing redundant or unhelpful privacy notices. First, the final rule makes clear that financial institutions do not need to provide a repetitive privacy notice each time an existing customer obtains a new financial product or service, as long as that customer already received a notice covering the new product or service.

Second, the final rule clarifies the notice requirements in connection with joint accounts. It makes clear that financial institutions do not necessarily have to provide privacy and opt out notices to each joint account holder.

Third, the final rule does not require a financial institution to provide a full initial notice to consumers who do not establish a customer relationship with the institution, if the institution will not share that consumer's nonpublic personal information with nonaffiliated third parties. In these situations, the institution may instead provide a short-form initial notice, and give the consumer a reasonable means to obtain the full initial notice if the consumer wishes to do so. A full initial notice would not be helpful in these cases to consumers who have no continuing relationship with the institution. The institution is still restricted from disclosing that consumer's nonpublic personal information to nonaffiliated parties without first providing opt out rights, as GLB requires.

Fourth, the final rule requires fewer notices than the proposed rule would have required, concerning loans that involve multiple financial institutions. The proposed rule would have required privacy notices to consumers from each financial institution that owns any part of, or that services, a single consumer loan. Commenters suggested that multiple privacy notices in these cases would be unnecessarily burdensome. In response to these comments, OTS has included a special rule for loans, discussed more fully earlier in this preamble, that would reduce the number of privacy notices required in these cases.

These changes are designed to reduce the number of redundant and unhelpful notices required, and thereby reduce the regulatory burden of this rule, without eroding consumer protections.

Annual notices. Many commenters requested that OTS reduce regulatory burden by requiring less frequent or shorter annual notices. The GLB Act plainly requires annual privacy notices to customers, so OTS lacks authority to eliminate the requirement altogether. However, as discussed earlier, the final rule does allow institutions under certain circumstances to provide annual notices on their web sites. This change should reduce costs of providing required annual notices, consistent with GLB Act mandates.

Outside service providers. Some commenters expressed concern that the proposed rule would have required burdensome contractual terms in connection with outside service providers. Disclosures a financial institution makes to its service providers are exempt from opt out requirements under § 573.13, but require the disclosing financial institution to restrict, by contract, the service provider's ability to use the information. Other disclosures are exempt from the rule's notice and opt out requirements under §§ 573.14 and 573.15, but, unlike § 573.13, §§ 573.14 and 573.15 do not require contractual restrictions on recipients' use of information. Commenters noted that some disclosures simultaneously quality for exemption under § 573.13 and under §§ 573.14 or 573.15. These commenters requested that the final rule clarify whether, in such cases, the specific contractual requirements in § 573.13 apply. The final rule clarifies that they do not, as discussed more fully in the preceding section-by-section analysis.

This clarification may be especially important to smaller institutions because they may be more likely than large institutions to use outside parties to service transactions. Further, small institutions may be less likely to have in-house counsel available to advise them on, and to draft, the contractual terms that § 573.13 would have required without this clarification. Without this change, small institutions may have needed to seek expensive outside legal advice to comply with the rule. This clarification will allow small institutions to outsource transaction processing without having to use unnecessarily burdensome and costly contractual language.

Nonpublic Personal Information. Nonpublic personal information gets certain protections under this rule, but it is defined to exclude publicly available information. The proposed rule included two alternative definitions. Under proposed Alternative A, information would be considered publicly available if a financial institution were to actually obtain the information from a public source. Under proposed Alternative B, information would be considered publicly available if a financial institution could obtain it from a public source. Many commenters urged OTS to adopt Alternative B. They pointed out that Alternative A would require institutions to develop and maintain an information tracking system to determine whether particular information is publicly available. In response to these concerns, the final rule includes a definition of nonpublic personal information, discussed more fully above, that does not require financial institutions to create tracking systems for publicly available information.

Plain language. Some commenters, including small institutions, complained that the proposed rule was complex. Institutions expressed concerns that they could be exposed to legal liability because they could not understand what the rule requires. OTS responded to these comments by revising the proposed rule to be more understandable. The final rule is reorganized, is broken down into more sections, and has similar sections grouped together in subparts. This makes provisions of the rule easier to find. Additionally, OTS reworded its final rule to use more direct and clear language.

The OTS, along with the other Agencies, intends to publish a small entity compliance guide—separate from and in addition to the guidance for certain financial institutions included as part of this **Federal Register** notice—that will clarify the operation of and compliance with the rule.

C. Executive Order 12866

OCC and OTS: The Comptroller of the Currency and Director of the Office of Thrift Supervision each has determined that this rule does not constitute a ''significant regulatory action'' for the purposes of Executive Order 12866. The rule follows closely the requirements of title V, subtitle A of the GLB Act. Since, the GLB Act establishes the minimum requirements for this activity, the OCC and OTS have little discretion to propose regulatory options that might significantly reduce costs or other burdens. However, even absent the requirements of the GLB Act, if the OCC and OTS issued the rule under its own authority, the rule would not constitute a ''significant regulatory action'' for the purposes of Executive Order 12866.

For a financial institution that does not intend to disclose nonpublic personal information about its consumers or customers to nonaffiliated third parties, the burden created by the statute and implementing regulation is that of preparing and distributing an initial and annual notice of the institution's privacy policies and practices. The institution need not provide an opt out notice or establish a system for consumers to opt out. For institutions that do intend to make such disclosures, they will do so only after determining that the benefits of making the disclosures of nonpublic personal information outweigh the costs. Accordingly, the regulation's provisions governing opt outs impose no net burden on those institutions disclosing nonpublic personal information. The final rule makes a large number of significant changes to the requirements governing initial and annual notices that reduce burden while preserving the consumer protections created by the statute.

D. Unfunded Mandates Act of 1995

Section 202 of the Unfunded Mandates Reform Act of 1995, 2 U.S.C. 1532 (Unfunded Mandates Act), requires that an agency prepare a budgetary impact statement before promulgating any rule likely to result in a Federal mandate that may result in the expenditure by State, local, and tribal governments, in the aggregate, or by the private sector, of $100 million or more in any one year. If a budgetary impact statement is required, section 205 of the Unfunded Mandates Act also requires the agency to identify and consider a reasonable number of regulatory alternatives before promulgating the rule. However, an agency is not required to assess the effects of its regulatory actions on the private sector to the extent that such regulations incorporate requirements specifically set forth in law. 2 U.S.C. 1531. Most of the rule's provisions are already mandated by the applicable provisions in Title V of the GLB Act, which would become effective and binding on the private sector even without a regulatory promulgation. Therefore, the OCC and OTS have determined that this regulation will not result in expenditures by State, local, and tribal governments, in the aggregate, or by the private sector, of $100 million or more in any one year. Accordingly, the OCC and OTS have not prepared a budgetary impact statement or specifically addressed the regulatory alternatives considered.

List of Subjects

12 CFR Part 40

Banks, banking, Consumer protection, National banks, Privacy, Reporting and recordkeeping requirements.

12 CFR Part 216

Banks, banking, Consumer protection, Federal Reserve System, Foreign banking, Holding companies, Information, Privacy, Reporting and recordkeeping requirements.

12 CFR Part 332

Banks, banking, Consumer protection, Foreign banking, Privacy, Reporting and recordkeeping requirements.

12 CFR Part 573

Consumer protection, Privacy, Savings associations.

Office of the Comptroller of the Currency

12 CFR Chapter I

Authority and Issuance

For the reasons set out in the joint preamble, the OCC amends chapter I of title 12 of the Code of Federal Regulations by adding a new part 40 to read as follows:

PART 40—PRIVACY OF CONSUMER FINANCIAL INFORMATION

Sec.
40.1 Purpose and scope.
40.2 Rule of construction.
40.3 Definitions.

Subpart A—Privacy and Opt Out Notices

40.4 Initial privacy notice to consumers required.
40.5 Annual privacy notice to customers required.
40.6 Information to be included in privacy notices.
40.7 Form of opt out notice to consumers; opt out methods.
40.8 Revised privacy notices.
40.9 Delivering privacy and opt out notices.

Subpart B—Limits on Disclosures

40.10 Limitation on disclosure of nonpublic personal information to nonaffiliated third parties.
40.11 Limits on redisclosure and reuse of information.
40.12 Limits on sharing account number information for marketing purposes.

Subpart C—Exceptions

40.13 Exception to opt out requirements for service providers and joint marketing.
40.14 Exceptions to notice and opt out requirements for processing and servicing transactions.
40.15 Other exceptions to notice and opt out requirements.

Subpart D—Relation to Other Laws; Effective Date

40.16 Protection of Fair Credit Reporting Act.
40.17 Relation to State laws.
40.18 Effective date; transition rule.

Appendix A to Part 40—Sample Clauses

Authority: 12 U.S.C. 93a; 15 U.S.C. 6801 *et seq.*

§ 40.1 Purpose and scope.

(a) *Purpose.* This part governs the treatment of nonpublic personal information about consumers by the financial institutions listed in paragraph (b) of this section. This part:

(1) Requires a financial institution to provide notice to customers about its privacy policies and practices;

(2) Describes the conditions under which a financial institution may disclose nonpublic personal information about consumers to nonaffiliated third parties; and

(3) Provides a method for consumers to prevent a financial institution from disclosing that information to most nonaffiliated third parties by ''opting out'' of that disclosure, subject to the exceptions in §§ 40.13, 40.14, and 40.15.

(b) *Scope.* (1) This part applies only to nonpublic personal information about individuals who obtain financial products or services primarily for personal, family, or household purposes from the institutions listed below. This part does not apply to information about companies or about individuals who obtain financial products or services for business, commercial, or agricultural purposes. This part applies to United States offices of entities for which the Office of the Comptroller of the Currency has primary supervisory authority. They are referred to in this part as ''the bank.'' These are national banks, District of Columbia banks, Federal branches and Federal agencies of foreign banks, and any subsidiaries of such entities except a broker or dealer that is registered under the Securities Exchange Act of 1934, a registered investment adviser (with respect to the investment advisory activities of the adviser and activities incidental to those investment advisory activities), an investment company registered under the Investment Company Act of 1940, an insurance company that is subject to supervision by a State insurance regulator (with respect to insurance activities of the company and activities incidental to those insurance activities), and an entity that is subject to regulation by the Commodity Futures Trading Commission.

(2) Nothing in this part modifies, limits, or supersedes the standards

governing individually identifiable health information promulgated by the Secretary of Health and Human Services under the authority of sections 262 and 264 of the Health Insurance Portability and Accountability Act of 1996 (42 U.S.C. 1320d–1320d–8).

§ 40.2 Rule of construction.

The examples in this part and the sample clauses in appendix A of this part are not exclusive. Compliance with an example or use of a sample clause, to the extent applicable, constitutes compliance with this part.

§ 40.3 Definitions.

As used in this part, unless the context requires otherwise:

(a) *Affiliate* means any company that controls, is controlled by, or is under common control with another company.

(b)(1) *Clear and conspicuous* means that a notice is reasonably understandable and designed to call attention to the nature and significance of the information in the notice.

(2) *Examples.* (i) *Reasonably understandable.* A bank makes its notice reasonably understandable if it:

(A) Presents the information in the notice in clear, concise sentences, paragraphs, and sections;

(B) Uses short explanatory sentences or bullet lists whenever possible;

(C) Uses definite, concrete, everyday words and active voice whenever possible;

(D) Avoids multiple negatives;

(E) Avoids legal and highly technical business terminology whenever possible; and

(F) Avoids explanations that are imprecise and readily subject to different interpretations.

(ii) *Designed to call attention.* A bank designs its notice to call attention to the nature and significance of the information in it if the bank:

(A) Uses a plain-language heading to call attention to the notice;

(B) Uses a typeface and type size that are easy to read;

(C) Provides wide margins and ample line spacing;

(D) Uses boldface or italics for key words; and

(E) In a form that combines the bank's notice with other information, uses distinctive type size, style, and graphic devices, such as shading or sidebars, when you combine your notice with other information.

(iii) *Notices on web sites.* If a bank provides a notice on a web page, the bank designs its notice to call attention to the nature and significance of the information in it if the bank uses text or visual cues to encourage scrolling down the page if necessary to view the entire notice and ensure that other elements on the web site (such as text, graphics, hyperlinks, or sound) do not distract attention from the notice, and the bank either:

(A) Places the notice on a screen that consumers frequently access, such as a page on which transactions are conducted; or

(B) Places a link on a screen that consumers frequently access, such as a page on which transactions are conducted, that connects directly to the notice and is labeled appropriately to convey the importance, nature, and relevance of the notice.

(c) *Collect* means to obtain information that the bank organizes or can retrieve by the name of an individual or by identifying number, symbol, or other identifying particular assigned to the individual, irrespective of the source of the underlying information.

(d) *Company* means any corporation, limited liability company, business trust, general or limited partnership, association, or similar organization.

(e)(1) *Consumer* means an individual who obtains or has obtained a financial product or service from a bank that is to be used primarily for personal, family, or household purposes, or that individual's legal representative.

(2) *Examples.* (i) An individual who applies to a bank for credit for personal, family, or household purposes is a consumer of a financial service, regardless of whether the credit is extended.

(ii) An individual who provides nonpublic personal information to a bank in order to obtain a determination about whether he or she may qualify for a loan to be used primarily for personal, family, or household purposes is a consumer of a financial service, regardless of whether the loan is extended.

(iii) An individual who provides nonpublic personal information to a bank in connection with obtaining or seeking to obtain financial, investment, or economic advisory services is a consumer regardless of whether the bank establishes a continuing advisory relationship.

(iv) If a bank holds ownership or servicing rights to an individual's loan that is used primarily for personal, family, or household purposes, the individual is the bank's consumer, even if the bank holds those rights in conjunction with one or more other institutions. (The individual is also a consumer with respect to the other financial institutions involved.) An individual who has a loan in which a bank has ownership or servicing rights is the bank's consumer, even if the bank, or another institution with those rights, hires an agent to collect on the loan.

(v) An individual who is a consumer of another financial institution is not a bank's consumer solely because the bank acts as agent for, or provides processing or other services to, that financial institution.

(vi) An individual is not a bank's consumer solely because he or she has designated the bank as trustee for a trust.

(vii) An individual is not a bank's consumer solely because he or she is a beneficiary of a trust for which the bank is a trustee.

(viii) An individual is not a bank's consumer solely because he or she is a participant or a beneficiary of an employee benefit plan that the bank sponsors or for which the bank acts as a trustee or fiduciary.

(f) *Consumer reporting agency* has the same meaning as in section 603(f) of the Fair Credit Reporting Act (15 U.S.C. 1681a(f)).

(g) *Control* of a company means:

(1) Ownership, control, or power to vote 25 percent or more of the outstanding shares of any class of voting security of the company, directly or indirectly, or acting through one or more other persons;

(2) Control in any manner over the election of a majority of the directors, trustees, or general partners (or individuals exercising similar functions) of the company; or

(3) The power to exercise, directly or indirectly, a controlling influence over the management or policies of the company, as the OCC determines.

(h) *Customer* means a consumer who has a customer relationship with a bank.

(i)(1) *Customer relationship* means a continuing relationship between a consumer and a bank under which the bank provides one or more financial products or services to the consumer that are to be used primarily for personal, family, or household purposes.

(2) *Examples.* (i) *Continuing relationship.* A consumer has a continuing relationship with a bank if the consumer:

(A) Has a deposit or investment account with the bank;

(B) Obtains a loan from the bank;

(C) Has a loan for which you own the servicing rights;

(D) Purchases an insurance product from the bank;

(E) Holds an investment product through the bank, such as when the bank acts as a custodian for securities or for assets in an Individual Retirement Arrangement;

(F) Enters into an agreement or understanding with the bank whereby the bank undertakes to arrange or broker a home mortgage loan for the consumer;

(G) Enters into a lease of personal property with the bank; or

(H) Obtains financial, investment, or economic advisory services from the bank for a fee.

(ii) *No continuing relationship.* A consumer does not, however, have a continuing relationship with a bank if:

(A) The consumer obtains a financial product or service only in isolated transactions, such as using the bank's ATM to withdraw cash from an account at another financial institution or purchasing a cashier's check or money order;

(B) The bank sells the consumer's loan and does not retain the rights to service that loan; or

(C) The bank sells the consumer airline tickets, travel insurance, or traveler's checks in isolated transactions.

(j) *Federal functional regulator* means:

(1) The Board of Governors of the Federal Reserve System;

(2) The Office of the Comptroller of the Currency;

(3) The Board of Directors of the Federal Deposit Insurance Corporation;

(4) The Director of the Office of Thrift Supervision;

(5) The National Credit Union Administration Board; and

(6) The Securities and Exchange Commission.

(k)(1) *Financial institution* means any institution the business of which is engaging in activities that are financial in nature or incidental to such financial activities as described in section 4(k) of the Bank Holding Company Act of 1956 (12 U.S.C. 1843(k)).

(2) *Financial institution* does not include:

(i) Any person or entity with respect to any financial activity that is subject to the jurisdiction of the Commodity Futures Trading Commission under the Commodity Exchange Act (7 U.S.C. 1 *et seq.*);

(ii) The Federal Agricultural Mortgage Corporation or any entity chartered and operating under the Farm Credit Act of 1971 (12 U.S.C. 2001 *et seq.*); or

(iii) Institutions chartered by Congress specifically to engage in securitizations, secondary market sales (including sales of servicing rights), or similar transactions related to a transaction of a consumer, as long as such institutions do not sell or transfer nonpublic personal information to a nonaffiliated third party.

(l)(1) *Financial product or service* means any product or service that a financial holding company could offer by engaging in an activity that is financial in nature or incidental to such a financial activity under section 4(k) of the Bank Holding Company Act of 1956 (12 U.S.C. 1843(k)).

(2) *Financial service* includes a bank's evaluation or brokerage of information that the bank collects in connection with a request or an application from a consumer for a financial product or service.

(m)(1) *Nonaffiliated third party* means any person except:

(i) A bank's affiliate; or

(ii) A person employed jointly by a bank and any company that is not the bank's affiliate (but *nonaffiliated third party* includes the other company that jointly employs the person).

(2) *Nonaffiliated third party* includes any company that is an affiliate solely by virtue of a bank's (or its affiliate's) direct or indirect ownership or control of the company in conducting merchant banking or investment banking activities of the type described in section 4(k)(4)(H) or insurance company investment activities of the type described in section 4(k)(4)(I) of the Bank Holding Company Act of 1956 (12 U.S.C. 1843(k)(4)(H) and (I)).

(n)(1) *Nonpublic personal information* means:

(i) Personally identifiable financial information; and

(ii) Any list, description, or other grouping of consumers (and publicly available information pertaining to them) that is derived using any personally identifiable financial information that is not publicly available.

(2) *Nonpublic personal information* does not include:

(i) Publicly available information, except as included on a list described in paragraph (n)(1)(ii) of this section; or

(ii) Any list, description, or other grouping of consumers (and publicly available information pertaining to them) that is derived without using any personally identifiable financial information that is not publicly available.

(3) *Examples of lists.* (i) Nonpublic personal information includes any list of individuals' names and street addresses that is derived in whole or in part using personally identifiable financial information that is not publicly available, such as account numbers.

(ii) Nonpublic personal information does not include any list of individuals' names and addresses that contains only publicly available information, is not derived in whole or in part using personally identifiable financial information that is not publicly available, and is not disclosed in a manner that indicates that any of the individuals on the list is a consumer of a financial institution.

(o)(1) *Personally identifiable financial information* means any information:

(i) A consumer provides to a bank to obtain a financial product or service from the bank;

(ii) About a consumer resulting from any transaction involving a financial product or service between a bank and a consumer; or

(iii) The bank otherwise obtains about a consumer in connection with providing a financial product or service to that consumer.

(2) *Examples.* (i) *Information included.* Personally identifiable financial information includes:

(A) Information a consumer provides to a bank on an application to obtain a loan, credit card, or other financial product or service;

(B) Account balance information, payment history, overdraft history, and credit or debit card purchase information;

(C) The fact that an individual is or has been one of the bank's customers or has obtained a financial product or service from the bank;

(D) Any information about the bank's consumer if it is disclosed in a manner that indicates that the individual is or has been the bank's consumer;

(E) Any information that a consumer provides to a bank or that the bank or its agent otherwise obtains in connection with collecting on a loan or servicing a loan;

(F) Any information the bank collects through an Internet ''cookie'' (an information collecting device from a web server); and

(G) Information from a consumer report.

(ii) *Information not included.* Personally identifiable financial information does not include:

(A) A list of names and addresses of customers of an entity that is not a financial institution; and

(B) Information that does not identify a consumer, such as aggregate information or blind data that does not contain personal identifiers such as account numbers, names, or addresses.

(p)(1) *Publicly available information* means any information that a bank has a reasonable basis to believe is lawfully made available to the general public from:

(i) Federal, State, or local government records;

(ii) Widely distributed media; or

(iii) Disclosures to the general public that are required to be made by Federal, State, or local law.

(2) *Reasonable basis.* A bank has a reasonable basis to believe that information is lawfully made available to the general public if the bank has taken steps to determine:

(i) That the information is of the type that is available to the general public; and

(ii) Whether an individual can direct that the information not be made available to the general public and, if so, that the bank's consumer has not done so.

(3) *Examples.* (i) *Government records.* Publicly available information in government records includes information in government real estate records and security interest filings.

(ii) *Widely distributed media.* Publicly available information from widely distributed media includes information from a telephone book, a television or radio program, a newspaper, or a web site that is available to the general public on an unrestricted basis. A web site is not restricted merely because an Internet service provider or a site operator requires a fee or a password, so long as access is available to the general public.

(iii) *Reasonable basis.* (A) A bank has a reasonable basis to believe that mortgage information is lawfully made available to the general public if the bank has determined that the information is of the type included on the public record in the jurisdiction where the mortgage would be recorded.

(B) A bank has a reasonable basis to believe that an individual's telephone number is lawfully made available to the general public if the bank has located the telephone number in the telephone book or the consumer has informed you that the telephone number is not unlisted.

Subpart A—Privacy and Opt Out Notices

§ 40.4 Initial privacy notice to consumers required.

(a) *Initial notice requirement.* A bank must provide a clear and conspicuous notice that accurately reflects its privacy policies and practices to:

(1) *Customer.* An individual who becomes the bank's customer, not later than when the bank establishes a customer relationship, except as provided in paragraph (e) of this section; and

(2) *Consumer.* A consumer, before the bank discloses any nonpublic personal information about the consumer to any nonaffiliated third party, if the bank makes such a disclosure other than as authorized by §§ 40.14 and 40.15.

(b) *When initial notice to a consumer is not required.* A bank is not required to provide an initial notice to a consumer under paragraph (a) of this section if:

(1) The bank does not disclose any nonpublic personal information about the consumer to any nonaffiliated third party, other than as authorized by §§ 40.14 and 40.15; and

(2) The bank does not have a customer relationship with the consumer.

(c) *When the bank establishes a customer relationship.* (1) *General rule.* A bank establishes a customer relationship when it and the consumer enter into a continuing relationship.

(2) *Special rule for loans.* A bank establishes a customer relationship with a consumer when the bank originates a loan to the consumer for personal, family, or household purposes. If the bank subsequently transfers the servicing rights to that loan to another financial institution, the customer relationship transfers with the servicing rights.

(3)(i) *Examples of establishing customer relationship.* A bank establishes a customer relationship when the consumer:

(A) Opens a credit card account with the bank;

(B) Executes the contract to open a deposit account with the bank, obtains credit from the bank, or purchases insurance from the bank;

(C) Agrees to obtain financial, economic, or investment advisory services from the bank for a fee; or

(D) Becomes the bank's client for the purpose of the bank's providing credit counseling or tax preparation services.

(ii) *Examples of loan rule.* A bank establishes a customer relationship with a consumer who obtains a loan for personal, family, or household purposes when the bank:

(A) Originates the loan to the consumer; or

(B) Purchases the servicing rights to the consumer's loan.

(d) *Existing customers.* When an existing customer obtains a new financial product or service from a bank that is to be used primarily for personal, family, or household purposes, the bank satisfies the initial notice requirements of paragraph (a) of this section as follows:

(1) The bank may provide a revised privacy notice, under § 40.8, that covers the customer's new financial product or service; or

(2) If the initial, revised, or annual notice that the bank most recently provided to that customer was accurate with respect to the new financial product or service, the bank does not need to provide a new privacy notice under paragraph (a) of this section.

(e) *Exceptions to allow subsequent delivery of notice.* (1) A bank may provide the initial notice required by paragraph (a)(1) of this section within a reasonable time after the bank establishes a customer relationship if:

(i) Establishing the customer relationship is not at the customer's election; or

(ii) Providing notice not later than when the bank establishes a customer relationship would substantially delay the customer's transaction and the customer agrees to receive the notice at a later time.

(2) *Examples of exceptions.* (i) *Not at customer's election.* Establishing a customer relationship is not at the customer's election if a bank acquires a customer's deposit liability or the servicing rights to a customer's loan from another financial institution and the customer does not have a choice about the bank's acquisition.

(ii) *Substantial delay of customer's transaction.* Providing notice not later than when a bank establishes a customer relationship would substantially delay the customer's transaction when:

(A) The bank and the individual agree over the telephone to enter into a customer relationship involving prompt delivery of the financial product or service; or

(B) The bank establishes a customer relationship with an individual under a program authorized by Title IV of the Higher Education Act of 1965 (20 U.S.C. 1070 *et seq.*) or similar student loan programs where loan proceeds are disbursed promptly without prior communication between the bank and the customer.

(iii) *No substantial delay of customer's transaction.* Providing notice not later than when a bank establishes a customer relationship would not substantially delay the customer's transaction when the relationship is initiated in person at the bank's office or through other means by which the customer may view the notice, such as on a web site.

(f) *Delivery.* When a bank is required to deliver an initial privacy notice by this section, the bank must deliver it according to § 40.9. If the bank uses a short-form initial notice for non-customers according to § 40.6(d), the bank may deliver its privacy notice according to § 40.6(d)(3).

§ 40.5 Annual privacy notice to customers required.

(a)(1) *General rule.* A bank must provide a clear and conspicuous notice to customers that accurately reflects its privacy policies and practices not less

than annually during the continuation of the customer relationship. *Annually* means at least once in any period of 12 consecutive months during which that relationship exists. A bank may define the 12-consecutive-month period, but the bank must apply it to the customer on a consistent basis.

(2) *Example.* A bank provides a notice annually if it defines the 12-consecutive-month period as a calendar year and provides the annual notice to the customer once in each calendar year following the calendar year in which the bank provided the initial notice. For example, if a customer opens an account on any day of year 1, the bank must provide an annual notice to that customer by December 31 of year 2.

(b)(1) *Termination of customer relationship.* A bank is not required to provide an annual notice to a former customer.

(2) *Examples.* A bank's customer becomes a former customer when:

(i) In the case of a deposit account, the account is inactive under the bank's policies;

(ii) In the case of a closed-end loan, the customer pays the loan in full, the bank charges off the loan, or the bank sells the loan without retaining servicing rights;

(iii) In the case of a credit card relationship or other open-end credit relationship, the bank no longer provides any statements or notices to the customer concerning that relationship or the bank sells the credit card receivables without retaining servicing rights; or

(iv) The bank has not communicated with the customer about the relationship for a period of 12 consecutive months, other than to provide annual privacy notices or promotional material.

(c) *Special rule for loans.* If a bank does not have a customer relationship with a consumer under the special rule for loans in § 40.4(c)(2), then the bank need not provide an annual notice to that consumer under this section.

(d) *Delivery.* When a bank is required to deliver an annual privacy notice by this section, the bank must deliver it according to § 40.9.

§ 40.6 Information to be included in privacy notices.

(a) *General rule.* The initial, annual, and revised privacy notices that a bank provides under §§ 40.4, 40.5, and 40.8 must include each of the following items of information, in addition to any other information the bank wishes to provide, that applies to the bank and to the consumers to whom the bank sends its privacy notice:

(1) The categories of nonpublic personal information that the bank collects;

(2) The categories of nonpublic personal information that the bank discloses;

(3) The categories of affiliates and nonaffiliated third parties to whom the bank discloses nonpublic personal information, other than those parties to whom the bank discloses information under §§ 40.14 and 40.15;

(4) The categories of nonpublic personal information about the bank's former customers that the bank discloses and the categories of affiliates and nonaffiliated third parties to whom the bank discloses nonpublic personal information about the bank's former customers, other than those parties to whom the bank discloses information under §§ 40.14 and 40.15;

(5) If a bank discloses nonpublic personal information to a nonaffiliated third party under § 40.13 (and no other exception in §§ 40.14 or 40.15 applies to that disclosure), a separate statement of the categories of information the bank discloses and the categories of third parties with whom the bank has contracted;

(6) An explanation of the consumer's right under § 40.10(a) to opt out of the disclosure of nonpublic personal information to nonaffiliated third parties, including the method(s) by which the consumer may exercise that right at that time;

(7) Any disclosures that the bank makes under section 603(d)(2)(A)(iii) of the Fair Credit Reporting Act (15 U.S.C. 1681a(d)(2)(A)(iii)) (that is, notices regarding the ability to opt out of disclosures of information among affiliates);

(8) The bank's policies and practices with respect to protecting the confidentiality and security of nonpublic personal information; and

(9) Any disclosure that the bank makes under paragraph (b) of this section.

(b) *Description of nonaffiliated third parties subject to exceptions.* If a bank discloses nonpublic personal information to third parties as authorized under §§ 40.14 and 40.15, the bank is not required to list those exceptions in the initial or annual privacy notices required by §§ 40.4 and 40.5. When describing the categories with respect to those parties, the bank is required to state only that it makes disclosures to other nonaffiliated third parties as permitted by law.

(c) *Examples.* (1) *Categories of nonpublic personal information that the bank collects.* A bank satisfies the requirement to categorize the nonpublic personal information that it collects if it lists the following categories, as applicable:

(i) Information from the consumer;

(ii) Information about the consumer's transactions with the bank or its affiliates;

(iii) Information about the consumer's transactions with nonaffiliated third parties; and

(iv) Information from a consumer reporting agency.

(2) *Categories of nonpublic personal information the bank discloses.* (i) A bank satisfies the requirement to categorize the nonpublic personal information that it discloses if the bank lists the categories described in paragraph (e)(1) of this section, as applicable, and a few examples to illustrate the types of information in each category.

(ii) If a bank reserves the right to disclose all of the nonpublic personal information about consumers that it collects, it may simply state that fact without describing the categories or examples of the nonpublic personal information it discloses.

(3) *Categories of affiliates and nonaffiliated third parties to whom the bank discloses.* A bank satisfies the requirement to categorize the affiliates and nonaffiliated third parties to whom it discloses nonpublic personal information if the bank lists the following categories, as applicable, and a few examples to illustrate the types of third parties in each category:

(i) Financial service providers;

(ii) Non-financial companies; and

(iii) Others.

(4) *Disclosures under exception for service providers and joint marketers.* If a bank discloses nonpublic personal information under the exception in § 40.13 to a nonaffiliated third party to market products or services that it offers alone or jointly with another financial institution, the bank satisfies the disclosure requirement of paragraph (a)(5) of this section if it:

(i) Lists the categories of nonpublic personal information it discloses, using the same categories and examples the bank used to meet the requirements of paragraph (a)(2) of this section, as applicable; and

(ii) States whether the third party is:

(A) A service provider that performs marketing services on the bank's behalf or on behalf of the bank and another financial institution; or

(B) A financial institution with whom the bank has a joint marketing agreement.

(5) *Simplified notices.* If a bank does not disclose, and does not wish to reserve the right to disclose, nonpublic

personal information about customers or former customers to affiliates or nonaffiliated third parties except as authorized under §§ 40.14 and 40.15, the bank may simply state that fact, in addition to the information it must provide under paragraphs (a)(1), (a)(8), (a)(9), and (b) of this section.

(6) *Confidentiality and security.* A bank describes its policies and practices with respect to protecting the confidentiality and security of nonpublic personal information if it does both of the following:

(i) Describes in general terms who is authorized to have access to the information; and

(ii) States whether the bank has security practices and procedures in place to ensure the confidentiality of the information in accordance with the bank's policy. The bank is not required to describe technical information about the safeguards it uses.

(d) *Short-form initial notice with opt out notice for non-customers.* (1) A bank may satisfy the initial notice requirements in §§ 40.4(a)(2), 40.7(b), and 40.7(c) for a consumer who is not a customer by providing a short-form initial notice at the same time as the bank delivers an opt out notice as required in § 40.7.

(2) A short-form initial notice must:

(i) Be clear and conspicuous;

(ii) State that the bank's privacy notice is available upon request; and

(iii) Explain a reasonable means by which the consumer may obtain that notice.

(3) The bank must deliver its short-form initial notice according to § 40.9. The bank is not required to deliver its privacy notice with its short-form initial notice. The bank instead may simply provide the consumer a reasonable means to obtain its privacy notice. If a consumer who receives the bank's short-form notice requests the bank's privacy notice, the bank must deliver its privacy notice according to § 40.9.

(4) *Examples of obtaining privacy notice.* The bank provides a reasonable means by which a consumer may obtain a copy of its privacy notice if the bank:

(i) Provides a toll-free telephone number that the consumer may call to request the notice; or

(ii) For a consumer who conducts business in person at the bank's office, maintain copies of the notice on hand that the bank provides to the consumer immediately upon request.

(e) *Future disclosures.* The bank's notice may include:

(1) Categories of nonpublic personal information that the bank reserves the right to disclose in the future, but do not currently disclose; and

(2) Categories of affiliates or nonaffiliated third parties to whom the bank reserves the right in the future to disclose, but to whom the bank does not currently disclose, nonpublic personal information.

(f) *Sample clauses.* Sample clauses illustrating some of the notice content required by this section are included in Appendix A of this part.

§ 40.7 Form of opt out notice to consumers; opt out methods.

(a) (1) *Form of opt out notice.* If a bank is required to provide an opt out notice under § 40.10(a), it must provide a clear and conspicuous notice to each of its consumers that accurately explains the right to opt out under that section. The notice must state:

(i) That the bank discloses or reserves the right to disclose nonpublic personal information about its consumer to a nonaffiliated third party;

(ii) That the consumer has the right to opt out of that disclosure; and

(iii) A reasonable means by which the consumer may exercise the opt out right.

(2) *Examples.* (i) *Adequate opt out notice.* A bank provides adequate notice that the consumer can opt out of the disclosure of nonpublic personal information to a nonaffiliated third party if the bank:

(A) Identifies all of the categories of nonpublic personal information that it discloses or reserves the right to disclose, and all of the categories of nonaffiliated third parties to which the bank discloses the information, as described in § 40.6(a)(2) and (3), and states that the consumer can opt out of the disclosure of that information; and

(B) Identifies the financial products or services that the consumer obtains from the bank, either singly or jointly, to which the opt out direction would apply.

(ii) *Reasonable opt out means.* A bank provides a reasonable means to exercise an opt out right if it:

(A) Designates check-off boxes in a prominent position on the relevant forms with the opt out notice;

(B) Includes a reply form together with the opt out notice;

(C) Provides an electronic means to opt out, such as a form that can be sent via electronic mail or a process at the bank's web site, if the consumer agrees to the electronic delivery of information; or

(D) Provides a toll-free telephone number that consumers may call to opt out.

(iii) *Unreasonable opt out means.* A bank *does not* provide a reasonable means of opting out if:

(A) The only means of opting out is for the consumer to write his or her own letter to exercise that opt out right; or

(B) The only means of opting out as described in any notice subsequent to the initial notice is to use a check-off box that the bank provided with the initial notice but did not include with the subsequent notice.

(iv) *Specific opt out means.* A bank may require each consumer to opt out through a specific means, as long as that means is reasonable for that consumer.

(b) *Same form as initial notice permitted.* A bank may provide the opt out notice together with or on the same written or electronic form as the initial notice the bank provides in accordance with § 40.4.

(c) *Initial notice required when opt out notice delivered subsequent to initial notice.* If a bank provides the opt out notice later than required for the initial notice in accordance with § 40.4, the bank must also include a copy of the initial notice with the opt out notice in writing or, if the consumer agrees, electronically.

(d) *Joint relationships.* (1) If two or more consumers jointly obtain a financial product or service from a bank, the bank may provide a single opt out notice. The bank's opt out notice must explain how the bank will treat an opt out direction by a joint consumer (as explained in paragraph (d)(5) of this section).

(2) Any of the joint consumers may exercise the right to opt out. The bank may either:

(i) Treat an opt out direction by a joint consumer as applying to all of the associated joint consumers; or

(ii) Permit each joint consumer to opt out separately.

(3) If a bank permits each joint consumer to opt out separately, the bank must permit one of the joint consumers to opt out on behalf of all of the joint consumers.

(4) A bank may not require *all* joint consumers to opt out before it implements *any* opt out direction.

(5) *Example.* If John and Mary have a joint checking account with a bank and arranges for the bank to send statements to John's address, the bank may do any of the following, but it must explain in its opt out notice which opt out policy the bank will follow:

(i) Send a single opt out notice to John's address, but the bank must accept an opt out direction from either John or Mary.

(ii) Treat an opt out direction by either John or Mary as applying to the entire account. If the bank does so and John opts out, the bank may not require

Mary to opt out as well before implementing John's opt out direction.

(iii) Permit John and Mary to make different opt out directions. If the bank does so:

(A) It must permit John and Mary to opt out for each other;

(B) If both opt out, the bank must permit both of them to notify it in a single response (such as on a form or through a telephone call); and

(C) If John opts out and Mary does not, the bank may only disclose nonpublic personal information about Mary, but not about John and not about John and Mary jointly.

(e) *Time to comply with opt out.* A bank must comply with a consumer's opt out direction as soon as reasonably practicable after the bank receives it.

(f) *Continuing right to opt out.* A consumer may exercise the right to opt out at any time.

(g) *Duration of consumer's opt out direction.* (1) A consumer's direction to opt out under this section is effective until the consumer revokes it in writing or, if the consumer agrees, electronically.

(2) When a customer relationship terminates, the customer's opt out direction continues to apply to the nonpublic personal information that the bank collected during or related to that relationship. If the individual subsequently establishes a new customer relationship with the bank, the opt out direction that applied to the former relationship does not apply to the new relationship.

(h) *Delivery.* When a bank is required to deliver an opt out notice by this section, the bank must deliver it according to § 40.9.

§ 40.8 Revised privacy notices.

(a) *General rule.* Except as otherwise authorized in this part, a bank must not, directly or through any affiliate, disclose any nonpublic personal information about a consumer to a nonaffiliated third party other than as described in the initial notice that the bank provided to that consumer under § 40.4, unless:

(1) The bank has provided to the consumer a clear and conspicuous revised notice that accurately describes its policies and practices;

(2) The bank has provided to the consumer a new opt out notice;

(3) The bank has given the consumer a reasonable opportunity, before the bank discloses the information to the nonaffiliated third party, to opt out of the disclosure; and

(4) The consumer does not opt out.

(b) *Examples.* (1) Except as otherwise permitted by §§ 40.13, 40.14, and 40.15, a bank must provide a revised notice before it:

(i) Discloses a new category of nonpublic personal information to any nonaffiliated third party;

(ii) Discloses nonpublic personal information to a new category of nonaffiliated third party; or

(iii) Disclose nonpublic personal information about a former customer to a nonaffiliated third party, if that former customer has not had the opportunity to exercise an opt out right regarding that disclosure.

(2) A revised notice is not required if the bank discloses nonpublic personal information to a new nonaffiliated third party that the bank adequately described in its prior notice.

(c) *Delivery.* When a bank is required to deliver a revised privacy notice by this section, the bank must deliver it according to § 40.9.

§ 40.9 Delivering privacy and opt out notices.

(a) *How to provide notices.* A bank must provide any privacy notices and opt out notices, including short-form initial notices, that this part requires so that each consumer can reasonably be expected to receive actual notice in writing or, if the consumer agrees, electronically.

(b) (1) *Examples of reasonable expectation of actual notice.* A bank may reasonably expect that a consumer will receive actual notice if the bank:

(i) Hand-delivers a printed copy of the notice to the consumer;

(ii) Mails a printed copy of the notice to the last known address of the consumer;

(iii) For the consumer who conducts transactions electronically, posts the notice on the electronic site and requires the consumer to acknowledge receipt of the notice as a necessary step to obtaining a particular financial product or service;

(iv) For an isolated transaction with the consumer, such as an ATM transaction, posts the notice on the ATM screen and requires the consumer to acknowledge receipt of the notice as a necessary step to obtaining the particular financial product or service.

(2) *Examples of unreasonable expectation of actual notice.* A bank may not, however, reasonably expect that a consumer will receive actual notice of its privacy policies and practices if it:

(i) Only posts a sign in its branch or office or generally publish advertisements of its privacy policies and practices;

(ii) Sends the notice via electronic mail to a consumer who does not obtain a financial product or service from the bank electronically.

(c) *Annual notices only.* A bank may reasonably expect that a customer will receive actual notice of the bank's annual privacy notice if:

(1) The customer uses the bank's web site to access financial products and services electronically and agrees to receive notices at the web site and the bank posts its current privacy notice continuously in a clear and conspicuous manner on the web site; or

(2) The customer has requested that the bank refrain from sending any information regarding the customer relationship, and the bank's current privacy notice remains available to the customer upon request.

(d) *Oral description of notice insufficient.* A bank may not provide any notice required by this part solely by orally explaining the notice, either in person or over the telephone.

(e) *Retention or accessibility of notices for customers.* (1) For customers only, a bank must provide the initial notice required by § 40.4(a)(1), the annual notice required by § 40.5(a), and the revised notice required by § 40.8 so that the customer can retain them or obtain them later in writing or, if the customer agrees, electronically.

(2) *Examples of retention or accessibility.* A bank provides a privacy notice to the customer so that the customer can retain it or obtain it later if the bank:

(i) Hand-delivers a printed copy of the notice to the customer;

(ii) Mails a printed copy of the notice to the last known address of the customer; or

(iii) Makes its current privacy notice available on a web site (or a link to another web site) for the customer who obtains a financial product or service electronically and agrees to receive the notice at the web site.

(f) *Joint notice with other financial institutions.* A bank may provide a joint notice from it and one or more of its affiliates or other financial institutions, as identified in the notice, as long as the notice is accurate with respect to the bank and the other institutions.

(g) *Joint relationships.* If two or more consumers jointly obtain a financial product or service from a bank, the bank may satisfy the initial, annual, and revised notice requirements of §§ 40.4(a), 40.5(a), and 40.8(a), respectively, by providing one notice to those consumers jointly.

Subpart B—Limits on Disclosures

§ 40.10 Limits on disclosure of non-public personal information to nonaffiliated third parties.

(a)(1) *Conditions for disclosure.* Except as otherwise authorized in this

part, a bank may not, directly or through any affiliate, disclose any nonpublic personal information about a consumer to a nonaffiliated third party unless:

(i) The bank has provided to the consumer an initial notice as required under § 40.4;

(ii) The bank has provided to the consumer an opt out notice as required in § 40.7;

(iii) The bank has given the consumer a reasonable opportunity, before it discloses the information to the nonaffiliated third party, to opt out of the disclosure; and

(iv) The consumer does not opt out.

(2) *Opt out definition.* Opt out means a direction by the consumer that the bank not disclose nonpublic personal information about that consumer to a nonaffiliated third party, other than as permitted by §§ 40.13, 40.14, and 40.15.

(3) *Examples of reasonable opportunity to opt out.* A bank provides a consumer with a reasonable opportunity to opt out if:

(i) *By mail.* The bank mails the notices required in paragraph (a)(1) of this section to the consumer and allows the consumer to opt out by mailing a form, calling a toll-free telephone number, or any other reasonable means within 30 days from the date the bank mailed the notices.

(ii) *By electronic means.* A customer opens an on-line account with a bank and agrees to receive the notices required in paragraph (a)(1) of this section electronically, and the bank allows the customer to opt out by any reasonable means within 30 days after the date that the customer acknowledges receipt of the notices in conjunction with opening the account.

(iii) *Isolated transaction with consumer.* For an isolated transaction, such as the purchase of a cashier's check by a consumer, a bank provides the consumer with a reasonable opportunity to opt out if the bank provides the notices required in paragraph (a)(1) of this section at the time of the transaction and requests that the consumer decide, as a necessary part of the transaction, whether to opt out before completing the transaction.

(b) *Application of opt out to all consumers and all nonpublic personal information.* (1) A bank must comply with this section, regardless of whether the bank and the consumer have established a customer relationship.

(2) Unless a bank complies with this section, the bank may not, directly or through any affiliate, disclose any nonpublic personal information about a consumer that the bank has collected, regardless of whether the bank collected it before or after receiving the direction to opt out from the consumer.

(c) *Partial opt out.* A bank may allow a consumer to select certain nonpublic personal information or certain nonaffiliated third parties with respect to which the consumer wishes to opt out.

§ 40.11 Limits on redisclosure and reuse of information.

(a)(1) *Information the bank receives under an exception.* If a bank receives nonpublic personal information from a nonaffiliated financial institution under an exception in §§ 40.14 or 40.15 of this part, the bank's disclosure and use of that information is limited as follows:

(i) The bank may disclose the information to the affiliates of the financial institution from which the bank received the information;

(ii) The bank may disclose the information to its affiliates, but the bank's affiliates may, in turn, disclose and use the information only to the extent that the bank may disclose and use the information; and

(iii) The bank may disclose and use the information pursuant to an exception in §§ 40.14 or 40.15 in the ordinary course of business to carry out the activity covered by the exception under which the bank received the information.

(2) *Example.* If a bank receives a customer list from a nonaffiliated financial institution in order to provide account processing services under the exception in § 40.14(a), the bank may disclose that information under any exception in §§ 40.14 or 40.15 in the ordinary course of business in order to provide those services. For example, the bank could disclose the information in response to a properly authorized subpoena or to its attorneys, accountants, and auditors. The bank could not disclose that information to a third party for marketing purposes or use that information for its own marketing purposes.

(b)(1) *Information a bank receives outside of an exception.* If a bank receives nonpublic personal information from a nonaffiliated financial institution other than under an exception in §§ 40.14 or 40.15 of this part, the bank may disclose the information only:

(i) To the affiliates of the financial institution from which the bank received the information;

(ii) To its affiliates, but its affiliates may, in turn, disclose the information only to the extent that the bank can disclose the information; and

(iii) To any other person, if the disclosure would be lawful if made directly to that person by the financial institution from which the bank received the information.

(2) *Example.* If a bank obtains a customer list from a nonaffiliated financial institution outside of the exceptions in §§ 40.14 and 40.15:

(i) The bank may use that list for its own purposes; and

(ii) The bank may disclose that list to another nonaffiliated third party only if the financial institution from which the bank purchased the list could have lawfully disclosed the list to that third party. That is, the bank may disclose the list in accordance with the privacy policy of the financial institution from which the bank received the list, as limited by the opt out direction of each consumer whose nonpublic personal information the bank intends to disclose and the bank may disclose the list in accordance with an exception in §§ 40.14 or 40.15, such as to the bank's attorneys or accountants.

(c) *Information a bank discloses under an exception.* If a bank discloses nonpublic personal information to a nonaffiliated third party under an exception in §§ 40.14 or 40.15 of this part, the third party may disclose and use that information only as follows:

(1) The third party may disclose the information to the bank's affiliates;

(2) The third party may disclose the information to its affiliates, but its affiliates may, in turn, disclose and use the information only to the extent that the third party may disclose and use the information; and

(3) The third party may disclose and use the information pursuant to an exception in §§ 40.14 or 40.15 in the ordinary course of business to carry out the activity covered by the exception under which it received the information.

(d) *Information a bank discloses outside of an exception.* If a bank discloses nonpublic personal information to a nonaffiliated third party other than under an exception in §§ 40.14 or 40.15 of this part, the third party may disclose the information only:

(1) To the bank's affiliates;

(2) To the third party's affiliates, but the third party's affiliates, in turn, may disclose the information only to the extent the third party can disclose the information; and

(3) To any other person, if the disclosure would be lawful if the bank made it directly to that person.

§ 40.12 Limits on sharing account number information for marketing purposes.

(a) *General prohibition on disclosure of account numbers.* A bank must not, directly or through an affiliate, disclose, other than to a consumer reporting

agency, an account number or similar form of access number or access code for a consumer's credit card account, deposit account, or transaction account to any nonaffiliated third party for use in telemarketing, direct mail marketing, or other marketing through electronic mail to the consumer.

(b) *Exceptions.* Paragraph (a) of this section does not apply if a bank discloses an account number or similar form of access number or access code:

(1) To the bank's agent or service provider solely in order to perform marketing for the bank's own products or services, as long as the agent or service provider is not authorized to directly initiate charges to the account; or

(2) To a participant in a private label credit card program or an affinity or similar program where the participants in the program are identified to the customer when the customer enters into the program.

(c) *Examples.* (1) *Account number.* An account number, or similar form of access number or access code, does not include a number or code in an encrypted form, as long as the bank does not provide the recipient with a means to decode the number or code.

(2) *Transaction account.* A transaction account is an account other than a deposit account or a credit card account. A transaction account does not include an account to which third parties cannot initiate charges.

Subpart C—Exceptions

§ 40.13 Exception to opt out requirements for service providers and joint marketing.

(a) *General rule.* (1) The opt out requirements in §§ 40.7 and 40.10 do not apply when a bank provides nonpublic personal information to a nonaffiliated third party to perform services for the bank or functions on the bank's behalf, if the bank:

(i) Provides the initial notice in accordance with § 40.4; and

(ii) Enters into a contractual agreement with the third party that prohibits the third party from disclosing or using the information other than to carry out the purposes for which the bank disclosed the information, including use under an exception in § 40.14 or 40.15 in the ordinary course of business to carry out those purposes.

(2) *Example.* If a bank discloses nonpublic personal information under this section to a financial institution with which the bank performs joint marketing, the bank's contractual agreement with that institution meets the requirements of paragraph (a)(1)(ii) of this section if it prohibits the institution from disclosing or using the nonpublic personal information except as necessary to carry out the joint marketing or under an exception in §§ 40.14 or 40.15 in the ordinary course of business to carry out that joint marketing.

(b) *Service may include joint marketing.* The services a nonaffiliated third party performs for a bank under paragraph (a) of this section may include marketing of the bank's own products or services or marketing of financial products or services offered pursuant to joint agreements between the bank and one or more financial institutions.

(c) *Definition of joint agreement.* For purposes of this section, *joint agreement* means a written contract pursuant to which a bank and one or more financial institutions jointly offer, endorse, or sponsor a financial product or service.

§ 40.14 Exceptions to notice and opt out requirements for processing and servicing transactions.

(a) *Exceptions for processing transactions at consumer's request.* The requirements for initial notice in § 40.4(a)(2), the opt out in §§ 40.7 and 40.10 and service providers and joint marketing in § 40.13 do not apply if the bank discloses nonpublic personal information as necessary to effect, administer, or enforce a transaction that a consumer requests or authorizes, or in connection with:

(1) Servicing or processing a financial product or service that a consumer requests or authorizes;

(2) Maintaining or servicing the consumer's account with a bank, or with another entity as part of a private label credit card program or other extension of credit on behalf of such entity; or

(3) A proposed or actual securitization, secondary market sale (including sales of servicing rights), or similar transaction related to a transaction of the consumer.

(b) *Necessary to effect, administer, or enforce a transaction* means that the disclosure is:

(1) Required, or is one of the lawful or appropriate methods, to enforce the bank's rights or the rights of other persons engaged in carrying out the financial transaction or providing the product or service; or

(2) Required, or is a usual, appropriate or acceptable method:

(i) To carry out the transaction or the product or service business of which the transaction is a part, and record, service, or maintain the consumer's account in the ordinary course of providing the financial service or financial product;

(ii) To administer or service benefits or claims relating to the transaction or the product or service business of which it is a part;

(iii) To provide a confirmation, statement, or other record of the transaction, or information on the status or value of the financial service or financial product to the consumer or the consumer's agent or broker;

(iv) To accrue or recognize incentives or bonuses associated with the transaction that are provided by a bank or any other party;

(v) To underwrite insurance at the consumer's request or for reinsurance purposes, or for any of the following purposes as they relate to a consumer's insurance: account administration, reporting, investigating, or preventing fraud or material misrepresentation, processing premium payments, processing insurance claims, administering insurance benefits (including utilization review activities), participating in research projects, or as otherwise required or specifically permitted by Federal or State law;

(vi) In connection with:

(A) The authorization, settlement, billing, processing, clearing, transferring, reconciling or collection of amounts charged, debited, or otherwise paid using a debit, credit, or other payment card, check, or account number, or by other payment means;

(B) The transfer of receivables, accounts, or interests therein; or

(C) The audit of debit, credit, or other payment information.

§ 40.15 Other exceptions to notice and opt out requirements.

(a) *Exceptions to opt out requirements.* The requirements for initial notice to consumers in § 40.4(a)(2), the opt out in §§ 40.7 and 40.10, and service providers and joint marketing in § 40.13 do not apply when a bank discloses nonpublic personal information:

(1) With the consent or at the direction of the consumer, provided that the consumer has not revoked the consent or direction;

(2) (i) To protect the confidentiality or security of a bank's records pertaining to the consumer, service, product, or transaction;

(ii) To protect against or prevent actual or potential fraud, unauthorized transactions, claims, or other liability;

(iii) For required institutional risk control or for resolving consumer disputes or inquiries;

(iv) To persons holding a legal or beneficial interest relating to the consumer; or

(v) To persons acting in a fiduciary or representative capacity on behalf of the consumer;

(3) To provide information to insurance rate advisory organizations, guaranty funds or agencies, agencies that are rating a bank, persons that are assessing the bank's compliance with industry standards, and the bank's attorneys, accountants, and auditors;

(4) To the extent specifically permitted or required under other provisions of law and in accordance with the Right to Financial Privacy Act of 1978 (12 U.S.C. 3401 *et seq.*), to law enforcement agencies (including a federal functional regulator, the Secretary of the Treasury, with respect to 31 U.S.C. Chapter 53, Subchapter II (Records and Reports on Monetary Instruments and Transactions) and 12 U.S.C. Chapter 21 (Financial Recordkeeping), a State insurance authority, with respect to any person domiciled in that insurance authority's State that is engaged in providing insurance, and the Federal Trade Commission), self-regulatory organizations, or for an investigation on a matter related to public safety;

(5)(i) To a consumer reporting agency in accordance with the Fair Credit Reporting Act (15 U.S.C. 1681 *et seq.*); or

(ii) From a consumer report reported by a consumer reporting agency;

(6) In connection with a proposed or actual sale, merger, transfer, or exchange of all or a portion of a business or operating unit if the disclosure of nonpublic personal information concerns solely consumers of such business or unit; or

(7)(i) To comply with Federal, State, or local laws, rules and other applicable legal requirements;

(ii) To comply with a properly authorized civil, criminal, or regulatory investigation, or subpoena or summons by Federal, State, or local authorities; or

(iii) To respond to judicial process or government regulatory authorities having jurisdiction over a bank for examination, compliance, or other purposes as authorized by law.

(b) *Examples of consent and revocation of consent.* (1) A consumer may specifically consent to a bank's disclosure to a nonaffiliated insurance company of the fact that the consumer has applied to the bank for a mortgage so that the insurance company can offer homeowner's insurance to the consumer.

(2) A consumer may revoke consent by subsequently exercising the right to opt out of future disclosures of nonpublic personal information as permitted under § 40.7(f).

Subpart D—Relation to Other Laws; Effective Date

§ 40.16 Protection of Fair Credit Reporting Act.

Nothing in this part shall be construed to modify, limit, or supersede the operation of the Fair Credit Reporting Act (15 U.S.C. 1681 *et seq.*), and no inference shall be drawn on the basis of the provisions of this part regarding whether information is transaction or experience information under section 603 of that Act.

§ 40.17 Relation to State laws.

(a) *In general.* This part shall not be construed as superseding, altering, or affecting any statute, regulation, order, or interpretation in effect in any State, except to the extent that such State statute, regulation, order, or interpretation is inconsistent with the provisions of this part, and then only to the extent of the inconsistency.

(b) *Greater protection under State law.* For purposes of this section, a State statute, regulation, order, or interpretation is not inconsistent with the provisions of this part if the protection such statute, regulation, order, or interpretation affords any consumer is greater than the protection provided under this part, as determined by the Federal Trade Commission, after consultation with the OCC, on the Federal Trade Commission's own motion, or upon the petition of any interested party.

§ 40.18 Effective date; transition rule.

(a) *Effective date.* This part is effective November 13, 2000. In order to provide sufficient time for banks to establish policies and systems to comply with the requirements of this part, the OCC has extended the time for compliance with this part until July 1, 2001.

(b)(1) *Notice requirement for consumers who are the bank's customers on the compliance date.* By July 1, 2001, a bank must have provided an initial notice, as required by § 40.4, to consumers who are the bank's customers on July 1, 2001.

(2) *Example.* A bank provides an initial notice to consumers who are its customers on July 1, 2001, if, by that date, the bank has established a system for providing an initial notice to all new customers and has mailed the initial notice to all the bank's existing customers.

(c) *Two-year grandfathering of service agreements.* Until July 1, 2002, a contract that a bank has entered into with a nonaffiliated third party to perform services for the bank or functions on the bank's behalf satisfies the provisions of § 40.13(a)(1)(ii) of this part, even if the contract does not include a requirement that the third party maintain the confidentiality of nonpublic personal information, as long as the bank entered into the agreement on or before July 1, 2000.

Appendix A to Part 40—Sample Clauses

Financial institutions, including a group of financial holding company affiliates that use a common privacy notice, may use the following sample clauses, if the clause is accurate for each institution that uses the notice. (Note that disclosure of certain information, such as assets, income, and information from a consumer reporting agency, may give rise to obligations under the Fair Credit Reporting Act, such as a requirement to permit a consumer to opt out of disclosures to affiliates or designation as a consumer reporting agency if disclosures are made to nonaffiliated third parties.)

A–1—Categories of information a bank collects (all institutions)

A bank may use this clause, as applicable, to meet the requirement of § 40.6(a)(1) to describe the categories of nonpublic personal information the bank collects.

Sample Clause A–1:

We collect nonpublic personal information about you from the following sources:

- Information we receive from you on applications or other forms;
- Information about your transactions with us, our affiliates, or others; and
- Information we receive from a consumer reporting agency.

A–2—Categories of information a bank discloses (institutions that disclose outside of the exceptions)

A bank may use one of these clauses, as applicable, to meet the requirement of § 40.6(a)(2) to describe the categories of nonpublic personal information the bank discloses. The bank may use these clauses if it discloses nonpublic personal information other than as permitted by the exceptions in §§ 40.13, 40.14, and 40.15.

Sample Clause A–2, Alternative 1:

We may disclose the following kinds of nonpublic personal information about you:

- Information we receive from you on applications or other forms, such as [*provide illustrative examples, such as "your name, address, social security number, assets, and income"*];
- Information about your transactions with us, our affiliates, or others, such as [*provide illustrative examples, such as "your account balance, payment history, parties to transactions, and credit card usage"*]; and
- Information we receive from a consumer reporting agency, such as [*provide illustrative examples, such as "your creditworthiness and credit history"*].

Sample Clause A–2, Alternative 2:

We may disclose all of the information that we collect, as described [*describe location in the notice, such as "above" or "below"*].

A–3—Categories of information a bank discloses and parties to whom the bank discloses (institutions that do not disclose outside of the exceptions)

A bank may use this clause, as applicable, to meet the requirements of §§ 40.6(a)(2), (3), and (4) to describe the categories of nonpublic personal information about customers and former customers that the bank discloses and the categories of affiliates and nonaffiliated third parties to whom the bank discloses. A bank may use this clause if the bank does not disclose nonpublic personal information to any party, other than as permitted by the exceptions in §§ 40.14, and 40.15.

Sample Clause A–3:

We do not disclose any nonpublic personal information about our customers or former customers to anyone, except as permitted by law.

A–4—Categories of parties to whom a bank discloses (institutions that disclose outside of the exceptions)

A bank may use this clause, as applicable, to meet the requirement of § 40.6(a)(3) to describe the categories of affiliates and nonaffiliated third parties to whom the bank discloses nonpublic personal information. The bank may use this clause if the bank discloses nonpublic personal information other than as permitted by the exceptions in §§ 40.13, 40.14, and 40.15, as well as when permitted by the exceptions in §§ 40.14 and 40.15.

Sample Clause A–4:

We may disclose nonpublic personal information about you to the following types of third parties:

- Financial service providers, such as [*provide illustrative examples, such as ''mortgage bankers, securities broker-dealers, and insurance agents''*];
- Non-financial companies, such as [*provide illustrative examples, such as ''retailers, direct marketers, airlines, and publishers''*]; and
- Others, such as [*provide illustrative examples, such as ''non-profit organizations''*].

We may also disclose nonpublic personal information about you to nonaffiliated third parties as permitted by law.

A–5—Service provider/joint marketing exception

A bank may use one of these clauses, as applicable, to meet the requirements of § 40.6(a)(5) related to the exception for service providers and joint marketers in § 40.13. If a bank discloses nonpublic personal information under this exception, the bank must describe the categories of nonpublic personal information the bank discloses and the categories of third parties with whom the bank has contracted.

Sample Clause A–5, Alternative 1:

We may disclose the following information to companies that perform marketing services on our behalf or to other financial institutions with whom we have joint marketing agreements:

- Information we receive from you on applications or other forms, such as [*provide illustrative examples, such as ''your name, address, social security number, assets, and income''*];
- Information about your transactions with us, our affiliates, or others, such as [*provide illustrative examples, such as ''your account balance, payment history, parties to transactions, and credit card usage''*]; and
- Information we receive from a consumer reporting agency, such as [*provide illustrative examples, such as ''your creditworthiness and credit history''*].

Sample Clause A–5, Alternative 2:

We may disclose all of the information we collect, as described [*describe location in the notice, such as ''above'' or ''below''*] to companies that perform marketing services on our behalf or to other financial institutions with whom we have joint marketing agreements.

A–6—Explanation of opt out right (institutions that disclose outside of the exceptions)

A bank may use this clause, as applicable, to meet the requirement of § 40.6(a)(6) to provide an explanation of the consumer's right to opt out of the disclosure of nonpublic personal information to nonaffiliated third parties, including the method(s) by which the consumer may exercise that right. The bank may use this clause if the bank discloses nonpublic personal information other than as permitted by the exceptions in §§ 40.13, 40.14, and 40.15.

Sample Clause A–6:

If you prefer that we not disclose nonpublic personal information about you to nonaffiliated third parties, you may opt out of those disclosures, that is, you may direct us not to make those disclosures (other than disclosures permitted by law). If you wish to opt out of disclosures to nonaffiliated third parties, you may [*describe a reasonable means of opting out, such as ''call the following toll-free number: (insert number)*].

A–7—Confidentiality and security (all institutions)

A bank may use this clause, as applicable, to meet the requirement of § 40.6(a)(8) to describe its policies and practices with respect to protecting the confidentiality and security of nonpublic personal information.

Sample Clause A–7:

We restrict access to nonpublic personal information about you to [*provide an appropriate description, such as ''those employees who need to know that information to provide products or services to you''*]. We maintain physical, electronic, and procedural safeguards that comply with federal standards to guard your nonpublic personal information.

Dated: May 9, 2000.

John D. Hawke, Jr.,

Comptroller of the Currency.

Board of Governors of the Federal Reserve System

12 CFR Chapter II

Authority and Issuance

For the reasons set out in the joint preamble, Title 12, Chapter II, of the Code of Federal Regulations is amended by adding a new part 216 to read as follows:

PART 216—PRIVACY OF CONSUMER FINANCIAL INFORMATION (REGULATION P)

Sec.
216.1 Purpose and scope.
216.2 Rule of construction.
216.3 Definitions.

Subpart A—Privacy and Opt Out Notices

216.4 Initial privacy notice to consumers required.
216.5 Annual privacy notice to customers required.
216.6 Information to be included in privacy notices.
216.7 Form of opt out notice to consumers; opt out methods.
216.8 Revised privacy notices.
216.9 Delivering privacy and opt out notices.

Subpart B—Limits on Disclosures

216.10 Limitation on disclosure of nonpublic personal information to nonaffiliated third parties.
216.11 Limits on redisclosure and reuse of information.
216.12 Limits on sharing account number information for marketing purposes.

Subpart C—Exceptions

216.13 Exception to opt out requirements for service providers and joint marketing.
216.14 Exceptions to notice and opt out requirements for processing and servicing transactions.
216.15 Other exceptions to notice and opt out requirements.

Subpart D—Relation to Other Laws; Effective Date

216.16 Protection of Fair Credit Reporting Act.
216.17 Relation to State laws.
216.18 Effective date; transition rule.

Appendix A to Part 216—Sample Clauses

Authority: 15 U.S.C. 6801 *et seq.*

§ 216.1 Purpose and scope.

(a) *Purpose.* This part governs the treatment of nonpublic personal information about consumers by the financial institutions listed in paragraph (b) of this section. This part:

(1) Requires a financial institution to provide notice to customers about its privacy policies and practices;

(2) Describes the conditions under which a financial institution may disclose nonpublic personal information about consumers to nonaffiliated third parties; and

(3) Provides a method for consumers to prevent a financial institution from disclosing that information to most nonaffiliated third parties by ''opting out'' of that disclosure, subject to the exceptions in §§ 216.13, 216.14, and 216.15.

(b) *Scope.* (1) This part applies only to nonpublic personal information about individuals who obtain financial products or services primarily for personal, family, or household purposes from the institutions listed below. This part does not apply to information about companies or about individuals who obtain financial products or services for business, commercial, or agricultural purposes. This part applies to the U. S. offices of entities for which the Board has primary supervisory authority. They are referred to in this part as ''you.'' These are: State member banks, bank holding companies and certain of their nonbank subsidiaries or affiliates, State uninsured branches and agencies of foreign banks, commercial lending companies owned or controlled by foreign banks, and Edge and Agreement corporations.

(2) Nothing in this part modifies, limits, or supersedes the standards governing individually identifiable health information promulgated by the Secretary of Health and Human Services under the authority of sections 262 and 264 of the Health Insurance Portability and Accountability Act of 1996 (42 U.S.C. 1320d–1320d-8).

§ 216.2 Rule of construction.

The examples in this part and the sample clauses in appendix A of this part are not exclusive. Compliance with an example or use of a sample clause, to the extent applicable, constitutes compliance with this part.

§ 216.3 Definitions.

As used in this part, unless the context requires otherwise:

(a) *Affiliate* means any company that controls, is controlled by, or is under common control with another company.

(b) (1) *Clear and conspicuous* means that a notice is reasonably understandable and designed to call attention to the nature and significance of the information in the notice.

(2) *Examples*—(i) *Reasonably understandable.* You make your notice reasonably understandable if you:

(A) Present the information in the notice in clear, concise sentences, paragraphs, and sections;

(B) Use short explanatory sentences or bullet lists whenever possible;

(C) Use definite, concrete, everyday words and active voice whenever possible;

(D) Avoid multiple negatives;

(E) Avoid legal and highly technical business terminology whenever possible; and

(F) Avoid explanations that are imprecise and readily subject to different interpretations.

(ii) *Designed to call attention.* You design your notice to call attention to the nature and significance of the information in it if you:

(A) Use a plain-language heading to call attention to the notice;

(B) Use a typeface and type size that are easy to read;

(C) Provide wide margins and ample line spacing;

(D) Use boldface or italics for key words; and

(E) In a form that combines your notice with other information, use distinctive type size, style, and graphic devices, such as shading or sidebars, when you combine your notice with other information.

(iii) *Notices on web sites.* If you provide a notice on a web page, you design your notice to call attention to the nature and significance of the information in it if you use text or visual cues to encourage scrolling down the page if necessary to view the entire notice and ensure that other elements on the web site (such as text, graphics, hyperlinks, or sound) do not distract attention from the notice, and you either:

(A) Place the notice on a screen that consumers frequently access, such as a page on which transactions are conducted; or

(B) Place a link on a screen that consumers frequently access, such as a page on which transactions are conducted, that connects directly to the notice and is labeled appropriately to convey the importance, nature, and relevance of the notice.

(c) *Collect* means to obtain information that you organize or can retrieve by the name of an individual or by identifying number, symbol, or other identifying particular assigned to the individual, irrespective of the source of the underlying information.

(d) *Company* means any corporation, limited liability company, business trust, general or limited partnership, association, or similar organization.

(e)(1) *Consumer* means an individual who obtains or has obtained a financial product or service from you that is to be used primarily for personal, family, or household purposes, or that individual's legal representative.

(2) *Examples*—(i) An individual who applies to you for credit for personal, family, or household purposes is a consumer of a financial service, regardless of whether the credit is extended.

(ii) An individual who provides nonpublic personal information to you in order to obtain a determination about whether he or she may qualify for a loan to be used primarily for personal, family, or household purposes is a consumer of a financial service, regardless of whether the loan is extended.

(iii) An individual who provides nonpublic personal information to you in connection with obtaining or seeking to obtain financial, investment, or economic advisory services is a consumer regardless of whether you establish a continuing advisory relationship.

(iv) If you hold ownership or servicing rights to an individual's loan that is used primarily for personal, family, or household purposes, the individual is your consumer, even if you hold those rights in conjunction with one or more other institutions. (The individual is also a consumer with respect to the other financial institutions involved.) An individual who has a loan in which you have ownership or servicing rights is your consumer, even if you, or another institution with those rights, hire an agent to collect on the loan.

(v) An individual who is a consumer of another financial institution is not your consumer solely because you act as agent for, or provide processing or other services to, that financial institution.

(vi) An individual is not your consumer solely because he or she has designated you as trustee for a trust.

(vii) An individual is not your consumer solely because he or she is a beneficiary of a trust for which you are a trustee.

(viii) An individual is not your consumer solely because he or she is a participant or a beneficiary of an employee benefit plan that you sponsor or for which you act as a trustee or fiduciary.

(f) *Consumer reporting agency* has the same meaning as in section 603(f) of the Fair Credit Reporting Act (15 U.S.C. 1681a(f)).

(g) *Control* of a company means:

(1) Ownership, control, or power to vote 25 percent or more of the outstanding shares of any class of voting security of the company, directly or indirectly, or acting through one or more other persons;

(2) Control in any manner over the election of a majority of the directors, trustees, or general partners (or individuals exercising similar functions) of the company; or

(3) The power to exercise, directly or indirectly, a controlling influence over the management or policies of the company, as the Board determines.

(h) *Customer* means a consumer who has a customer relationship with you.

(i)(1) *Customer relationship* means a continuing relationship between a

consumer and you under which you provide one or more financial products or services to the consumer that are to be used primarily for personal, family, or household purposes.

(2) *Examples*—(i) *Continuing relationship.* A consumer has a continuing relationship with you if the consumer:

(A) Has a deposit or investment account with you;

(B) Obtains a loan from you;

(C) Has a loan for which you own the servicing rights;

(D) Purchases an insurance product from you;

(E) Holds an investment product through you, such as when you act as a custodian for securities or for assets in an Individual Retirement Arrangement;

(F) Enters into an agreement or understanding with you whereby you undertake to arrange or broker a home mortgage loan for the consumer;

(G) Enters into a lease of personal property with you; or

(H) Obtains financial, investment, or economic advisory services from you for a fee.

(ii) *No continuing relationship.* A consumer does not, however, have a continuing relationship with you if:

(A) The consumer obtains a financial product or service only in isolated transactions, such as using your ATM to withdraw cash from an account at another financial institution or purchasing a cashier's check or money order;

(B) You sell the consumer's loan and do not retain the rights to service that loan; or

(C) You sell the consumer airline tickets, travel insurance, or traveler's checks in isolated transactions.

(j) *Federal functional regulator* means:

(1) The Board of Governors of the Federal Reserve System;

(2) The Office of the Comptroller of the Currency;

(3) The Board of Directors of the Federal Deposit Insurance Corporation;

(4) The Director of the Office of Thrift Supervision;

(5) The National Credit Union Administration Board; and

(6) The Securities and Exchange Commission.

(k)(1) *Financial institution* means any institution the business of which is engaging in activities that are financial in nature or incidental to such financial activities as described in section 4(k) of the Bank Holding Company Act of 1956 (12 U.S.C. 1843(k)).

(2) *Financial institution* does not include:

(i) Any person or entity with respect to any financial activity that is subject to the jurisdiction of the Commodity Futures Trading Commission under the Commodity Exchange Act (7 U.S.C. 1 *et seq.*);

(ii) The Federal Agricultural Mortgage Corporation or any entity chartered and operating under the Farm Credit Act of 1971 (12 U.S.C. 2001 *et seq.*); or

(iii) Institutions chartered by Congress specifically to engage in securitizations, secondary market sales (including sales of servicing rights), or similar transactions related to a transaction of a consumer, as long as such institutions do not sell or transfer nonpublic personal information to a nonaffiliated third party.

(l)(1) *Financial product or service* means any product or service that a financial holding company could offer by engaging in an activity that is financial in nature or incidental to such a financial activity under section 4(k) of the Bank Holding Company Act of 1956 (12 U.S.C. 1843(k)).

(2) *Financial service* includes your evaluation or brokerage of information that you collect in connection with a request or an application from a consumer for a financial product or service.

(m)(1) *Nonaffiliated third party* means any person except:

(i) Your affiliate; or

(ii) A person employed jointly by you and any company that is not your affiliate (but *nonaffiliated third party* includes the other company that jointly employs the person).

(2) *Nonaffiliated third party* includes any company that is an affiliate solely by virtue of your or your affiliate's direct or indirect ownership or control of the company in conducting merchant banking or investment banking activities of the type described in section 4(k)(4)(H) or insurance company investment activities of the type described in section 4(k)(4)(I) of the Bank Holding Company Act of 1956 (12 U.S.C. 1843(k)(4)(H) and (I)).

(n)(1) *Nonpublic personal information* means:

(i) Personally identifiable financial information; and

(ii) Any list, description, or other grouping of consumers (and publicly available information pertaining to them) that is derived using any personally identifiable financial information that is not publicly available.

(2) *Nonpublic personal information* does not include:

(i) Publicly available information, except as included on a list described in paragraph (n)(1)(ii) of this section; or

(ii) Any list, description, or other grouping of consumers (and publicly available information pertaining to them) that is derived without using any personally identifiable financial information that is not publicly available.

(3) *Examples of lists*—(i) Nonpublic personal information includes any list of individuals' names and street addresses that is derived in whole or in part using personally identifiable financial information that is not publicly available, such as account numbers.

(ii) Nonpublic personal information does not include any list of individuals' names and addresses that contains only publicly available information, is not derived in whole or in part using personally identifiable financial information that is not publicly available, and is not disclosed in a manner that indicates that any of the individuals on the list is a consumer of a financial institution.

(o)(1) *Personally identifiable financial information* means any information:

(i) A consumer provides to you to obtain a financial product or service from you;

(ii) About a consumer resulting from any transaction involving a financial product or service between you and a consumer; or

(iii) You otherwise obtain about a consumer in connection with providing a financial product or service to that consumer.

(2) *Examples*—(i) *Information included.* Personally identifiable financial information includes:

(A) Information a consumer provides to you on an application to obtain a loan, credit card, or other financial product or service;

(B) Account balance information, payment history, overdraft history, and credit or debit card purchase information;

(C) The fact that an individual is or has been one of your customers or has obtained a financial product or service from you;

(D) Any information about your consumer if it is disclosed in a manner that indicates that the individual is or has been your consumer;

(E) Any information that a consumer provides to you or that you or your agent otherwise obtain in connection with collecting on a loan or servicing a loan;

(F) Any information you collect through an Internet ''cookie'' (an information collecting device from a web server); and

(G) Information from a consumer report.

(ii) *Information not included.* Personally identifiable financial information does not include:

(A) A list of names and addresses of customers of an entity that is not a financial institution; and

(B) Information that does not identify a consumer, such as aggregate information or blind data that does not contain personal identifiers such as account numbers, names, or addresses.

(p)(1) *Publicly available information* means any information that you have a reasonable basis to believe is lawfully made available to the general public from:

(i) Federal, State, or local government records;

(ii) Widely distributed media; or

(iii) Disclosures to the general public that are required to be made by Federal, State, or local law.

(2) *Reasonable basis.* You have a reasonable basis to believe that information is lawfully made available to the general public if you have taken steps to determine:

(i) That the information is of the type that is available to the general public; and

(ii) Whether an individual can direct that the information not be made available to the general public and, if so, that your consumer has not done so.

(3) *Examples*—(i) *Government records.* Publicly available information in government records includes information in government real estate records and security interest filings.

(ii) *Widely distributed media.* Publicly available information from widely distributed media includes information from a telephone book, a television or radio program, a newspaper, or a web site that is available to the general public on an unrestricted basis. A web site is not restricted merely because an Internet service provider or a site operator requires a fee or a password, so long as access is available to the general public.

(iii) *Reasonable basis*—(A) You have a reasonable basis to believe that mortgage information is lawfully made available to the general public if you have determined that the information is of the type included on the public record in the jurisdiction where the mortgage would be recorded.

(B) You have a reasonable basis to believe that an individual's telephone number is lawfully made available to the general public if you have located the telephone number in the telephone book or the consumer has informed you that the telephone number is not unlisted.

(q) *You* means:

(1) A State member bank, as defined in 12 CFR 208.3(g);

(2) A bank holding company, as defined in 12 CFR 225.2(c);

(3) A subsidiary (as defined in 12 CFR 225.2(o)) or affiliate of a bank holding company and a subsidiary of a State member bank, except for:

(i) A national bank or a State bank that is not a member of the Federal Reserve System;

(ii) A broker or dealer that is registered under the Securities Exchange Act of 1934 (15 U.S.C. 78a *et seq.*);

(iii) A registered investment adviser, properly registered by or on behalf of either the Securities Exchange Commission or any State, with respect to its investment advisory activities and its activities incidental to those investment advisory activities;

(iv) An investment company that is registered under the Investment Company Act of 1940 (15 U.S.C. 80a–1 *et seq.*); or

(v) An insurance company, with respect to its insurance activities and its activities incidental to those insurance activities, that is subject to supervision by a State insurance regulator;

(4) A State agency or State branch of a foreign bank, as those terms are defined in 12 U.S.C. 3101(b) (11) and (12), the deposits of which agency or branch are not insured by the Federal Deposit Insurance Corporation;

(5) A commercial lending company, as defined in 12 CFR 211.21(f), that is owned or controlled by a foreign bank, as defined in 12 CFR 211.21(m); or

(6) A corporation organized under section 25A of the Federal Reserve Act (12 U.S.C. 611–631) or a corporation having an agreement or undertaking with the Board under section 25 of the Federal Reserve Act (12 U.S.C. 601–604a).

Subpart A—Privacy and Opt Out Notices

§ 216.4 Initial privacy notice to consumers required.

(a) *Initial notice requirement.* You must provide a clear and conspicuous notice that accurately reflects your privacy policies and practices to:

(1) *Customer.* An individual who becomes your customer, not later than when you establish a customer relationship, except as provided in paragraph (e) of this section; and

(2) *Consumer.* A consumer, before you disclose any nonpublic personal information about the consumer to any nonaffiliated third party, if you make such a disclosure other than as authorized by §§ 216.14 and 216.15.

(b) *When initial notice to a consumer is not required.* You are not required to provide an initial notice to a consumer under paragraph (a) of this section if:

(1) You do not disclose any nonpublic personal information about the consumer to any nonaffiliated third party, other than as authorized by §§ 216.14 and 216.15; and

(2) You do not have a customer relationship with the consumer.

(c) *When you establish a customer relationship*—(1) *General rule.* You establish a customer relationship when you and the consumer enter into a continuing relationship.

(2) *Special rule for loans.*—You establish a customer relationship with a consumer when you originate a loan to the consumer for personal, family, or household purposes. If you subsequently transfer the servicing rights to that loan to another financial institution, the customer relationship transfers with the servicing rights.

(3)(i) *Examples of establishing customer relationship.* You establish a customer relationship when the consumer:

(A) Opens a credit card account with you;

(B) Executes the contract to open a deposit account with you, obtains credit from you, or purchases insurance from you;

(C) Agrees to obtain financial, economic, or investment advisory services from you for a fee; or

(D) Becomes your client for the purpose of your providing credit counseling or tax preparation services.

(ii) *Examples of loan rule.* You establish a customer relationship with a consumer who obtains a loan for personal, family, or household purposes when you:

(A) Originate the loan to the consumer; or

(B) Purchase the servicing rights to the consumer's loan.

(d) *Existing customers.* When an existing customer obtains a new financial product or service from you that is to be used primarily for personal, family, or household purposes, you satisfy the initial notice requirements of paragraph (a) of this section as follows:

(1) You may provide a revised privacy notice, under § 216.8, that covers the customer's new financial product or service; or

(2) If the initial, revised, or annual notice that you most recently provided to that customer was accurate with respect to the new financial product or service, you do not need to provide a new privacy notice under paragraph (a) of this section.

(e) *Exceptions to allow subsequent delivery of notice.* (1) You may provide

the initial notice required by paragraph (a)(1) of this section within a reasonable time after you establish a customer relationship if:

(i) Establishing the customer relationship is not at the customer's election; or

(ii) Providing notice not later than when you establish a customer relationship would substantially delay the customer's transaction and the customer agrees to receive the notice at a later time.

(2) *Examples of exceptions*—(i) *Not at customer's election.* Establishing a customer relationship is not at the customer's election if you acquire a customer's deposit liability or the servicing rights to a customer's loan from another financial institution and the customer does not have a choice about your acquisition.

(ii) *Substantial delay of customer's transaction.* Providing notice not later than when you establish a customer relationship would substantially delay the customer's transaction when:

(A) You and the individual agree over the telephone to enter into a customer relationship involving prompt delivery of the financial product or service; or

(B) You establish a customer relationship with an individual under a program authorized by Title IV of the Higher Education Act of 1965 (20 U.S.C. 1070 *et seq.*) or similar student loan programs where loan proceeds are disbursed promptly without prior communication between you and the customer.

(iii) *No substantial delay of customer's transaction.* Providing notice not later than when you establish a customer relationship would not substantially delay the customer's transaction when the relationship is initiated in person at your office or through other means by which the customer may view the notice, such as on a web site.

(f) *Delivery.* When you are required to deliver an initial privacy notice by this section, you must deliver it according to § 216.9. If you use a short-form initial notice for non-customers according to § 216.6(d), you may deliver your privacy notice according to § 216.6(d)(3).

§ 216.5 Annual privacy notice to customers required.

(a)(1) *General rule.* You must provide a clear and conspicuous notice to customers that accurately reflects your privacy policies and practices not less than annually during the continuation of the customer relationship. *Annually* means at least once in any period of 12 consecutive months during which that relationship exists. You may define the 12-consecutive-month period, but you must apply it to the customer on a consistent basis.

(2) *Example.* You provide a notice annually if you define the 12-consecutive-month period as a calendar year and provide the annual notice to the customer once in each calendar year following the calendar year in which you provided the initial notice. For example, if a customer opens an account on any day of year 1, you must provide an annual notice to that customer by December 31 of year 2.

(b)(1) *Termination of customer relationship.* You are not required to provide an annual notice to a former customer.

(2) *Examples.* Your customer becomes a former customer when:

(i) In the case of a deposit account, the account is inactive under your policies;

(ii) In the case of a closed-end loan, the customer pays the loan in full, you charge off the loan, or you sell the loan without retaining servicing rights;

(iii) In the case of a credit card relationship or other open-end credit relationship, you no longer provide any statements or notices to the customer concerning that relationship or you sell the credit card receivables without retaining servicing rights; or

(iv) You have not communicated with the customer about the relationship for a period of 12 consecutive months, other than to provide annual privacy notices or promotional material.

(c) *Special rule for loans.* If you do not have a customer relationship with a consumer under the special rule for loans in § 216.4(c)(2), then you need not provide an annual notice to that consumer under this section.

(d) *Delivery.* When you are required to deliver an annual privacy notice by this section, you must deliver it according to § 216.9.

§ 216.6 Information to be included in privacy notices.

(a) *General rule.* The initial, annual, and revised privacy notices that you provide under §§ 216.4, 216.5, and 216.8 must include each of the following items of information, in addition to any other information you wish to provide, that applies to you and to the consumers to whom you send your privacy notice:

(1) The categories of nonpublic personal information that you collect;

(2) The categories of nonpublic personal information that you disclose;

(3) The categories of affiliates and nonaffiliated third parties to whom you disclose nonpublic personal information, other than those parties to whom you disclose information under §§ 216.14 and 216.15;

(4) The categories of nonpublic personal information about your former customers that you disclose and the categories of affiliates and nonaffiliated third parties to whom you disclose nonpublic personal information about your former customers, other than those parties to whom you disclose information under §§ 216.14 and 216.15;

(5) If you disclose nonpublic personal information to a nonaffiliated third party under § 216.13 (and no other exception in § 216.14 or 216.15 applies to that disclosure), a separate statement of the categories of information you disclose and the categories of third parties with whom you have contracted;

(6) An explanation of the consumer's right under § 216.10(a) to opt out of the disclosure of nonpublic personal information to nonaffiliated third parties, including the method(s) by which the consumer may exercise that right at that time;

(7) Any disclosures that you make under section 603(d)(2)(A)(iii) of the Fair Credit Reporting Act (15 U.S.C. 1681a(d)(2)(A)(iii)) (that is, notices regarding the ability to opt out of disclosures of information among affiliates);

(8) Your policies and practices with respect to protecting the confidentiality and security of nonpublic personal information; and

(9) Any disclosure that you make under paragraph (b) of this section.

(b) *Description of nonaffiliated third parties subject to exceptions.* If you disclose nonpublic personal information to third parties as authorized under §§ 216.14 and 216.15, you are not required to list those exceptions in the initial or annual privacy notices required by §§ 216.4 and 216.5. When describing the categories with respect to those parties, you are required to state only that you make disclosures to other nonaffiliated third parties as permitted by law.

(c) *Examples*—(1) *Categories of nonpublic personal information that you collect.* You satisfy the requirement to categorize the nonpublic personal information that you collect if you list the following categories, as applicable:

(i) Information from the consumer;

(ii) Information about the consumer's transactions with you or your affiliates;

(iii) Information about the consumer's transactions with nonaffiliated third parties; and

(iv) Information from a consumer reporting agency.

(2) *Categories of nonpublic personal information you disclose*—(i) You satisfy the requirement to categorize the nonpublic personal information that you disclose if you list the categories

described in paragraph (c)(1) of this section, as applicable, and a few examples to illustrate the types of information in each category.

(ii) If you reserve the right to disclose all of the nonpublic personal information about consumers that you collect, you may simply state that fact without describing the categories or examples of the nonpublic personal information you disclose.

(3) *Categories of affiliates and nonaffiliated third parties to whom you disclose.* You satisfy the requirement to categorize the affiliates and nonaffiliated third parties to whom you disclose nonpublic personal information if you list the following categories, as applicable, and a few examples to illustrate the types of third parties in each category.

(i) Financial service providers;

(ii) Non-financial companies; and

(iii) Others.

(4) *Disclosures under exception for service providers and joint marketers.* If you disclose nonpublic personal information under the exception in § 216.13 to a nonaffiliated third party to market products or services that you offer alone or jointly with another financial institution, you satisfy the disclosure requirement of paragraph (a)(5) of this section if you:

(i) List the categories of nonpublic personal information you disclose, using the same categories and examples you used to meet the requirements of paragraph (a)(2) of this section, as applicable; and

(ii) State whether the third party is:

(A) A service provider that performs marketing services on your behalf or on behalf of you and another financial institution; or

(B) A financial institution with whom you have a joint marketing agreement.

(5) *Simplified notices.* If you do not disclose, and do not wish to reserve the right to disclose, nonpublic personal information about customers or former customers to affiliates or nonaffiliated third parties except as authorized under §§ 216.14 and 216.15, you may simply state that fact, in addition to the information you must provide under paragraphs (a)(1), (a)(8), (a)(9), and (b) of this section.

(6) *Confidentiality and security.* You describe your policies and practices with respect to protecting the confidentiality and security of nonpublic personal information if you do both of the following:

(i) Describe in general terms who is authorized to have access to the information; and

(ii) State whether you have security practices and procedures in place to ensure the confidentiality of the information in accordance with your policy. You are not required to describe technical information about the safeguards you use.

(d) *Short-form initial notice with opt out notice for non-customers*—(1) You may satisfy the initial notice requirements in §§ 216.4(a)(2), 216.7(b), and 216.7(c) for a consumer who is not a customer by providing a short-form initial notice at the same time as you deliver an opt out notice as required in § 216.7.

(2) A short-form initial notice must:

(i) Be clear and conspicuous;

(ii) State that your privacy notice is available upon request; and

(iii) Explain a reasonable means by which the consumer may obtain that notice.

(3) You must deliver your short-form initial notice according to § 216.9. You are not required to deliver your privacy notice with your short-form initial notice. You instead may simply provide the consumer a reasonable means to obtain your privacy notice. If a consumer who receives your short-form notice requests your privacy notice, you must deliver your privacy notice according to § 216.9.

(4) *Examples of obtaining privacy notice.* You provide a reasonable means by which a consumer may obtain a copy of your privacy notice if you:

(i) Provide a toll-free telephone number that the consumer may call to request the notice; or

(ii) For a consumer who conducts business in person at your office, maintain copies of the notice on hand that you provide to the consumer immediately upon request.

(e) *Future disclosures.* Your notice may include:

(1) Categories of nonpublic personal information that you reserve the right to disclose in the future, but do not currently disclose; and

(2) Categories of affiliates or nonaffiliated third parties to whom you reserve the right in the future to disclose, but to whom you do not currently disclose, nonpublic personal information.

(f) *Sample clauses.* Sample clauses illustrating some of the notice content required by this section are included in appendix A of this part.

§ 216.7 Form of opt out notice to consumers; opt out methods.

(a)(1) *Form of opt out notice.* If you are required to provide an opt out notice under § 216.10(a), you must provide a clear and conspicuous notice to each of your consumers that accurately explains the right to opt out under that section. The notice must state:

(i) That you disclose or reserve the right to disclose nonpublic personal information about your consumer to a nonaffiliated third party;

(ii) That the consumer has the right to opt out of that disclosure; and

(iii) A reasonable means by which the consumer may exercise the opt out right.

(2) *Examples*—(i) *Adequate opt out notice.* You provide adequate notice that the consumer can opt out of the disclosure of nonpublic personal information to a nonaffiliated third party if you:

(A) Identify all of the categories of nonpublic personal information that you disclose or reserve the right to disclose, and all of the categories of nonaffiliated third parties to which you disclose the information, as described in § 216.6(a)(2) and (3), and state that the consumer can opt out of the disclosure of that information; and

(B) Identify the financial products or services that the consumer obtains from you, either singly or jointly, to which the opt out direction would apply.

(ii) *Reasonable opt out means.* You provide a reasonable means to exercise an opt out right if you:

(A) Designate check-off boxes in a prominent position on the relevant forms with the opt out notice;

(B) Include a reply form together with the opt out notice;

(C) Provide an electronic means to opt out, such as a form that can be sent via electronic mail or a process at your web site, if the consumer agrees to the electronic delivery of information; or

(D) Provide a toll-free telephone number that consumers may call to opt out.

(iii) *Unreasonable opt out means.* You *do not* provide a reasonable means of opting out if:

(A) The only means of opting out is for the consumer to write his or her own letter to exercise that opt out right; or

(B) The only means of opting out as described in any notice subsequent to the initial notice is to use a check-off box that you provided with the initial notice but did not include with the subsequent notice.

(iv) *Specific opt out means.* You may require each consumer to opt out through a specific means, as long as that means is reasonable for that consumer.

(b) *Same form as initial notice permitted.* You may provide the opt out notice together with or on the same written or electronic form as the initial notice you provide in accordance with § 216.4.

(c) *Initial notice required when opt out notice delivered subsequent to initial notice.* If you provide the opt out

notice later than required for the initial notice in accordance with § 216.4, you must also include a copy of the initial notice with the opt out notice in writing or, if the consumer agrees, electronically.

(d) *Joint relationships*—(1) If two or more consumers jointly obtain a financial product or service from you, you may provide a single opt out notice. Your opt out notice must explain how you will treat an opt out direction by a joint consumer (as explained in paragraph (d)(5) of this section).

(2) Any of the joint consumers may exercise the right to opt out. You may either:

(i) Treat an opt out direction by a joint consumer as applying to all of the associated joint consumers; or

(ii) Permit each joint consumer to opt out separately.

(3) If you permit each joint consumer to opt out separately, you must permit one of the joint consumers to opt out on behalf of all of the joint consumers.

(4) You may not require *all* joint consumers to opt out before you implement *any* opt out direction.

(5) *Example.* If John and Mary have a joint checking account with you and arrange for you to send statements to John's address, you may do any of the following, but you must explain in your opt out notice which opt out policy you will follow:

(i) Send a single opt out notice to John's address, but you must accept an opt out direction from either John or Mary.

(ii) Treat an opt out direction by either John or Mary as applying to the entire account. If you do so, and John opts out, you may not require Mary to opt out as well before implementing John's opt out direction.

(iii) Permit John and Mary to make different opt out directions. If you do so:

(A) You must permit John and Mary to opt out for each other;

(B) If both opt out, you must permit both to notify you in a single response (such as on a form or through a telephone call); and

(C) If John opts out and Mary does not, you may only disclose nonpublic personal information about Mary, but not about John and not about John and Mary jointly.

(e) *Time to comply with opt out.* You must comply with a consumer's opt out direction as soon as reasonably practicable after you receive it.

(f) *Continuing right to opt out.* A consumer may exercise the right to opt out at any time.

(g) *Duration of consumer's opt out direction*—(1) A consumer's direction to opt out under this section is effective until the consumer revokes it in writing or, if the consumer agrees, electronically.

(2) When a customer relationship terminates, the customer's opt out direction continues to apply to the nonpublic personal information that you collected during or related to that relationship. If the individual subsequently establishes a new customer relationship with you, the opt out direction that applied to the former relationship does not apply to the new relationship.

(h) *Delivery.* When you are required to deliver an opt out notice by this section, you must deliver it according to § 216.9.

§ 216.8 Revised privacy notices.

(a) *General rule.* Except as otherwise authorized in this part, you must not, directly or through any affiliate, disclose any nonpublic personal information about a consumer to a nonaffiliated third party other than as described in the initial notice that you provided to that consumer under § 216.4, unless:

(1) You have provided to the consumer a clear and conspicuous revised notice that accurately describes your policies and practices;

(2) You have provided to the consumer a new opt out notice;

(3) You have given the consumer a reasonable opportunity, before you disclose the information to the nonaffiliated third party, to opt out of the disclosure; and

(4) The consumer does not opt out.

(b) *Examples*—(1) Except as otherwise permitted by §§ 216.13, 216.14, and 216.15, you must provide a revised notice before you:

(i) Disclose a new category of nonpublic personal information to any nonaffiliated third party;

(ii) Disclose nonpublic personal information to a new category of nonaffiliated third party; or

(iii) Disclose nonpublic personal information about a former customer to a nonaffiliated third party, if that former customer has not had the opportunity to exercise an opt out right regarding that disclosure.

(2) A revised notice is not required if you disclose nonpublic personal information to a new nonaffiliated third party that you adequately described in your prior notice.

(c) *Delivery.* When you are required to deliver a revised privacy notice by this section, you must deliver it according to § 216.9.

§ 216.9 Delivering privacy and opt out notices.

(a) *How to provide notices.* You must provide any privacy notices and opt out notices, including short-form initial notices, that this part requires so that each consumer can reasonably be expected to receive actual notice in writing or, if the consumer agrees, electronically.

(b) (1) *Examples of reasonable expectation of actual notice.* You may reasonably expect that a consumer will receive actual notice if you:

(i) Hand-deliver a printed copy of the notice to the consumer;

(ii) Mail a printed copy of the notice to the last known address of the consumer;

(iii) For the consumer who conducts transactions electronically, post the notice on the electronic site and require the consumer to acknowledge receipt of the notice as a necessary step to obtaining a particular financial product or service; or

(iv) For an isolated transaction with the consumer, such as an ATM transaction, post the notice on the ATM screen and require the consumer to acknowledge receipt of the notice as a necessary step to obtaining the particular financial product or service.

(2) *Examples of unreasonable expectation of actual notice.* You may *not,* however, reasonably expect that a consumer will receive actual notice of your privacy policies and practices if you:

(i) Only post a sign in your branch or office or generally publish advertisements of your privacy policies and practices; or

(ii) Send the notice via electronic mail to a consumer who does not obtain a financial product or service from you electronically.

(c) *Annual notices only.* You may reasonably expect that a customer will receive actual notice of your annual privacy notice if:

(1) The customer uses your web site to access financial products and services electronically and agrees to receive notices at the web site, and you post your current privacy notice continuously in a clear and conspicuous manner on the web site; or

(2) The customer has requested that you refrain from sending any information regarding the customer relationship, and your current privacy notice remains available to the customer upon request.

(d) *Oral description of notice insufficient.* You may not provide any notice required by this part solely by orally explaining the notice, either in person or over the telephone.

(e) *Retention or accessibility of notices for customers*–(1) For customers only, you must provide the initial notice required by § 216.4(a)(1), the annual

notice required by § 216.5(a), and the revised notice required by § 216.8 so that the customer can retain them or obtain them later in writing or, if the customer agrees, electronically.

(2) *Examples of retention or accessibility.* You provide a privacy notice to the customer so that the customer can retain it or obtain it later if you:

(i) Hand-deliver a printed copy of the notice to the customer;

(ii) Mail a printed copy of the notice to the last known address of the customer; or

(iii) Make your current privacy notice available on a web site (or a link to another web site) for the customer who obtains a financial product or service electronically and agrees to receive the notice at the web site.

(f) *Joint notice with other financial institutions.* You may provide a joint notice from you and one or more of your affiliates or other financial institutions, as identified in the notice, as long as the notice is accurate with respect to you and the other institutions.

(g) *Joint relationships.* If two or more consumers jointly obtain a financial product or service from you, you may satisfy the initial, annual, and revised notice requirements of §§ 216.4(a), 216.5(a), and 216.8(a), respectively, by providing one notice to those consumers jointly.

Subpart B—Limits on Disclosures

§ 216.10 Limits on disclosure of nonpublic personal information to nonaffiliated third parties.

(a) (1) *Conditions for disclosure.* Except as otherwise authorized in this part, you may not, directly or through any affiliate, disclose any nonpublic personal information about a consumer to a nonaffiliated third party unless:

(i) You have provided to the consumer an initial notice as required under § 216.4;

(ii) You have provided to the consumer an opt out notice as required in § 216.7;

(iii) You have given the consumer a reasonable opportunity, before you disclose the information to the nonaffiliated third party, to opt out of the disclosure; and

(iv) The consumer does not opt out.

(2) *Opt out definition.* Opt out means a direction by the consumer that you not disclose nonpublic personal information about that consumer to a nonaffiliated third party, other than as permitted by §§ 216.13, 216.14, and 216.15.

(3) *Examples of reasonable opportunity to opt out.* You provide a consumer with a reasonable opportunity to opt out if:

(i) *By mail.* You mail the notices required in paragraph (a)(1) of this section to the consumer and allow the consumer to opt out by mailing a form, calling a toll-free telephone number, or any other reasonable means within 30 days from the date you mailed the notices.

(ii) *By electronic means.* A customer opens an on-line account with you and agrees to receive the notices required in paragraph (a)(1) of this section electronically, and you allow the customer to opt out by any reasonable means within 30 days after the date that the customer acknowledges receipt of the notices in conjunction with opening the account.

(iii) *Isolated transaction with consumer.* For an isolated transaction, such as the purchase of a cashier's check by a consumer, you provide the consumer with a reasonable opportunity to opt out if you provide the notices required in paragraph (a)(1) of this section at the time of the transaction and request that the consumer decide, as a necessary part of the transaction, whether to opt out before completing the transaction.

(b) *Application of opt out to all consumers and all nonpublic personal information*—(1) You must comply with this section, regardless of whether you and the consumer have established a customer relationship.

(2) Unless you comply with this section, you may not, directly or through any affiliate, disclose any nonpublic personal information about a consumer that you have collected, regardless of whether you collected it before or after receiving the direction to opt out from the consumer.

(c) *Partial opt out.* You may allow a consumer to select certain nonpublic personal information or certain nonaffiliated third parties with respect to which the consumer wishes to opt out.

§ 216.11 Limits on redisclosure and reuse of information.

(a)(1) *Information you receive under an exception.* If you receive nonpublic personal information from a nonaffiliated financial institution under an exception in § 216.14 or 216.15 of this part, your disclosure and use of that information is limited as follows:

(i) You may disclose the information to the affiliates of the financial institution from which you received the information;

(ii) You may disclose the information to your affiliates, but your affiliates may, in turn, disclose and use the information only to the extent that you may disclose and use the information; and

(iii) You may disclose and use the information pursuant to an exception in § 216.14 or 216.15 in the ordinary course of business to carry out the activity covered by the exception under which you received the information.

(2) *Example.* If you receive a customer list from a nonaffiliated financial institution in order to provide account processing services under the exception in § 216.14(a), you may disclose that information under any exception in § 216.14 or 216.15 in the ordinary course of business in order to provide those services. For example, you could disclose the information in response to a properly authorized subpoena or to your attorneys, accountants, and auditors. You could not disclose that information to a third party for marketing purposes or use that information for your own marketing purposes.

(b)(1) *Information you receive outside of an exception.* If you receive nonpublic personal information from a nonaffiliated financial institution other than under an exception in § 216.14 or 216.15 of this part, you may disclose the information only:

(i) To the affiliates of the financial institution from which you received the information;

(ii) To your affiliates, but your affiliates may, in turn, disclose the information only to the extent that you can disclose the information; and

(iii) To any other person, if the disclosure would be lawful if made directly to that person by the financial institution from which you received the information.

(2) *Example.* If you obtain a customer list from a nonaffiliated financial institution outside of the exceptions in § 216.14 and 216.15:

(i) You may use that list for your own purposes; and

(ii) You may disclose that list to another nonaffiliated third party only if the financial institution from which you purchased the list could have lawfully disclosed the list to that third party. That is, you may disclose the list in accordance with the privacy policy of the financial institution from which you received the list, as limited by the opt out direction of each consumer whose nonpublic personal information you intend to disclose, and you may disclose the list in accordance with an exception in § 216.14 or 216.15, such as to your attorneys or accountants.

(c) *Information you disclose under an exception.* If you disclose nonpublic personal information to a nonaffiliated third party under an exception in

§ 216.14 or 216.15 of this part, the third party may disclose and use that information only as follows:

(1) The third party may disclose the information to your affiliates;

(2) The third party may disclose the information to its affiliates, but its affiliates may, in turn, disclose and use the information only to the extent that the third party may disclose and use the information; and

(3) The third party may disclose and use the information pursuant to an exception in § 216.14 or 216.15 in the ordinary course of business to carry out the activity covered by the exception under which it received the information.

(d) *Information you disclose outside of an exception.* If you disclose nonpublic personal information to a nonaffiliated third party other than under an exception in § 216.14 or 216.15 of this part, the third party may disclose the information only:

(1) To your affiliates;

(2) To its affiliates, but its affiliates, in turn, may disclose the information only to the extent the third party can disclose the information; and

(3) To any other person, if the disclosure would be lawful if you made it directly to that person.

§ 216.12 Limits on sharing account number information for marketing purposes.

(a) *General prohibition on disclosure of account numbers.* You must not, directly or through an affiliate, disclose, other than to a consumer reporting agency, an account number or similar form of access number or access code for a consumer's credit card account, deposit account, or transaction account to any nonaffiliated third party for use in telemarketing, direct mail marketing, or other marketing through electronic mail to the consumer.

(b) *Exceptions.* Paragraph (a) of this section does not apply if you disclose an account number or similar form of access number or access code:

(1) To your agent or service provider solely in order to perform marketing for your own products or services, as long as the agent or service provider is not authorized to directly initiate charges to the account; or

(2) To a participant in a private label credit card program or an affinity or similar program where the participants in the program are identified to the customer when the customer enters into the program.

(c) *Examples*—(1) *Account number.* An account number, or similar form of access number or access code, does not include a number or code in an encrypted form, as long as you do not provide the recipient with a means to decode the number or code.

(2) *Transaction account.* A transaction account is an account other than a deposit account or a credit card account. A transaction account does not include an account to which third parties cannot initiate charges.

Subpart C—Exceptions

§ 216.13 Exception to opt out requirements for service providers and joint marketing.

(a) *General rule.* (1) The opt out requirements in §§ 216.7 and 216.10 do not apply when you provide nonpublic personal information to a nonaffiliated third party to perform services for you or functions on your behalf, if you:

(i) Provide the initial notice in accordance with § 216.4; and

(ii) Enter into a contractual agreement with the third party that prohibits the third party from disclosing or using the information other than to carry out the purposes for which you disclosed the information, including use under an exception in § 216.14 or 216.15 in the ordinary course of business to carry out those purposes.

(2) *Example.* If you disclose nonpublic personal information under this section to a financial institution with which you perform joint marketing, your contractual agreement with that institution meets the requirements of paragraph (a)(1)(ii) of this section if it prohibits the institution from disclosing or using the nonpublic personal information except as necessary to carry out the joint marketing or under an exception in § 216.14 or 216.15 in the ordinary course of business to carry out that joint marketing.

(b) *Service may include joint marketing.* The services a nonaffiliated third party performs for you under paragraph (a) of this section may include marketing of your own products or services or marketing of financial products or services offered pursuant to joint agreements between you and one or more financial institutions.

(c) *Definition of joint agreement.* For purposes of this section, joint agreement means a written contract pursuant to which you and one or more financial institutions jointly offer, endorse, or sponsor a financial product or service.

§ 216.14 Exceptions to notice and opt out requirements for processing and servicing transactions.

(a) *Exceptions for processing transactions at consumer's request.* The requirements for initial notice in § 216.4(a)(2), for the opt out in §§ 216.7 and 216.10, and for service providers and joint marketing in § 216.13 do not apply if you disclose nonpublic personal information as necessary to effect, administer, or enforce a transaction that a consumer requests or authorizes, or in connection with:

(1) Servicing or processing a financial product or service that a consumer requests or authorizes;

(2) Maintaining or servicing the consumer's account with you, or with another entity as part of a private label credit card program or other extension of credit on behalf of such entity; or

(3) A proposed or actual securitization, secondary market sale (including sales of servicing rights), or similar transaction related to a transaction of the consumer.

(b) *Necessary to effect, administer, or enforce a transaction* means that the disclosure is:

(1) Required, or is one of the lawful or appropriate methods, to enforce your rights or the rights of other persons engaged in carrying out the financial transaction or providing the product or service; or

(2) Required, or is a usual, appropriate or acceptable method:

(i) To carry out the transaction or the product or service business of which the transaction is a part, and record, service, or maintain the consumer's account in the ordinary course of providing the financial service or financial product;

(ii) To administer or service benefits or claims relating to the transaction or the product or service business of which it is a part;

(iii) To provide a confirmation, statement, or other record of the transaction, or information on the status or value of the financial service or financial product to the consumer or the consumer's agent or broker;

(iv) To accrue or recognize incentives or bonuses associated with the transaction that are provided by you or any other party;

(v) To underwrite insurance at the consumer's request or for reinsurance purposes, or for any of the following purposes as they relate to a consumer's insurance: account administration, reporting, investigating, or preventing fraud or material misrepresentation, processing premium payments, processing insurance claims, administering insurance benefits (including utilization review activities), participating in research projects, or as otherwise required or specifically permitted by Federal or State law; or

(vi) In connection with:

(A) The authorization, settlement, billing, processing, clearing, transferring, reconciling or collection of

amounts charged, debited, or otherwise paid using a debit, credit, or other payment card, check, or account number, or by other payment means;

(B) The transfer of receivables, accounts, or interests therein; or

(C) The audit of debit, credit, or other payment information.

§ 216.15 Other exceptions to notice and opt out requirements.

(a) *Exceptions to opt out requirements.* The requirements for initial notice in § 216.4(a)(2), for the opt out in §§ 216.7 and 216.10, and for service providers and joint marketing in § 216.13 do not apply when you disclose nonpublic personal information:

(1) With the consent or at the direction of the consumer, provided that the consumer has not revoked the consent or direction;

(2)(i) To protect the confidentiality or security of your records pertaining to the consumer, service, product, or transaction;

(ii) To protect against or prevent actual or potential fraud, unauthorized transactions, claims, or other liability;

(iii) For required institutional risk control or for resolving consumer disputes or inquiries;

(iv) To persons holding a legal or beneficial interest relating to the consumer; or

(v) To persons acting in a fiduciary or representative capacity on behalf of the consumer;

(3) To provide information to insurance rate advisory organizations, guaranty funds or agencies, agencies that are rating you, persons that are assessing your compliance with industry standards, and your attorneys, accountants, and auditors;

(4) To the extent specifically permitted or required under other provisions of law and in accordance with the Right to Financial Privacy Act of 1978 (12 U.S.C. 3401 *et seq.*), to law enforcement agencies (including a federal functional regulator, the Secretary of the Treasury, with respect to 31 U.S.C. Chapter 53, Subchapter II (Records and Reports on Monetary Instruments and Transactions) and 12 U.S.C. Chapter 21 (Financial Recordkeeping), a State insurance authority, with respect to any person domiciled in that insurance authority's State that is engaged in providing insurance, and the Federal Trade Commission), self-regulatory organizations, or for an investigation on a matter related to public safety;

(5)(i) To a consumer reporting agency in accordance with the Fair Credit Reporting Act (15 U.S.C. 1681 *et seq.*), or

(ii) From a consumer report reported by a consumer reporting agency;

(6) In connection with a proposed or actual sale, merger, transfer, or exchange of all or a portion of a business or operating unit if the disclosure of nonpublic personal information concerns solely consumers of such business or unit; or

(7)(i) To comply with Federal, State, or local laws, rules and other applicable legal requirements;

(ii) To comply with a properly authorized civil, criminal, or regulatory investigation, or subpoena or summons by Federal, State, or local authorities; or

(iii) To respond to judicial process or government regulatory authorities having jurisdiction over you for examination, compliance, or other purposes as authorized by law.

(b) *Examples of consent and revocation of consent.* (1) A consumer may specifically consent to your disclosure to a nonaffiliated insurance company of the fact that the consumer has applied to you for a mortgage so that the insurance company can offer homeowner's insurance to the consumer.

(2) A consumer may revoke consent by subsequently exercising the right to opt out of future disclosures of nonpublic personal information as permitted under § 216.7(f).

Subpart D—Relation to Other Laws; Effective Date

§ 216.16 Protection of Fair Credit Reporting Act.

Nothing in this part shall be construed to modify, limit, or supersede the operation of the Fair Credit Reporting Act (15 U.S.C. 1681 *et seq.*), and no inference shall be drawn on the basis of the provisions of this part regarding whether information is transaction or experience information under section 603 of that Act.

§ 216.17 Relation to State laws.

(a) *In general.* This part shall not be construed as superseding, altering, or affecting any statute, regulation, order, or interpretation in effect in any State, except to the extent that such State statute, regulation, order, or interpretation is inconsistent with the provisions of this part, and then only to the extent of the inconsistency.

(b) *Greater protection under State law.* For purposes of this section, a State statute, regulation, order, or interpretation is not inconsistent with the provisions of this part if the protection such statute, regulation, order, or interpretation affords any consumer is greater than the protection provided under this part, as determined by the Federal Trade Commission, after consultation with the Board, on the Federal Trade Commission's own motion, or upon the petition of any interested party.

§ 216.18 Effective date; transition rule.

(a) *Effective date.* This part is effective November 13, 2000. In order to provide sufficient time for you to establish policies and systems to comply with the requirements of this part, the Board has extended the time for compliance with this part until July 1, 2001.

(b)(1) *Notice requirement for consumers who are your customers on the compliance date.* By July 1, 2001, you must have provided an initial notice, as required by § 216.4, to consumers who are your customers on July 1, 2001.

(2) *Example.* You provide an initial notice to consumers who are your customers on July 1, 2001, if, by that date, you have established a system for providing an initial notice to all new customers and have mailed the initial notice to all your existing customers.

(c) *Two-year grandfathering of service agreements.* Until July 1, 2002, a contract that you have entered into with a nonaffiliated third party to perform services for you or functions on your behalf satisfies the provisions of § 216.13(a)(1)(ii) of this part, even if the contract does not include a requirement that the third party maintain the confidentiality of nonpublic personal information, as long as you entered into the contract on or before July 1, 2000.

Appendix A to Part 216—Sample Clauses

Financial institutions, including a group of financial holding company affiliates that use a common privacy notice, may use the following sample clauses, if the clause is accurate for each institution that uses the notice. (Note that disclosure of certain information, such as assets, income, and information from a consumer reporting agency, may give rise to obligations under the Fair Credit Reporting Act, such as a requirement to permit a consumer to opt out of disclosures to affiliates or designation as a consumer reporting agency if disclosures are made to nonaffiliated third parties.)

A–1—Categories of information you collect (all institutions)

You may use this clause, as applicable, to meet the requirement of § 216.6(a)(1) to describe the categories of nonpublic personal information you collect.

Sample Clause A–1:

We collect nonpublic personal information about you from the following sources:

- Information we receive from you on applications or other forms;
- Information about your transactions with us, our affiliates, or others; and

• Information we receive from a consumer reporting agency.

A–2—Categories of information you disclose (institutions that disclose outside of the exceptions)

You may use one of these clauses, as applicable, to meet the requirement of § 216.6(a)(2) to describe the categories of nonpublic personal information you disclose. You may use these clauses if you disclose nonpublic personal information other than as permitted by the exceptions in §§ 216.13, 216.14, and 216.15.

Sample Clause A–2, Alternative 1:

We may disclose the following kinds of nonpublic personal information about you:

• Information we receive from you on applications or other forms, such as [*provide illustrative examples, such as ''your name, address, social security number, assets, and income''*];

• Information about your transactions with us, our affiliates, or others, such as [*provide illustrative examples, such as ''your account balance, payment history, parties to transactions, and credit card usage''*]; and

• Information we receive from a consumer reporting agency, such as [*provide illustrative examples, such as ''your creditworthiness and credit history''*].

Sample Clause A–2, Alternative 2:

We may disclose all of the information that we collect, as described [*describe location in the notice, such as ''above'' or ''below''*].

A–3—Categories of information you disclose and parties to whom you disclose (institutions that do not disclose outside of the exceptions)

You may use this clause, as applicable, to meet the requirements of §§ 216.6(a)(2), (3), and (4) to describe the categories of nonpublic personal information about customers and former customers that you disclose and the categories of affiliates and nonaffiliated third parties to whom you disclose. You may use this clause if you do not disclose nonpublic personal information to any party, other than as permitted by the exceptions in §§ 216.14, and 216.15.

Sample Clause A–3:

We do not disclose any nonpublic personal information about our customers or former customers to anyone, except as permitted by law.

A–4—Categories of parties to whom you disclose (institutions that disclose outside of the exceptions)

You may use this clause, as applicable, to meet the requirement of § 216.6(a)(3) to describe the categories of affiliates and nonaffiliated third parties to whom you disclose nonpublic personal information. You may use this clause if you disclose nonpublic personal information other than as permitted by the exceptions in §§ 216.13, 216.14, and 216.15, as well as when permitted by the exceptions in §§ 216.14, and 216.15.

Sample Clause A–4:

We may disclose nonpublic personal information about you to the following types of third parties:

• Financial service providers, such as [*provide illustrative examples, such as ''mortgage bankers, securities broker-dealers, and insurance agents''*];

• Non-financial companies, such as [*provide illustrative examples, such as ''retailers, direct marketers, airlines, and publishers''*]; and

• Others, such as [*provide illustrative examples, such as ''non-profit organizations''*].

We may also disclose nonpublic personal information about you to nonaffiliated third parties as permitted by law.

A–5—Service provider/joint marketing exception

You may use one of these clauses, as applicable, to meet the requirements of § 216.6(a)(5) related to the exception for service providers and joint marketers in § 216.13. If you disclose nonpublic personal information under this exception, you must describe the categories of nonpublic personal information you disclose and the categories of third parties with whom you have contracted.

Sample Clause A–5, Alternative 1:

We may disclose the following information to companies that perform marketing services on our behalf or to other financial institutions with whom we have joint marketing agreements:

• Information we receive from you on applications or other forms, such as [*provide illustrative examples, such as ''your name, address, social security number, assets, and income''*];

• Information about your transactions with us, our affiliates, or others, such as [*provide illustrative examples, such as ''your account balance, payment history, parties to transactions, and credit card usage''*]; and

• Information we receive from a consumer reporting agency, such as [*provide illustrative examples, such as ''your creditworthiness and credit history''*].

Sample Clause A–5, Alternative 2:

We may disclose all of the information we collect, as described [*describe location in the notice, such as ''above'' or ''below''*] to companies that perform marketing services on our behalf or to other financial institutions with whom we have joint marketing agreements.

A–6—Explanation of opt out right (institutions that disclose outside of the exceptions)

You may use this clause, as applicable, to meet the requirement of § 216.6(a)(6) to provide an explanation of the consumer's right to opt out of the disclosure of nonpublic personal information to nonaffiliated third parties, including the method(s) by which the consumer may exercise that right. You may use this clause if you disclose nonpublic personal information other than as permitted by the exceptions in §§ 216.13, 216.14, and 216.15.

Sample Clause A–6:

If you prefer that we not disclose nonpublic personal information about you to nonaffiliated third parties, you may opt out of those disclosures, that is, you may direct us not to make those disclosures (other than disclosures permitted by law). If you wish to opt out of disclosures to nonaffiliated third parties, you may [*describe a reasonable means of opting out, such as ''call the following toll-free number: (insert number)''*].

A–7—Confidentiality and security (all institutions)

You may use this clause, as applicable, to meet the requirement of § 216.6(a)(8) to describe your policies and practices with respect to protecting the confidentiality and security of nonpublic personal information.

Sample Clause A–7:

We restrict access to nonpublic personal information about you to [*provide an appropriate description, such as ''those employees who need to know that information to provide products or services to you''*]. We maintain physical, electronic, and procedural safeguards that comply with federal standards to guard your nonpublic personal information.

By order of the Board of Governors of the Federal Reserve System, May 17, 2000.

Jennifer J. Johnson,

Secretary of the Board.

Federal Deposit Insurance Corporation

12 CFR Chapter III

Authority and Issuance

For the reasons set out in the joint preamble, the Federal Deposit Insurance Corporation amends Title 12, Chapter III of the Code of Federal Regulations by adding a new part 332 to read as follows.

PART 332—PRIVACY OF CONSUMER FINANCIAL INFORMATION

Sec.
332.1 Purpose and scope.
332.2 Rule of construction.
332.3 Definitions.

Subpart A—Privacy and Opt Out Notices

332.4 Initial privacy notice to consumers required.
332.5 Annual privacy notice to customers required.
332.6 Information to be included in privacy notices.
332.7 Form of opt out notice to consumers; opt out methods.
332.8 Revised privacy notices.
332.9 Delivering privacy and opt out notices.

Subpart B—Limits on Disclosures

332.10 Limitation on disclosure of nonpublic personal information to nonaffiliated third parties.
332.11 Limits on redisclosure and reuse of information.
332.12 Limits on sharing account number information for marketing purposes.

Subpart C—Exceptions

332.13 Exception to opt out requirements for service providers and joint marketing.
332.14 Exceptions to notice and opt out requirements for processing and servicing transactions.
332.15 Other exceptions to notice and opt out requirements.

Subpart D—Relation to Other Laws; Effective Date

332.16 Protection of Fair Credit Reporting Act.
332.17 Relation to State laws.
332.18 Effective date; transition rule.

Appendix A to Part 332—Sample Clauses

Authority: 12 U.S.C. 1819 (Seventh and Tenth); 15 U.S.C. 6801 *et seq.*

§ 332.1 Purpose and scope.

(a) *Purpose.* This part governs the treatment of nonpublic personal information about consumers by the financial institutions listed in paragraph (b) of this section. This part:

(1) Requires a financial institution to provide notice to customers about its privacy policies and practices;

(2) Describes the conditions under which a financial institution may disclose nonpublic personal information about consumers to nonaffiliated third parties; and

(3) Provides a method for consumers to prevent a financial institution from disclosing that information to most nonaffiliated third parties by ''opting out'' of that disclosure, subject to the exceptions in §§ 332.13, 332.14, and 332.15.

(b) *Scope.* (1) This part applies only to nonpublic personal information about individuals who obtain financial products or services primarily for personal, family, or household purposes from the institutions listed below. This part does not apply to information about companies or about individuals who obtain financial products or services for business, commercial, or agricultural purposes. This part applies to the United States offices of entities for which the Federal Deposit Insurance Corporation (FDIC) has primary federal supervisory authority. They are referred to in this part as ''you.'' These are: banks insured by the FDIC (other than members of the Federal Reserve System), insured state branches of foreign banks, and certain subsidiaries of such entities.

(2) Nothing in this part modifies, limits, or supersedes the standards governing individually identifiable health information promulgated by the Secretary of Health and Human Services under the authority of sections 262 and 264 of the Health Insurance Portability and Accountability Act of 1996 (42 U.S.C. 1320d–1320d–8).

§ 332.2 Rule of construction.

The examples in this part and the sample clauses in Appendix A of this part are not exclusive. Compliance with an example or use of a sample clause, to the extent applicable, constitutes compliance with this part.

§ 332.3 Definitions.

As used in this part, unless the context requires otherwise:

(a) *Affiliate* means any company that controls, is controlled by, or is under common control with another company.

(b)(1) *Clear and conspicuous* means that a notice is reasonably understandable and designed to call attention to the nature and significance of the information in the notice.

(2) *Examples*—(i) *Reasonably understandable.* You make your notice reasonably understandable if you:

(A) Present the information in the notice in clear, concise sentences, paragraphs, and sections;

(B) Use short explanatory sentences or bullet lists whenever possible;

(C) Use definite, concrete, everyday words and active voice whenever possible;

(D) Avoid multiple negatives;

(E) Avoid legal and highly technical business terminology whenever possible; and

(F) Avoid explanations that are imprecise and readily subject to different interpretations.

(ii) *Designed to call attention.* You design your notice to call attention to the nature and significance of the information in it if you:

(A) Use a plain-language heading to call attention to the notice;

(B) Use a typeface and type size that are easy to read;

(C) Provide wide margins and ample line spacing;

(D) Use boldface or italics for key words; and

(E) In a form that combines your notice with other information, use distinctive type size, style, and graphic devices, such as shading or sidebars, when you combine your notice with other information.

(iii) *Notices on web sites.* If you provide a notice on a web page, you design your notice to call attention to the nature and significance of the information in it if you use text or visual cues to encourage scrolling down the page if necessary to view the entire notice and ensure that other elements on the web site (such as text, graphics, hyperlinks, or sound) do not distract attention from the notice, and you either:

(A) Place the notice on a screen that consumers frequently access, such as a page on which transactions are conducted; or

(B) Place a link on a screen that consumers frequently access, such as a page on which transactions are conducted, that connects directly to the notice and is labeled appropriately to convey the importance, nature, and relevance of the notice.

(c) *Collect* means to obtain information that you organize or can retrieve by the name of an individual or by identifying number, symbol, or other identifying particular assigned to the individual, irrespective of the source of the underlying information.

(d) *Company* means any corporation, limited liability company, business trust, general or limited partnership, association, or similar organization.

(e)(1) *Consumer* means an individual who obtains or has obtained a financial product or service from you that is to be used primarily for personal, family, or household purposes, or that individual's legal representative.

(2) *Examples*—(i) An individual who applies to you for credit for personal, family, or household purposes is a consumer of a financial service, regardless of whether the credit is extended.

(ii) An individual who provides nonpublic personal information to you in order to obtain a determination about whether he or she may qualify for a loan to be used primarily for personal, family, or household purposes is a consumer of a financial service, regardless of whether the loan is extended.

(iii) An individual who provides nonpublic personal information to you in connection with obtaining or seeking to obtain financial, investment, or economic advisory services is a consumer regardless of whether you establish a continuing advisory relationship.

(iv) If you hold ownership or servicing rights to an individual's loan that is used primarily for personal, family, or household purposes, the individual is your consumer, even if you hold those rights in conjunction with one or more other institutions. (The individual is also a consumer with respect to the other financial institutions involved.) An individual who has a loan in which you have ownership or servicing rights is your consumer, even if you, or another institution with those rights, hire an agent to collect on the loan.

(v) An individual who is a consumer of another financial institution is not your consumer solely because you act as agent for, or provide processing or other services to, that financial institution.

(vi) An individual is not your consumer solely because he or she has designated you as trustee for a trust.

(vii) An individual is not your consumer solely because he or she is a beneficiary of a trust for which you are a trustee.

(viii) An individual is not your consumer solely because he or she is a

participant or a beneficiary of an employee benefit plan that you sponsor or for which you act as a trustee or fiduciary.

(f) *Consumer reporting agency* has the same meaning as in section 603(f) of the Fair Credit Reporting Act (15 U.S.C. 1681a(f)).

(g) *Control* of a company means:

(1) Ownership, control, or power to vote 25 percent or more of the outstanding shares of any class of voting security of the company, directly or indirectly, or acting through one or more other persons;

(2) Control in any manner over the election of a majority of the directors, trustees, or general partners (or individuals exercising similar functions) of the company; or

(3) The power to exercise, directly or indirectly, a controlling influence over the management or policies of the company, as the FDIC determines.

(h) *Customer* means a consumer who has a customer relationship with you.

(i)(1) *Customer relationship* means a continuing relationship between a consumer and you under which you provide one or more financial products or services to the consumer that are to be used primarily for personal, family, or household purposes.

(2) *Examples*—(i) *Continuing relationship.* A consumer has a continuing relationship with you if the consumer:

(A) Has a deposit or investment account with you;

(B) Obtains a loan from you;

(C) Has a loan for which you own the servicing rights;

(D) Purchases an insurance product from you;

(E) Holds an investment product through you, such as when you act as a custodian for securities or for assets in an Individual Retirement Arrangement;

(F) Enters into an agreement or understanding with you whereby you undertake to arrange or broker a home mortgage loan for the consumer;

(G) Enters into a lease of personal property with you; or

(H) Obtains financial, investment, or economic advisory services from you for a fee.

(ii) *No continuing relationship.* A consumer does not, however, have a continuing relationship with you if:

(A) The consumer obtains a financial product or service only in isolated transactions, such as using your ATM to withdraw cash from an account at another financial institution or purchasing a cashier's check or money order;

(B) You sell the consumer's loan and do not retain the rights to service that loan; or

(C) You sell the consumer airline tickets, travel insurance, or traveler's checks in isolated transactions.

(j) *Federal functional regulator* means:

(1) The Board of Governors of the Federal Reserve System;

(2) The Office of the Comptroller of the Currency;

(3) The Board of Directors of the Federal Deposit Insurance Corporation;

(4) The Director of the Office of Thrift Supervision;

(5) The National Credit Union Administration Board; and

(6) The Securities and Exchange Commission.

(k)(1) *Financial institution* means any institution the business of which is engaging in activities that are financial in nature or incidental to such financial activities as described in section 4(k) of the Bank Holding Company Act of 1956 (12 U.S.C. 1843(k)).

(2) *Financial institution* does not include:

(i) Any person or entity with respect to any financial activity that is subject to the jurisdiction of the Commodity Futures Trading Commission under the Commodity Exchange Act (7 U.S.C. 1 *et seq.*);

(ii) The Federal Agricultural Mortgage Corporation or any entity chartered and operating under the Farm Credit Act of 1971 (12 U.S.C. 2001 *et seq.*); or

(iii) Institutions chartered by Congress specifically to engage in securitizations, secondary market sales (including sales of servicing rights), or similar transactions related to a transaction of a consumer, as long as such institutions do not sell or transfer nonpublic personal information to a nonaffiliated third party.

(l)(1) *Financial product or service* means any product or service that a financial holding company could offer by engaging in an activity that is financial in nature or incidental to such a financial activity under section 4(k) of the Bank Holding Company Act of 1956 (12 U.S.C. 1843(k)).

(2) *Financial service* includes your evaluation or brokerage of information that you collect in connection with a request or an application from a consumer for a financial product or service.

(m)(1) *Nonaffiliated third party* means any person except:

(i) Your affiliate; or

(ii) A person employed jointly by you and any company that is not your affiliate (but *nonaffiliated third party* includes the other company that jointly employs the person).

(2) *Nonaffiliated third party* includes any company that is an affiliate solely by virtue of your or your affiliate's direct or indirect ownership or control of the company in conducting merchant banking or investment banking activities of the type described in section 4(k)(4)(H) or insurance company investment activities of the type described in section 4(k)(4)(I) of the Bank Holding Company Act of 1956 (12 U.S.C. 1843(k)(4)(H) and (I)).

(n)(1) *Nonpublic personal information* means:

(i) Personally identifiable financial information; and

(ii) Any list, description, or other grouping of consumers (and publicly available information pertaining to them) that is derived using any personally identifiable financial information that is not publicly available.

(2) *Nonpublic personal information* does not include:

(i) Publicly available information, except as included on a list described in paragraph (n)(1)(ii) of this section; or

(ii) Any list, description, or other grouping of consumers (and publicly available information pertaining to them) that is derived without using any personally identifiable financial information that is not publicly available.

(3) *Examples of lists*—(i) Nonpublic personal information includes any list of individuals' names and street addresses that is derived in whole or in part using personally identifiable financial information that is not publicly available, such as account numbers.

(ii) Nonpublic personal information does not include any list of individuals' names and addresses that contains only publicly available information, is not derived in whole or in part using personally identifiable financial information that is not publicly available, and is not disclosed in a manner that indicates that any of the individuals on the list is a consumer of a financial institution.

(o)(1) *Personally identifiable financial information* means any information:

(i) A consumer provides to you to obtain a financial product or service from you;

(ii) About a consumer resulting from any transaction involving a financial product or service between you and a consumer; or

(iii) You otherwise obtain about a consumer in connection with providing a financial product or service to that consumer.

(2) *Examples*—(i) *Information included.* Personally identifiable financial information includes:

(A) Information a consumer provides to you on an application to obtain a

loan, credit card, or other financial product or service;

(B) Account balance information, payment history, overdraft history, and credit or debit card purchase information;

(C) The fact that an individual is or has been one of your customers or has obtained a financial product or service from you;

(D) Any information about your consumer if it is disclosed in a manner that indicates that the individual is or has been your consumer;

(E) Any information that a consumer provides to you or that you or your agent otherwise obtain in connection with collecting on a loan or servicing a loan;

(F) Any information you collect through an Internet ''cookie'' (an information collecting device from a web server); and

(G) Information from a consumer report.

(ii) *Information not included.* Personally identifiable financial information does not include:

(A) A list of names and addresses of customers of an entity that is not a financial institution; and

(B) Information that does not identify a consumer, such as aggregate information or blind data that does not contain personal identifiers such as account numbers, names, or addresses.

(p)(1) *Publicly available information* means any information that you have a reasonable basis to believe is lawfully made available to the general public from:

(i) Federal, State, or local government records;

(ii) Widely distributed media; or

(iii) Disclosures to the general public that are required to be made by Federal, State, or local law.

(2) *Reasonable basis.* You have a reasonable basis to believe that information is lawfully made available to the general public if you have taken steps to determine:

(i) That the information is of the type that is available to the general public; and

(ii) Whether an individual can direct that the information not be made available to the general public and, if so, that your consumer has not done so.

(3) *Examples—(i) Government records.* Publicly available information in government records includes information in government real estate records and security interest filings.

(ii) *Widely distributed media.* Publicly available information from widely distributed media includes information from a telephone book, a television or radio program, a newspaper, or a web site that is available to the general public on an unrestricted basis. A web site is not restricted merely because an Internet service provider or a site operator requires a fee or a password, so long as access is available to the general public.

(iii) *Reasonable basis*— (A) You have a reasonable basis to believe that mortgage information is lawfully made available to the general public if you have determined that the information is of the type included on the public record in the jurisdiction where the mortgage would be recorded.

(B) You have a reasonable basis to believe that an individual's telephone number is lawfully made available to the general public if you have located the telephone number in the telephone book or the consumer has informed you that the telephone number is not unlisted.

(q) *You* means:

(1) A bank insured by the FDIC (other than a member of the Federal Reserve System);

(2) An insured state branch of a foreign bank; and

(3) A subsidiary of either such entity except:

(i) A broker or dealer that is registered under the Securities and Exchange Act of 1934 (15 U.S.C. 78a *et seq.*);

(ii) A registered investment adviser, properly registered by or on behalf of either the Securities Exchange Commission or any State, with respect to its investment advisory activities and its activities incidental to those investment advisory activities;

(iii) An investment company that is registered under the Investment Company Act of 1940 (15 U.S.C. 80a–1 *et seq.*); or

(iv) An insurance company, with respect to its insurance activities and its activities incidental to those insurance activities, that is subject to supervision by a State insurance regulator.

Subpart A—Privacy and Opt Out Notices

§ 332.4 Initial privacy notice to consumers required.

(a) *Initial notice requirement.* You must provide a clear and conspicuous notice that accurately reflects your privacy policies and practices to:

(1) *Customer.* An individual who becomes your customer, not later than when you establish a customer relationship, except as provided in paragraph (e) of this section; and

(2) *Consumer.* A consumer, before you disclose any nonpublic personal information about the consumer to any nonaffiliated third party, if you make such a disclosure other than as authorized by §§ 332.14 and 332.15.

(b) *When initial notice to a consumer is not required.* You are not required to provide an initial notice to a consumer under paragraph (a) of this section if:

(1) You do not disclose any nonpublic personal information about the consumer to any nonaffiliated third party, other than as authorized by §§ 332.14 and 332.15; and

(2) You do not have a customer relationship with the consumer.

(c) *When you establish a customer relationship*—(1) *General rule.* You establish a customer relationship when you and the consumer enter into a continuing relationship.

(2) *Special rule for loans.*—You establish a customer relationship with a consumer when you originate a loan to the consumer for personal, family, or household purposes. If you subsequently transfer the servicing rights to that loan to another financial institution, the customer relationship transfers with the servicing rights.

(3)(i) *Examples of establishing customer relationship.* You establish a customer relationship when the consumer:

(A) Opens a credit card account with you;

(B) Executes the contract to open a deposit account with you, obtains credit from you, or purchases insurance from you;

(C) Agrees to obtain financial, economic, or investment advisory services from you for a fee; or

(D) Becomes your client for the purpose of your providing credit counseling or tax preparation services.

(ii) *Examples of loan rule.* You establish a customer relationship with a consumer who obtains a loan for personal, family, or household purposes when you:

(A) Originate the loan to the consumer; or

(B) Purchase the servicing rights to the consumer's loan.

(d) *Existing customers.* When an existing customer obtains a new financial product or service from you that is to be used primarily for personal, family, or household purposes, you satisfy the initial notice requirements of paragraph (a) of this section as follows:

(1) You may provide a revised privacy notice, under § 332.8, that covers the customer's new financial product or service; or

(2) If the initial, revised, or annual notice that you most recently provided to that customer was accurate with respect to the new financial product or service, you do not need to provide a new privacy notice under paragraph (a) of this section.

(e) *Exceptions to allow subsequent delivery of notice.* (1) You may provide the initial notice required by paragraph (a)(1) of this section within a reasonable time after you establish a customer relationship if:

(i) Establishing the customer relationship is not at the customer's election; or

(ii) Providing notice not later than when you establish a customer relationship would substantially delay the customer's transaction and the customer agrees to receive the notice at a later time.

(2) *Examples of exceptions*—(i) *Not at customer's election.* Establishing a customer relationship is not at the customer's election if you acquire a customer's deposit liability or the servicing rights to a customer's loan from another financial institution and the customer does not have a choice about your acquisition.

(ii) *Substantial delay of customer's transaction.* Providing notice not later than when you establish a customer relationship would substantially delay the customer's transaction when:

(A) You and the individual agree over the telephone to enter into a customer relationship involving prompt delivery of the financial product or service; or

(B) You establish a customer relationship with an individual under a program authorized by Title IV of the Higher Education Act of 1965 (20 U.S.C. 1070 *et seq.*) or similar student loan programs where loan proceeds are disbursed promptly without prior communication between you and the customer.

(iii) *No substantial delay of customer's transaction.* Providing notice not later than when you establish a customer relationship would not substantially delay the customer's transaction when the relationship is initiated in person at your office or through other means by which the customer may view the notice, such as on a web site.

(f) *Delivery.* When you are required to deliver an initial privacy notice by this section, you must deliver it according to § 332.9. If you use a short-form initial notice for non-customers according to § 332.6(d), you may deliver your privacy notice according to § 332.6(d)(3).

§ 332.5 Annual privacy notice to customers required.

(a)(1) *General rule.* You must provide a clear and conspicuous notice to customers that accurately reflects your privacy policies and practices not less than annually during the continuation of the customer relationship. *Annually* means at least once in any period of 12 consecutive months during which that relationship exists. You may define the 12-consecutive-month period, but you must apply it to the customer on a consistent basis.

(2) *Example.* You provide a notice annually if you define the 12-consecutive-month period as a calendar year and provide the annual notice to the customer once in each calendar year following the calendar year in which you provided the initial notice. For example, if a customer opens an account on any day of year 1, you must provide an annual notice to that customer by December 31 of year 2.

(b)(1) *Termination of customer relationship.* You are not required to provide an annual notice to a former customer.

(2) *Examples.* Your customer becomes a former customer when:

(i) In the case of a deposit account, the account is inactive under your policies;

(ii) In the case of a closed-end loan, the customer pays the loan in full, you charge off the loan, or you sell the loan without retaining servicing rights;

(iii) In the case of a credit card relationship or other open-end credit relationship, you no longer provide any statements or notices to the customer concerning that relationship or you sell the credit card receivables without retaining servicing rights; or

(iv) You have not communicated with the customer about the relationship for a period of 12 consecutive months, other than to provide annual privacy notices or promotional material.

(c) *Special rule for loans.* If you do not have a customer relationship with a consumer under the special rule for loans in § 332.4(c)(2), then you need not provide an annual notice to that consumer under this section.

(d) *Delivery.* When you are required to deliver an annual privacy notice by this section, you must deliver it according to § 332.9.

§ 332.6 Information to be included in privacy notices.

(a) *General rule.* The initial, annual and revised privacy notices that you provide under §§ 332.4, 332.5, and 332.8 must include each of the following items of information, in addition to any other information you wish to provide, that applies to you and to the consumers to whom you send your privacy notice:

(1) The categories of nonpublic personal information that you collect;

(2) The categories of nonpublic personal information that you disclose;

(3) The categories of affiliates and nonaffiliated third parties to whom you disclose nonpublic personal information, other than those parties to whom you disclose information under §§ 332.14 and 332.15;

(4) The categories of nonpublic personal information about your former customers that you disclose and the categories of affiliates and nonaffiliated third parties to whom you disclose nonpublic personal information about your former customers, other than those parties to whom you disclose information under §§ 332.14 and 332.15;

(5) If you disclose nonpublic personal information to a nonaffiliated third party under § 332.13 (and no other exception in § 332.14 or 332.15 applies to that disclosure), a separate statement of the categories of information you disclose and the categories of third parties with whom you have contracted;

(6) An explanation of the consumer's right under § 332.10(a) to opt out of the disclosure of nonpublic personal information to nonaffiliated third parties, including the method(s) by which the consumer may exercise that right at that time;

(7) Any disclosures that you make under section 603(d)(2)(A)(iii) of the Fair Credit Reporting Act (15 U.S.C. 1681a(d)(2)(A)(iii)) (that is, notices regarding the ability to opt out of disclosures of information among affiliates);

(8) Your policies and practices with respect to protecting the confidentiality and security of nonpublic personal information; and

(9) Any disclosure that you make under paragraph (b) of this section.

(b) *Description of nonaffiliated third parties subject to exceptions.* If you disclose nonpublic personal information to third parties as authorized under §§ 332.14 and 332.15, you are not required to list those exceptions in the initial or annual privacy notices required by §§ 332.4 and 332.5. When describing the categories with respect to those parties, you are required to state only that you make disclosures to other nonaffiliated third parties as permitted by law.

(c) *Examples*—(1) *Categories of nonpublic personal information that you collect.* You satisfy the requirement to categorize the nonpublic personal information that you collect if you list the following categories, as applicable:

(i) Information from the consumer;

(ii) Information about the consumer's transactions with you or your affiliates;

(iii) Information about the consumer's transactions with nonaffiliated third parties; and

(iv) Information from a consumer reporting agency.

(2) *Categories of nonpublic personal information you disclose*—(i) You

satisfy the requirement to categorize the nonpublic personal information that you disclose if you list the categories described in paragraph (c)(1) of this section, as applicable, and a few examples to illustrate the types of information in each category.

(ii) If you reserve the right to disclose all of the nonpublic personal information about consumers that you collect, you may simply state that fact without describing the categories or examples of the nonpublic personal information you disclose.

(3) *Categories of affiliates and nonaffiliated third parties to whom you disclose.* You satisfy the requirement to categorize the affiliates and nonaffiliated third parties to whom you disclose nonpublic personal information if you list the following categories, as applicable, and a few examples to illustrate the types of third parties in each category.

(i) Financial service providers;

(ii) Non-financial companies; and

(iii) Others.

(4) *Disclosures under exception for service providers and joint marketers.* If you disclose nonpublic personal information under the exception in § 332.13 to a nonaffiliated third party to market products or services that you offer alone or jointly with another financial institution, you satisfy the disclosure requirement of paragraph (a)(5) of this section if you:

(i) List the categories of nonpublic personal information you disclose, using the same categories and examples you used to meet the requirements of paragraph (a)(2) of this section, as applicable; and

(ii) State whether the third party is:

(A) A service provider that performs marketing services on your behalf or on behalf of you and another financial institution; or

(B) A financial institution with whom you have a joint marketing agreement.

(5) *Simplified notices.* If you do not disclose, and do not wish to reserve the right to disclose, nonpublic personal information about customers or former customers to affiliates or nonaffiliated third parties except as authorized under §§ 332.14 and 332.15, you may simply state that fact, in addition to the information you must provide under paragraphs (a)(1), (a)(8), (a)(9), and (b) of this section.

(6) *Confidentiality and security.* You describe your policies and practices with respect to protecting the confidentiality and security of nonpublic personal information if you do both of the following:

(i) Describe in general terms who is authorized to have access to the information; and

(ii) State whether you have security practices and procedures in place to ensure the confidentiality of the information in accordance with your policy. You are not required to describe technical information about the safeguards you use.

(d) *Short-form initial notice with opt out notice for non-customers*—(1) You may satisfy the initial notice requirements in §§ 332.4(a)(2), 332.7(b), and 332.7(c) for a consumer who is not a customer by providing a short-form initial notice at the same time as you deliver an opt out notice as required in § 332.7.

(2) A short-form initial notice must:

(i) Be clear and conspicuous;

(ii) State that your privacy notice is available upon request; and

(iii) Explain a reasonable means by which the consumer may obtain that notice.

(3) You must deliver your short-form initial notice according to § 332.9. You are not required to deliver your privacy notice with your short-form initial notice. You instead may simply provide the consumer a reasonable means to obtain your privacy notice. If a consumer who receives your short-form notice requests your privacy notice, you must deliver your privacy notice according to § 332.9.

(4) *Examples of obtaining privacy notice.* You provide a reasonable means by which a consumer may obtain a copy of your privacy notice if you:

(i) Provide a toll-free telephone number that the consumer may call to request the notice; or

(ii) For a consumer who conducts business in person at your office, maintain copies of the notice on hand that you provide to the consumer immediately upon request.

(e) *Future disclosures.* Your notice may include:

(1) Categories of nonpublic personal information that you reserve the right to disclose in the future, but do not currently disclose; and

(2) Categories of affiliates or nonaffiliated third parties to whom you reserve the right in the future to disclose, but to whom you do not currently disclose, nonpublic personal information.

(f) *Sample clauses.* Sample clauses illustrating some of the notice content required by this section are included in appendix A of this part.

§ 332.7 Form of opt out notice to consumers; opt out methods.

(a) (1) *Form of opt out notice.* If you are required to provide an opt out notice under § 332.10(a), you must provide a clear and conspicuous notice to each of your consumers that accurately explains the right to opt out under that section. The notice must state:

(i) That you disclose or reserve the right to disclose nonpublic personal information about your consumer to a nonaffiliated third party;

(ii) That the consumer has the right to opt out of that disclosure; and

(iii) A reasonable means by which the consumer may exercise the opt out right.

(2) *Examples*—(i) *Adequate opt out notice.* You provide adequate notice that the consumer can opt out of the disclosure of nonpublic personal information to a nonaffiliated third party if you:

(A) Identify all of the categories of nonpublic personal information that you disclose or reserve the right to disclose, and all of the categories of nonaffiliated third parties to which you disclose the information, as described in § 332.6(a)(2) and (3), and state that the consumer can opt out of the disclosure of that information; and

(B) Identify the financial products or services that the consumer obtains from you, either singly or jointly, to which the opt out direction would apply.

(ii) *Reasonable opt out means.* You provide a reasonable means to exercise an opt out right if you:

(A) Designate check-off boxes in a prominent position on the relevant forms with the opt out notice;

(B) Include a reply form together with the opt out notice;

(C) Provide an electronic means to opt out, such as a form that can be sent via electronic mail or a process at your web site, if the consumer agrees to the electronic delivery of information; or

(D) Provide a toll-free telephone number that consumers may call to opt out.

(iii) *Unreasonable opt out means.* You *do not* provide a reasonable means of opting out if:

(A) The only means of opting out is for the consumer to write his or her own letter to exercise that opt out right; or

(B) The only means of opting out as described in any notice subsequent to the initial notice is to use a check-off box that you provide with the initial notice but did not include with the subsequent notice.

(iv) *Specific opt out means.* You may require each consumer to opt out through a specific means, as long as that means is reasonable for that consumer.

(b) *Same form as initial notice permitted.* You may provide the opt out notice together with or on the same written or electronic form as the initial

notice you provide in accordance with § 332.4.

(c) *Initial notice required when opt out notice delivered subsequent to initial notice.* If you provide the opt out notice later than required for the initial notice in accordance with § 332.4, you must also include a copy of the initial notice with the opt out notice in writing or, if the consumer agrees, electronically.

(d) *Joint relationships*—(1) If two or more consumers jointly obtain a financial product or service from you, you may provide a single opt out notice. Your opt out notice must explain how you will treat an opt out direction by a joint consumer (as explained in paragraph (d)(5) of this section).

(2) Any of the joint consumers may exercise the right to opt out. You may either:

(i) Treat an opt out direction by a joint consumer as applying to all of the associated joint consumers; or

(ii) Permit each joint consumer to opt out separately.

(3) If you permit each joint consumer to opt out separately, you must permit one of the joint consumers to opt out on behalf of all of the joint consumers.

(4) You may not require *all* joint consumers to opt out before you implement *any* opt out direction.

(5) *Example.* If John and Mary have a joint checking account with you and arrange for you to send statements to John's address, you may do any of the following, but you must explain in your opt out notice which opt out policy you will follow:

(i) Send a single opt out notice to John's address, but you must accept an opt out direction from either John or Mary.

(ii) Treat an opt out direction by either John or Mary as applying to the entire account. If you do so, and John opts out, you may not require Mary to opt out as well before implementing John's opt out direction.

(iii) Permit John and Mary to make different opt out directions. If you do so:

(A) You must permit John and Mary to opt out for each other;

(B) If both opt out, you must permit both to notify you in a single response (such as on a form or through a telephone call); and

(C) If John opts out and Mary does not, you may only disclose nonpublic personal information about Mary, but not about John and not about John and Mary jointly.

(e) *Time to comply with opt out.* You must comply with a consumer's opt out direction as soon as reasonably practicable after you receive it.

(f) *Continuing right to opt out.* A consumer may exercise the right to opt out at any time.

(g) *Duration of consumer's opt out direction*—(1) A consumer's direction to opt out under this section is effective until the consumer revokes it in writing or, if the consumer agrees, electronically.

(2) When a customer relationship terminates, the customer's opt out direction continues to apply to the nonpublic personal information that you collected during or related to that relationship. If the individual subsequently establishes a new customer relationship with you, the opt out direction that applied to the former relationship does not apply to the new relationship.

(h) *Delivery.* When you are required to deliver an opt out notice by this section, you must deliver it according to § 332.9.

§ 332.8 Revised privacy notices.

(a) *General rule.* Except as otherwise authorized in this part, you must not, directly or through any affiliate, disclose any nonpublic personal information about a consumer to a nonaffiliated third party other than as described in the initial notice that you provided to that consumer under § 332.4, unless:

(1) You have provided to the consumer a clear and conspicuous revised notice that accurately describes your policies and practices;

(2) You have provided to the consumer a new opt out notice;

(3) You have given the consumer a reasonable opportunity, before you disclose the information to the nonaffiliated third party, to opt out of the disclosure; and

(4) The consumer does not opt out.

(b) *Examples*—(1) Except as otherwise permitted by §§ 332.13, 332.14, and 332.15, you must provide a revised notice before you:

(i) Disclose a new category of nonpublic personal information to any nonaffiliated third party;

(ii) Disclose nonpublic personal information to a new category of nonaffiliated third party; or

(iii) Disclose nonpublic personal information about a former customer to a nonaffiliated third party, if that former customer has not had the opportunity to exercise an opt out right regarding that disclosure.

(2) A revised notice is not required if you disclose nonpublic personal information to a new nonaffiliated third party that you adequately described in your prior notice.

(c) *Delivery.* When you are required to deliver a revised privacy notice by this section, you must deliver it according to § 332.9.

§ 332.9 Delivering privacy and opt out notices.

(a) *How to provide notices.* You must provide any privacy notices and opt out notices, including short-form initial notices, that this part requires so that each consumer can reasonably be expected to receive actual notice in writing or, if the consumer agrees, electronically.

(b) (1) *Examples of reasonable expectation of actual notice.* You may reasonably expect that a consumer will receive actual notice if you:

(i) Hand-deliver a printed copy of the notice to the consumer;

(ii) Mail a printed copy of the notice to the last known address of the consumer;

(iii) For the consumer who conducts transactions electronically, post the notice on the electronic site and require the consumer to acknowledge receipt of the notice as a necessary step to obtaining a particular financial product or service; or

(iv) For an isolated transaction with the consumer, such as an ATM transaction, post the notice on the ATM screen and require the consumer to acknowledge receipt of the notice as a necessary step to obtaining the particular financial product or service.

(2) *Examples of unreasonable expectation of actual notice.* You may *not,* however, reasonably expect that a consumer will receive actual notice of your privacy policies and practices if you:

(i) Only post a sign in your branch or office or generally publish advertisements of your privacy policies and practices; or

(ii) Send the notice via electronic mail to a consumer who does not obtain a financial product or service from you electronically.

(c) *Annual notices only.* You may reasonably expect that a customer will receive actual notice of your annual privacy notice if:

(1) The customer uses your web site to access financial products and services electronically and agrees to receive notices at the web site, and you post your current privacy notice continuously in a clear and conspicuous manner on the web site; or

(2) The customer has requested that you refrain from sending any information regarding the customer relationship, and your current privacy notice remains available to the customer upon request.

(d) *Oral description of notice insufficient.* You may not provide any notice required by this part solely by orally explaining the notice, either in person or over the telephone.

(e) *Retention or accessibility of notices for customers*—(1) For customers only, you must provide the initial notice required by § 332.4(a)(1), the annual notice required by § 332.5(a), and the revised notice required by § 332.8 so that the customer can retain them or obtain them later in writing or, if the customer agrees, electronically.

(2) *Examples of retention or accessibility.* You provide a privacy notice to the customer so that the customer can retain it or obtain it later if you:

(i) Hand-deliver a printed copy of the notice to the customer;

(ii) Mail a printed copy of the notice to the last known address of the customer; or

(iii) Make your current privacy notice available on a web site (or a link to another web site) for the customer who obtains a financial product or service electronically and agrees to receive the notice at the web site.

(f) *Joint notice with other financial institutions.* You may provide a joint notice from you and one or more of your affiliates or other financial institutions, as identified in the notice, as long as the notice is accurate with respect to you and the other institutions.

(g) *Joint relationships.* If two or more consumers jointly obtain a financial product or service from you, you may satisfy the initial, annual, and revised notice requirements of §§ 332.4(a), 332.5(a), and 332.8(a), respectively, by providing one notice to those consumers jointly.

Subpart B—Limits on Disclosures

§ 332.10 Limits on disclosure of nonpublic personal information to nonaffiliated third parties.

(a) (1) *Conditions for disclosure.* Except as otherwise authorized in this part, you may not, directly or through any affiliate, disclose any nonpublic personal information about a consumer to a nonaffiliated third party unless:

(i) You have provided to the consumer an initial notice as required under § 332.4;

(ii) You have provided to the consumer an opt out notice as required in § 332.7;

(iii) You have given the consumer a reasonable opportunity, before you disclose the information to the nonaffiliated third party, to opt out of the disclosure; and

(iv) The consumer does not opt out.

(2) *Opt out definition.* Opt out means a direction by the consumer that you not disclose nonpublic personal information about that consumer to a nonaffiliated third party, other than as permitted by §§ 332.13, 332.14, and 332.15.

(3) *Examples of reasonable opportunity to opt out.* You provide a consumer with a reasonable opportunity to opt out if:

(i) *By mail.* You mail the notices required in paragraph (a)(1) of this section to the consumer and allow the consumer to opt out by mailing a form, calling a toll-free telephone number, or any other reasonable means within 30 days from the date you mailed the notices.

(ii) *By electronic means.* A customer opens an on-line account with you and agrees to receive the notices required in paragraph (a)(1) of this section electronically, and you allow the customer to opt out by any reasonable means within 30 days after the date that the customer acknowledges receipt of the notices in conjunction with opening the account.

(iii) *Isolated transaction with consumer.* For an isolated transaction, such as the purchase of a cashier's check by a consumer, you provide the consumer with a reasonable opportunity to opt out if you provide the notices required in paragraph (a)(1) of this section at the time of the transaction and request that the consumer decide, as a necessary part of the transaction, whether to opt out before completing the transaction.

(b) *Application of opt out to all consumers and all nonpublic personal information*—(1) You must comply with this section, regardless of whether you and the consumer have established a customer relationship.

(2) Unless you comply with this section, you may not, directly or through any affiliate, disclose any nonpublic personal information about a consumer that you have collected, regardless of whether you collected it before or after receiving the direction to opt out from the consumer.

(c) *Partial opt out.* You may allow a consumer to select certain nonpublic personal information or certain nonaffiliated third parties with respect to which the consumer wishes to opt out.

§ 332.11 Limits on redisclosure and reuse of information.

(a)(1) *Information you receive under an exception.* If you receive nonpublic personal information from a nonaffiliated financial institution under an exception in § 332.14 or 332.15 of this part, your disclosure and use of that information is limited as follows:

(i) You may disclose the information to the affiliates of the financial institution from which you received the information;

(ii) You may disclose the information to your affiliates, but your affiliates may, in turn, disclose and use the information only to the extent that you may disclose and use the information; and

(iii) You may disclose and use the information pursuant to an exception in § 332.14 or 332.15 in the ordinary course of business to carry out the activity covered by the exception under which you received the information.

(2) *Example.* If you receive a customer list from a nonaffiliated financial institution in order to provide account processing services under the exception in § 332.14(a), you may disclose that information under any exception in § 332.14 or 332.15 in the ordinary course of business in order to provide those services. For example, you could disclose the information in response to a properly authorized subpoena or to your attorneys, accountants, and auditors. You could not disclose that information to a third party for marketing purposes or use that information for your own marketing purposes.

(b)(1) *Information you receive outside of an exception.* If you receive nonpublic personal information from a nonaffiliated financial institution other than under an exception in § 332.14 or 332.15 of this part, you may disclose the information only:

(i) To the affiliates of the financial institution from which you received the information;

(ii) To your affiliates, but your affiliates may, in turn, disclose the information only to the extent that you can disclose the information; and

(iii) To any other person, if the disclosure would be lawful if made directly to that person by the financial institution from which you received the information.

(2) *Example.* If you obtain a customer list from a nonaffiliated financial institution outside of the exceptions in § 332.14 and 332.15:

(i) You may use that list for your own purposes; and

(ii) You may disclose that list to another nonaffiliated third party only if the financial institution from which you purchased the list could have lawfully disclosed the list to that third party. That is, you may disclose the list in accordance with the privacy policy of the financial institution from which you received the list, as limited by the opt out direction of each consumer whose nonpublic personal information you intend to disclose, and you may disclose the list in accordance with an exception in § 332.14 or 332.15, such as to your attorneys or accountants.

(c) *Information you disclose under an exception.* If you disclose nonpublic personal information to a nonaffiliated third party under an exception in § 332.14 or 332.15 of this part, the third party may disclose and use that information only as follows:

(1) The third party may disclose the information to your affiliates;

(2) The third party may disclose the information to its affiliates, but its affiliates may, in turn, disclose and use the information only to the extent that the third party may disclose and use the information; and

(3) The third party may disclose and use the information pursuant to an exception in § 332.14 or 332.15 in the ordinary course of business to carry out the activity covered by the exception under which it received the information.

(d) *Information you disclose outside of an exception.* If you disclose nonpublic personal information to a nonaffiliated third party other than under an exception in § 332.14 or 332.15 of this part, the third party may disclose the information only:

(1) To your affiliates;

(2) To its affiliates, but its affiliates, in turn, may disclose the information only to the extent the third party can disclose the information; and

(3) To any other person, if the disclosure would be lawful if you made it directly to that person.

§ 332.12 Limits on sharing account number information for marketing purposes.

(a) *General prohibition on disclosure of account numbers.* You must not, directly or through an affiliate, disclose, other than to a consumer reporting agency, an account number or similar form of access number or access code for a consumer's credit card account, deposit account, or transaction account to any nonaffiliated third party for use in telemarketing, direct mail marketing, or other marketing through electronic mail to the consumer.

(b) *Exceptions.* Paragraph (a) of this section does not apply if you disclose an account number or similar form of access number or access code:

(1) To your agent or service provider solely in order to perform marketing for your own products or services, as long as the agent or service provider is not authorized to directly initiate charges to the account; or

(2) To a participant in a private label credit card program or an affinity or similar program where the participants in the program are identified to the customer when the customer enters into the program.

(c) *Examples*—(1) *Account number.* An account number, or similar form of access number or access code, does not include a number or code in an encrypted form, as long as you do not provide the recipient with a means to decode the number or code.

(2) *Transaction account.* A transaction account is an account other than a deposit account or a credit card account. A transaction account does not include an account to which third parties cannot initiate charges.

Subpart C—Exceptions

§ 332.13 Exception to opt out requirements for service providers and joint marketing.

(a) *General rule.* (1) The opt out requirements in §§ 332.7 and 332.10 do not apply when you provide nonpublic personal information to a nonaffiliated third party to perform services for you or functions on your behalf, if you:

(i) Provide the initial notice in accordance with § 332.4; and

(ii) Enter into a contractual agreement with the third party that prohibits the third party from disclosing or using the information other than to carry out the purposes for which you disclosed the information, including use under an exception in § 332.14 or 332.15 in the ordinary course of business to carry out those purposes.

(2) *Example.* If you disclose nonpublic personal information under this section to a financial institution with which you perform joint marketing, your contractual agreement with that institution meets the requirements of paragraph (a)(1)(ii) of this section if it prohibits the institution from disclosing or using the nonpublic personal information except as necessary to carry out the joint marketing or under an exception in § 332.14 or 332.15 in the ordinary course of business to carry out that joint marketing.

(b) *Service may include joint marketing.* The services a nonaffiliated third party performs for you under paragraph (a) of this section may include marketing of your own products or services or marketing of financial products or services offered pursuant to joint agreements between you and one or more financial institutions.

(c) *Definition of joint agreement.* For purposes of this section, joint agreement means a written contract pursuant to which you and one or more financial institutions jointly offer, endorse, or sponsor a financial product or service.

§ 332.14 Exceptions to notice and opt out requirements for processing and servicing transactions.

(a) *Exceptions for processing transactions at consumer's request.* The requirements for initial notice in § 332.4(a)(2), for the opt out in §§ 332.7 and 332.10 and for service providers and joint marketing in § 332.13 do not apply if you disclose nonpublic personal information as necessary to effect, administer, or enforce a transaction that a consumer requests or authorizes, or in connection with:

(1) Servicing or processing a financial product or service that a consumer requests or authorizes;

(2) Maintaining or servicing the consumer's account with you, or with another entity as part of a private label credit card program or other extension of credit on behalf of such entity; or

(3) A proposed or actual securitization, secondary market sale (including sales of servicing rights), or similar transaction related to a transaction of the consumer.

(b) *Necessary to effect, administer, or enforce a transaction* means that the disclosure is:

(1) Required, or is one of the lawful or appropriate methods, to enforce your rights or the rights of other persons engaged in carrying out the financial transaction or providing the product or service; or

(2) Required, or is a usual, appropriate or acceptable method:

(i) To carry out the transaction or the product or service business of which the transaction is a part, and record, service, or maintain the consumer's account in the ordinary course of providing the financial service or financial product;

(ii) To administer or service benefits or claims relating to the transaction or the product or service business of which it is a part;

(iii) To provide a confirmation, statement, or other record of the transaction, or information on the status or value of the financial service or financial product to the consumer or the consumer's agent or broker;

(iv) To accrue or recognize incentives or bonuses associated with the transaction that are provided by you or any other party;

(v) To underwrite insurance at the consumer's request or for reinsurance purposes, or for any of the following purposes as they relate to a consumer's insurance: account administration, reporting, investigating, or preventing fraud or material misrepresentation, processing premium payments, processing insurance claims, administering insurance benefits (including utilization review activities),

participating in research projects, or as otherwise required or specifically permitted by Federal or State law; or

(vi) In connection with:

(A) The authorization, settlement, billing, processing, clearing, transferring, reconciling or collection of amounts charged, debited, or otherwise paid using a debit, credit, or other payment card, check, or account number, or by other payment means;

(B) The transfer of receivables, accounts, or interests therein; or

(C) The audit of debit, credit, or other payment information.

§ 332.15 Other exceptions to notice and opt out requirements.

(a) *Exceptions to opt out requirements.* The requirements for initial notice in § 332.4(a)(2), for the opt out in §§ 332.7 and 332.10, and for service providers and joint marketing in § 332.13 do not apply when you disclose nonpublic personal information:

(1) With the consent or at the direction of the consumer, provided that the consumer has not revoked the consent or direction;

(2) (i) To protect the confidentiality or security of your records pertaining to the consumer, service, product, or transaction;

(ii) To protect against or prevent actual or potential fraud, unauthorized transactions, claims, or other liability;

(iii) For required institutional risk control or for resolving consumer disputes or inquiries;

(iv) To persons holding a legal or beneficial interest relating to the consumer; or

(v) To persons acting in a fiduciary or representative capacity on behalf of the consumer;

(3) To provide information to insurance rate advisory organizations, guaranty funds or agencies, agencies that are rating you, persons that are assessing your compliance with industry standards, and your attorneys, accountants, and auditors;

(4) To the extent specifically permitted or required under other provisions of law and in accordance with the Right to Financial Privacy Act of 1978 (12 U.S.C. 3401 *et seq.*), to law enforcement agencies (including a federal functional regulator, the Secretary of the Treasury, with respect to 31 U.S.C. Chapter 53, Subchapter II (Records and Reports on Monetary Instruments and Transactions) and 12 U.S.C. Chapter 21 (Financial Recordkeeping), a State insurance authority, with respect to any person domiciled in that insurance authority's State that is engaged in providing insurance, and the Federal Trade Commission), self-regulatory organizations, or for an investigation on a matter related to public safety;

(5) (i) To a consumer reporting agency in accordance with the Fair Credit Reporting Act (15 U.S.C. 1681 *et seq.*), or

(ii) From a consumer report reported by a consumer reporting agency;

(6) In connection with a proposed or actual sale, merger, transfer, or exchange of all or a portion of a business or operating unit if the disclosure of nonpublic personal information concerns solely consumers of such business or unit; or

(7) (i) To comply with Federal, State, or local laws, rules and other applicable legal requirements;

(ii) To comply with a properly authorized civil, criminal, or regulatory investigation, or subpoena or summons by Federal, State, or local authorities; or

(iii) To respond to judicial process or government regulatory authorities having jurisdiction over you for examination, compliance, or other purposes as authorized by law.

(b) *Examples of consent and revocation of consent.* (1) A consumer may specifically consent to your disclosure to a nonaffiliated insurance company of the fact that the consumer has applied to you for a mortgage so that the insurance company can offer homeowner's insurance to the consumer.

(2) A consumer may revoke consent by subsequently exercising the right to opt out of future disclosures of nonpublic personal information as permitted under § 332.7(f).

Subpart D—Relation to Other Laws; Effective Date

§ 332.16 Protection of Fair Credit Reporting Act.

Nothing in this part shall be construed to modify, limit, or supersede the operation of the Fair Credit Reporting Act (15 U.S.C. 1681 *et seq.*), and no inference shall be drawn on the basis of the provisions of this part regarding whether information is transaction or experience information under section 603 of that Act.

§ 332.17 Relation to State laws.

(a) *In general.* This part shall not be construed as superseding, altering, or affecting any statute, regulation, order, or interpretation in effect in any State, except to the extent that such State statute, regulation, order, or interpretation is inconsistent with the provisions of this part, and then only to the extent of the inconsistency.

(b) *Greater protection under State law.* For purposes of this section, a State statute, regulation, order, or interpretation is not inconsistent with the provisions of this part if the protection such statute, regulation, order, or interpretation affords any consumer is greater than the protection provided under this part, as determined by the Federal Trade Commission, after consultation with the FDIC, on the Federal Trade Commission's own motion, or upon the petition of any interested party.

§ 332.18 Effective date; transition rule.

(a) *Effective date.* This part is effective November 13, 2000. In order to provide sufficient time for you to establish policies and systems to comply with the requirements of this part, the FDIC has extended the time for compliance with this part until July 1, 2001.

(b)(1) *Notice requirement for consumers who are your customers on the compliance date.* By July 1, 2001, you must have provided an initial notice, as required by § 332.4, to consumers who are your customers on July 1, 2001.

(2) *Example.* You provide an initial notice to consumers who are your customers on July 1, 2001, if, by that date, you have established a system for providing an initial notice to all new customers and have mailed the initial notice to all your existing customers.

(c) *Two-year grandfathering of service agreements.* Until July 1, 2002, a contract that you have entered into with a nonaffiliated third party to perform services for you or functions on your behalf satisfies the provisions of § 332.13(a)(1)(ii) of this part, even if the contract does not include a requirement that the third party maintain the confidentiality of nonpublic personal information, as long as you entered into the contract on or before July 1, 2000.

Appendix A to Part 332—Sample Clauses

Financial institutions, including a group of financial holding company affiliates that use a common privacy notice, may use the following sample clauses, if the clause is accurate for each institution that uses the notice. (Note that disclosure of certain information, such as assets and income, and information from a consumer reporting agency, may give rise to obligations under the Fair Credit Reporting Act, such as a requirement to permit a consumer to opt out of disclosures to affiliates or designation as a consumer reporting agency if disclosures are made to nonaffiliated third parties.)

A–1—Categories of information you collect (all institutions)

You may use this clause, as applicable, to meet the requirement of § 332.6(a)(1) to

describe the categories of nonpublic personal information you collect.

Sample Clause A–1:

We collect nonpublic personal information about you from the following sources:

- Information we receive from you on applications or other forms;
- Information about your transactions with us, our affiliates, or others; and
- Information we receive from a consumer reporting agency.

A–2—Categories of information you disclose (institutions that disclose outside of the exceptions)

You may use one of these clauses, as applicable, to meet the requirement of § 332.6(a)(2) to describe the categories of nonpublic personal information you disclose. You may use these clauses if you disclose nonpublic personal information other than as permitted by the exceptions in §§ 332.13, 332.14, and 332.15.

Sample Clause A–2, Alternative 1:

We may disclose the following kinds of nonpublic personal information about you:

- Information we receive from you on applications or other forms, such as [*provide illustrative examples, such as ''your name, address, social security number, assets, and income*'']];
- Information about your transactions with us, our affiliates, or others, such as [*provide illustrative examples, such as ''your account balance, payment history, parties to transactions, and credit card usage*'']; and
- Information we receive from a consumer reporting agency, such as [*provide illustrative examples, such as ''your creditworthiness and credit history*'']].

Sample Clause A–2, Alternative 2:

We may disclose all of the information that we collect, as described [*describe location in the notice, such as ''above'' or ''below*'']].

A–3—Categories of information you disclose and parties to whom you disclose (institutions that do not disclose outside of the exceptions)

You may use this clause, as applicable, to meet the requirements of §§ 332.6(a) (2), (3), and (4) to describe the categories of nonpublic personal information about customers and former customers that you disclose and the categories of affiliates and nonaffiliated third parties to whom you disclose. You may use this clause if you do not disclose nonpublic personal information to any party, other than as permitted by the exceptions in §§ 332.14 and 332.15.

Sample Clause A–3:

We do not disclose any nonpublic personal information about our customers or former customers to anyone, except as permitted by law.

A–4—Categories of parties to whom you disclose (institutions that disclose outside of the exceptions)

You may use this clause, as applicable, to meet the requirement of § 332.6(a)(3) to describe the categories of affiliates and nonaffiliated third parties to whom you disclose nonpublic personal information. You may use this clause if you disclose nonpublic personal information other than as permitted by the exceptions in §§ 332.13, 332.14, and 332.15, as well as when permitted by the exceptions in §§ 332.14 and 332.15.

Sample Clause A–4:

We may disclose nonpublic personal information about you to the following types of third parties:

- Financial service providers, such as [*provide illustrative examples, such as ''mortgage bankers, securities broker-dealers, and insurance agents*'']];
- Non-financial companies, such as [*provide illustrative examples, such as ''retailers, direct marketers, airlines, and publishers*'']]; and
- Others, such as [*provide illustrative examples, such as ''non-profit organizations*'']].

We may also disclose nonpublic personal information about you to nonaffiliated third parties as permitted by law.

A–5—Service provider/joint marketing exception

You may use one of these clauses, as applicable, to meet the requirements of § 332.6(a)(5) related to the exception for service providers and joint marketers in § 332.13. If you disclose nonpublic personal information under this exception, you must describe the categories of nonpublic personal information you disclose and the categories of third parties with whom you have contracted.

Sample Clause A–5, Alternative 1:

We may disclose the following information to companies that perform marketing services on our behalf or to other financial institutions with whom we have joint marketing agreements:

- Information we receive from you on applications or other forms, such as [*provide illustrative examples, such as ''your name, address, social security number, assets, and income*'']];
- Information about your transactions with us, our affiliates, or others, such as [*provide illustrative examples, such as ''your account balance, payment history, parties to transactions, and credit card usage*'']]; and
- Information we receive from a consumer reporting agency, such as [*provide illustrative examples, such as ''your creditworthiness and credit history*'']].

Sample Clause A–5, Alternative 2:

We may disclose all of the information we collect, as described [*describe location in the notice, such as ''above'' or ''below*'']] to companies that perform marketing services on our behalf or to other financial institutions with whom we have joint marketing agreements.

A–6—Explanation of opt out right (institutions that disclose outside of the exceptions)

You may use this clause, as applicable, to meet the requirement of § 332.6(a)(6) to provide an explanation of the consumer's right to opt out of the disclosure of nonpublic personal information to nonaffiliated third parties, including the method(s) by which the consumer may exercise that right. You may use this clause if you disclose nonpublic personal information other than as permitted by the exceptions in §§ 332.13, 332.14, and 332.15.

Sample Clause A–6:

If you prefer that we not disclose nonpublic personal information about you to nonaffiliated third parties, you may opt out of those disclosures, that is, you may direct us not to make those disclosures (other than disclosures permitted by law). If you wish to opt out of disclosures to nonaffiliated third parties, you may [*describe a reasonable means of opting out, such as ''call the following toll-free number: (insert number)*]].

A–7—Confidentiality and security (all institutions)

You may use this clause, as applicable, to meet the requirement of § 332.6(a)(8) to describe your policies and practices with respect to protecting the confidentiality and security of nonpublic personal information.

Sample Clause A–7:

We restrict access to nonpublic personal information about you to [*provide an appropriate description, such as ''those employees who need to know that information to provide products or services to you*'']]. We maintain physical, electronic, and procedural safeguards that comply with federal standards to guard your nonpublic personal information.

By order of the Board of Directors.

Federal Deposit Insurance Corporation.

Dated at Washington, DC, this 10th day of May, 2000.

Robert E. Feldman,

Executive Secretary.

Office of Thrift Supervision

12 CFR Chapter V

For the reasons set out in the joint preamble, OTS amends Chapter V, Title 12 of the Code of Federal Regulations by adding part 573 to read as follows:

PART 573—PRIVACY OF CONSUMER FINANCIAL INFORMATION

Sec.

573.1 Purpose and scope.
573.2 Rule of construction.
573.3 Definitions.

Subpart A—Privacy and Opt Out Notices

573.4 Initial privacy notice to consumers required.
573.5 Annual privacy notice to customers required.
573.6 Information to be included in privacy notices.
573.7 Form of opt out notice to consumers; opt out methods.
573.8 Revised privacy notices.
573.9 Delivering privacy and opt out notices.

Subpart B—Limits on Disclosures

573.10 Limitation on disclosure of nonpublic personal information to nonaffiliated third parties.
573.11 Limits on redisclosure and reuse of information.
573.12 Limits on sharing account number information for marketing purposes.

Subpart C—Exceptions

573.13 Exception to opt out requirements for service providers and joint marketing.
573.14 Exceptions to notice and opt out requirements for processing and servicing transactions.
573.15 Other exceptions to notice and opt out requirements.

Subpart D—Relation to Other Laws; Effective Date

573.16 Protection of Fair Credit Reporting Act.
573.17 Relation to State laws.
573.18 Effective date; transition rule.

Appendix A to Part 573—Sample Clauses

Authority: 12 U.S.C. 1462a, 1463, 1464, 1828; 15 U.S.C. 6801 *et seq.*

§ 573.1 Purpose and scope.

(a) *Purpose.* This part governs the treatment of nonpublic personal information about consumers by the financial institutions listed in paragraph (b) of this section. This part:

(1) Requires a financial institution to provide notice to customers about its privacy policies and practices;

(2) Describes the conditions under which a financial institution may disclose nonpublic personal information about consumers to nonaffiliated third parties; and

(3) Provides a method for consumers to prevent a financial institution from disclosing that information to most nonaffiliated third parties by ''opting out'' of that disclosure, subject to the exceptions in §§ 573.13, 573.14, and 573.15.

(b) *Scope.* (1) This part applies only to nonpublic personal information about individuals who obtain financial products or services primarily for personal, family, or household purposes from the institutions listed below. This part does not apply to information about companies or about individuals who obtain financial products or services for business, commercial, or agricultural purposes. This part applies to savings associations whose deposits are insured by the Federal Deposit Insurance Corporation, and any subsidiaries of such savings associations, but not subsidiaries that are brokers, dealers, persons providing insurance, investment companies, or investment advisers. This part refers to these entities as ''you.''

(2) Nothing in this part modifies, limits, or supersedes the standards governing individually identifiable health information promulgated by the Secretary of Health and Human Services under the authority of sections 262 and 264 of the Health Insurance Portability and Accountability Act of 1996 (42 U.S.C. 1320d–1320d–8).

§ 573.2 Rule of construction.

The examples in this part and the sample clauses in appendix A of this part are not exclusive. Compliance with an example or use of a sample clause, to the extent applicable, constitutes compliance with this part.

§ 573.3 Definitions.

As used in this part, unless the context requires otherwise:

(a) *Affiliate* means any company that controls, is controlled by, or is under common control with another company.

(b)(1) *Clear and conspicuous* means that a notice is reasonably understandable and designed to call attention to the nature and significance of the information in the notice.

(2) *Examples*—(i) *Reasonably understandable.* You make your notice reasonably understandable if you:

(A) Present the information in the notice in clear, concise sentences, paragraphs, and sections;

(B) Use short explanatory sentences or bullet lists whenever possible;

(C) Use definite, concrete, everyday words and active voice whenever possible;

(D) Avoid multiple negatives;

(E) Avoid legal and highly technical business terminology whenever possible; and

(F) Avoid explanations that are imprecise and readily subject to different interpretations.

(ii) *Designed to call attention.* You design your notice to call attention to the nature and significance of the information in it if you:

(A) Use a plain-language heading to call attention to the notice;

(B) Use a typeface and type size that are easy to read;

(C) Provide wide margins and ample line spacing;

(D) Use boldface or italics for key words; and

(E) In a form that combines your notice with other information, use distinctive type size, style, and graphic devices, such as shading or sidebars, when you combine your notice with other information.

(iii) *Notices on web sites.* If you provide a notice on a web page, you design your notice to call attention to the nature and significance of the information in it if you use text or visual cues to encourage scrolling down the page if necessary to view the entire notice and ensure that other elements on the web site (such as text, graphics, hyperlinks, or sound) do not distract attention from the notice, and you either:

(A) Place the notice on a screen that consumers frequently access, such as a page on which transactions are conducted; or

(B) Place a link on a screen that consumers frequently access, such as a page on which transactions are conducted, that connects directly to the notice and is labeled appropriately to convey the importance, nature, and relevance of the notice.

(c) *Collect* means to obtain information that you organize or can retrieve by the name of an individual or by identifying number, symbol, or other identifying particular assigned to the individual, irrespective of the source of the underlying information.

(d) *Company* means any corporation, limited liability company, business trust, general or limited partnership, association, or similar organization.

(e)(1) *Consumer* means an individual who obtains or has obtained a financial product or service from you that is to be used primarily for personal, family, or household purposes, or that individual's legal representative.

(2) *Examples*—(i) An individual who applies to you for credit for personal, family, or household purposes is a consumer of a financial service, regardless of whether the credit is extended.

(ii) An individual who provides nonpublic personal information to you in order to obtain a determination about whether he or she may qualify for a loan to be used primarily for personal, family, or household purposes is a consumer of a financial service, regardless of whether the loan is extended.

(iii) An individual who provides nonpublic personal information to you in connection with obtaining or seeking to obtain financial, investment, or economic advisory services is a consumer regardless of whether you establish a continuing advisory relationship.

(iv) If you hold ownership or servicing rights to an individual's loan that is used primarily for personal, family, or household purposes, the individual is your consumer, even if you hold those rights in conjunction with one or more other institutions. (The individual is also a consumer with respect to the other financial institutions involved.) An individual who has a loan in which you have ownership or servicing rights is your consumer, even if you, or another institution with those rights, hire an agent to collect on the loan.

(v) An individual who is a consumer of another financial institution is not your consumer solely because you act as agent for, or provide processing or other services to, that financial institution.

(vi) An individual is not your consumer solely because he or she has designated you as trustee for a trust.

(vii) An individual is not your consumer solely because he or she is a beneficiary of a trust for which you are a trustee.

(viii) An individual is not your consumer solely because he or she is a participant or a beneficiary of an employee benefit plan that you sponsor or for which you act as a trustee or fiduciary.

(f) *Consumer reporting agency* has the same meaning as in section 603(f) of the Fair Credit Reporting Act (15 U.S.C. 1681a(f)).

(g) *Control* of a company means:

(1) Ownership, control, or power to vote 25 percent or more of the outstanding shares of any class of voting security of the company, directly or indirectly, or acting through one or more other persons;

(2) Control in any manner over the election of a majority of the directors, trustees, or general partners (or individuals exercising similar functions) of the company; or

(3) The power to exercise, directly or indirectly, a controlling influence over the management or policies of the company, as the OTS determines.

(h) *Customer* means a consumer who has a customer relationship with you.

(i)(1) *Customer relationship* means a continuing relationship between a consumer and you under which you provide one or more financial products or services to the consumer that are to be used primarily for personal, family, or household purposes.

(2) *Examples*—(i) *Continuing relationship.* A consumer has a continuing relationship with you if the consumer:

(A) Has a deposit or investment account with you;

(B) Obtains a loan from you;

(C) Has a loan for which you own the servicing rights;

(D) Purchases an insurance product from you;

(E) Holds an investment product through you, such as when you act as a custodian for securities or for assets in an Individual Retirement Arrangement;

(F) Enters into an agreement or understanding with you whereby you undertake to arrange or broker a home mortgage loan for the consumer;

(G) Enters into a lease of personal property with you; or

(H) Obtains financial, investment, or economic advisory services from you for a fee.

(ii) *No continuing relationship.* A consumer does not, however, have a continuing relationship with you if:

(A) The consumer obtains a financial product or service only in isolated transactions, such as using your ATM to withdraw cash from an account at another financial institution or purchasing a cashier's check or money order;

(B) You sell the consumer's loan and do not retain the rights to service that loan; or

(C) You sell the consumer airline tickets, travel insurance, or traveler's checks in isolated transactions.

(j) Federal functional regulator means:

(1) The Board of Governors of the Federal Reserve System;

(2) The Office of the Comptroller of the Currency;

(3) The Board of Directors of the Federal Deposit Insurance Corporation;

(4) The Director of the Office of Thrift Supervision;

(5) The National Credit Union Administration Board; and

(6) The Securities and Exchange Commission.

(k)(1) *Financial institution* means any institution the business of which is engaging in activities that are financial in nature or incidental to such financial activities as described in section 4(k) of the Bank Holding Company Act of 1956 (12 U.S.C. 1843(k)).

(2) *Financial institution* does not include:

(i) Any person or entity with respect to any financial activity that is subject to the jurisdiction of the Commodity Futures Trading Commission under the Commodity Exchange Act (7 U.S.C. 1 *et seq.*);

(ii) The Federal Agricultural Mortgage Corporation or any entity chartered and operating under the Farm Credit Act of 1971 (12 U.S.C. 2001 *et seq.*); or

(iii) Institutions chartered by Congress specifically to engage in securitizations, secondary market sales (including sales of servicing rights), or similar transactions related to a transaction of a consumer, as long as such institutions do not sell or transfer nonpublic personal information to a nonaffiliated third party.

(l)(1) *Financial product or service* means any product or service that a financial holding company could offer by engaging in an activity that is financial in nature or incidental to such a financial activity under section 4(k) of the Bank Holding Company Act of 1956 (12 U.S.C. 1843(k)).

(2) *Financial service* includes your evaluation or brokerage of information that you collect in connection with a request or an application from a consumer for a financial product or service.

(m)(1) *Nonaffiliated third party* means any person except:

(i) Your affiliate; or

(ii) A person employed jointly by you and any company that is not your affiliate (but *nonaffiliated third party* includes the other company that jointly employs the person).

(2) *Nonaffiliated third party* includes any company that is an affiliate solely by virtue of your or your affiliate's direct or indirect ownership or control of the company in conducting merchant banking or investment banking activities of the type described in section 4(k)(4)(H) or insurance company investment activities of the type described in section 4(k)(4)(I) of the Bank Holding Company Act of 1956 (12 U.S.C. 1843(k)(4)(H) and (I)).

(n)(1) *Nonpublic personal information* means:

(i) Personally identifiable financial information; and

(ii) Any list, description, or other grouping of consumers (and publicly available information pertaining to them) that is derived using any personally identifiable financial information that is not publicly available.

(2) *Nonpublic personal information* does not include:

(i) Publicly available information, except as included on a list described in paragraph (n)(1)(ii) of this section; or

(ii) Any list, description, or other grouping of consumers (and publicly available information pertaining to them) that is derived without using any personally identifiable financial information that is not publicly available.

(3) *Examples of lists*—(i) Nonpublic personal information includes any list of individuals' names and street addresses that is derived in whole or in part using personally identifiable financial information that is not publicly available, such as account numbers.

(ii) Nonpublic personal information does not include any list of individuals' names and addresses that contains only publicly available information, is not derived in whole or in part using personally identifiable financial information that is not publicly available, and is not disclosed in a manner that indicates that any of the individuals on the list is a consumer of a financial institution.

(o)(1) *Personally identifiable financial information* means any information:

(i) A consumer provides to you to obtain a financial product or service from you;

(ii) About a consumer resulting from any transaction involving a financial product or service between you and a consumer; or

(iii) You otherwise obtain about a consumer in connection with providing a financial product or service to that consumer.

(2) *Examples*—(i) *Information included.* Personally identifiable financial information includes:

(A) Information a consumer provides to you on an application to obtain a loan, credit card, or other financial product or service;

(B) Account balance information, payment history, overdraft history, and credit or debit card purchase information;

(C) The fact that an individual is or has been one of your customers or has obtained a financial product or service from you;

(D) Any information about your consumer if it is disclosed in a manner that indicates that the individual is or has been your consumer;

(E) Any information that a consumer provides to you or that you or your agent otherwise obtain in connection with collecting on a loan or servicing a loan;

(F) Any information you collect through an Internet ''cookie'' (an information collecting device from a web server); and

(G) Information from a consumer report.

(ii) *Information not included.* Personally identifiable financial information does not include:

(A) A list of names and addresses of customers of an entity that is not a financial institution; and

(B) Information that does not identify a consumer, such as aggregate information or blind data that does not contain personal identifiers such as account numbers, names, or addresses.

(p)(1) *Publicly available information* means any information that you have a reasonable basis to believe is lawfully made available to the general public from:

(i) Federal, State, or local government records;

(ii) Widely distributed media; or

(iii) Disclosures to the general public that are required to be made by Federal, State, or local law.

(2) *Reasonable basis.* You have a reasonable basis to believe that information is lawfully made available to the general public if you have taken steps to determine:

(i) That the information is of the type that is available to the general public; and

(ii) Whether an individual can direct that the information not be made available to the general public and, if so, that your consumer has not done so.

(3) *Examples*—(i) *Government records.* Publicly available information in government records includes information in government real estate records and security interest filings.

(ii) *Widely distributed media.* Publicly available information from widely distributed media includes information from a telephone book, a television or radio program, a newspaper, or a web site that is available to the general public on an unrestricted basis. A web site is not restricted merely because an Internet service provider or a site operator requires a fee or a password, so long as access is available to the general public.

(iii) *Reasonable basis*—(A) You have a reasonable basis to believe that mortgage information is lawfully made available to the general public if you have determined that the information is of the type included on the public record in the jurisdiction where the mortgage would be recorded.

(B) You have a reasonable basis to believe that an individual's telephone number is lawfully made available to the general public if you have located the telephone number in the telephone book or the consumer has informed you that the telephone number is not unlisted.

Subpart A—Privacy and Opt Out Notices

§ 573.4 Initial privacy notice to consumers required.

(a) *Initial notice requirement.* You must provide a clear and conspicuous notice that accurately reflects your privacy policies and practices to:

(1) *Customer.* An individual who becomes your customer, not later than when you establish a customer relationship, except as provided in paragraph (e) of this section; and

(2) *Consumer.* A consumer, before you disclose any nonpublic personal information about the consumer to any nonaffiliated third party, if you make such a disclosure other than as authorized by §§ 573.14 and 573.15.

(b) *When initial notice to a consumer is not required.* You are not required to provide an initial notice to a consumer under paragraph (a) of this section if:

(1) You do not disclose any nonpublic personal information about the consumer to any nonaffiliated third party, other than as authorized by §§ 573.14 and 573.15; and

(2) You do not have a customer relationship with the consumer.

(c) *When you establish a customer relationship*—(1) *General rule.* You establish a customer relationship when you and the consumer enter into a continuing relationship.

(2) *Special rule for loans.*—You establish a customer relationship with a consumer when you originate a loan to the consumer for personal, family, or household purposes. If you subsequently transfer the servicing rights to that loan to another financial institution, the customer relationship transfers with the servicing rights.

(3)(i) *Examples of establishing customer relationship.* You establish a customer relationship when the consumer:

(A) Opens a credit card account with you;

(B) Executes the contract to open a deposit account with you, obtains credit from you, or purchases insurance from you;

(C) Agrees to obtain financial, economic, or investment advisory services from you for a fee; or

(D) Becomes your client for the purpose of your providing credit counseling or tax preparation services.

(ii) *Examples of loan rule.* You establish a customer relationship with a consumer who obtains a loan for personal, family, or household purposes when you:

(A) Originate the loan to the consumer; or

(B) Purchase the servicing rights to the consumer's loan.

(d) *Existing customers.* When an existing customer obtains a new financial product or service from you that is to be used primarily for personal, family, or household purposes, you satisfy the initial notice requirements of paragraph (a) of this section as follows:

(1) You may provide a revised privacy notice, under § 573.8, that covers the customer's new financial product or service; or

(2) If the initial, revised, or annual notice that you most recently provided to that customer was accurate with respect to the new financial product or service, you do not need to provide a new privacy notice under paragraph (a) of this section.

(e) *Exceptions to allow subsequent delivery of notice.* (1) You may provide the initial notice required by paragraph (a)(1) of this section within a reasonable time after you establish a customer relationship if:

(i) Establishing the customer relationship is not at the customer's election; or

(ii) Providing notice not later than when you establish a customer relationship would substantially delay the customer's transaction and the customer agrees to receive the notice at a later time.

(2) *Examples of exceptions*—(i) *Not at customer's election.* Establishing a customer relationship is not at the customer's election if you acquire a

customer's deposit liability or the servicing rights to a customer's loan from another financial institution and the customer does not have a choice about your acquisition.

(ii) *Substantial delay of customer's transaction.* Providing notice not later than when you establish a customer relationship would substantially delay the customer's transaction when:

(A) You and the individual agree over the telephone to enter into a customer relationship involving prompt delivery of the financial product or service; or

(B) You establish a customer relationship with an individual under a program authorized by Title IV of the Higher Education Act of 1965 (20 U.S.C. 1070 *et seq.*) or similar student loan programs where loan proceeds are disbursed promptly without prior communication between you and the customer.

(iii) *No substantial delay of customer's transaction.* Providing notice not later than when you establish a customer relationship would not substantially delay the customer's transaction when the relationship is initiated in person at your office or through other means by which the customer may view the notice, such as on a web site.

(f) *Delivery.* When you are required to deliver an initial privacy notice by this section, you must deliver it according to § 573.9. If you use a short-form initial notice for non-customers according to § 573.6(d), you may deliver your privacy notice according to § 573.6(d)(3).

§ 573.5 Annual privacy notice to customers required.

(a)(1) *General rule.* You must provide a clear and conspicuous notice to customers that accurately reflects your privacy policies and practices not less than annually during the continuation of the customer relationship. *Annually* means at least once in any period of 12 consecutive months during which that relationship exists. You may define the 12-consecutive-month period, but you must apply it to the customer on a consistent basis.

(2) *Example.* You provide a notice annually if you define the 12-consecutive-month period as a calendar year and provide the annual notice to the customer once in each calendar year following the calendar year in which you provided the initial notice. For example, if a customer opens an account on any day of year 1, you must provide an annual notice to that customer by December 31 of year 2.

(b)(1) *Termination of customer relationship.* You are not required to provide an annual notice to a former customer.

(2) *Examples.* Your customer becomes a former customer when:

(i) In the case of a deposit account, the account is inactive under your policies;

(ii) In the case of a closed-end loan, the customer pays the loan in full, you charge off the loan, or you sell the loan without retaining servicing rights;

(iii) In the case of a credit card relationship or other open-end credit relationship, you no longer provide any statements or notices to the customer concerning that relationship or you sell the credit card receivables without retaining servicing rights; or

(iv) You have not communicated with the customer about the relationship for a period of 12 consecutive months, other than to provide annual privacy notices or promotional material.

(c) *Special rule for loans.* If you do not have a customer relationship with a consumer under the special rule for loans in § 573.4(c)(2), then you need not provide an annual notice to that consumer under this section.

(d) *Delivery.* When you are required to deliver an annual privacy notice by this section, you must deliver it according to § 573.9.

§ 573.6 Information to be included privacy notices.

(a) *General rule.* The initial, annual, and revised privacy notices that you provide under §§ 573.4, 573.5, 573.8 must include each of the following items of information, in addition to any other information you wish to provide, that applies to you and to the consumers to whom you send your privacy notice:

(1) The categories of nonpublic personal information that you collect;

(2) The categories of nonpublic personal information that you disclose;

(3) The categories of affiliates and nonaffiliated third parties to whom you disclose nonpublic personal information, other than those parties to whom you disclose information under §§ 573.14 and 573.15;

(4) The categories of nonpublic personal information about your former customers that you disclose and the categories of affiliates and nonaffiliated third parties to whom you disclose nonpublic personal information about your former customers, other than those parties to whom you disclose information under §§ 573.14 and 573.15;

(5) If you disclose nonpublic personal information to a nonaffiliated third party under § 573.13 (and no other exception in § 573.14 or 573.15 applies to that disclosure), a separate statement of the categories of information you disclose and the categories of third parties with whom you have contracted;

(6) An explanation of the consumer's right under § 573.10(a) to opt out of the disclosure of nonpublic personal information to nonaffiliated third parties, including the method(s) by which the consumer may exercise that right at that time;

(7) Any disclosures that you make under section 603(d)(2)(A)(iii) of the Fair Credit Reporting Act (15 U.S.C. 1681a(d)(2)(A)(iii)) (that is, notices regarding the ability to opt out of disclosures of information among affiliates);

(8) Your policies and practices with respect to protecting the confidentiality and security of nonpublic personal information; and

(9) Any disclosure that you make under paragraph (b) of this section.

(b) *Description of nonaffiliated third parties subject to exceptions.* If you disclose nonpublic personal information to third parties as authorized under §§ 573.14 and 573.15, you are not required to list those exceptions in the initial or annual privacy notices required by §§ 573.4 and 573.5. When describing the categories with respect to those parties, you are required to state only that you make disclosures to other nonaffiliated third parties as permitted by law.

(c) *Examples*—(1) *Categories of nonpublic personal information that you collect.* You satisfy the requirement to categorize the nonpublic personal information that you collect if you list the following categories, as applicable:

(i) Information from the consumer;

(ii) Information about the consumer's transactions with you or your affiliates;

(iii) Information about the consumer's transactions with nonaffiliated third parties; and

(iv) Information from a consumer reporting agency.

(2) *Categories of nonpublic personal information you disclose*—(i) You satisfy the requirement to categorize the nonpublic personal information that you disclose if you list the categories described in paragraph (c)(1) of this section, as applicable, and a few examples to illustrate the types of information in each category.

(ii) If you reserve the right to disclose all of the nonpublic personal information about consumers that you collect, you may simply state that fact without describing the categories or examples of the nonpublic personal information you disclose.

(3) *Categories of affiliates and nonaffiliated third parties to whom you disclose.* You satisfy the requirement to categorize the affiliates and nonaffiliated third parties to whom you disclose nonpublic personal information

if you list the following categories, as applicable, and a few examples to illustrate the types of third parties in each category.

(i) Financial service providers;

(ii) Non-financial companies; and

(iii) Others.

(4) *Disclosures under exception for service providers and joint marketers.* If you disclose nonpublic personal information under the exception in § 573.13 to a nonaffiliated third party to market products or services that you offer alone or jointly with another financial institution, you satisfy the disclosure requirement of paragraph (a)(5) of this section if you:

(i) List the categories of nonpublic personal information you disclose, using the same categories and examples you used to meet the requirements of paragraph (a)(2) of this section, as applicable; and

(ii) State whether the third party is:

(A) A service provider that performs marketing services on your behalf or on behalf of you and another financial institution; or

(B) A financial institution with whom you have a joint marketing agreement.

(5) *Simplified notices.* If you do not disclose, and do not wish to reserve the right to disclose, nonpublic personal information about customers or former customers to affiliates or nonaffiliated third parties except as authorized under §§ 573.14 and 573.15, you may simply state that fact, in addition to the information you must provide under paragraphs (a)(1), (a)(8), (a)(9), and (b) of this section.

(6) *Confidentiality and security.* You describe your policies and practices with respect to protecting the confidentiality and security of nonpublic personal information if you do both of the following:

(i) Describe in general terms who is authorized to have access to the information; and

(ii) State whether you have security practices and procedures in place to ensure the confidentiality of the information in accordance with your policy. You are not required to describe technical information about the safeguards you use.

(d) *Short-form initial notice with opt out notice for non-customers*—(1) You may satisfy the initial notice requirements in §§ 573.4(a)(2), 573.7(b), and 573.7(c) for a consumer who is not a customer by providing a short-form initial notice at the same time as you deliver an opt out notice as required in § 573.7.

(2) A short-form initial notice must:

(i) Be clear and conspicuous;

(ii) State that your privacy notice is available upon request; and

(iii) Explain a reasonable means by which the consumer may obtain that notice.

(3) You must deliver your short-form initial notice according to § 573.9. You are not required to deliver your privacy notice with your short-form initial notice. You instead may simply provide the consumer a reasonable means to obtain your privacy notice. If a consumer who receives your short-form notice requests your privacy notice, you must deliver your privacy notice according to § 573.9.

(4) *Examples of obtaining privacy notice.* You provide a reasonable means by which a consumer may obtain a copy of your privacy notice if you:

(i) Provide a toll-free telephone number that the consumer may call to request the notice; or

(ii) For a consumer who conducts business in person at your office, maintain copies of the notice on hand that you provide to the consumer immediately upon request.

(e) *Future disclosures.* Your notice may include:

(1) Categories of nonpublic personal information that you reserve the right to disclose in the future, but do not currently disclose; and

(2) Categories of affiliates or nonaffiliated third parties to whom you reserve the right in the future to disclose, but to whom you do not currently disclose, nonpublic personal information.

(f) *Sample clauses.* Sample clauses illustrating some of the notice content required by this section are included in appendix A of this part.

§ 573.7 Form of opt out notice to consumers; opt out methods.

(a)(1) *Form of opt out notice.* If you are required to provide an opt out notice under § 573.10(a), you must provide a clear and conspicuous notice to each of your consumers that accurately explains the right to opt out under that section. The notice must state:

(i) That you disclose or reserve the right to disclose nonpublic personal information about your consumer to a nonaffiliated third party;

(ii) That the consumer has the right to opt out of that disclosure; and

(iii) A reasonable means by which the consumer may exercise the opt out right.

(2) *Examples*—(i) *Adequate opt out notice.* You provide adequate notice that the consumer can opt out of the disclosure of nonpublic personal information to a nonaffiliated third party if you:

(A) Identify all of the categories of nonpublic personal information that you disclose or reserve the right to disclose, and all of the categories of nonaffiliated third parties to which you disclose the information, as described in § 573.6(a)(2) and (3), and state that the consumer can opt out of the disclosure of that information; and

(B) Identify the financial products or services that the consumer obtains from you, either singly or jointly, to which the opt out direction would apply.

(ii) *Reasonable opt out means.* You provide a reasonable means to exercise an opt out right if you:

(A) Designate check-off boxes in a prominent position on the relevant forms with the opt out notice;

(B) Include a reply form together with the opt out notice;

(C) Provide an electronic means to opt out, such as a form that can be sent via electronic mail or a process at your web site, if the consumer agrees to the electronic delivery of information; or

(D) Provide a toll-free telephone number that consumers may call to opt out.

(iii) *Unreasonable opt out means.* You *do not* provide a reasonable means of opting out if:

(A) The only means of opting out is for the consumer to write his or her own letter to exercise that opt out right; or

(B) The only means of opting out as described in any notice subsequent to the initial notice is to use a check-off box that you provided with the initial notice but did not include with the subsequent notice.

(iv) *Specific opt out means.* You may require each consumer to opt out through a specific means, as long as that means is reasonable for that consumer.

(b) *Same form as initial notice permitted.* You may provide the opt out notice together with or on the same written or electronic form as the initial notice you provide in accordance with § 573.4.

(c) *Initial notice required when opt out notice delivered subsequent to initial notice.* If you provide the opt out notice later than required for the initial notice in accordance with § 573.4, you must also include a copy of the initial notice with the opt out notice in writing or, if the consumer agrees, electronically.

(d) *Joint relationships*–(1) If two or more consumers jointly obtain a financial product or service from you, you may provide a single opt out notice. Your opt out notice must explain how you will treat an opt out direction by a joint consumer (as explained in paragraph (d)(5) of this section).

(2) Any of the joint consumers may exercise the right to opt out. You may either:

(i) Treat an opt out direction by a joint consumer as applying to all of the associated joint consumers; or

(ii) Permit each joint consumer to opt out separately.

(3) If you permit each joint consumer to opt out separately, you must permit one of the joint consumers to opt out on behalf of all of the joint consumers.

(4) You may not require *all* joint consumers to opt out before you implement *any* opt out direction.

(5) *Example.* If John and Mary have a joint checking account with you and arrange for you to send statements to John's address, you may do any of the following, but you must explain in your opt out notice which opt out policy you will follow:

(i) Send a single opt out notice to John's address, but you must accept an opt out direction from either John or Mary.

(ii) Treat an opt out direction by either John or Mary as applying to the entire account. If you do so, and John opts out, you may not require Mary to opt out as well before implementing John's opt out direction.

(iii) Permit John and Mary to make different opt out directions. If you do so:

(A) You must permit John and Mary to opt out for each other;

(B) If both opt out, you must permit both to notify you in a single response (such as on a form or through a telephone call); and

(C) If John opts out and Mary does not, you may only disclose nonpublic personal information about Mary, but not about John and not about John and Mary jointly.

(e) *Time to comply with opt out.* You must comply with a consumer's opt out direction as soon as reasonably practicable after you receive it.

(f) *Continuing right to opt out.* A consumer may exercise the right to opt out at any time.

(g) *Duration of consumer's opt out direction*–(1) A consumer's direction to opt out under this section is effective until the consumer revokes it in writing or, if the consumer agrees, electronically.

(2) When a customer relationship terminates, the customer's opt out direction continues to apply to the nonpublic personal information that you collected during or related to that relationship. If the individual subsequently establishes a new customer relationship with you, the opt out direction that applied to the former relationship does not apply to the new relationship.

(h) *Delivery.* When you are required to deliver an opt out notice by this section, you must deliver it according to § 573.9.

§ 573.8 Revised privacy notices.

(a) *General rule.* Except as otherwise authorized in this part, you must not, directly or through any affiliate, disclose any nonpublic personal information about a consumer to a nonaffiliated third party other than as described in the initial notice that you provided to that consumer under § 573.4, unless:

(1) You have provided to the consumer a clear and conspicuous revised notice that accurately describes your policies and practices;

(2) You have provided to the consumer a new opt out notice;

(3) You have given the consumer a reasonable opportunity, before you disclose the information to the nonaffiliated third party, to opt out of the disclosure; and

(4) The consumer does not opt out.

(b) *Examples*—(1) Except as otherwise permitted by §§ 573.13, 573.14, and 573.15, you must provide a revised notice before you:

(i) Disclose a new category of nonpublic personal information to any nonaffiliated third party;

(ii) Disclose nonpublic personal information to a new category of nonaffiliated third party; or

(iii) Disclose nonpublic personal information about a former customer to a nonaffiliated third party, if that former customer has not had the opportunity to exercise an opt out right regarding that disclosure.

(2) A revised notice is not required if you disclose nonpublic personal information to a new nonaffiliated third party that you adequately described in your prior notice.

(c) *Delivery.* When you are required to deliver a revised privacy notice by this section, you must deliver it according to § 573.9.

§ 573.9 Delivering privacy and opt out notices.

(a) *How to provide notices.* You must provide any privacy notices and opt out notices, including short-form initial notices, that this part requires so that each consumer can reasonably be expected to receive actual notice in writing or, if the consumer agrees, electronically.

(b) (1) *Examples of reasonable expectation of actual notice.* You may reasonably expect that a consumer will receive actual notice if you:

(i) Hand-deliver a printed copy of the notice to the consumer;

(ii) Mail a printed copy of the notice to the last known address of the consumer;

(iii) For the consumer who conducts transactions electronically, post the notice on the electronic site and require the consumer to acknowledge receipt of the notice as a necessary step to obtaining a particular financial product or service;

(iv) For an isolated transaction with the consumer, such as an ATM transaction, post the notice on the ATM screen and require the consumer to acknowledge receipt of the notice as a necessary step to obtaining the particular financial product or service.

(2) *Examples of unreasonable expectation of actual notice.* You may *not*, however, reasonably expect that a consumer will receive actual notice of your privacy policies and practices if you:

(i) Only post a sign in your branch or office or generally publish advertisements of your privacy policies and practices;

(ii) Send the notice via electronic mail to a consumer who does not obtain a financial product or service from you electronically.

(c) *Annual notices only.* You may reasonably expect that a customer will receive actual notice of your annual privacy notice if:

(1) The customer uses your web site to access financial products and services electronically and agrees to receive notices at the web site, and you post your current privacy notice continuously in a clear and conspicuous manner on the web site; or

(2) The customer has requested that you refrain from sending any information regarding the customer relationship, and your current privacy notice remains available to the customer upon request.

(d) *Oral description of notice insufficient.* You may not provide any notice required by this part solely by orally explaining the notice, either in person or over the telephone.

(e) *Retention or accessibility of notices for customers*–(1) For customers only, you must provide the initial notice required by § 573.4(a)(1), the annual notice required by § 573.5(a), and the revised notice required by § 573.8 so that the customer can retain them or obtain them later in writing or, if the customer agrees, electronically.

(2) *Examples of retention or accessibility.* You provide a privacy notice to the customer so that the customer can retain it or obtain it later if you:

(i) Hand-deliver a printed copy of the notice to the customer;

(ii) Mail a printed copy of the notice to the last known address of the customer; or

(iii) Make your current privacy notice available on a web site (or a link to another web site) for the customer who

obtains a financial product or service electronically and agrees to receive the notice at the web site.

(f) *Joint notice with other financial institutions.* You may provide a joint notice from you and one or more of your affiliates or other financial institutions, as identified in the notice, as long as the notice is accurate with respect to you and the other institutions.

(g) *Joint relationships.* If two or more consumers jointly obtain a financial product or service from you, you may satisfy the initial, annual, and revised notice requirements of §§ 573.4(a), 573.5(a), and 573.8(a), respectively, by providing one notice to those consumers jointly.

Subpart B—Limits on Disclosures

§ 573.10 Limits on disclosure of nonpublic personal information to nonaffiliated third parties.

(a)(1) *Conditions for disclosure.* Except as otherwise authorized in this part, you may not, directly or through any affiliate, disclose any nonpublic personal information about a consumer to a nonaffiliated third party unless:

(i) You have provided to the consumer an initial notice as required under § 573.4;

(ii) You have provided to the consumer an opt out notice as required in § 573.7;

(iii) You have given the consumer a reasonable opportunity, before you disclose the information to the nonaffiliated third party, to opt out of the disclosure; and

(iv) The consumer does not opt out.

(2) *Opt out definition.* Opt out means a direction by the consumer that you not disclose nonpublic personal information about that consumer to a nonaffiliated third party, other than as permitted by §§ 573.13, 573.14, and 573.15.

(3) *Examples of reasonable opportunity to opt out.* You provide a consumer with a reasonable opportunity to opt out if:

(i) *By mail.* You mail the notices required in paragraph (a)(1) of this section to the consumer and allow the consumer to opt out by mailing a form, calling a toll-free telephone number, or any other reasonable means within 30 days from the date you mailed the notices.

(ii) *By electronic means.* A customer opens an on-line account with you and agrees to receive the notices required in paragraph (a)(1) of this section electronically, and you allow the customer to opt out by any reasonable means within 30 days after the date that the customer acknowledges receipt of the notices in conjunction with opening the account.

(iii) *Isolated transaction with consumer.* For an isolated transaction, such as the purchase of a cashier's check by a consumer, you provide the consumer with a reasonable opportunity to opt out if you provide the notices required in paragraph (a)(1) of this section at the time of the transaction and request that the consumer decide, as a necessary part of the transaction, whether to opt out before completing the transaction.

(b) *Application of opt out to all consumers and all nonpublic personal information*—(1) You must comply with this section, regardless of whether you and the consumer have established a customer relationship.

(2) Unless you comply with this section, you may not, directly or through any affiliate, disclose any nonpublic personal information about a consumer that you have collected, regardless of whether you collected it before or after receiving the direction to opt out from the consumer.

(c) *Partial opt out.* You may allow a consumer to select certain nonpublic personal information or certain nonaffiliated third parties with respect to which the consumer wishes to opt out.

§ 573.11 Limits on redisclosure and reuse of information.

(a)(1) *Information you receive under an exception.* If you receive nonpublic personal information from a nonaffiliated financial institution under an exception in § 573.14 or 573.15 of this part, your disclosure and use of that information is limited as follows:

(i) You may disclose the information to the affiliates of the financial institution from which you received the information;

(ii) You may disclose the information to your affiliates, but your affiliates may, in turn, disclose and use the information only to the extent that you may disclose and use the information; and

(iii) You may disclose and use the information pursuant to an exception in § 573.14 or 573.15 in the ordinary course of business to carry out the activity covered by the exception under which you received the information.

(2) *Example.* If you receive a customer list from a nonaffiliated financial institution in order to provide account processing services under the exception in § 573.14(a), you may disclose that information under any exception in § 573.14 or 573.15 in the ordinary course of business in order to provide those services. For example, you could disclose the information in response to a properly authorized subpoena or to your attorneys, accountants, and auditors. You could not disclose that information to a third party for marketing purposes or use that information for your own marketing purposes.

(b)(1) *Information you receive outside of an exception.* If you receive nonpublic personal information from a nonaffiliated financial institution other than under an exception in § 573.14 or 573.15 of this part, you may disclose the information only:

(i) To the affiliates of the financial institution from which you received the information;

(ii) To your affiliates, but your affiliates may, in turn, disclose the information only to the extent that you can disclose the information; and

(iii) To any other person, if the disclosure would be lawful if made directly to that person by the financial institution from which you received the information.

(2) *Example.* If you obtain a customer list from a nonaffiliated financial institution outside of the exceptions in § 573.14 and 573.15:

(i) You may use that list for your own purposes; and

(ii) You may disclose that list to another nonaffiliated third party only if the financial institution from which you purchased the list could have lawfully disclosed the list to that third party. That is, you may disclose the list in accordance with the privacy policy of the financial institution from which you received the list, as limited by the opt out direction of each consumer whose nonpublic personal information you intend to disclose, and you may disclose the list in accordance with an exception in § 573.14 or 573.15, such as to your attorneys or accountants.

(c) *Information you disclose under an exception.* If you disclose nonpublic personal information to a nonaffiliated third party under an exception in § 573.14 or 573.15 of this part, the third party may disclose and use that information only as follows:

(1) The third party may disclose the information to your affiliates;

(2) The third party may disclose the information to its affiliates, but its affiliates may, in turn, disclose and use the information only to the extent that the third party may disclose and use the information; and

(3) The third party may disclose and use the information pursuant to an exception in § 573.14 or 573.15 in the ordinary course of business to carry out the activity covered by the exception under which it received the information.

(d) *Information you disclose outside of an exception.* If you disclose nonpublic personal information to a nonaffiliated third party other than under an exception in § 573.14 or 573.15 of this part, the third party may disclose the information only:

(1) To your affiliates;

(2) To its affiliates, but its affiliates, in turn, may disclose the information only to the extent the third party can disclose the information; and

(3) To any other person, if the disclosure would be lawful if you made it directly to that person.

§ 573.12 Limits on sharing account number information for marketing purposes.

(a) *General prohibition on disclosure of account numbers.* You must not, directly or through an affiliate, disclose, other than to a consumer reporting agency, an account number or similar form of access number or access code for a consumer's credit card account, deposit account, or transaction account to any nonaffiliated third party for use in telemarketing, direct mail marketing, or other marketing through electronic mail to the consumer.

(b) *Exceptions.* Paragraph (a) of this section does not apply if you disclose an account number or similar form of access number or access code:

(1) To your agent or service provider solely in order to perform marketing for your own products or services, as long as the agent or service provider is not authorized to directly initiate charges to the account; or

(2) To a participant in a private label credit card program or an affinity or similar program where the participants in the program are identified to the customer when the customer enters into the program.

(c) *Examples*—(1) *Account number.* An account number, or similar form of access number or access code, does not include a number or code in an encrypted form, as long as you do not provide the recipient with a means to decode the number or code.

(2) *Transaction account.* A transaction account is an account other than a deposit account or a credit card account. A transaction account does not include an account to which third parties cannot initiate charges.

Subpart C—Exceptions

§ 573.13 Exception to opt out requirements for service providers and joint marketing.

(a) *General rule.* (1) The opt out requirements in §§ 573.7 and 573.10 do not apply when you provide nonpublic personal information to a nonaffiliated third party to perform services for you or functions on your behalf, if you:

(i) Provide the initial notice in accordance with § 573.4; and

(ii) Enter into a contractual agreement with the third party that prohibits the third party from disclosing or using the information other than to carry out the purposes for which you disclosed the information, including use under an exception in § 573.14 or 573.15 in the ordinary course of business to carry out those purposes.

(2) *Example.* If you disclose nonpublic personal information under this section to a financial institution with which you perform joint marketing, your contractual agreement with that institution meets the requirements of paragraph (a)(1)(ii) of this section if it prohibits the institution from disclosing or using the nonpublic personal information except as necessary to carry out the joint marketing or under an exception in § 573.14 or 573.15 in the ordinary course of business to carry out that joint marketing.

(b) *Service may include joint marketing.* The services a nonaffiliated third party performs for you under paragraph (a) of this section may include marketing of your own products or services or marketing of financial products or services offered pursuant to joint agreements between you and one or more financial institutions.

(c) *Definition of joint agreement.* For purposes of this section, *joint agreement* means a written contract pursuant to which you and one or more financial institutions jointly offer, endorse, or sponsor a financial product or service.

§ 573.14 Exceptions to notice and opt out requirements for processing and servicing transactions.

(a) *Exceptions for processing transactions at consumer's request.* The requirements for initial notice in § 573.4(a)(2), for the opt out in §§ 573.7 and 573.10, and for service providers and joint marketing in § 573.13 do not apply if you disclose nonpublic personal information as necessary to effect, administer, or enforce a transaction that a consumer requests or authorizes, or in connection with:

(1) Servicing or processing a financial product or service that a consumer requests or authorizes;

(2) Maintaining or servicing the consumer's account with you, or with another entity as part of a private label credit card program or other extension of credit on behalf of such entity; or

(3) A proposed or actual securitization, secondary market sale (including sales of servicing rights), or similar transaction related to a transaction of the consumer.

(b) *Necessary to effect, administer, or enforce a transaction* means that the disclosure is:

(1) Required, or is one of the lawful or appropriate methods, to enforce your rights or the rights of other persons engaged in carrying out the financial transaction or providing the product or service; or

(2) Required, or is a usual, appropriate or acceptable method:

(i) To carry out the transaction or the product or service business of which the transaction is a part, and record, service, or maintain the consumer's account in the ordinary course of providing the financial service or financial product;

(ii) To administer or service benefits or claims relating to the transaction or the product or service business of which it is a part;

(iii) To provide a confirmation, statement, or other record of the transaction, or information on the status or value of the financial service or financial product to the consumer or the consumer's agent or broker;

(iv) To accrue or recognize incentives or bonuses associated with the transaction that are provided by you or any other party;

(v) To underwrite insurance at the consumer's request or for reinsurance purposes, or for any of the following purposes as they relate to a consumer's insurance: account administration, reporting, investigating, or preventing fraud or material misrepresentation, processing premium payments, processing insurance claims, administering insurance benefits (including utilization review activities), participating in research projects, or as otherwise required or specifically permitted by Federal or State law;

(vi) In connection with:

(A) The authorization, settlement, billing, processing, clearing, transferring, reconciling or collection of amounts charged, debited, or otherwise paid using a debit, credit, or other payment card, check, or account number, or by other payment means;

(B) The transfer of receivables, accounts, or interests therein; or

(C) The audit of debit, credit, or other payment information.

§ 573.15 Other exceptions to notice and opt out requirements.

(a) *Exceptions to opt out requirements.* The requirements for initial notice in § 573.4(a)(2), for the opt out in §§ 573.7 and 573.10, and for service providers and joint marketing in § 573.13 do not apply when you disclose nonpublic personal information:

(1) With the consent or at the direction of the consumer, provided that the consumer has not revoked the consent or direction;

(2)(i) To protect the confidentiality or security of your records pertaining to the consumer, service, product, or transaction;

(ii) To protect against or prevent actual or potential fraud, unauthorized transactions, claims, or other liability;

(iii) For required institutional risk control or for resolving consumer disputes or inquiries;

(iv) To persons holding a legal or beneficial interest relating to the consumer; or

(v) To persons acting in a fiduciary or representative capacity on behalf of the consumer;

(3) To provide information to insurance rate advisory organizations, guaranty funds or agencies, agencies that are rating you, persons that are assessing your compliance with industry standards, and your attorneys, accountants, and auditors;

(4) To the extent specifically permitted or required under other provisions of law and in accordance with the Right to Financial Privacy Act of 1978 (12 U.S.C. 3401 *et seq.*), to law enforcement agencies (including a federal functional regulator, the Secretary of the Treasury, with respect to 31 U.S.C. Chapter 53, Subchapter II (Records and Reports on Monetary Instruments and Transactions) and 12 U.S.C. Chapter 21 (Financial Recordkeeping), a State insurance authority, with respect to any person domiciled in that insurance authority's State that is engaged in providing insurance, and the Federal Trade Commission), self-regulatory organizations, or for an investigation on a matter related to public safety;

(5)(i) To a consumer reporting agency in accordance with the Fair Credit Reporting Act (15 U.S.C. 1681 *et seq.*), or

(ii) From a consumer report reported by a consumer reporting agency;

(6) In connection with a proposed or actual sale, merger, transfer, or exchange of all or a portion of a business or operating unit if the disclosure of nonpublic personal information concerns solely consumers of such business or unit; or

(7)(i) To comply with Federal, State, or local laws, rules and other applicable legal requirements;

(ii) To comply with a properly authorized civil, criminal, or regulatory investigation, or subpoena or summons by Federal, State, or local authorities; or

(iii) To respond to judicial process or government regulatory authorities having jurisdiction over you for examination, compliance, or other purposes as authorized by law.

(b) *Examples of consent and revocation of consent.* (1) A consumer may specifically consent to your disclosure to a nonaffiliated insurance company of the fact that the consumer has applied to you for a mortgage so that the insurance company can offer homeowner's insurance to the consumer.

(2) A consumer may revoke consent by subsequently exercising the right to opt out of future disclosures of nonpublic personal information as permitted under § 573.7(f).

Subpart D—Relation to Other Laws; Effective Date

§ 573.16 Protection of Fair Credit Reporting Act.

Nothing in this part shall be construed to modify, limit, or supersede the operation of the Fair Credit Reporting Act (15 U.S.C. 1681 *et seq.*), and no inference shall be drawn on the basis of the provisions of this part regarding whether information is transaction or experience information under section 603 of that Act.

§ 573.17 Relation to State laws.

(a) *In general.* This part shall not be construed as superseding, altering, or affecting any statute, regulation, order, or interpretation in effect in any State, except to the extent that such State statute, regulation, order, or interpretation is inconsistent with the provisions of this part, and then only to the extent of the inconsistency.

(b) *Greater protection under State law.* For purposes of this section, a State statute, regulation, order, or interpretation is not inconsistent with the provisions of this part if the protection such statute, regulation, order, or interpretation affords any consumer is greater than the protection provided under this part, as determined by the Federal Trade Commission, after consultation with the OTS, on the Federal Trade Commission's own motion, or upon the petition of any interested party.

§ 573.18 Effective date; transition rule.

(a) *Effective date.* This part is effective November 13, 2000. In order to provide sufficient time for you to establish policies and systems to comply with the requirements of this part, the OTS has extended the time for compliance with this part until July 1, 2001.

(b)(1) *Notice requirement for consumers who are your customers on the compliance date.* By July 1, 2001, you must have provided an initial notice, as required by § 573.4, to consumers who are your customers on July 1, 2001.

(2) *Example.* You provide an initial notice to consumers who are your customers on July 1, 2001, if, by that date, you have established a system for providing an initial notice to all new customers and have mailed the initial notice to all your existing customers.

(c) *Two-year grandfathering of service agreements.* Until July 1, 2002, a contract that you have entered into with a nonaffiliated third party to perform services for you or functions on your behalf satisfies the provisions of § 573.13(a)(1)(ii) of this part, even if the contract does not include a requirement that the third party maintain the confidentiality of nonpublic personal information, as long as you entered into the contract on or before July 1, 2000.

Appendix A to Part 573—Sample Clauses

Financial institutions, including a group of financial holding company affiliates that use a common privacy notice, may use the following sample clauses, if the clause is accurate for each institution that uses the notice. (Note that disclosure of certain information, such as assets, income, and information from a consumer reporting agency, may give rise to obligations under the Fair Credit Reporting Act, such as a requirement to permit a consumer to opt out of disclosures to affiliates or designation as a consumer reporting agency if disclosures are made to nonaffiliated third parties.)

A–1—Categories of information you collect (all institutions)

You may use this clause, as applicable, to meet the requirement of § 573.6(a)(1) to describe the categories of nonpublic personal information you collect.

Sample Clause A–1:

We collect nonpublic personal information about you from the following sources:

- Information we receive from you on applications or other forms;
- Information about your transactions with us, our affiliates, or others; and
- Information we receive from a consumer reporting agency.

A–2—Categories of information you disclose (institutions that disclose outside of the exceptions)

You may use one of these clauses, as applicable, to meet the requirement of § 573.6(a)(2) to describe the categories of nonpublic personal information you disclose. You may use these clauses if you disclose nonpublic personal information other than as permitted by the exceptions in §§ 573.13, 573.14, and 573.15.

Sample Clause A–2, Alternative 1:

We may disclose the following kinds of nonpublic personal information about you:

- Information we receive from you on applications or other forms, such as [*provide illustrative examples, such as "your name,*

address, social security number, assets, and income''];

• Information about your transactions with us, our affiliates, or others, such as [*provide illustrative examples, such as ''your account balance, payment history, parties to transactions, and credit card usage''*]; and

• Information we receive from a consumer reporting agency, such as [*provide illustrative examples, such as ''your creditworthiness and credit history''*].

Sample Clause A–2, Alternative 2:

We may disclose all of the information that we collect, as described [*describe location in the notice, such as ''above'' or ''below''*].

A–3—Categories of information you disclose and parties to whom you disclose (institutions that do not disclose outside of the exceptions)

You may use this clause, as applicable, to meet the requirements of §§ 573.6(a)(2), (3), and (4) to describe the categories of nonpublic personal information about customers and former customers that you disclose and the categories of affiliates and nonaffiliated third parties to whom you disclose. You may use this clause if you do not disclose nonpublic personal information to any party, other than as permitted by the exceptions in §§ 573.14, and 573.15.

Sample Clause A–3:

We do not disclose any nonpublic personal information about our customers or former customers to anyone, except as permitted by law.

A–4—Categories of parties to whom you disclose (institutions that disclose outside of the exceptions)

You may use this clause, as applicable, to meet the requirement of § 573.6(a)(3) to describe the categories of affiliates and nonaffiliated third parties to whom you disclose nonpublic personal information. You may use this clause if you disclose nonpublic personal information other than as permitted by the exceptions in §§ 573.13, 573.14, and 573.15, as well as when permitted by the exceptions in §§ 573.14, and 573.15.

Sample Clause A–4:

We may disclose nonpublic personal information about you to the following types of third parties:

• Financial service providers, such as [*provide illustrative examples, such as ''mortgage bankers, securities broker-dealers, and insurance agents''*];

• Non-financial companies, such as [*provide illustrative examples, such as ''retailers, direct marketers, airlines, and publishers''*]; and

• Others, such as [*provide illustrative examples, such as ''non-profit organizations;''*].

We may also disclose nonpublic personal information about you to nonaffiliated third parties as permitted by law.

A–5—Service provider/joint marketing exception

You may use one of these clauses, as applicable, to meet the requirements of § 573.6(a)(5) related to the exception for service providers and joint marketers in § 573.13. If you disclose nonpublic personal information under this exception, you must describe the categories of nonpublic personal information you disclose and the categories of third parties with whom you have contracted.

Sample Clause A–5, Alternative 1:

We may disclose the following information to companies that perform marketing services on our behalf or to other financial institutions with whom we have joint marketing agreements:

• Information we receive from you on applications or other forms, such as [*provide illustrative examples, such as ''your name, address, social security number, assets, and income''*];

• Information about your transactions with us, our affiliates, or others, such as [*provide illustrative examples, such as ''your account balance, payment history, parties to transactions, and credit card usage''*]; and

• Information we receive from a consumer reporting agency, such as [*provide illustrative examples, such as ''your creditworthiness and credit history''*].

Sample Clause A–5, Alternative 2:

We may disclose all of the information we collect, as described [*describe location in the notice, such as ''above'' or ''below''*] to companies that perform marketing services on our behalf or to other financial institutions with whom we have joint marketing agreements.

A–6—Explanation of opt out right (institutions that disclose outside of the exceptions)

You may use this clause, as applicable, to meet the requirement of § 573.6(a)(6) to provide an explanation of the consumer's right to opt out of the disclosure of nonpublic personal information to nonaffiliated third parties, including the method(s) by which the consumer may exercise that right. You may use this clause if you disclose nonpublic personal information other than as permitted by the exceptions in §§ 573.13, 573.14, and 573.15.

Sample Clause A–6:

If you prefer that we not disclose nonpublic personal information about you to nonaffiliated third parties, you may opt out of those disclosures, that is, you may direct us not to make those disclosures (other than disclosures permitted by law). If you wish to opt out of disclosures to nonaffiliated third parties, you may [*describe a reasonable means of opting out, such as ''call the following toll-free number: (insert number)''*].

A–7—Confidentiality and security (all institutions)

You may use this clause, as applicable, to meet the requirement of § 573.6(a)(8) to describe your policies and practices with respect to protecting the confidentiality and security of nonpublic personal information.

Sample Clause A–7:

We restrict access to nonpublic personal information about you to [*provide an appropriate description, such as ''those employees who need to know that information to provide products or services to you''*]. We maintain physical, electronic, and procedural safeguards that comply with federal standards to guard your nonpublic personal information.

Dated: May 10, 2000.

By the Office of Thrift Supervision.

Ellen Seidman,

Director.

[FR Doc. 00–13124 Filed 5–31–00; 8:45 am]

BILLING CODE 4810–33–P; 6210–01–P; 6714–01–P; 6720–01–P

Federal Register

Thursday,
June 1, 2000

Part III

Department of Education

Upward Bound Program Participant Expansion Initiative; Notice

DEPARTMENT OF EDUCATION

Upward Bound Program Participant Expansion Initiative

AGENCY: Office of Postsecondary Education, Department of Education.

ACTION: Notice of proposed priority.

SUMMARY: The Secretary of Education proposes to establish an absolute priority to provide supplemental funds of up to $85,600 in fiscal year 2000 to on-going Upward Bound projects that serve at least one target high school in which at least 50 percent of the students were eligible for a free lunch under the National School Lunch Act during the 1999–2000 school year.

The purpose of this initiative is to increase the number of the neediest eligible students who are served by the Upward Bound program. The neediest students are generally those from the lowest income levels. The Secretary believes that limiting supplemental funds to projects that serve the above-described target schools is a good way to measure whether projects serve the lowest income students because the Free Lunch program is limited to students from families with the lowest family income.

Under this priority, supplements up to $85,600 will be awarded to projects currently funded under the Upward Bound Program. An estimated 150 current Upward Bound projects could receive supplemental funds to serve not more than twenty (20) additional students.

Projects that receive supplemental funds under this priority are strongly encouraged to select eligible participants who have the greatest need for Upward Bound services.

DATES: We must receive your comments on or before July 3, 2000.

ADDRESSES: Address all comments about this proposed priority to Dr. Robert L. Belle, U.S. Department of Education, 1990 K Street, NW., Room 7044, Washington, DC 20006–8510. If you prefer to send your comments through the Internet, use the following address: peggy_whitehead@ed.gov.

FOR FURTHER INFORMATION CONTACT: Peggy Whitehead, Sheryl Wilson, or Gaby Watts, U.S. Department of Education, 1990 K Street, NW., Room 7020, Washington, DC 20006–8510. Telephone (202) 502–7600. If you use a telecommunications device for the deaf (TDD), you may call the Federal Information Relay Service (FIRS) at 1–800–877–8339. Individuals with disabilities may obtain this document in an alternative format (*e.g.*, Braille, large print, audiotape, or computer diskette) on request to the contact persons listed in the preceding paragraph.

SUPPLEMENTARY INFORMATION:

Invitation to Comment

We invite you to submit comments regarding this proposed priority. During and after the comment period, you may inspect all public comments about this priority in room 7039, 1990 K Street, NW., Washington, DC, between the hours of 8:30 a.m. and 4:00 p.m. Eastern time, Monday through Friday of each week except Federal holidays.

Assistance to Individuals With Disabilities in Reviewing the Rulemaking Record

On request, we will supply an appropriate aid, such as a reader or print magnifier, to an individual with a disability who needs assistance to review the comments or other documents in the public rulemaking record for this proposed priority. If you want to schedule an appointment for this type of aid, you may call (202) 502–7600. If you use a TDD, you may call the Federal Information Relay Service (FIRS) at 1–800–877–8339.

Background

In fiscal year 2000, the Congress provided more funds than the Administration requested for the Federal TRIO Programs. In examining the options available to the Secretary for allocating these additional funds, the Secretary determined that a portion of the funds should be used to increase support to the Upward Bound program. The Upward Bound program, authorized under section 402C of the Higher Education Act of 1965 as amended (HEA), 20 U.S.C. 1070a–13, serves low-income, potential first-generation, college students helping them generate the skills and motivation necessary for success in education beyond secondary school.

Proposed Absolute Priority

Under 34 CFR 75.105(c), the Secretary proposes to give an absolute preference to applications that meet the following absolute priority. The Secretary will provide supplemental funds of $85,600 only to Upward Bound projects serving a target high school in which at least 50 percent of the students were eligible for the Free Lunch program during the 1999–2000 school year.

If more applications are received than can be funded under this initiative, the Secretary will use numerical scores assigned by field readers during the fiscal year 1999 Upward Bound competition. The Secretary will provide supplemental funds to the projects eligible for the proposed absolute priority that received the highest average scores from the three field readers. For the purposes of this proposed absolute priority, the prior experience score will not be considered. Only currently funded projects are eligible to apply for these supplemental funds.

Veteran Upward Bound projects and Upward Bound Math/Science projects *are not* eligible to participate in this initiative.

Upward Bound projects that wish to receive supplemental funds will be required to submit:

- For the 1999–2000 school year, the number of students eligible for the Free Lunch program at each of the target high schools served by the project and the total number of students enrolled at those target schools;
- The number of additional students, not to exceed 20, that the project plans to serve;
- A revised budget; and
- A narrative describing how the supplemental funds will be used.

Invitational Priority

The Secretary strongly encourages projects that receive supplemental funds to enhance their recruitment strategies and services to target high schools to select and serve students who are at greatest risk of not graduating from high school or pursuing postsecondary education. As is the case currently in the Upward Bound program, program participants must be low-income or potential first-generation college students who have an academic need for the services of this program. However, under 34 CFR 75.105(c)(1) an application that meets this invitational priority does not receive competitive or absolute preference over other applications.

Intergovernmental Review

This program is subject to Executive Order 12372 and the regulations in 34 CFR part 79. One of the objectives of the Executive order is to foster an intergovernmental partnership and a strengthened federalism. The Executive order relies on processes developed by State and local governments for coordination and review of proposed Federal financial assistance.

This document provides early notification of our specific plans and action for the program.

Applicable Program Regulations: 34 CFR Part 645.

Program Authority: 20 U.S.C. 1070.

Electronic Access to This Document

You may view this document, as well as all other Department of Education

documents published in the **Federal Register**, in text or Adobe Portable Document Format (PDP) on the Internet at either of the following sites:

http://ocfo.ed.gov/fedreg.htm
http://www.ed.gov/news.html

To use the PDF you must have the Adobe Acrobat Reader which is available free at either of the previous sites. If you have questions about using the PDF, call the U.S. Government Printing Office (GPO), toll free, at 1–888–293–6498; or in the Washington, DC area at (202) 512–1530.

Note: The official version of this document is the document published in the **Federal Register**. Free Internet access to the official edition of the **Federal Register** and the code of Federal Regulations is available on GPO Access at: http://www.access.gpo.gov/nara/index.html

Dated: May 26, 2000.

A. Lee Fritschler,

Assistant Secretary, Office of Postsecondary Education.

[FR Doc. 00–13662 Filed 5–31–00; 8:45 am]

BILLING CODE 4000–01–P

Federal Register

Thursday,
June 1, 2000

Part IV

Department of the Interior

Fish and Wildlife Service

Department of Commerce

National Oceanic and Atmospheric Administration

Availability of a Final Addendum to the Handbook for Habitat Conservation Planning and Incidental Take Permitting Process; Notice

DEPARTMENT OF THE INTERIOR

Fish and Wildlife Service

DEPARTMENT OF COMMERCE

National Oceanic and Atmospheric Administration

[Docket No. 981208299–0049–02]

RIN:1018–AG06, 0648–XA14

Notice of Availability of a Final Addendum to the Handbook for Habitat Conservation Planning and Incidental Take Permitting Process

AGENCIES: Fish and Wildlife Service, Interior, and National Marine Fisheries Service, National Oceanic and Atmospheric Administration, Commerce.

ACTION: Notice of final policy.

SUMMARY: The Fish and Wildlife Service and the National Marine Fisheries Service (the Services) are publishing a final addendum to the Handbook for Habitat Conservation Planning and Incidental Take Permitting Process (HCP Handbook). This addendum, which is also known as the five-point policy guidance, is printed entirely within this notice. Like the HCP Handbook, the addendum provides clarifying guidance for the Services in conducting the incidental take permit program and for those applying for an incidental take permit under section 10(a)(1)(B) of the Endangered Species Act (ESA). This guidance will promote efficiency and nationwide consistency within and between the Services and improve the Habitat Conservation Planning program.

DATES: This policy is effective July 3, 2000.

ADDRESSES: Chief, Division of Endangered Species, U.S. Fish and Wildlife Service, 4401 North Fairfax Drive, Room 420, Arlington, Virginia 22203 (facsimile 703/358–1735); or Chief, Endangered Species Division, Office of Protected Resources, National Marine Fisheries Service, 1315 East-West Highway, Silver Spring, Maryland 20910 (facsimile 301/713–0376).

FOR FURTHER INFORMATION CONTACT: Nancy Gloman, Chief, Division of Endangered Species, U.S. Fish and Wildlife Service (telephone 703/358–2171, facsimile 703/358–1735), or Wanda Cain, Chief, Endangered Species Division, National Marine Fisheries Service (telephone 301/713–1401, facsimile 301/713–0376) at the above addresses.

SUPPLEMENTARY INFORMATION:

Background

The Endangered Species Act (ESA) was amended in 1982 to allow the Secretaries to authorize the taking of listed species incidentally to an otherwise lawful activity by non-Federal entities such as states, counties, local governments, and private landowners (section 10(a)(1)(B)). To receive a permit, the applicant submits a conservation plan (also referred to as an HCP) that meets the criteria included in the ESA and its implementing regulations (50 CFR parts 17 and 222).

The section 10 incidental take permitting process (or HCP process) provides additional flexibility for landowners by including planning for unlisted species, which enables the process to embrace an ecosystem and landscape-level approach. This proactive approach can reduce future conflicts and may even preclude listing of species, furthering the purposes of the ESA. As the Services have made many refinements to the process, we have also experienced tremendous growth in the demand for Habitat Conservation Plans (HCPs) in recent years. In 1992, 14 HCPs had been approved. As of today, we have more than 260 HCP permits covering more than twenty million acres of land, providing conservation for approximately 200 listed species. More than 200 HCPs are under some stage of development. The HCP process provides an opportunity to develop strong partnerships with local governments and the private sector.

Based on the Services' experience in developing HCPs and lessons learned since 1983, the Services developed comprehensive guidance on conducting the incidental take permit program. This guidance was developed into the HCP Handbook, which was made available for public review and comment on December 21, 1994 (59 FR 65782). It was issued in final form on December 2, 1996 (61 FR 63854).

With the 1982 amendments, Congress envisioned and allowed the Federal government to provide regulatory assurances to non-Federal property owners through the section 10 incidental take permit process. We decided that a clearer policy associated with the permit regulations in 50 CFR 17.22, 17.32, and 222.307 regarding the assurances provided to landowners entering into an HCP was needed. This prompted us to develop the ''No Surprises'' policy, which was based on the 1982 Congressional Report language and a decade of working with private landowners during the development and implementation of HCPs. The Services believed that non-Federal property owners should be provided economic and regulatory certainty regarding the overall cost of species conservation and mitigation, provided that the affected species were adequately covered, and the permittee was properly implementing the HCP and complying with the terms and conditions of the HCP, permit, and Implementing Agreement (IA), if used. The Services codified the ''No Surprises'' policy into a final rule, 50 CFR 17.22(b)(5), 17.32(b)(5) and 222.307(g), on February 23, 1998 (63 FR 8859). It was at this time that the Services announced our intent to revise the HCP Handbook, both to reflect the final No Surprises rule and to further enhance the effectiveness of the HCP process in general through expanded use of five concepts, including permit duration, public participation, adaptive management, monitoring provisions, and biological goals.

On March 9, 1999, the Services published the draft five-point policy (64 FR 11485) for public review and comment. This notice establishes the five-point policy as a final addendum to the HCP Handbook. The addendum supplements the HCP Handbook and No Surprises final rule and will be applied within the context of the existing statute and regulations. This final addendum is considered agency policy, and the Services are fully committed to its implementation. The concepts and definitions of terms used in the addendum are found in the ESA, implementing regulations, and HCP Handbook. Further information about HCPs may be obtained from the FWS webpage at http://www.fws.gov/r9endspp/hcp/hcp.html.

Summary of Comments Received

The Services received more than 200 letters of comment on the draft addendum from individuals, conservation groups, trade associations, local governments, Federal and State agencies, businesses and corporations, and private organizations. Because most of these letters included similar comments (many were form letters) we grouped the comments according to issues. We further divided these issues into two sets. The issues in the first set deal with the policy as a whole and HCPs in general. The issues in the second set pertain to the individual sections of the policy and are organized accordingly. The following is a summary of the relevant comments and the Services' responses.

General Five-Point Policy or HCP Issues

Issue 1: Many commenters were concerned that the policy would not be complied with unless it was regulatory in nature and, therefore, suggested codifying the policy into regulation rather than issuing the addendum as policy.

Response 1: We believe that publishing the addendum as policy at this time is appropriate, because, like the HCP Handbook itself, the addendum provides specific guidance for implementation of the statute and regulations. The intent of the addendum is to clarify the concepts identified in existing policy and regulations and ensure consistency in their use. The Services will follow the guidance in the HCP Handbook including this addendum.

Issue 2: Many commenters stated that HCPs should incorporate recovery goals. The comments were primarily referring to the biological goals of the HCP, but also requested the incorporation of recovery goals into adaptive management and monitoring. Other comments included the suggestion of minimum scientific standards for the five points addressed in the addendum or for HCPs in general. Conversely, one commenter stated that biological goals and objectives should simply be that the HCP ''not appreciably reduce the likelihood of survival and recovery,'' which is one of the statutory criteria for permit issuance. Other suggested methods of incorporating recovery into HCPs include developing an overall strategy of recovery that includes HCPs, or tying adaptive management back into the recovery goals of a species.

Response 2: The HCP program standards are contained within the statutory and regulatory criteria. Two of the statutory criteria for obtaining an incidental take permit are that the proposed activity, along with the HCP, does not appreciably reduce the likelihood of survival and recovery of the species, and that the HCP minimizes and mitigates the impact of the taking to the maximum extent practicable. The Services believe that guidance is necessary for identifying biological goals and objectives that translate these statutory and regulatory criteria or standards into meaningful biological measures, specific to a particular HCP situation and in a manner that will facilitate monitoring.

The Services also agree that the biological goals and objectives should be consistent with recovery but in a manner that is commensurate with the scope of the HCP. Under section 10 of the ESA, we do not explicitly require an HCP to recover listed species or contribute to the recovery objectives outlined in a recovery plan, but do not intend to permit activities that preclude recovery. This approach reflects the intent of the section 10(a)(1)(B) incidental take permit process to provide for authorization of incidental take, not to mandate recovery. However, the extent to which an HCP may contribute to recovery is an important consideration in any HCP effort, and applicants should be encouraged to develop HCPs that produce a net positive effect on a species. The Services can use recovery goals to frame the biological goals and objectives. Recovery plans are also used as sources for possible minimization and mitigation measures for the HCP.

If a recovery plan is not available, we must rely upon other available sources of biological information to encourage the development of HCPs that would aid in a species' recovery. If a recovery plan is available, the Services and applicants should refer to it for information on uncertainty associated with the species' biology and/or its conservation in order to determine if an adaptive management strategy is necessary.

By defining what adaptive management means for HCPs in the addendum, we established a standard for its use. An adaptive management strategy is used to address significant uncertainty associated with a particular HCP, but it is not practicable (or possible) to require that all adaptive management strategies impose an elaborate experimental design. However, an adaptive management strategy must be tied to the biological goals and objectives of the HCP and based on the best scientific information available. We may also obtain strategies to deal with the uncertainty from recovery plans that can be incorporated into an HCP's adaptive management program.

Similarly, a monitoring program's standard for HCPs is based on the best scientific information available, but an HCP's monitoring program also is scaled to the particular HCP. The Services should be aware of the types of monitoring programs that are ongoing in order to coordinate efforts between HCPs. It may be more economical for smaller HCPs to participate in larger monitoring programs by contributing to or incorporating those programs.

Issue 3: Many comments referred to the No Surprises policy, requesting either an increase or decrease in the amount of assurances associated with incidental take permits.

Response 3: The Services published the final rule on the No Surprises policy on February 23, 1998 (63 FR 8859). The final rule codified into 50 CFR parts 17 and 222 the nature of the assurances provided to incidental take permittees. All permits issued after March 25, 1998, under section 10(a)(1)(B) of the ESA receive No Surprises assurances as specified in 50 CFR 17.22(b)(5), 17.32(b)(5), 222.307(g), and 222.307(h). This policy addendum does not alter the assurances provided to permittees by regulation.

The No Surprises assurances apply only to incidental take permits issued in accordance with the requirements of the Services' regulations where the HCP is properly implemented. The assurances extend only to those species adequately covered by the HCP. The term ''No Surprises'' refers to regulatory assurances, *not* biological assurances, and applies only to the extent of mitigation required by the incidental take permit in response to unforeseen circumstances or changed circumstances not provided for in the HCP. Specifically, permittees, who are properly implementing their HCP, will not be required to provide additional conservation and mitigation measures involving the commitment of additional land, water or financial compensation or additional restrictions on the use of land, water, or other natural resources without their consent.

The No Surprises assurances encourage contingency planning. Changes in circumstances that can be reasonably anticipated during the implementation of an HCP can be planned for in the HCP. Such HCPs should describe the modifications in the project or activity that will be implemented if these circumstances occur. Precisely because nature is so dynamic, planning for changed circumstances and adopting adaptive management strategies within the HCP, permit, or IA, if used, will better serve both the needs of permittees and endangered species conservation.

Issue 4: Based largely on a study on HCPs supported by the American Institute of Biological Sciences and National Center for Ecological Analysis and Synthesis, several commenters raised questions about biological uncertainty in decisions to issue incidental take permits. Some commenters requested a moratorium on issuing 10(a)(1)(B) incidental take permits, stating that there is not enough known about the species to lock in long-term conservation actions provided by HCPs and the assurances given with these permits. One commenter specifically stated that incidental take permits should not be issued if there is any uncertainty. Instead, efforts should

be spent on filling those data gaps before issuing permits.

Response 4: The Services believe that covered species, both listed and unlisted, will be afforded more protection because of the conservation measures gained through the HCP process. Permitting incidental take that includes carefully constructed conservation actions will benefit most covered species. Part of the careful construction of an HCP is incorporation of contingency plans, whether it is through planning for changed circumstances or developing and implementing an adaptive management strategy.

A moratorium on incidental take permits would not serve species or the public well and would not be in accordance with the ESA. Section 10(a)(2)(B) of the ESA states that an incidental take permit that meets the issuance criteria shall be issued. The partnerships this program encourages are needed to promote endangered and threatened species conservation on non-Federal lands.

The Services appreciate the suggestions provided in the study sponsored by the American Institute of Biological Sciences and the National Center for Ecological Analysis and Synthesis. Nevertheless, we believe, and the study confirmed, that the HCPs currently in place are based on the best available scientific and commercial information. If we lack critical information regarding the biological needs of a species proposed to be covered under an HCP, we will not issue the permit until such information is obtained or an acceptable adaptive management strategy is incorporated into the HCP to address the uncertainty.

Issue 5: Some comments stated that the addendum should allow citizen suits to ensure that permittees are properly implementing their HCPs.

Response 5: The addendum does not in any way alter the ability of citizens to bring lawsuits using the citizen suit provision of the ESA.

Issue 6: One commenter stated that the addendum should provide for compensation for loss of Tribal resources due to implementation of HCPs.

Response 6: The Secretarial Order regarding American Indian Tribal Rights, Federal-Tribal Trust Responsibilities, and the Endangered Species Act was issued on June 5, 1997, by the Secretaries of the Interior and of Commerce pursuant to the ESA, the Federal-Tribal trust relationship, and other Federal law. This Order clarifies the responsibilities of the Services when ESA actions affect, or may affect, Indian lands, tribal trust resources, or the exercise of American Indian tribal rights. The order does not require HCP applicants to include the tribes in actual negotiations or require compensation for loss of Tribal resources.

Issue 7: One comment stated that the draft addendum did not adhere to the policy on the use of plain English in Government documents.

Response 7: The final addendum is written to incorporate the principles of plain English. However, most of the concepts within this addendum and within the HCP Program are biological or otherwise technical in nature. Therefore, we must use certain terminology that is associated with those concepts.

Issue 8: One commenter suggested that all five points addressed by the addendum should be proportional to the scale of the HCP.

Response 8: The Services agree that application of each of the 5 points (*i.e.,* the biological goals and objectives, an adaptive management strategy, the monitoring program of an HCP, the determination of the duration of an incidental take permit, and the scope of public involvement) should be commensurate with the scope of the HCP. Each individual section within the addendum discusses the relationship between each of the five points and the scope of the HCP.

Biological Goals Issues

Issue 9: There were comments about who should determine the biological goals and objectives of an HCP. One commenter suggested that the person(s) with the most experience with the species should determine the biological goals and objectives of an HCP. Additional comments suggested that we confer with State agencies in determining biological goals and objectives. Another commenter stated that the Services should provide applicants assistance in developing the biological goals and objectives.

Response 9: In addition to the applicants, the Services play an integral role in determining the biological goals and objectives. We agree that species experts should be consulted during development of an HCP, including determining the biological goals and objectives. We have revised the biological goals and objectives section to articulate the methods available for their development. Service biologists frequently confer informally with species experts or other specialty experts (*e.g.,* population modeling, habitat assessment, restoration).

The Services also agree that State agencies should be involved with HCPs, including HCPs that cover non-listed species, and we encourage applicants to include the State wildlife agencies during the development of their HCPs. The addendum reflects this commitment.

Issue 10: There were comments about whether species would benefit more from habitat-based biological goals versus goals specific to the number of individuals or populations. Some suggested that habitat-based goals would be sufficient. Others stated that there should only be species-based goals and that they should account for all life stages of that species and any natural fluctuations in population levels.

Response 10: As discussed in the draft addendum, an appropriate HCP biological goal for a species will depend upon the particular species, the nature of the impact, the nature of the conservation measures in the HCP, and to what extent the populations or other ecological factors fluctuate. The addendum states the following:

> The biological goals and objectives may be either habitat or species based. Habitat-based goals are expressed in terms of amount and/or quality of habitat to be achieved. Species-based goals are expressed in terms specific to individuals or populations of that species. Complex multispecies or regional HCPs may use combination of habitat- and species-specific goals and objectives. However, according to 50 CFR 17.22, 17.32, 222.102, and 222.307, each covered species must be addressed as if it were listed and named on the permit. Although the goals and objectives may be stated in habitat terms, each covered species that falls under that goal or objective must be accounted for individually.

The Services chose to broadly define the application of biological goals and objectives, not only in terms of whether they should be habitat-based or species-based, but also how the goals and objectives should be measured (*e.g.,* numbers, life history stages, acres). This broad definition allows for flexibility in determining appropriate biological goals and objectives. The Services and applicants must determine the appropriate unit of measure such as numbers of individuals at a particular life stage, all lifestages, or quantity or quality of habitat for each individual HCP. The Services and applicants should also consult with appropriate experts to determine those goals (see above discussion).

Regardless of the type of goal used, at some point, all HCPs must undergo a species by species analysis. If an HCP is planned on a habitat basis, a species-by-species analysis must be made to determine if the HCP adequately covers the species. The relationship of habitat goals to specific species will help the

Services and applicant determine if a species is adequately covered by an HCP. Also, this consideration of individual species provides a safety net for those species that may not neatly fit into a purely habitat-based plan. For example, populations of a narrow endemic species that occur within a wider ranging habitat type may not be adequately covered by an HCP that depends solely on amount of habitat conserved in a broad general area and does not specify particular locations where the habitat for that species is conserved.

Issue 11: Some commenters addressed quantifying take within an HCP and during its implementation. Some stated that quantifying take should not be required, and others stated that it should always be required.

Response 11: Although identifying the amount or extent of take within an HCP and the permit does not directly refer to development of biological goals and objectives, it is related and will be addressed here. Section 10(a)(2)(A) requires that an HCP specify the impact which will likely result from the take to be permitted. Both Services require applicants to include certain information about the species to be covered by an HCP. FWS permit application criteria require identification of the number, age, and sex of such species, if known (50 CFR 17.22, 17.32). NMFS application criteria require a description of the anticipated impact, including amount, extent, and type of anticipated taking (50 CFR 222.307). While evaluating an HCP, we use the amount of incidental take as a main indicator of the impact the proposed project will likely have on the species. Identifying the amount of incidental take contributes to the analysis of whether the proposed incidental take permit will appreciably reduce the likelihood of survival and recovery of the species.

There are situations where precisely quantifying the number of individuals that are anticipated to be taken is a less effective method than estimating the amount or extent of take in terms of the amount of habitat altered. What is most important is that we are able to assess the impact of the anticipated take on the species. Regardless of how the incidental take is quantified, it must be indicated in the biological opinion the Services complete for the issuance of the permit and on the permit itself.

Adaptive Management Issues

Issue 12: Many commenters raised the issue as to the correct definition, and, therefore, correct application of adaptive management. Additionally, these commenters stated that under the ''scientific definition'' of adaptive management, true adaptive management is impossible under No Surprises.

Response 12: The Services recognize the use of the term within the scientific literature. However, the phrase ''adaptive management'' is used in many other disciplines and contexts and has different meanings to different people. The scientific definition typically follows Holling (1978) and Walters (1986) (see also Walters and Holling, 1990; McLain and Lee, 1996; Walters 1997). This definition is described as a process that tackles the uncertainty in management of natural resources through experimentation. Most frequently, this involves modeling to determine a course of action for on-the-ground implementation with monitoring to test the model's predictions. Walters (1986) breaks down categories of learning through implementation as ''active'' and ''passive'' adaptive management. Passive adaptation is where information obtained is used to determine a single best course of action. Active adaptation is developing and testing a range of alternative strategies (Walters and Holling 1990). For the purposes of the HCP program, we are defining adaptive management as a method for examining alternative strategies for meeting measurable biological goals and objectives, and then, if necessary, adjusting future conservation management actions according to what is learned.

The Services are incorporating a broad perspective of adaptive management, with the key components that make an adaptive process in HCPs meaningful. These components include careful planning through identification of uncertainty, incorporating a range of alternatives, implementing a sufficient monitoring program to determine success of the alternatives, and a feedback loop from the results of the monitoring program that allows for change in the management strategies. Because the Services and applicant provide these elements up front in the HCP, they are consistent with No Surprises.

The addendum makes a distinction between adaptive management that would have a more experimental approach versus contingency planning for the implementation of measures in the event of changed circumstances where there is little uncertainty. An HCP can provide provisions for changed circumstances that does not involve adaptive management.

Issue 13: One commenter stated that all HCPs should contain adaptive management.

Response 13: As stated in the addendum, the Services will incorporate adaptive management strategies when appropriate. Adaptive management is necessary for those plans ''that would otherwise pose a significant risk to the species at the time the permit is issued due to significant data or information gaps.'' Not all HCPs warrant adaptive management, although any HCP may incorporate an adaptive management strategy if agreed upon by the applicant and the Services.

In addition, the ability for applicants and the Services to build contingency measures into an HCP's operating conservation strategy does not depend solely on the use of adaptive management. For instance, the No Surprises final rule provides for planning for changed circumstances. This planning involves providing alternative actions for possible events that may alter the ability of an HCP to meet its biological goals and objectives. An adaptive management strategy would not be necessary if there were no significant uncertainty associated with identifying appropriate responses to potential changed circumstances.

Issue 14: One commenter stated that adaptive management not only increases the complexity of an HCP (and, therefore, the time and effort involved in its development and implementation), but the uncertainty poses an economic risk to permittees.

Response 14: We agree that adaptive management may increase the complexity of an HCP. However, adaptive management strategies should be commensurate with the scope of the HCP (*e.g.*, the smaller the scope or impacts, the less complex the HCP and any adaptive management if warranted). Additionally, all HCPs must meet statutory and regulatory issuance criteria prior to approval and issuance of a permit. Adaptive management is one tool available to applicants and the Services that can be used to meet the issuance criteria. It is also a means for increasing the flexibility of an HCP. A results-oriented implementation program lets a permittee apply a number of different methods for achieving a certain goal, rather than adhering to an inflexible list of prescriptions. A results-oriented program actually provides some certainty to the permittee by establishing a framework to modify the operating conservation strategy. Results are periodically assessed, and, if shortcomings are evident, previously agreed-upon alternative strategies are implemented, thereby streamlining

additional discussions between the Services and permittee.

Setting the sideboards and structure during development of the HCP provides applicants certainty in the extent of requirements for implementing an adaptive management strategy. As stated in the No Surprises final rule, we will not require a permittee to make additional mitigation commitments, including any adaptive management provisions, beyond what was agreed to in the HCP, permit, and IA, if used.

Issue 15: One commenter stated that adaptive management should not replace good, up-front conservation measures.

Response 15: The Services agree that adaptive management should not be used in place of developing good up-front conservation measures or to postpone addressing difficult issues. However, adaptive management may be necessary to craft a framework for addressing uncertainty in the operating conservation program to ensure that the measures fulfill the biological goals and objectives of an HCP.

Monitoring Issues

Issue 16: Several commenters stated that the Services should establish minimum standards or require scientific standards for the monitoring program within an HCP.

Response 16: The implementing regulations for an HCP (50 CFR 17.22, 17.32, and 222.307) require a monitoring component. The HCP Handbook includes guidance on what the monitoring component of an HCP should look like. However, we have refined that guidance and have incorporated it into the addendum. The Services agree that any methodology and techniques involved in biological aspects of monitoring should be based on science. The addendum does state that ''The monitoring program will be based on sound science. Standard survey or other previously-established monitoring protocols should be used. Although the specific methods used to gather necessary data may differ depending on the species and habitat types, monitoring programs should use a multispecies approach when appropriate.'' Monitoring approaches that are consistent with the Handbook and addendum should be adequate for assessing whether the HCP is achieving its biological goals and objectives.

Issue 17: Some commenters stated that it was difficult to distinguish between compliance monitoring and effects and effectiveness monitoring.

Response 17: The Services recognize that it may be difficult to distinguish between the two types of monitoring particularly when the actual monitoring actions may overlap. One way to distinguish between the two types is that compliance monitoring verifies that the permittee is carrying out the terms of the HCP, permit, and IA (if one is used) while effects and effectiveness monitoring evaluates the biological effects of the permitted action and determines whether the effectiveness of the operating conservation program of the HCP is consistent with the assumptions and predictions made when the HCP was developed and approved. The permittee is primarily responsible for ensuring that their HCP is working as planned and the Services are primarily responsible for monitoring whether the permittee is complying with permit requirements.

Issue 18: A few commenters suggested that the Services identify, in the addendum, minimum qualifications for personnel conducting monitoring.

Response 18: The addendum does state that the personnel conducting the monitoring should be qualified. However, the necessary qualifications depend upon what is being monitored. Since HCPs are highly variable, the addendum is flexible about the minimum qualifications of personnel conducting the monitoring, and the Services' staff will determine whether the person or company conducting the monitoring is qualified.

Issue 19: One commenter suggested the Services require all monitoring programs to include population counts.

Response 19: Population monitoring may not be appropriate for all HCPs. The scope of any HCP monitoring program should be in proportion to the scope of that HCP. If an HCP affects only a portion of a population, the permittee should not be responsible for monitoring the entire population. In addition, it may or may not be appropriate for a particular HCP to include counting of populations or individuals. The appropriate unit of measure in a monitoring program depends upon the specific impacts and operating conservation program within an HCP and the biological goals and objectives of the HCP. The unit of measure also depends on how the species uses the habitat to be affected. However, the Services should coordinate monitoring programs to obtain a larger picture of the status of a population.

Issue 20: Some commenters suggested that self-reporting should not be used as a means to demonstrate that the permittee is in compliance with the terms of an HCP.

Response 20: We are not limited to self-reporting for compliance monitoring. However, the limited resources available to the Services to conduct monitoring necessitates our reliance on the working relationships between us and the permittees to verify compliance. As discussed in the addendum, where appropriate, we may conduct our own evaluation, including site visits. The Services should be able to use the periodic reports made by permittees as one method in determining whether the permittee is in compliance. Periodic reports may be our first source of information about the implementation of an HCP. From these reports, we may catch discrepancies that alert us to possible implementation problems. Also, the information obtained to determine effects and effectiveness may be the same information needed to determine compliance. We do not want to use limited resources on duplicative monitoring efforts.

Permit Duration Issues

Issue 21: One commenter suggested that the Services link the duration of the permit to recovery of the species covered by an HCP.

Response 21: We assume that this comment refers to linking duration of the permit to completion of recovery goals where HCPs have a ''recovery standard.'' We discuss the relationship of the HCP program and recovery in the above responses.

Issue 22: Some commenters stated that we should not place time limits on mitigation measures.

Response 22: This comment seems to reflect a misunderstanding regarding the duration of an incidental take permit. Permit duration is the length of time during which the permittee has incidental take authorization. HCPs may be designed such that mitigation measures are in effect for longer periods of time, including in perpetuity, than the time the incidental take permit is in effect.

Public Participation Issues

Issue 23: Many comments pertained to whether the Services or the applicant decides who participates in the development of HCPs. Most commenters stated that the applicant should not decide who participates, and offered alternatives including mandatory stakeholder or interested party participation, and leaving the decision up to the Services.

Response 23: The experience of the Services shows that the more public participation in the development phase of an HCP, the more likely it will be accepted by the public. However, we maintain that the inclusion of other

interested parties in the development of an HCP is ultimately the decision of the applicant. The ESA and its implementing regulations do not mandate public participation before an applicant submits a permit application; only a public comment period after it is submitted and published in the **Federal Register**. We strongly encourage applicants to include more public participation at all stages of development.

Issue 24: Some commenters suggested that scientists should be involved in the development of HCPs. Another commenter stated that all HCPs should be subject to peer review.

Response 24: During consideration of whether to issue an incidental take permit, the Services are required to use the best available scientific and commercial information. Such data come from a variety of sources: scientific literature and peer-reviewed publications, in-house expertise, other State or Federal agencies, academia, and non-governmental organizations, to name a few. For listed species, the Services can draw upon a number of existing information sources, all of which have gone through peer and public review. ESA listing packages are used to gain further species-specific biological information, and where possible, the Services will draw upon recovery plans to identify conservation and monitoring measures and objectives for listed species. The addendum encourages applicants to use scientific advisory committees during the development and implementation of an HCP, especially large-scale ones.

The applicant's integration of a scientific advisory committee and perhaps other stakeholders improves the development and implementation of any adaptive management strategy. Advisory committees can assist the Services and applicants in identifying key components of uncertainty and determine alternative strategies for addressing that uncertainty. We also encourage the use of peer-review for an HCP. An applicant, with guidance from the Services, may seek independent scientific review of specific sections of an HCP and its operating conservation strategy to ensure the use of the best scientific information for HCP development.

Issue 25: One commenter requested that the public comment period under the National Environmental Policy Act (NEPA) for HCPs not be extended. Another comment suggested that the Services process incidental take permits with Environmental Impact Statements within nine months, and, if that deadline is not met, we would be required to issue the permit within 30 days.

Response 25: The addendum contains changes to the existing HCP public comment period but does not change any public input required by the Council on Environmental Quality regulations for implementing the procedural provisions of NEPA (40 CFR 1500–1508).

The intent of the addendum is to ensure the public has sufficient opportunity to review and provide comment on all HCPs, regardless of the public review requirements of NEPA. To accomplish this, the addendum lays out the various public review requirements for HCPs with different levels of impact. For example, low-effect HCPs, which are categorically excluded from the NEPA process, will have a minimum 30-day public review and comment period. The public review period for large, complex HCPs is 90 days, unless there is significant public involvement during development. All other HCPs (including large complex HCPs with significant public involvement) will be made available for review and comment for a minimum of 60 days.

The addendum contains target time frames for us to process an incidental take permit application. The target processing time frame for an HCP that includes an Environmental Impact Statement (EIS) is up to one year, including the 90-day comment period (or 60-days if significant public participation has occurred). However, we cannot issue a permit until we have determined that it meets the issuance criteria under section 10(a)(2)(B) of the ESA. Because of the complexity associated with an HCP that has an EIS, we need the target processing time frame of one year to determine whether to issue the permit. One method to reduce the amount of time needed to process a permit application is for an applicant to include up-front public participation during HCP development.

Required Determinations

Regulatory Planning and Review, Regulatory Flexibility Act, and Small Business Regulatory Enforcement Fairness Act

This final policy was subject to Office of Management and Budget (OMB) review under Executive Order 12866.

a. This policy will not have an annual economic effect of $100 million or adversely affect an economic sector, productivity, jobs, the environment, or other units of government. A cost-benefit and economic analysis is not required. The primary purpose of the addendum is to incorporate the 5-point policy, which was published in draft form on March 9, 1999, into the final Handbook for Habitat Conservation Planning and Incidental Take Permitting Process. This HCP Handbook addendum provides additional guidance on five concepts that, although treated only briefly in the handbook, are in widespread use in existing and developing HCPs. The main purpose of this addendum is to provide a consistent approach to these concepts for future HCPs. The five concepts addressed in this addendum include biological goals and objectives, adaptive management, monitoring, permit duration, and public participation.

The HCP program and the associated section 10 permits have been in place for approximately 17 years. The 1982 amendments to the ESA created a statutory framework for the HCP program that was built primarily around four permit application criteria and four permit issuance criteria. We promulgated regulations in 1985 in order to implement the Congressionally created HCP program. The statutory and regulatory framework for HCPs has remained unchanged since it was first put into place. The five concepts addressed in this addendum are an outgrowth of the statute and regulations. This addendum does not create these concepts, nor does it change the current regulations or general application of the concepts in practice.

In order to analyze the economic effect of this addendum, we reviewed the potential of this policy to have an effect on HCPs in three different areas: the cost of HCP development, the cost of HCP minimization and mitigation, and The cost of HCP implementation. Past and current experience with the HCP program leads us to predict that we will complete and approve approximately 35 new HCPs each year into the foreseeable future. We expect that the size and complexity of the expected 35 HCPs per year will continue to vary from the extremely small, single-species HCP to multi-species HCPs covering more than a million-acre planning area (see Table 1). Based on past and current experience, we predict that 20 of the expected 35 HCPs per year will be relatively small and simple HCPs covering one or a few listed species (of which 8 may be deemed ''low effect''). The HCPs of medium size and complexity are expected to account for another 12 of the 35 HCPs, and the remaining three HCPs are expected to be large, complex HCPs.

TABLE 1.—SIZE DISTRIBUTION OF HCPS ACCORDING TO PLANNING AREA, AS OF DECEMBER 31, 1999

[Some plans have both short-term and long-term HCPs, where the total amount of area addressed in the short-term HCP is included within the total area of the subsequent long-term HCP. Therefore, the numbers of HCPs accounted for above will not total the number of HCPs that have been issued. A few HCPs were not included in this tally because they addressed the planning areas in linear miles instead of acres.]

Size of HCPs	Number of HCPs
Less than 1 acre	44
Between 1–10 acres	64
Between 10–100 acres	56
Between 100–500 acres	37
Between 500–1,000 acres	11
Between 1,000–10,000 acres	17
Between 10,000–100,000 acres	14
Between 100,000–500,000 acres	10
Between 500,000–1,000,000 acres	4
Greater than 1,000,000 acres	2

The Effect of Additional Policy Guidance on Biological Goals and Objectives

This addendum emphasizes the benefit of explicitly articulating why the minimization and mitigation efforts in an HCP are being provided and what they are expected to accomplish. The thrust of this concept is aimed at the HCP preparation phase. We have no reason to believe it will have any effect on an HCP's minimization and mitigation or on HCP implementation. From the very beginning of the HCP program, biological goals and objectives have been incorporated into HCPs, sometimes in an explicit manner and in other cases in an implicit manner. For example, in the first HCP, which was used by Congress as a model for the 1982 amendments to the ESA, the HCP states that the ''purpose of the [HCP] is to provide for the indefinite perpetuation of the Mission Blue and Callippe Silverspot butterflies on San Bruno Mountain, as well as to conserve * * * the value * * * as a remnant ecosystem. * * * The more pervasive goal is to simultaneously provide for the perpetuation and enhancement of the grassland habitat which supports the butterflies. * * * The focus of preservation is on the grassland because this is thought * * * to be the ancestral native habitat. * * *'' [*San Bruno Mountain Area Habitat Conservation Plan,* Final 1991]. A more recent example from an HCP developed in Texas states ''the main goal of the HCP is to * * * minimize and mitigate the impacts. * * * This main goal is achieved by onsite conservation measures * * * and the acquisition and dedication of preserve lands for the warbler adjacent to an existing habitat preserve and within the same warbler recovery unit as the proposed development.'' [*Environmental Assessment and Habitat Conservation Plan, Issuance of an Endangered Species Section 10(a) Permit for the Incidental Take of the Golden-cheeked Warbler (Dendroica chrysoparia) during construction and Operation of the Approximate 24-acre Single Family Residential Development, Canyon Ridge, Phase A, Section 3, Austin, Travis County, Texas,* December, 1994].

The second issuance criterion in section 10 of the ESA requires a finding that the applicant ''will, to the maximum extent practicable, minimize and mitigate the impacts. * * *'' This criterion inherently requires a discussion of the minimization and mitigation efforts and their relationship to the project impact and the desired outcome of the HCP. We believe that the decision documents examining this criterion are of higher quality when biological goals and objectives are made explicit. This addendum is directed towards agency personnel and does not seek to alter the permit application criteria or otherwise require anything new of permit applicants. We already encourage HCP applicants to provide an explicit discussion of biological goals and objectives, but this addendum will not mandate such a discussion in the HCP. Instead, this addendum will ensure that the agency decision documents that analyze the HCP contain an explicit discussion of biological goals and objectives.

We do not expect that policy guidance requiring an explicit articulation of biological goals and objectives that already exist in some form in the HCP will require any significant additional time or effort. The incorporation of this addendum into the handbook reflects support for existing practice more than it does a new policy development. As such, and given the relative ease of explaining the goals of conservation measures, we believe that this policy will have little to no economic effect on small entities or any other entity. In addition, we have determined that providing a numerical or quantitative description of this deminimus effect is not practical and we have, therefore, provided a narrative analysis instead.

The Effect of Additional Policy Guidance on Adaptive Management

The HCP Handbook already provides policy guidance on adaptive management, and thus this addendum merely provides additional refinement. The concept of adaptive management has been both broadly and narrowly defined by the disciplines that use the concept. We are embracing a somewhat broad definition of the term as supported by the scientific literature, and one of the reasons for additional policy guidance on this concept is to explain our application of the concept of adaptive management compared to the narrower definition favored in some academic circles.

Adaptive management has been widely used in the HCP program from the very beginning. The first HCP, San Bruno Mountain, utilized the concept, stating: ''notwithstanding the considerable knowledge gained through the biological study, the Habitat Conservation Plan, in concept and in implementation, is novel and in many ways, experimental. There are many biological uncertainties which inescapably remain at the outset of such an ambitious undertaking which can only be resolved through an ongoing program of applied research designed specifically to direct Plan implementation.'' [*San Bruno Mountain Area Habitat Conservation Plan,* Final 1991, emphasis in original]. Since the San Bruno plan, many HCPs, especially the larger and more complex HCPs, have utilized adaptive management concepts in one form or another. Examples include the Washington County HCP in Utah and the Plum Creek Timber Company I–90 Corridor HCP in Washington. Arguably some of the measures in these HCPs that can be categorized as adaptive management were included in an attempt to meet regulatory requirements concerning unforeseen and changed circumstances. The section 10 regulations require that permit applicants develop procedures to address unforeseen circumstances (50 CFR 17.22(b)(1)(iii)(B), 17.32(b)(1)(iii)(B) for FWS and 50 CFR 222.307(g) for NMFS) and make the existence of these procedures a precondition to permit issuance. See 50 CFR 17.22(b)(2)(iii) and 17.32(b)(2)(iii) for FWS and 50 CFR 222.307(g) for NMFS. The No Surprises rulemaking expanded on the contingency planning aspects of the HCP program by requiring contingency planning for changed circumstances that are foreseeable [See 63 FR 8859 (February 23, 1998)]. This addendum on adaptive management does not mandate the contingency planning identified above, even if some of the procedures adopted fall under the heading of adaptive management.

The addendum states that adaptive management will be used for HCPs that are faced with significant data gaps. We believe that an HCP that fails to address

significant data gaps will not meet the issuance criteria of the ESA. It is, therefore, not the addendum itself that mandates the use of adaptive management in cases of significant data gaps, but is instead the applicant's need to overcome data gaps and still meet the permit issuance criteria established in the ESA. Current practice on the ground is to rely on adaptive management to overcome data gaps. This addendum provides policy support for this existing practice, but does not change the status quo. We, therefore, determine that the addendum's coverage of adaptive management will not effect small entities to any measurable degree.

The Effect of Additional Policy Guidance on HCP Monitoring

This addendum does not impose any new monitoring requirements. Monitoring is already required by the section 10 regulations. In the preamble to the final rule promulgating the section 10 regulations, we agreed with a commenter that the Service should monitor the implementation of a conservation plan and accordingly finalized revisions to sections 17.22(b)(1)(iii)(B), 17.22(b)(3), 17.32(b)(1)(iii)(B) and 17.32(b)(3) to require that conservation plans specify the monitoring measures to be used and to authorize imposition of necessary monitoring as a condition of each permit.'' 50 FR 39681, 39684 (September 30, 1985). NMFS also included a monitoring requirement in their section 10 regulations (50 CFR 307 (d)).

This addendum seeks to refine existing monitoring policy by organizing the types of monitoring being conducted into categories, including compliance monitoring, effect monitoring, and effectiveness monitoring. The addendum also seeks greater compatibility of monitoring data across HCPs. Neither of these policy additions is expected to have any economic impact. Current practice entails the HCP applicant and the Services working together to arrive at a monitoring program that, based on the specifics of the HCP and the species involved, is robust enough to provide the information the parties feel will be needed. This addendum does not alter current practice and instead reiterates the regulatory requirement and provides policy recognition and support for the current practice.

The Effect of Policy Guidance on Permit Duration

The section 10 regulations provide factors that the Director should consider in determining permit duration. The Handbook did not provide any treatment of the issue of permit duration. This addendum would add a short provision to the Handbook that essentially repeats verbatim the regulatory language on permit duration. Even though the addendum does not expand on the regulations' treatment of permit duration, we believe that the Handbook should provide coverage of all aspects of the program and it will thus be beneficial to include this provision in the Handbook. The policy guidance on permit duration will not affect the current approach to determining permit duration and will, therefore, not have any effect.

The Effect of Additional Policy Guidance on Public Participation

In the area of public participation, this addendum signals a departure from the current practice in the Handbook by increasing the length of the public comment period for many HCPs by thirty days. The ESA requires a minimum of a thirty day public comment period, but does not prohibit longer public comment periods. This addendum provides that ''low effect'' HCPs will, as a general matter, continue to be provided to the public for a thirty day comment period. The addendum thus does not change the current approach for low effect HCPs, which we expect will comprise eight of the predicted thirty-five new HCPs per year. The addendum indicates most other HCPs will be provided to the public for a sixty day comment period. Finally the addendum states that large, complex HCPs will need to have a ninety day public comment period unless the applicant has taken steps to involve the public earlier in the HCP process, in which case the HCP will qualify for the sixty day comment period.

This policy guidance on public participation has the potential to affect twenty-seven HCPs per year. The large, complex HCPs, predicted to account for three of the new HCPs per year, have historically been associated with extensive public notice and involvement, often through the EIS process under NEPA. This type of public involvement would qualify these HCPs for the sixty day comment period. The parallel NEPA process will typically require significant comment time periods, often matching or exceeding the time periods established by this addendum. We have also observed that the large HCPs of the past were noticed for more than the minimum thirty days required by section 10 simply because of their size and complexity and in response to requests for extensions from the public. We have, therefore, determined that this addendum will not alter the current practice with regard to the length of public comment periods and large HCPs. Based on this determination, we conclude that this policy guidance on public participation will not have an economic effect.

Of the remaining twenty-four expected HCPs per year, we expect at least four of those HCPs would have longer than the minimum public comment period because of reasonable public requests for extensions. There are, therefore, twenty HCPs per year that could potentially be effected by the policy guidance on public participation. Of these twenty HCPs, only a small number are expected to actually have all local approvals in hand and be ready to proceed before the conclusion of HCP processing, including the public comment period. Unless an HCP applicant is otherwise ready to begin project implementation, we do not believe an additional thirty days of public comment will have any economic effect. For the small number of HCPs that may be waiting for the HCP process to be completed, the economic effect of a thirty day extension to the process will depend tremendously on the scale and type of project. In addition, many projects will be able to proceed in part prior to permit issuance, providing there is no incidental take of species or a preclusion of the development of reasonable and prudent alternatives. See 16 U.S.C. 1536(d). HCP applicants will be fully aware of the addendum's public participation time lines and will, therefore, be able to factor the additional public comment period into their HCP planning early. This early recognition of the time lines may prove beneficial compared to planning on a thirty day comment period only to find near the end of that period that the Services has decided sound grounds exist for an extension. Based on this narrative analysis, we conclude that an increase in public comment periods will have a negligible economic effect.

In summary, the 5 Point HCP addendum provides recognition and policy support for existing practices in each of the five concept areas discussed above. The addendum does not change the current statutory or regulatory framework and merely provides refinements to existing policy. As a result, the addendum will not have a significant economic effect.

b. This addendum will not create inconsistencies with other agencies' actions. The addendum to the HCP Handbook does change the existing requirements for a HCP. The addendum

is intended to assist Government employees and as such may also assist the public. The only change to the HCP Handbook included in the addendum is to provide adequate time for public comment when developing HCPs.

c. This policy will not materially affect entitlements, grants, user fees, loan programs, or the rights and obligations of their recipients. The addendum to the HCP Handbook was developed solely to provide consistency to the HCP program and is intended as guidance for the Government.

d. This policy will not raise novel legal or policy issues. The addendum to the HCP Handbook was developed to provide clarification for the HCP process and does not change regulations or significantly change existing policy.

The Departments of Interior and Commerce certify that this policy will not have a significant economic effect on a substantial number of small entities as defined under the Regulatory Flexibility Act (5 U.S.C. 601 *et seq.*). There are more than 248 existing HCPs of which 106 are for small entities and 142 are for corporations or other large entities. The addendum does not change the ability of small entities to develop HCPs in the future. The Services expect small entities will have the same proportion of future HCPs.

This policy is not a major rule under 5 U.S.C. 804(2), the Small Business Regulatory Enforcement Fairness Act. This policy:

1. Does not have an annual effect on the economy of $100 million or more.

2. Will not cause a major increase in costs or prices for consumers, individual industries, Federal, State, or local government agencies, or geographic regions.

3. Does not have significant adverse effects on competition, employment, investment, productivity, innovation, or the ability of U.S.-based enterprises to compete with foreign-based enterprises. The purpose of the addendum is to provide Federal employees the guidance required for the consistent application of the Handbook for developing HCPs. The addendum will provide some simplification to the HCP Program due to clarification of processes.

Unfunded Mandates Reform Act

In accordance with the Unfunded Mandates Reform Act (2 U.S.C. 1501 *et seq.*):

a. This addendum will not ''significantly or uniquely'' affect small governments. A Small Government Agency Plan is not required. The HCP Handbook provides guidance to Federal employees involved in reviewing and approving incidental take permits that include habitat conservation plans. The HCPs and permits generally are coordinated with appropriate State and local governments to include their views on the activities covered by the permit (in many cases, the activities also require State or local government authorization). In some instances, the applicant is the local government seeking incidental take permits for activities planned and conducted within its area of jurisdiction. The addendum does not change this process by encouraging applicants to coordinate with State agencies. As with all other applications, this addendum will not have an effect on small governments.

b. This policy will not produce a Federal mandate of $100 million or greater in any year, *i.e.*, it is not a ''significant regulatory action'' under the Unfunded Mandates Reform Act. See discussion in the section titled ''Regulatory Planning and Review, Regulatory Flexibility Act, and Small Business Regulatory Enforcement Fairness Act.''

Takings Implication Assessment

In accordance with Executive Order 12630, the policy does not have significant takings implications. A takings implication assessment is not required. The addendum guides employees in the evaluation and approval of applications for incidental take permits under existing law.

Federalism Assessment

In accordance with Executive Order 13132, the policy does not have sufficient Federalism implications to warrant preparation of a Federalism assessment. This addendum does not change the relationship between the Services and applicants, nor does it alter the Services' relationship with State and local governments within the HCP Program.

Civil Justice Reform

In accordance with Executive Order 12988, the Office of the Solicitor has determined that the policy does not unduly burden the judicial system and meets the requirements of sections 3(a) and 3(b)(2) of the Order.

Paperwork Reduction Act.

This addendum does not require an information collection under the Paperwork Reduction Act. A related information collection associated with incidental take permits is covered by existing OMB approvals (#1018–0094 for FWS #0648–0230 for NMFS).

National Environmental Policy Act

The Department of the Interior has determined that the issuance of the policy is categorically excluded under the Department's National Environmental Policy Act procedures in 516 DM 2, Appendix 1.10. The National Oceanic and Atmospheric Administration (NOAA) has determined that the issuance of this guidance qualifies for a categorical exclusion as defined by the NOAA 216–6 Administrative Order, Environmental Review Procedure.

Section 7 Consultation

The Services do not need to complete a section 7 consultation on this final policy. An intra-Service consultation is completed prior to issuing incidental take permits under 10(a)(1)(B) of the Endangered Species Act associated with individual HCPs.

Authority

The authority for this action is the Endangered Species Act of 1973, as amended (16 U.S.C. 1531 *et seq.*).

Addendum to The HCP Handbook

The five sections (or five-points) of the final addendum are contained entirely within this notice. The Services will adhere to the guidance provided in the addendum. Nothing in this guidance is intended to supersede or alter any aspect of Federal law or regulation pertaining to the conservation of threatened or endangered species.

Biological Goals And Objectives

What Are an HCP's Biological Goals and Objectives?

HCPs have always been designed to achieve a biological purpose, yet they may not have specifically stated those biological goals. In the future, the Services and HCP applicants will clearly and consistently define the expected outcome, *i.e.,* biological goal(s). This rather simple concept will facilitate communication among the scientific community, the agencies, and the applicants by providing direction for the development of HCPs.

The HCP Handbook discusses identifying biological goals and objectives (Chapter 3). Since biological goals and objectives are inherent to the HCP process, HCPs have had implied biological goals and objectives, and many recent HCPs include explicit biological goals or objectives. Explicit biological goals and objectives clarify the purpose and direction of an HCP's operating conservation program. They create parameters and benchmarks for developing conservation measures,

provide the rationale behind the HCP's terms and conditions, promote an effective monitoring program, and, where appropriate, help determine the focus of an adaptive management strategy.

What Are Biological Goals and Objectives in HCPs?

In the context of HCPs, biological goals are the broad, guiding principles for the operating conservation program of the HCP. They are the rationale behind the minimization and mitigation strategies. For more complex HCPs, biological objectives can be used to step down the biological goals into manageable, and, therefore, more understandable units. Multiple species HCPs may categorize goals by species or by habitat, depending on the structure of the operating conservation program. HCPs that are smaller in scope would have simpler biological goals that may not need to be stepped down into objectives. It should be noted that the biological goals of an individual HCP are not necessarily equivalent to the range-wide recovery goals and conservation of the species. However, if viewed collectively, the biological goals and objectives of HCPs covering the same species should support the recovery goals and conservation.

The biological goals and objectives of an HCP are commensurate with the specific impacts and duration of the applicant's proposed action. For example, low-effect HCPs generally have simple measurable biological goals, such as contributing to a regional preserve design through a mitigation bank or avoiding breeding habitat of a particular species.

How Do I Incorporate Biological Goals and Ojectives Into an HCP?

Determination of the biological goals and objectives is integral to the development of the operating conservation program. Conservation measures identified in an HCP, its accompanying incidental take permit, and/or IA, if used, provide the means for achieving the biological goals and objectives. We will work with the applicant to develop the biological goals and objectives by examining the applicant's proposed action and the overall conservation needs of the covered species and/or its habitat.

The biological goals and objectives are refined as the operating conservation program takes shape. Initial biological goals and objectives of an HCP begin by articulating the rationale behind the operating conservation program. The Services and applicant improve the initial biological goals by compiling the known information of the species, estimating the anticipated effects to the species, and stating any assumptions made. If the operating conservation program is relatively complex, the biological goal is divided into manageable and measurable objectives. Biological objectives are the different components needed to achieve the biological goal such as preserving sufficient habitat, managing the habitat to meet certain criteria, or ensuring the persistence of a specific minimum number of individuals. The specifics of the operating conservation program are the actions anticipated to obtain the biological objectives; therefore, we can use these objectives to strengthen the initial operating conservation program.

Elzinga *et al.* (1998) provide guidance for developing measurable objectives for rare plant monitoring that can be used for other species. Biological objectives should include the following: species or habitat indicator, location, action, quantity/state, and timeframe needed to meet the objective. They can be described as a condition to be met or as a change to be achieved relative to the existing condition. Biological objectives may be addressed in parallel. Conversely, achieving the biological objectives may need to occur in sequence. For instance, parallel objectives may be (1) maintaining the preserve site free of nonnative weeds and (2) enhancing the population from 4 individuals to 7 individuals. Sequential objectives may be (1) restoring of an area of habitat and then (2) reintroducing the species.

The Services and applicants have many resources to draw upon when determining the biological goals and objectives of an HCP. Both can use the available literature, State conservation strategies, candidate conservation plans, draft or final recovery plans or outlines, and other sources of relevant scientific and commercial information as guides in setting biological goals and objectives. Both can consult with species experts, State wildlife agencies, recovery teams, and/or scientific advisory committees.

What Is the Difference Between a Habitat-Based Goal and a Species-Based Goal?

The biological goals and objectives may be either habitat or species based. Habitat-based goals are expressed in terms of amount and/or quality of habitat. Species-based goals are expressed in terms specific to individuals or populations of that species. Complex multispecies or regional HCPs may use a combination of habitat- and species-specific goals and objectives. However, according to 50 CFR 17.22, 17.32, 222.102, and 222.307, each covered species must be addressed as if it were listed and named on the permit. Although the goals and objectives may be stated in habitat terms, each covered species that falls under that goal or objective must be accounted for individually as it relates to that habitat.

Are Permittees Required To Achieve the Biological Goals and Objectives of the HCP?

How the biological goals fit with the implementation of an HCP may be framed as a series of prescriptive measures to be carried out (a prescription-based HCP) or the ability to use any number of measures that achieve certain results (a results-based HCP). A prescription-based HCP outlines a series of tasks that are designed to meet the biological goals and objectives. This type of HCP may be most appropriate for smaller permits where the permittee would not have an ongoing management responsibility. A results-based HCP has flexibility in its management so that the permittee may institute the actions that are necessary as long as they achieve the intended result (*i.e.*, the biological goals and objectives), especially if they have a long-term commitment to the conservation program of the HCP. HCPs can also be a mix of the two strategies.

The Services and the applicant should determine the range of acceptable and anticipated management adjustments necessary to respond to new information. This process will enable the applicant to assess the potential economic impacts of adjustments before agreeing to the HCP while allowing for flexibility in the implementation of the HCP in order to meet the biological goals.

Regardless of the type of goals and objectives used and how they fit within implementation of the HCP, the Services will ensure that the biological goals are consistent with conservation actions needed to adequately minimize and mitigate impacts to the covered species to the maximum extent practicable. Whether the HCP is based on prescriptions, results, or both, the permittee's obligation for meeting the biological goals and objectives is proper implementation of the operating conservation program of the HCP. In other words, under the No Surprises assurances, a permittee is required only to implement the HCP, IA, if used, and terms and conditions of the permit. Implementation may include provisions for ongoing changes in actions in order

to achieve results or due to results from an adaptive management strategy.

Adaptive Management

What Is Adaptive Management?

Adaptive management is an integrated method for addressing uncertainty in natural resource management (Holling 1978, Walters 1986, Gundersen 1999). It also refers to a structured process for learning by doing. The concept is used in a number of different contexts, including the social science aspects of learning and change in natural resource management. The term adaptive management was adopted by Holling (1978) for natural resource management, who described adaptive management as an interactive process that not only reduces, but benefits from, uncertainty. Additionally, Walters (1986) breaks down categories of learning through implementation as ''active'' and ''passive'' adaptive management. Passive adaptation is where information obtained is used to determine a single best course of action. Active adaptation is developing and testing a range of alternative strategies (Walters and Holling 1990). The Services believe that both of these types of adaptive management are appropriate to consider when developing a strategy to address uncertainty. Therefore, we are defining adaptive management broadly as a method for examining alternative strategies for meeting measurable biological goals and objectives, and then, if necessary, adjusting future conservation management actions according to what is learned.

Implementation of adaptive strategies has been criticized for failing to resolve uncertainty or effectively implementing good experimental design (Walters 1997; Lee 1999). These failures are typically attributed to agency or stakeholder unwillingness to accept the risk involved in experimentation. The Services do have certain constraints in the HCP Program that may inhibit experimental design. For instance, stakeholder involvement in the development of many HCPs, including the adaptive management design, is largely at the discretion of the applicant.

Another restriction we face collectively (Services, applicants, other stakeholders) is the possible risks to species that may arise with using an experimental design. Many adaptive management processes with public/stakeholder involvement address large-scale management issues (*e.g.*, Florida Everglades, Grand Canyon). This type of process is complicated and involved, but appropriate for the scale of the issue. Similarly, more active and involved approaches to adaptive management are appropriate for large-scale HCPs. However, an active approach may pose too much of a risk to the species; therefore, a more passive approach may be the best course of action. An active approach may also be too cumbersome for the scope of the HCP and, therefore, a passive approach may be more appropriate.

Despite the potential obstacles to incorporating a comprehensive adaptive management strategy in an HCP, the Services incorporate adaptive management strategies when appropriate. We believe it is important that small- to medium-sized HCPs incorporate the flexibility to change implementation strategies after permit issuance. The HCP Program is flexible enough to develop adaptive management strategies that will facilitate and improve the decision-making process for the operating conservation program of a given HCP as well as provide for informative decision-making.

When Should Adaptive Management Be Incorporated Into an HCP?

The Services will consider adaptive management as a tool to address uncertainty in the conservation of a species covered by an HCP. Whenever an adaptive management strategy is used, the approved HCP must outline the agreed-upon future changes to the operating conservation program. Not all HCPs or all species covered in an incidental take permit need an adaptive management strategy. However, an adaptive management strategy is essential for HCPs that would otherwise pose a significant risk to the species at the time the permit is issued due to significant data or information gaps. Possible significant data gaps that may require an adaptive management strategy include, but are not limited to, a significant lack of specific information about the ecology of the species or its habitat (*e.g.*, food preferences, relative importance of predators, territory size), uncertainty in the effectiveness of habitat or species management techniques, or lack of knowledge on the degree of potential effects of the activity on the species covered in the incidental take permit.

Often, a direct relationship exists between the level of biological uncertainty for a covered species and the degree of risk that an incidental take permit could pose for that species. Therefore, the operating conservation program may need to be relatively cautious initially and adjusted later based on new information, even though a cautious approach may limit the number of alternative strategies that may be tested. A practical adaptive management strategy within the operating conservation program of a long-term incidental take permit will include milestones that are reviewed at scheduled intervals during the lifetime of the incidental take permit and permitted action. If a relatively high degree of risk exists, milestones and adjustments may need to occur early and often.

Adaptive management should not be a catchall for every uncertainty or a means to address issues that could not be resolved during negotiations of the HCP. There may be some circumstances with such a high degree of uncertainty and potential significant effects that a species should not receive coverage in an incidental take permit at all until additional research is conducted.

What Are the Elements of an Adaptive Management Strategy in HCPs?

In an HCP, adaptive management strategies can assist the Services and the applicant in developing an adequate operating conservation program and improving its effectiveness. An adaptive management strategy should (1) identify the uncertainty and the questions that need to be addressed to resolve the uncertainty; (2) develop alternative strategies and determine which experimental strategies to implement; (3) integrate a monitoring program that is able to detect the necessary information for strategy evaluation; and (4) incorporate feedback loops that link implementation and monitoring to a decision-making process (which may be similar to a dispute-resolution process) that result in appropriate changes in management. If you are developing adaptive management strategies, we encourage you to review the scientific literature that discusses adaptive management (for a starting point see literature cited at the end of the addendum).

Identifying the uncertainty to be addressed is the foundation of the adaptive management strategy. Other components include a description of the goal of the operating conservation program (*i.e.*, the biological goals and objectives of the HCP) and the identification of the parameters that potentially affect that goal. This requires communication between the applicant and the Services to identify expectations for the adaptive management strategy and may also involve assistance from scientists. After this step, we (the Services, applicants, and any other participants) will develop the range of possible ''experimental'' strategies which may involve some type of

modeling (which can be as simple as a written description of the expected outcomes or as complex as a mathematical model demonstrating expected outcomes) of the resource in question. If modeling is involved, we must clearly articulate the assumptions and limitations of the model used. Many factors may influence the type of alternatives to explore, including, but not limited to, economics, policies and regulations, and amount of risk to the species. This stage may be an appropriate time to involve other stakeholders to help identify the alternative strategies.

Next, a monitoring program needs to be designed that will adequately detect the results of the adaptive management strategy. Integration of the HCP's monitoring program into the adaptive management strategy is essential. The monitoring program plays an essential role of determining whether the chosen strategy(ies) is providing the desired outcome (*i.e.*, achieving the biological goals of the HCP). If a scientific advisory committee is being used, this may be an appropriate item for their review. An applicant may also submit a monitoring program for independent peer review.

Finally, an adaptive management strategy must define the feedback process that will be used to ensure that the new information gained from the monitoring program results in effective change in management of the resource.

How Does Adaptive Management Affect No Surprises Assurances?

HCP assurances (No Surprises) and the use of adaptive management strategies are compatible. The assurances apply once all appropriate HCP provisions have been mutually crafted and agreed upon and approved by the Services and the applicant. Adaptive management strategies, if used, are part of those provisions, and their implementation becomes part of a properly implemented conservation plan. When an HCP, permit, and IA, if used, incorporate an adaptive management strategy, it should clearly state the range of possible operating conservation program adjustments due to significant new information, risk, or uncertainty. This range defines the limits of what resource commitments may be required of the permittee. This process will enable the applicant to assess the potential economic impacts of adjustments before agreeing to the HCP.

Is Adaptive Management the Only Method for Changing the Operating Conservation Program of an HCP?

HCPs may be designed to provide flexibility other than through the use of adaptive management. The No Surprises final rule lays a foundation for contingency planning in HCPs that may or may not include adaptive management. This contingency planning is addressed largely under the topic of ''changed circumstances.'' Changed circumstances are circumstances that can be reasonably anticipated, and the HCP can incorporate measures to be implemented if the circumstances occur. The permittee or another responsible party may need the flexibility provided by the ''changed circumstances'' regulation to employ alternative methods or strategies within the operating conservation program to achieve the biological goals and objectives. This flexibility also allows previously agreed upon management and/or mitigation actions to be implemented or discontinued, as needed, in response to changed circumstances. These actions are not necessarily adaptive management and may be a process for implementing change to the operating program or simply a different conservation measure. The HCP, incidental take permit, and IA, if any, must describe the agreed upon range of management and/or mitigation actions and the process by which the management and funding decisions are made and implemented.

How Can an HCP Use Adaptive Management Without a Large and Expensive Experimental Design?

Adaptive management has traditionally been viewed and designed for large-scale systems. However, in some situations we may want to retain the flexibility of addressing uncertainty through an adaptive management strategy at a smaller scale. In such situations, an adaptive management strategy could take many forms including creating a simple feedback loop so that management changes could be implemented based on results of the HCP's monitoring program. Similarly, the agreed-upon strategy may be integration of an HCP with any ongoing research, recovery planning, and conservation planning by Federal, State, and local agencies. This integration is an efficient way to address uncertainty and provide the information needed to guide changes in small to medium sized HCPs. We can also view smaller, yet similar HCPs collectively across a landscape in order to adapt our approaches in future HCPs (Johnson 1999). This approach will require us to coordinate information among similar HCPs, including communication with the individual applicants regarding their role in such a landscape approach.

Monitoring

What Is Monitoring in the HCP Program?

Monitoring is a mandatory element of all HCPs (See 50 CFR 17.22, 17.32, and 222.307). When properly designed and implemented, monitoring programs for HCPs should provide the information necessary to assess compliance and project impacts, and verify progress toward the biological goals and objectives. Monitoring also provides the scientific data necessary to evaluate the success of the HCP's operating conservation programs with respect to the possible use of those strategies in future HCPs or other programs that contribute to the conservation of species and their habitat. The HCP Handbook already provides guidance for developing monitoring measures (Chapter 3, section B.4.) and discusses reporting requirements (Chapter 6, section E.4.). The following information further clarifies and provides additional guidance for the monitoring component of an HCP, permit, or IA.

What Are the Types of Monitoring That Can Be Incorporated Into HCPs?

The Services and the applicant must ensure that the monitoring program of an HCP provides information to: (1) Evaluate compliance; (2) determine if biological goals and objectives are being met; and (3) provide feedback information for an adaptive management strategy, if one is used. HCP monitoring is divided into two types. *Compliance Monitoring* is verifying that the permittee is carrying out the terms of the HCP, permit, and IA, if one is used. *Effects and Effectiveness Monitoring* evaluates the effects of the permitted action and determines whether the effectiveness of the operating conservation program of the HCP are consistent with the assumptions and predictions made when the HCP was developed and approved; in other words, is the HCP achieving the biological goals and objectives.

Scientific literature discussing monitoring uses similar terms as the addendum but the terms may have different meanings. For instance, the term ''validation monitoring'' is the same concept as the addendum's term ''effectiveness monitoring.'' However, ''effectiveness monitoring'' in the scientific literature simply means measuring the status of species. ''Implementation monitoring'' is roughly equivalent to the addendum's term ''compliance monitoring'' with the added regulatory nature of the involvement of a permit.

What Determines the Extent of a Monitoring Program?

The scope of the monitoring program should be commensurate with the scope and duration of the operating conservation program and the project impacts. Biological goals and objectives provide a framework for developing a monitoring program that measures progress toward meeting those goals and objectives. If an HCP, permit, and/or IA has an adaptive management strategy, integrating the monitoring program into this strategy is crucial in order to guide any necessary changes in management.

Monitoring programs for large-scale or regional planning efforts may be elaborate and track more than one component of the HCP (*e.g.,* habitat quality or collection of mitigation fees). Conversely, monitoring programs for HCPs with smaller impacts of short duration might only need to file simple reports that document whether the HCP has been implemented as described. For example, if an HCP affects only a portion of a population, the permittee should not generally be responsible for monitoring the entire population. In addition, it may not be appropriate for a monitoring program to involve counting of populations or individuals or making an assessment of habitat. The appropriate unit of measure in a monitoring program depends upon the specific impacts and operating conservation program within an HCP. The Services are responsible for ensuring that the appropriate units of measure and protocols are used and should coordinate monitoring programs to obtain a larger view of the status of a population. The applicant and the Services should also design the monitoring program to reflect the structure of the biological goals and objectives.

The monitoring program should reflect the measurable biological goals and objectives. The following components are essential for most monitoring protocols (the size and scope of the HCP will dictate the actual level of detail in each item): (1) Assess the implementation and effectiveness of the HCP terms and conditions (*e.g.,* financial responsibilities and obligations, management responsibilities, and other aspects of the incidental take permit, HCP, and the IA, if applicable); (2) determine the level of incidental take of the covered species; (3) determine the biological conditions resulting from the operating conservation program (*e.g.,* change in the species' status or a change in the habitat conditions); and (4) provide any information needed to implement an adaptive management strategy, if utilized. An effective monitoring program is flexible enough to allow modifications, if necessary, to obtain the appropriate information.

Monitoring programs will vary based on whether they are for low-effect or for regional, multispecies HCPs; however, the general elements of each program are similar. Post-activity or post-construction monitoring, along with a single report at the end of the monitoring period, will often satisfy the monitoring requirements for low-effect HCPs. For other HCPs, monitoring programs will be more comprehensive and may include milestones, timelines, and/or trigger points for change.

Effects and effectiveness monitoring includes, but is not limited to, the following:

1. Periodic accounting of incidental take that occurred in conjunction with the permitted activity;

2. Surveys to determine species status, appropriately measured for the particular operating conservation program (*e.g.,* presence, density, or reproductive rates);

3. Assessments of habitat condition;

4. Progress reports on fulfillment of the operating conservation program (*e.g.,* habitat acres acquired and/or restored); and

5. Evaluations of the operating conservation program and its progress toward its intended biological goals.

What Units Should Be Monitored in an HCP?

Each HCP's monitoring program should be customized to reflect the biological goals, the scope, and the particular implementation tasks of the HCP. In order to obtain meaningful information, the applicant and the Services should structure the monitoring methods and standards so that we can compare the results from one reporting period to another period or compare different areas, and the monitoring protocol responds to the question(s) asked. Monitored units should reflect the biological objective's measurable units (*e.g.,* if the biological objective is in terms of numbers of individuals, the monitoring program should measure the number of individuals). The monitoring program will be based on sound science. Standard survey or other previously-established monitoring protocols should be used. Although the specific methods used to gather necessary data may differ depending on the species and habitat types, monitoring programs should use a multispecies approach when appropriate.

What Role Do the Services Have in Monitoring?

Both the Services and the permittee are responsible for monitoring the implementation of the HCP. The Services' primary monitoring responsibilities (with the assistance of the permittee) are ensuring compliance with the permit's terms and conditions, including proper implementation of the HCP by the permittee. Permittee assistance with compliance monitoring includes monitoring the implementation and reporting their findings/results. The permittee, with the assistance of the Services, is responsible for verifying the effects and effectiveness of the HCP. To monitor all aspects of an HCP effectively, and to ensure its ultimate success, the entire monitoring program should incorporate both types of monitoring. The Services and the applicant should coordinate the two aspects of monitoring, and the monitoring program should also clearly designate who is responsible for the various aspects of monitoring.

The Services are responsible for ensuring that the permittee is meeting the terms and conditions of the HCP, its accompanying incidental take permit, and IA, if any (*i.e.,* compliance monitoring). The Services should verify adherence to the terms and conditions of the incidental take permit, HCP, IA, and any other related agreements and should ensure that incidental take of the covered species does not exceed the level authorized under the incidental take permit. Regulations at 50 CFR §§ 13.45 and 222.301, provide the authority for the Services to require periodic reports unless otherwise specified by the incidental take permit. Also, the Services will ensure that the reporting requirements are tailored for documenting compliance with the incidental take permit (*e.g.,* documentation of habitat acquisition, use of photographs). These reports help determine whether the permittee is properly implementing the terms and conditions of the HCP, its incidental take permit, and any IA, and will provide a long-term administrative record documenting progress made under the incidental take permit.

In addition to reviewing reports submitted by the permittee, it is important for the Services to make field visits to verify the accuracy of monitoring data submitted by the permittees. These visits allow the Services to check for information, identify unanticipated deficiencies or benefits, develop closer cooperative ties with the permittee, prevent accidental violations of the incidental take permit's

terms and conditions, and assist the permittee and Services in developing corrective actions when necessary.

For large-scale or regional HCPs, oversight committees, made up of representatives from significantly affected entities (*e.g.,* State Fish and Wildlife agencies), are often used to ensure proper and periodic review of the monitoring program and to ensure that each program properly implements the terms and conditions of the incidental take permit. For example, the Wisconsin Statewide HCP for the Karner blue butterfly includes an auditing approach to ensure incidental take permit compliance. The lead permittee, Wisconsin Department of Natural Resources (Wisconsin DNR), will initially conduct annual on-site audits of each partner. FWS will audit the Wisconsin DNR in a similar fashion. In addition, FWS will accompany the Wisconsin DNR on the partner audits as appropriate to understand partner compliance levels. Over time, if performance levels are acceptable, Wisconsin DNR will conduct the audits less frequently. Each partner will provide an annual monitoring report and will submit these along with their audit report to FWS.

For large-scale or regional HCPs, oversight committees should periodically evaluate the permittee's implementation of the HCP, its incidental take permit, and IA and the success of the operating conservation program in reaching its identified biological goals and objectives. Such committees usually include species experts and representatives of the permittee, the Services, and other affected agencies and entities. Submitting the committee's findings to recognized experts in pertinent fields (*e.g.,* conservation biologists or restoration specialists) for review or having technical experts conduct field investigations to assess implementation of the terms and conditions would also be beneficial. Because the formation of these committees may be subject to the Federal Advisory Committee Act, the role of the participants and the purpose of the meetings must be clearly identified. Oversight committees should meet at least annually and review implementation of the monitoring program and filing of reports as defined in the HCP, permit, and/or IA, if one is used.

What Role Does the Permittee Have in Monitoring?

Not only do permittees provide regular implementation reports, they are also involved in effects and effectiveness monitoring. Effects monitoring determines the extent of impacts from the permitted activity. Effectiveness monitoring, in the HCP program, assesses progress toward the biological goals and objectives of the HCP (*e.g.,* if the conservation strategies are producing the desired habitat conditions or population numbers). Effects and effectiveness monitoring may also involve assessing threats and population trends of the covered species related to the permitted activities, as well as monitoring the development of targeted habitat conditions. Permittees, with assistance from the Services, should ensure that the HCP includes provisions for monitoring the effects and effectiveness of the HCP. The Services and the HCP permittee will cooperatively develop the effects and effectiveness monitoring program and determine responsibility for its various components. In multi-party HCPs, different parties may monitor different aspects of the HCP. The Services must periodically review any monitoring program to confirm that it is conducted according to their standards.

What Should Be Included in Monitoring Reports?

The Services will streamline the reporting requirements for monitoring programs by requesting all reports in a single document. The HCP, permit, or IA should specifically state the level of detail and quantification needed in the monitoring report and tailor report due dates to the activities conducted under the incidental take permit (*e.g.,* due at the end of a particular stage of the project or the anniversary date of incidental take permit issuance). Most monitoring programs require reports annually, usually due on the anniversary date of incidental take permit issuance. Wherever possible, the Services will coordinate the due dates with other reporting requirements (*e.g.,* State reports), so the permittee can satisfy more than one reporting requirement with a single report. The following list represents the information generally needed in a monitoring report:

1. Biological goals and objectives of the HCP (which may need to be reported only once);
2. Objectives for the monitoring program (which may need to be reported only once);
3. Effects on the covered species or habitat;
4. Location of sampling sites;
5. Methods for data collection and variables measured;
6. Frequency, timing, and duration of sampling for the variables;
7. Description of the data analysis and who conducted the analyses; and
8. Evaluation of progress toward achieving measurable biological goals and objectives and other terms and conditions as required by the incidental take permit or IA.

These elements may be simplified for periods of no activity or low-effect HCPs. If a required report is not submitted by the date specified in the HCP or incidental take permit terms and conditions, or is inadequate, the Services will notify the permittee. The Services have discretion to offer the permittee an extension of time to demonstrate compliance. The Services have examined this reporting guidance under the Paperwork Reduction Act of 1995 and found that it does not contain requests for additional information or an increase in the collection requirements other than those already approved for incidental take permits (OMB approval for FWS, # 1018–0094; for NMFS, # 0648–0230).

How Are Monitoring Programs Funded?

The ESA and the implementing regulations (50 CFR 17 and 222) require that HCPs specify the measures the permittee will adopt to ensure adequate funding for the HCP. The Services should not approve an HCP that does not contain an adequate funding commitment from the applicant/permittee to support an acceptable monitoring program unless the HCP establishes alternative funding mechanisms. The Services and the applicant should work together to develop the monitoring program and determine who will be responsible for monitoring the various components of the HCP. Specific monitoring tasks may be assigned to entities other than the permittee (*e.g.*, State or Tribal agencies) as long as the Services and parties responsible for implementing the HCP approve of the monitoring assignment. The terms of the HCP, incidental take permit, and IA may contain funding mechanisms that provide for a public (*e.g.*, local, State, or Federal) or a private entity to conduct all or portions of the monitoring. This funding mechanism must be agreed upon by the Services and the parties responsible for implementing the HCP.

Permit Duration

How Do We Decide the Length of Time for Which the Permit Is in Place?

Both FWS and NMFS regulations for incidental take permits outline factors to consider when determining incidental take permit duration (50 CFR 17.32 and 222.307). These factors include duration of the applicant's proposed activities and the expected positive and negative

effects on covered species associated with the proposed duration, including the extent to which the operating conservation program will increase the long-term survivability of the listed species and/or enhance its habitat. For instance, if the permittee's action or the implementation of the conservation measures continually occur over a long period of time, such as with timber harvest management, the permit would need to encompass that time period.

The Services will also consider the extent of information underlying the HCP, the length of time necessary to implement and achieve the benefits of the operating conservation program, and the extent to which the program incorporates adaptive management strategies. Significant biological uncertainty may necessitate an adaptive management strategy. The gathering of new information through the monitoring program requires an appropriate period of time for meaningful interpretation of new information into changes in management; this analysis could necessitate a permit with a longer duration. However, if an adaptive management strategy that significantly reduces the risk of the HCP to that species cannot be devised and implemented, then, if the issuance criteria are met, a shorter duration may be appropriate.

The varying biological impacts resulting from the proposed activity (*e.g.,* variations in the length of timber rotations and treatments versus a real estate subdivision buildout) and the nature or scope of the permitted activity and conservation program in the HCP (*e.g.,* housing or commercial developments versus long-term sustainable forestry; conservation easements) account for variation in permit duration. Longer permits may be necessary to ensure long-term active commitments to the HCP and typically include up-front contingency planning for changed circumstances to allow appropriate changes in the conservation measures.

Public Participation

What Is the Public Participation Requirement for HCPs?

As stated in the HCP Handbook in Chapter 6.B, we currently require a minimum 30-day public comment period for all HCP applications. This comment period is required by section 10(c) of the ESA and the implementing regulations at 50 CFR 17 and 222. The Services recognize the concern of the public regarding an inadequate time for the public comment period, especially for large-scale HCPs. With a few exceptions, we are extending the minimum comment period to 60 days for most HCPs. The exceptions to a 60-day comment period would be for low-effect HCPs, individual permits under a programmatic HCP, and large-scale, regional, or exceptionally complex HCPs.

The Services believe the current 30-day public comment period provides enough time for interested parties to review major HCP amendments and low-effect HCPs. Low-effect HCPs have a categorical exclusion from NEPA and, therefore, do not have a NEPA public participation requirement. Similarly, in some cases, individual permits issued under a programmatic HCP may not need additional public review since the larger, programmatic HCP would have undergone more extensive review.

However, for large-scale, regional, or exceptionally complex HCPs, the Services are increasingly encouraging applicants to use informational meetings and/or advisory committees. In addition, the minimum comment period for these HCPs is now 90 days, unless significant public participation occurs during HCP development. With the extension of the public comment periods, the recommended timeline targets for processing incidental take permits are extended accordingly: The target timeline from receipt of a complete application to the issuance of a permit for low-effect HCPs will remain up to 3 months, HCPs with an Environmental Assessment (EA) will be 4 to 6 months, and HCPs with a 90-day comment period and/or an Environmental Impact Statement (EIS) may be up to 12 months.

How Do the Services Let Interested Parties Know About the HCP's Comment Period?

During the public comment period, any member of the public may review and comment on the HCP and the accompanying NEPA document, if applicable. If an EIS is required, the public can also participate during the scoping process. We announce all complete applications received in the **Federal Register**. When practicable, the Services will announce the availability of HCPs in electronic format and in local newspapers of general circulation.

How Do the Services or Applicants Incorporate Public Participation During the Development of an HCP?

The Services will strongly encourage potential applicants to allow for public participation during the development of an HCP, particularly if non-Federal public agencies (*e.g.,* State Fish and Wildlife agencies) are involved. Although the development of an HCP is the applicant's responsibility, the Services will encourage applicants for most large-scale, regional HCP efforts to provide extensive opportunities for public involvement during the planning and implementation process.

The Services encourage the use of scientific advisory committees during the development and implementation of an HCP. The integration of a scientific advisory committee and perhaps other stakeholders improves the development and implementation of any adaptive management strategy. Advisory committees can assist the Services and applicants in identifying key components of uncertainty and determining alternative strategies for addressing that uncertainty. We also encourage the use of peer review for an HCP. An applicant, with guidance from the Services, may seek independent scientific review of specific sections of an HCP and its operating conservation strategy to ensure the use of the best scientific information.

How Do the Services Consider Tribal Interest in an HCP?

We recommend that applicants include participation by affected Native American tribes during the development of the HCP. If an applicant chooses not to consult with Tribes, under the Secretarial Order on Federal-Tribal Trust Responsibilities and ESA, the Services will consult with the affected Tribes to evaluate the effects of the proposed HCP on tribal trust resources. We will also provide the information gained from the consulted tribal government to the HCP applicant prior to the submission of the draft HCP for public comment and will advocate the incorporation of measures that will conserve, restore, or enhance Tribal trust resources. After consultation with the tribal government and the applicant and after careful consideration of the Tribe's concerns, we will clearly state the rationale for the recommended final decision and explain how the decision relates to the Services' trust responsibility.

Literature Cited

Dovers, S. R. and C. D. Mobbs. 1997. An alluring prospect? Ecology and the requirements of adaptive management. Klomp, N. I. & Lunt, I. D. (eds.). *Frontiers in Ecology: Building the Links.* Elsevier Science, Oxford.

Elzinga, C. L., Salzer, D. W., and J. W. Willoughby. 1998. *Measuring and monitoring plant populations.* BLM Technical Reference 1730–1. BLM, Denver, CO.

Gunderson, L. 1999. Resilience, flexibility and adaptive management—antidotes for

spurious certitude? *Conservation Ecology.* 3(1): 7 [online] URL: http://www.consecol.org/vol3/iss1/art7.

Holling, C. S. (ed). 1978. *Adaptive Environmental Management and Assessment* Wiley, Chichester.

Johnson, B. L. 1999. Introduction to the special feature: adaptive management—scientifically sound, socially challenged? *Conservation Ecology* 3(1):10 [online] URL: http://www.consecol.org/vol3/iss1/art10.

Johnson, B. L. 1999. The role of adaptive management as an operational approach for resource management agencies. *Conservation Ecology* 3(2): 8 [online] URL: http://www.consecol.org/vol3/iss2/art8.

Lee, K. N. 1999. Appraising adaptive management. *Conservation Ecology* 3(2): 3 [online] URL: http://www.consecol.org/vol3/iss2/art3.

McLain, R. J. & Lee, R. G. 1996. Adaptive management: promises and pitfalls, *Environmental Management,* 20: 437–448.

Rogers, K. 1998. Managing science/management partnerships: a challenge of adaptive management. *Conservation Ecology* [online] 2(2): Response 1 [online] URL: http://www.consecol.org/vol2/iss2/resp1.

Shindler, B., B. Steel, and P. List. 1996. Public judgements of adaptive management. *Journal of Forestry* 94: 5.

Walters, C. 1986. *Adaptive Management of Renewable Resources* Macmillan, New York.

Walters, C. 1997. Challenges in adaptive management of riparian and coastal ecosystems. *Conservation Ecology* 1(2):1 [online] URL: http://www.consecol.org/vol1/iss2/art1.

Walters, C. J. and C. S. Holling. 1990. Large-scale management experiments and learning by doing. *Ecology* 71: 2060.

Dated: April 4, 2000.

Jamie Rappaport Clark,

Director, Fish and Wildlife Service.

Dated: May 19, 2000.

Penelope D. Dalton,

Assistant Administrator for Fisheries, National Marine Fisheries Service.

[FR Doc. 00–13553 Filed 5–31–00; 8:45 am]

BILLING CODE 4310–55–P; 3510–22–P

Reader Aids

Federal Register

Vol. 65, No. 106

Thursday, June 1, 2000

CUSTOMER SERVICE AND INFORMATION

Federal Register/Code of Federal Regulations	
General Information, indexes and other finding aids	**202–523–5227**
Laws	**523–5227**
Presidential Documents	
Executive orders and proclamations	**523–5227**
The United States Government Manual	**523–5227**
Other Services	
Electronic and on-line services (voice)	**523–4534**
Privacy Act Compilation	**523–3187**
Public Laws Update Service (numbers, dates, etc.)	**523–6641**
TTY for the deaf-and-hard-of-hearing	**523–5229**

ELECTRONIC RESEARCH

World Wide Web

Full text of the daily Federal Register, CFR and other publications:

http://www.access.gpo.gov/nara

Federal Register information and research tools, including Public Inspection List, indexes, and links to GPO Access:

http://www.nara.gov/fedreg

E-mail

PENS (Public Law Electronic Notification Service) is an E-mail service for notification of recently enacted Public Laws. To subscribe, send E-mail to

listserv@www.gsa.gov

with the text message:

subscribe PUBLAWS-L your name

Use listserv@www.gsa.gov only to subscribe or unsubscribe to PENS. We cannot respond to specific inquiries.

Reference questions. Send questions and comments about the Federal Register system to:

info@fedreg.nara.gov

The Federal Register staff cannot interpret specific documents or regulations.

FEDERAL REGISTER PAGES AND DATE, JUNE

34913–35258 1

CFR PARTS AFFECTED DURING JUNE

At the end of each month, the Office of the Federal Register publishes separately a List of CFR Sections Affected (LSA), which lists parts and sections affected by documents published since the revision date of each title.

REMINDERS

The items in this list were editorially compiled as an aid to Federal Register users. Inclusion or exclusion from this list has no legal significance.

RULES GOING INTO EFFECT JUNE 1, 2000

AGRICULTURE DEPARTMENT

Agricultural Marketing Service

Spearmint oil produced in Far West; published 2-9-00

COMMERCE DEPARTMENT

Export Administration Bureau

Export administration regulations:

Restrictive trade practices or boycotts; editorial clarifications and revisions; published 6-1-00

COMMERCE DEPARTMENT

National Oceanic and Atmospheric Administration

Fishery conservation and management:

Atlantic highly migratory species—

Vessel monitoring system; published 10-14-99

ENERGY DEPARTMENT

Federal Energy Regulatory Commission

Electric utilities (Federal Power Act):

Rate schedules filing—

Electric rate schedule sheets; designation procedures; published 4-7-00

HEALTH AND HUMAN SERVICES DEPARTMENT

Food and Drug Administration

Organization, functions, and authority delegations:

Deputy Commissioner et al.; published 6-1-00

HEALTH AND HUMAN SERVICES DEPARTMENT

Inspector General Office, Health and Human Services Department

Privacy Act: implementation; published 6-1-00

HOUSING AND URBAN DEVELOPMENT DEPARTMENT

Public and Indian housing:

Public housing capital fund program; published 5-2-00

INTERIOR DEPARTMENT

Minerals Management Service

Royalty management:

Oil valuation for royalty due on Federal leases; published 3-15-00

PENSION BENEFIT GUARANTY CORPORATION

Single-employer plans:

Allocation of assets—

Interest assumptions for valuing and paying benefits; published 5-15-00

TRANSPORTATION DEPARTMENT

Federal Aviation Administration

Airworthiness directives:

Boeing; published 4-27-00

MD Helicopters Inc.; published 5-17-00

TRANSPORTATION DEPARTMENT

Federal Highway Administration

Engineering and traffic operations:

Emergency relief program; disaster threshold; published 5-2-00

TRANSPORTATION DEPARTMENT

National Highway Traffic Safety Administration

American Automobile Labeling Act; implementation:

Motor vehicle content labeling; domestic and foreign parts content information; published 7-28-99

COMMENTS DUE NEXT WEEK

AGRICULTURE DEPARTMENT

Agricultural Marketing Service

Walnuts grown in—

California; comments due by 6-5-00; published 4-5-00

COMMERCE DEPARTMENT

National Oceanic and Atmospheric Administration

Fishery conservation and management:

Alaska; fisheries of Exclusive Economic Zone—

Halibut; comments due by 6-6-00; published 5-22-00

Scallop; comments due by 6-5-00; published 4-21-00

Northeastern United States fisheries—

Spiny dogfish; comments due by 6-5-00; published 5-4-00

DEFENSE DEPARTMENT

Privacy Act; implementation

Defense Commissary Agency; comments due by 6-9-00; published 4-10-00

Defense Threat Reduction Agency; comments due by 6-9-00; published 4-10-00

ENVIRONMENTAL PROTECTION AGENCY

Air pollutants, hazardous; national emission standards:

Polyether polyols production, etc.; comments due by 6-7-00; published 5-8-00

Radionuclides other than radon from DOE facilities and from Federal facilities other than NRC licensees and not covered by Subpart H; comments due by 6-9-00; published 5-9-00

Air pollutants; hazardous; national emission standards:

Polyether polyols production, etc.; comments due by 6-7-00; published 5-8-00

Air quality implementation plans; approval and promulgation; various States:

Arkansas; comments due by 6-8-00; published 5-9-00

Oregon; comments due by 6-9-00; published 5-10-00

Air quality implementation plans; √A√approval and promulgation; various States; air quality planning purposes; designation of areas:

Indiana; comments due by 6-9-00; published 5-10-00

Hazardous waste program authorizations:

Oklahoma; comments due by 6-9-00; published 5-10-00

West Virginia; comments due by 6-9-00; published 5-10-00

Superfund program:

National oil and hazardous substances contingency plan—

National priorities list update; comments due by 6-8-00; published 5-9-00

Water supply:

National primary drinking water regulations—

Long Term 1 Enhanced Surface Water Treatment and Filter Backwash Rule; comments due by 6-9-00; published 4-10-00

FARM CREDIT ADMINISTRATION

Farm credit system:

Organization—

Stockholder vote on like lending authority; comments due by 6-8-00; published 5-9-00

FEDERAL COMMUNICATIONS COMMISSION

Common carrier services:

Carrier identification codes; ''soft slamming'' and carrier identification problems arising from shared use, and resellers requirement to obtain own codes; comments due by 6-6-00; published 5-23-00

Incumbent local exchange carriers; depreciation requirements review; 1998 biennial regulatory review; comments due by 6-9-00; published 4-10-00

Radio stations; table of assignments:

New Mexico; comments due by 6-5-00; published 5-3-00

FEDERAL DEPOSIT INSURANCE CORPORATION

Risk-based capital:

Recourse and direct credit substitutes; comments due by 6-7-00; published 3-8-00

FEDERAL HOUSING FINANCE BOARD

Federal home loan bank system:

Advances, eligible collateral, and new business activities; comments due by 6-7-00; published 5-8-00

FEDERAL RESERVE SYSTEM

Risk-based capital:

Recourse and direct credit substitutes; comments due by 6-7-00; published 3-8-00

FEDERAL TRADE COMMISSION

Industry guides:

Household furniture industry; comments due by 6-9-00; published 4-10-00

HEALTH AND HUMAN SERVICES DEPARTMENT

Health Care Financing Administration

Medicare:

Skilled nursing facilities; prospective payment system and consolidated billing; update; comments due by 6-9-00; published 4-10-00

INTERIOR DEPARTMENT

Indian Affairs Bureau

Education:

Southwestern Indian Polytechnic Institute; personnel system; comments due by 6-7-00; published 5-8-00

INTERIOR DEPARTMENT

Fish and Wildlife Service

Endangered and threatened species:

California tiger salamander; Santa Barbara distinct population; comments due by 6-5-00; published 5-19-00

Importation, exportation, and transportation of wildlife:

Injurious non-indigenous fish and wildlife; comments due by 6-7-00; published 3-6-00

NATIONAL ARCHIVES AND RECORDS ADMINISTRATION

Public availability and use:

NARA facilities; locations and hours of use; comments due by 6-7-00; published 5-8-00

SECURITIES AND EXCHANGE COMMISSION

Securities:

Trading data; electronic submission by exchange members, brokers, and dealers; comments due by 6-7-00; published 5-8-00

TRANSPORTATION DEPARTMENT

Coast Guard

Drawbridge operations:

Arkansas; comments due by 6-6-00; published 4-7-00

Ports and waterways safety:

Atlantic Ocean, Virginia Beach, VA; safety zone; comments due by 6-5-00; published 5-26-00

TRANSPORTATION DEPARTMENT

Federal Aviation Administration

Airworthiness directives:

Airbus; comments due by 6-9-00; published 5-10-00

Boeing; comments due by 6-5-00; published 4-19-00

Eurocopter Deutschland; comments due by 6-5-00; published 4-6-00

McDonnell Douglas; comments due by 6-5-00; published 4-5-00

Saab; comments due by 6-9-00; published 5-10-00

Class C airspace; comments due by 6-8-00; published 4-25-00

Class D airspace; comments due by 6-5-00; published 5-5-00

Class E airspace; comments due by 6-5-00; published 4-21-00

Restricted areas; comments due by 6-9-00; published 4-25-00

TRANSPORTATION DEPARTMENT

National Highway Traffic Safety Administration

Fuel economy standards:

Alternative fuel vehicles; manufacturing incentives; comments due by 6-8-00; published 5-9-00

Insurer reporting requirements:

Insurers required to file report; lists; comments due by 6-6-00; published 4-7-00

Motor vehicle safety standards:

Occupant crash protection—

Occupant protection in interior impact; head impact protection; comments due by 6-5-00; published 4-5-00

TREASURY DEPARTMENT

Comptroller of the Currency

Risk-based capital:

Recourse and direct credit substitutes; comments due by 6-7-00; published 3-8-00

TREASURY DEPARTMENT

Fiscal Service

Federal management services:

Automated Clearing House; Federal agencies participation; comments due by 6-6-00; published 4-7-00

Correction; comments due by 6-6-00; published 4-12-00

TREASURY DEPARTMENT

Thrift Supervision Office

Risk-based capital:

Recourse and direct credit substitutes; comments due by 6-7-00; published 3-8-00

LIST OF PUBLIC LAWS

This is a continuing list of public bills from the current session of Congress which have become Federal laws. It may be used in conjunction with ''P L U S'' (Public Laws Update Service) on 202–523–6641. This list is also available online at http://www.nara.gov/fedreg.

The text of laws is not published in the **Federal Register** but may be ordered in ''slip law'' (individual pamphlet) form from the Superintendent of Documents, U.S. Government Printing Office, Washington, DC 20402 (phone, 202–512–1808). The text will also be made available on the Internet from GPO Access at http://www.access.gpo.gov/nara/index.html. Some laws may not yet be available.

S.J. Res. 44/P.L. 106–205

Supporting the Day of Honor 2000 to honor and recognize the service of minority veterans in the United States Armed Forces during World War II. (May 26, 2000; 114 Stat. 312)

H.R. 154/P.L. 106–206

To allow the Secretary of the Interior and the Secretary of Agriculture to establish a fee system for commercial filming activities on Federal land, and for other purposes. (May 26, 2000; 114 Stat. 314)

H.R. 371/P.L. 106–207

Hmong Veterans' Naturalization Act of 2000 (May 26, 2000; 114 Stat. 316)

H.R. 834/P.L. 106–208

National Historic Preservation Act Amendments of 2000 (May 26, 2000; 114 Stat. 318)

H.R. 1377/P.L. 106–209

To designate the facility of the United States Postal Service located at 9308 South Chicago Avenue, Chicago, Illinois, as the ''John J. Buchanan Post Office Building''. (May 26, 2000; 114 Stat. 320)

H.R. 1832/P.L. 106–210

Muhammad Ali Boxing Reform Act (May 26, 2000; 114 Stat. 321)

H.R. 3629/P.L. 106–211

To amend the Higher Education Act of 1965 to improve the program for American Indian Tribal Colleges and Universities under part A of title III. (May 26, 2000; 114 Stat. 330)

H.R. 3707/P.L. 106–212

American Institute in Taiwan Facilities Enhancement Act (May 26, 2000; 114 Stat. 332)

S. 1836/P.L. 106–213

To extend the deadline for commencement of construction of a hydroelectric project in the State of Alabama. (May 26, 2000; 114 Stat. 334)

Last List May 25, 2000

Public Laws Electronic Notification Service (PENS)

PENS is a free electronic mail notification service of newly enacted public laws. To subscribe, go to www.gsa.gov/archives/publaws-l.html or send E-mail to **listserv@www.gsa.gov** with the following text message:

SUBSCRIBE PUBLAWS-L Your Name.

Note: This service is strictly for E-mail notification of new laws. The text of laws is not available through this service. **PENS** cannot respond to specific inquiries sent to this address.

TABLE OF EFFECTIVE DATES AND TIME PERIODS—JUNE 2000

This table is used by the Office of the Federal Register to compute certain dates, such as effective dates and comment deadlines, which appear in agency documents. In computing these dates, the day after publication is counted as the first day.

When a date falls on a weekend or holiday, the next Federal business day is used. (See 1 CFR 18.17)

A new table will be published in the first issue of each month.

DATE OF FR PUBLICATION	15 DAYS AFTER PUBLICATION	30 DAYS AFTER PUBLICATION	45 DAYS AFTER PUBLICATION	60 DAYS AFTER PUBLICATION	90 DAYS AFTER PUBLICATION
June 1	June 16	July 3	July 17	July 31	August 30
June 2	June 19	July 3	July 17	August 1	August 31
June 5	June 20	July 5	July 20	August 4	Sept 5
June 6	June 21	July 6	July 21	August 7	Sept 5
June 7	June 22	July 7	July 24	August 7	Sept 5
June 8	June 23	July 10	July 24	August 7	Sept 6
June 9	June 26	July 10	July 24	August 8	Sept 7
June 12	June 27	July 12	July 27	August 11	Sept 11
June 13	June 28	July 13	July 28	August 14	Sept 11
June 14	June 29	July 14	July 31	August 14	Sept 12
June 15	June 30	July 17	July 31	August 14	Sept 13
June 16	July 3	July 17	July 31	August 15	Sept 14
June 19	July 5	July 19	August 3	August 18	Sept 18
June 20	July 5	July 20	August 4	August 21	Sept 18
June 21	July 6	July 21	August 7	August 21	Sept 19
June 22	July 7	July 24	August 7	August 21	Sept 20
June 23	July 10	July 24	August 7	August 22	Sept 21
June 26	July 11	July 26	August 10	August 25	Sept 25
June 27	July 12	July 27	August 11	August 28	Sept 25
June 28	July 13	July 28	August 14	August 28	Sept 26
June 29	July 14	July 31	August 14	August 28	Sept 27
June 30	July 17	July 31	August 14	August 29	Sept 28