AUTHENTICATED
U.S. GOVERNMENT
INFORMATION
GPO

FEDERAL REGISTER

Vol. 77 Friday,
No. 62 March 30, 2012

Pages 19059–19520

OFFICE OF THE FEDERAL REGISTER

The **FEDERAL REGISTER** (ISSN 0097–6326) is published daily, Monday through Friday, except official holidays, by the Office of the Federal Register, National Archives and Records Administration, Washington, DC 20408, under the Federal Register Act (44 U.S.C. Ch. 15) and the regulations of the Administrative Committee of the Federal Register (1 CFR Ch. I). The Superintendent of Documents, U.S. Government Printing Office, Washington, DC 20402 is the exclusive distributor of the official edition. Periodicals postage is paid at Washington, DC.

The **FEDERAL REGISTER** provides a uniform system for making available to the public regulations and legal notices issued by Federal agencies. These include Presidential proclamations and Executive Orders, Federal agency documents having general applicability and legal effect, documents required to be published by act of Congress, and other Federal agency documents of public interest.

Documents are on file for public inspection in the Office of the Federal Register the day before they are published, unless the issuing agency requests earlier filing. For a list of documents currently on file for public inspection, see *www.ofr.gov.*

The seal of the National Archives and Records Administration authenticates the Federal Register as the official serial publication established under the Federal Register Act. Under 44 U.S.C. 1507, the contents of the **Federal Register** shall be judicially noticed.

The **Federal Register** is published in paper and on 24x microfiche. It is also available online at no charge at *www.fdsys.gov*, a service of the U.S. Government Printing Office.

The online edition of the **Federal Register** is issued under the authority of the Administrative Committee of the Federal Register as the official legal equivalent of the paper and microfiche editions (44 U.S.C. 4101 and 1 CFR 5.10). It is updated by 6:00 a.m. each day the **Federal Register** is published and includes both text and graphics from Volume 59, 1 (January 2, 1994) forward. For more information, contact the GPO Customer Contact Center, U.S. Government Printing Office. Phone 202-512-1800 or 866-512-1800 (toll free). E-mail, *gpo@custhelp.com.*

The annual subscription price for the **Federal Register** paper edition is $749 plus postage, or $808, plus postage, for a combined **Federal Register, Federal Register** Index and List of CFR Sections Affected (LSA) subscription; the microfiche edition of the **Federal Register** including the **Federal Register** Index and LSA is $165, plus postage. Six month subscriptions are available for one-half the annual rate. The prevailing postal rates will be applied to orders according to the delivery method requested. The price of a single copy of the daily **Federal Register,** including postage, is based on the number of pages: $11 for an issue containing less than 200 pages; $22 for an issue containing 200 to 400 pages; and $33 for an issue containing more than 400 pages. Single issues of the microfiche edition may be purchased for $3 per copy, including postage. Remit check or money order, made payable to the Superintendent of Documents, or charge to your GPO Deposit Account, VISA, MasterCard, American Express, or Discover. Mail to: U.S. Government Printing Office—New Orders, P.O. Box 979050, St. Louis, MO 63197-9000; or call toll free 1-866-512-1800, DC area 202-512-1800; or go to the U.S. Government Online Bookstore site, see *bookstore.gpo.gov.*

There are no restrictions on the republication of material appearing in the **Federal Register.**

How To Cite This Publication: Use the volume number and the page number. Example: 77 FR 12345.

Postmaster: Send address changes to the Superintendent of Documents, Federal Register, U.S. Government Printing Office, Washington, DC 20402, along with the entire mailing label from the last issue received.

SUBSCRIPTIONS AND COPIES

PUBLIC

Subscriptions:

Paper or fiche	**202–512–1800**
Assistance with public subscriptions	**202–512–1806**

General online information **202–512–1530; 1–888–293–6498**

Single copies/back copies:

Paper or fiche	**202–512–1800**
Assistance with public single copies	**1–866–512–1800 (Toll-Free)**

FEDERAL AGENCIES

Subscriptions:

Paper or fiche	**202–741–6005**
Assistance with Federal agency subscriptions	**202–741–6005**

FEDERAL REGISTER WORKSHOP

THE FEDERAL REGISTER: WHAT IT IS AND HOW TO USE IT

FOR: Any person who uses the Federal Register and Code of Federal Regulations.

WHO: Sponsored by the Office of the Federal Register.

WHAT: Free public briefings (approximately 3 hours) to present:

1. The regulatory process, with a focus on the Federal Register system and the public's role in the development of regulations.
2. The relationship between the Federal Register and Code of Federal Regulations.
3. The important elements of typical Federal Register documents.
4. An introduction to the finding aids of the FR/CFR system.

WHY: To provide the public with access to information necessary to research Federal agency regulations which directly affect them. There will be no discussion of specific agency regulations.

WHEN: Tuesday, April 10, 2012
9 a.m.–12:30 p.m.

WHERE: Office of the Federal Register
Conference Room, Suite 700
800 North Capitol Street, NW.
Washington, DC 20002

RESERVATIONS: (202) 741–6008

Printed on recycled paper.

Contents

Federal Register

Vol. 77, No. 62

Friday, March 30, 2012

Agriculture Department
See Forest Service

Blind or Severely Disabled, Committee for Purchase From People Who Are
See Committee for Purchase From People Who Are Blind or Severely Disabled

Centers for Medicare & Medicaid Services
NOTICES
Renewals of Deeming Authority:
Accreditation Association for Ambulatory Health Care, Inc. for Medicare Advantage Health Maintenance Organizations, etc., 19290–19292
Utilization Review Accreditation Commission for Medicare Advantage Health Maintenance Organizations, etc., 19288–19290

Children and Families Administration
NOTICES
Agency Information Collection Activities; Proposals, Submissions, and Approvals:
Protection and Advocacy Voting Access Annual Report, 19292

Coast Guard
RULES
Security Zones:
USCGC STRATTON Commissioning Ceremony, Alameda, CA, 19095–19098
NOTICES
Charter Renewals:
Prince William Sound Regional Citizens' Advisory Council , 19301–19302
Meetings:
Navigation Safety Advisory Council, 19302–19303

Commerce Department
See Economic Development Administration
See Foreign-Trade Zones Board
See Industry and Security Bureau
See International Trade Administration
See National Institute of Standards and Technology
See National Oceanic and Atmospheric Administration
NOTICES
Agency Information Collection Activities; Proposals, Submissions, and Approvals, 19177–19178

Committee for Purchase From People Who Are Blind or Severely Disabled
NOTICES
Procurement List; Additions, 19262–19263
Procurement List; Proposed Deletions, 19263

Comptroller of the Currency
NOTICES
Proposed Guidance on Leveraged Lending, 19417–19424

Consumer Product Safety Commission
NOTICES
Meetings; Sunshine Act, 19263

Corporation for National and Community Service
NOTICES
Agency Information Collection Activities; Proposals, Submissions, and Approvals, 19263–19264

Defense Acquisition Regulations System
RULES
Defense Federal Acquisition Regulation Supplement; Technical Amendment, 19128
Defense Federal Acquisition Regulation Supplements:
Inflation Adjustment of Threshold for Acquisition of Right-Hand Drive Passenger Sedans, 19127–19128
New Threshold for Peer Reviews of Noncompetitive Contracts, 19126
Repeal of Case-by-Case Reporting, 19132
Separation of Combined Provisions and Clauses, 19128–19131

Defense Department
See Defense Acquisition Regulations System
RULES
Privacy Act; Implementation; Correction, 19095
NOTICES
Agency Information Collection Activities; Proposals, Submissions, and Approvals:
Progress Payments, 19287–19288
Charter Renewals:
Air University Board of Visitors, 19264–19265
Meetings:
National Defense University Board of Visitors, 19265–19266
Privacy Act; Systems of Records, 19266–19267

Department of Transportation
See Pipeline and Hazardous Materials Safety Administration

Drug Enforcement Administration
NOTICES
Decisions and Orders:
Daniel B. Brubaker, D.O., 19322–19338

Economic Development Administration
NOTICES
Agency Information Collection Activities; Proposals, Submissions, and Approvals:
Comprehensive Economic Development Strategy, 19178–19179

Education Department
NOTICES
Agency Information Collection Activities; Proposals, Submissions, and Approvals:
Study of Promising Features of Teacher Preparation Programs; Phase 1—Recruitment, 19267
Applications for New Awards:
Alaska Native and Native Hawaiian-Serving Institutions Program, 19267–19273
Meetings:
National Advisory Committee on Institutional Quality and Integrity, 19273–19275

Employee Benefits Security Administration
NOTICES
Amendments to Proposed Exemptions:
Sammons Enterprises, Inc. Employee Stock Ownership Plan, 19338–19340
Grants of Individual Exemptions:
Certain Prohibited Transaction Restrictions, 19340–19345
Proposed Exemptions from Certain Prohibited Transaction Restrictions, 19345–19357

Energy Department
See Federal Energy Regulatory Commission
NOTICES
Agency Information Collection Activities; Proposals, Submissions, and Approvals, 19275–19277
Grants of Authority to Import and Export Natural Gas and Liquefied Natural Gas:
Freeport LNG Expansion, L.P. and FLNG Liquefaction, LLC, et al., 19277–19278
Meetings:
Nuclear Fuel Cycle Options, 19278

Environmental Protection Agency
RULES
Approval and Promulgation of Implementation Plans:
Kentucky; Regional Haze State Implementation Plan, 19098–19109
Exemptions from the Requirements of Tolerances:
Bacillus pumilus strain GHA 180, 19109–19112
NOTICES
Environmental Impact Statements; Availability, etc.:
Weekly Receipt, 19281–19282
National Pollutant Discharge Elimination System General Permits:
Discharges from the Oil and Gas Extraction Point Source Category to Coastal Waters; Texas, 19282–19284
Proposed CERCLA Administrative Settlements:
George L. Gomez and Patricia A. Gomez, 19284

Equal Employment Opportunity Commission
RULES
Disparate Impact and Reasonable Factors Other Than Age Under the Age Discrimination in Employment Act, 19080–19095

Executive Office of the President
See Management and Budget Office

Federal Aviation Administration
RULES
Airworthiness Directives:
Airbus Airplanes, 19059–19061, 19065–19069, 19071–19074
Dassault Aviation Airplanes, 19074–19076
DG Flugzeugbau GmbH Gliders, 19063–19065
Goodrich Evacuation Systems Approved Under Technical Standard Order TSO–C69b and Installed on Airbus Airplanes, 19069–19071
Pilatus Aircraft Ltd. Airplanes, 19061–19063
Establishment of Class E Airspace:
Marion, AL, 19076
High Density Traffic Airports:
Determination Regarding Low Demand Periods at Ronald Reagan Washington National Airport, 19076–19077
PROPOSED RULES
Special Conditions:
Airbus, A350–900 Series Airplane; Crew Rest Compartments, 19148–19153
NOTICES
Airport Improvement Program Primary, Cargo, and Nonprimary Entitlement Funds for Fiscal Year 2012:
Deadline for Notification of Intent to Use Funds, 19408–19409
Environmental Assessments; Availability, etc.:
Dual Track Airport Project; Brookings Regional Airport in Brookings, SD, 19409–19410
Schedule Information Submission Deadlines:
Winter 2012–2013 Season; O'Hare International Airport, et al., 19410

Federal Communications Commission
RULES
Closed Captioning of Internet Protocol-Delivered Video Programming:
Implementation of the Twenty-First Century Communications and Video Accessibility Act of 2010, 19480–19520
Lifeline and Link Up Reform and Modernization, Advancing Broadband Availability Through Digital Literacy Training, 19125
NOTICES
Agency Information Collection Activities; Proposals, Submissions, and Approvals, 19284–19287

Federal Deposit Insurance Corporation
NOTICES
Proposed Guidance on Leveraged Lending, 19417–19424

Federal Emergency Management Agency
RULES
Final Flood Elevation Determinations, 19112–19125
NOTICES
Agency Information Collection Activities; Proposals, Submissions, and Approvals:
Application for Community Disaster Loan Program, 19303
Major Disaster Declarations:
Indiana; Amendment No. 1, 19303–19304

Federal Energy Regulatory Commission
NOTICES
Applications:
Leaf River Energy Center LLC, 19278–19279
Petitions for Declaratory Orders:
Northern Indiana Public Service Co., 19279
Preliminary Permit Applications:
Long Canyon Pumped Storage Project, 19279–19280
Technical Conferences:
Increasing Real-Time and Day-Ahead Market Efficiency Through Improved Software, 19280–19281

Federal Highway Administration
NOTICES
Buy America Waivers, 19410–19411

Federal Railroad Administration
NOTICES
Petitions for Waivers of Compliance, 19411–19414

Federal Reserve System
NOTICES
Changes in Bank Control:
Acquisitions of Shares of a Bank or Bank Holding Company, 19287
Formations of, Acquisitions by, and Mergers of Bank Holding Companies, 19287

Proposed Guidance on Leveraged Lending, 19417–19424

Fish and Wildlife Service
NOTICES
Environmental Assessments; Availability, etc.:
Benton Lake National Wildlife Refuge Complex, Great Falls, MT, 19309–19311
Permit Applications:
Endangered Species, 19311–19312
Permits:
Endangered Species; Marine Mammals, 19313

Food and Drug Administration
NOTICES
Meetings:
Orthopaedic and Rehabilitation Devices Panel of the Medical Devices Advisory Committee, 19293–19294

Foreign-Trade Zones Board
NOTICES
Approvals of Temporary/Interim Manufacturing Authority:
CNH America, LLC, 19179

Forest Service
NOTICES
Environmental Impact Statements; Availability, etc.:
Beaverhead–Deerlodge National Forest, Jefferson Ranger District, MT, Boulder River Salvage and Vegetation Management Project, 19177

General Services Administration
NOTICES
Agency Information Collection Activities; Proposals, Submissions, and Approvals:
Progress Payments, 19287–19288

Health and Human Services Department
See Centers for Medicare & Medicaid Services
See Children and Families Administration
See Food and Drug Administration
See Health Resources and Services Administration
See National Institutes of Health

Health Resources and Services Administration
NOTICES
Meetings:
National Advisory Council on Migrant Health, 19294–19295
Privacy Act; Systems of Records, 19295–19299

Homeland Security Department
See Coast Guard
See Federal Emergency Management Agency
See U.S. Customs and Border Protection
NOTICES
Meetings:
National Infrastructure Advisory Council, 19300–19301

Housing and Urban Development Department
PROPOSED RULES
Native American Housing Assistance and Self-Determination Reauthorization Act of 2008:
Negotiated Rulemaking Committee Meeting, 19154
NOTICES
Federal Property Suitable as Facilities to Assist the Homeless, 19304–19305
Funding Awards:
Office of Healthy Homes and Lead Hazard Control Grant Programs for Fiscal Year 2010, 19305–19306
Office of Healthy Homes and Lead Hazard Control Grant Programs for Fiscal Year 2011, 19306–19307

Indian Affairs Bureau
NOTICES
Agency Information Collection Activities; Proposals, Submissions, and Approvals, 19313–19315
Agency Information Collection Activities; Proposals, Submissions, and Approvals:
Reindeer in Alaska, 19315
Final Determination Against Federal Acknowledgment of the Central Band of Cherokee, 19315–19317

Industry and Security Bureau
NOTICES
Meetings:
Emerging Technology and Research Advisory Committee, 19179

Interior Department
See Fish and Wildlife Service
See Indian Affairs Bureau
See Land Management Bureau
See National Park Service
See Ocean Energy Management Bureau
NOTICES
Agency Information Collection Activities; Proposals, Submissions, and Approvals:
DOI Programmatic Clearance for Customer Satisfaction Surveys, 19307–19309

Internal Revenue Service
RULES
Estate Tax; Estates of Decedents Dying After August 16, 1954; CFR Correction, 19080
PROPOSED RULES
Allocation and Apportionment of Interest Expense; Hearing Cancellation, 19154–19155

International Trade Administration
NOTICES
Antidumping and Countervailing Duty Administrative Reviews; Results, Extensions, Amendments, etc.:, 19179–19190
Antidumping Duty Administrative Reviews; Results, Extensions, Amendments, etc.:
Certain Steel Nails from the People's Republic of China, 19190–19191
Steel Wire Garment Hangers from the People's Republic of China, 19191–19192
Countervailing Duty Determinations; Results, Extensions, Amendments, etc.:
Circular Welded Carbon-Quality Steel Pipe from India, 19192–19211
Preliminary Affirmative Countervailing Duty Determinations, etc.:
Circular Welded Carbon-Quality Steel Pipe from the Socialist Republic of Vietnam, 19211–19219
Preliminary Negative Countervailing Duty Determinations, etc.:
Circular Welded Carbon-Quality Steel Pipe from the United Arab Emirates, 19219–19224

Justice Department
See Drug Enforcement Administration

Labor Department
See Employee Benefits Security Administration

See Workers Compensation Programs Office

Land Management Bureau
NOTICES
Environmental Impact Statements; Availability, etc.:
National Petroleum Reserve-Alaska; Public Subsistence-Related Hearings, 19318–19319
Record of Decision for Upper Las Vegas Wash Conservation Transfer Area, Las Vegas, NV, 19317–19318
Meetings:
Northwest Colorado Resource Advisory Council, 19319–19320

Management and Budget Office
NOTICES
Federal Participation in Development and Use of Voluntary Consensus Standards, etc., 19357–19360

Millennium Challenge Corporation
NOTICES
Report on Countries That Are Candidates for Millennium Challenge Account Eligibility, etc., 19360–19361

National Aeronautics and Space Administration
NOTICES
Agency Information Collection Activities; Proposals, Submissions, and Approvals:
Progress Payments, 19287–19288

National Highway Traffic Safety Administration
RULES
Federal Motor Vehicle Safety Standards:
Bus Emergency Exits and Window Retention and Release, 19132–19138
PROPOSED RULES
Federal Motor Vehicle Safety Standards:
Seat Belt Assembly Anchorages, 19155–19164

National Institute of Standards and Technology
NOTICES
Meetings:
Advisory Committee on Earthquake Hazards Reduction, 19224–19225

National Institutes of Health
NOTICES
Government-Owned Inventions; Availability for Licensing, 19299–19300

National Oceanic and Atmospheric Administration
RULES
Fisheries of the Exclusive Economic Zone Off Alaska:
Pacific Cod by Catcher Vessels Using Trawl Gear in the Bering Sea and Aleutian Islands Management Area, 19147
Pacific Cod for American Fisheries Act Catcher/Processors Using Trawl Gear in the Bering Sea and Aleutian Islands Management Area, 19144–19145
Pollock in the West Yakutat District in the Gulf of Alaska, 19145–19146
Shallow-Water Species Fishery by Vessels Using Trawl Gear in the Gulf of Alaska, 19146
Fisheries of the Northeastern U.S.:
Northeast Multispecies Fishery Management Plan, Secretarial Amendment, 19138–19144
PROPOSED RULES
Atlantic Highly Migratory Species:
2006 Consolidated Highly Migratory Species Fishery Management Plan; Amendment 4, 19164–19165
2012 Atlantic Bluefin Tuna Quota Specifications, 19175–19176
Fisheries of the Caribbean, Gulf of Mexico, and South Atlantic:
Snapper–Grouper Fishery Off the Southern Atlantic States; Amendment 20A, 19165–19169
Snapper–Grouper Fishery Off the Southern Atlantic States; Amendment 24, 19169–19175
NOTICES
Fishery Conservation Plan and Research Permits for the Washington State Department of Fish and Wildlife; Availability, 19225–19226
Identification of Nations Whose Fishing Vessels are Engaged in Illegal, Unreported, or Unregulated Fishing, 19226–19227
Meetings:
Gulf of Mexico Fishery Management Council, 19227–19228
New England Fishery Management Council, 19228–19229, 19231
South Atlantic Fishery Management Council, 19229–19230
Western Pacific Fishery Management Council, 19230–19231
Takes of Marine Mammals Incidental to Specified Activities:
Low-Energy Marine Geophysical Survey in the Central Pacific Ocean, May through June, 2012, 19242–19262
Navy Training Conducted at the Silver Strand Training Complex, San Diego Bay, 19231–19242

National Park Service
NOTICES
Environmental Impact Statements; Availability, etc.:
Harpers Ferry National Historical Park, 19320–19321

National Science Foundation
NOTICES
Agency Information Collection Activities; Proposals, Submissions, and Approvals, 19361–19362
Meetings:
Proposal Review Panel for Materials Research, 19362

Nuclear Regulatory Commission
NOTICES
Environmental Assessments; Availability, etc.:
Reed College Research Reactor, 19362–19366

Ocean Energy Management Bureau
NOTICES
Environmental Impact Statements; Availability, etc.:
Geological and Geophysical Exploration on the Atlantic Outer Continental Shelf, 19321

Office of Management and Budget
See Management and Budget Office

Personnel Management Office
NOTICES
Excepted Service; Consolidated Listing of Schedules A, B, and C, 19366–19391

Pipeline and Hazardous Materials Safety Administration
NOTICES
Pipeline Safety:
Leak and Valve Studies Mandated by the Pipeline Safety, Regulatory Certainty, and Job Creation Act of 2011, 19414–19416

Postal Service
NOTICES
Proposed Intelligent Mail Indicia Performance Criteria, 19391

Public Debt Bureau
NOTICES
Agency Information Collection Activities; Proposals, Submissions, and Approvals, 19424–19425

Securities and Exchange Commission
RULES
Adoption of Updated EDGAR Filer Manual, 19077–19079
NOTICES
Self-Regulatory Organizations; Proposed Rule Changes:
Chicago Mercantile Exchange, Inc., 19393–19394
EDGA Exchange, Inc., 19391–19393
EDGX Exchange, Inc., 19400–19401
International Securities Exchange, LLC, 19399–19400
NASDAQ Stock Market LLC, 19428–19454
New York Stock Exchange LLC, 19396–19397
NYSE Amex LLC, 19394–19396
NYSE Arca, Inc., 19401–19405 19397–19399

Small Business Administration
NOTICES
Disaster Declarations:
Indiana, 19405
Kentucky; Amendment 1, 19405
West Virginia, 19405–19406

Social Security Administration
RULES
Removal of Regulations on Black Lung Benefits, 19079
PROPOSED RULES
Nonpayment of Benefits to Fugitive Felons and Probation or Parole Violators; Withdrawal, 19153–19154
NOTICES
Agency Information Collection Activities; Proposals, Submissions, and Approvals, 19406–19408
Reinstatment of Index; Correction, 19408

State Department
NOTICES
Meetings:
FY 2013 U.S. Refugee Admissions Program, 19408

Surface Transportation Board
NOTICES
Operation Exemptions:
Affton Terminal Railroad Co. from Affton Trucking Co., 19417

Transportation Department
See Federal Aviation Administration
See Federal Highway Administration
See Federal Railroad Administration
See National Highway Traffic Safety Administration
See Pipeline and Hazardous Materials Safety Administration
See Surface Transportation Board
NOTICES
Meetings:
Dynamic Mobility Applications and Data Capture Management Programs, 19408

Treasury Department
See Comptroller of the Currency
See Internal Revenue Service
See Public Debt Bureau
NOTICES
Agency Information Collection Activities; Proposals, Submissions, and Approvals, 19417

U.S. Customs and Border Protection
NOTICES
Agency Information Collection Activities; Proposals, Submissions, and Approvals:
Guam–CNMI Visa Waiver Information, 19304

Veterans Affairs Department
NOTICES
Prescription Drugs Not Administered During Treatment; Update to Administrative Cost for Calendar Year 2012, 19425–19426

Workers Compensation Programs Office
PROPOSED RULES
Byrd Amendments to the Black Lung Benefits Act:
Determining Coal Miners' and Survivors' Entitlement to Benefits, 19456–19478

Separate Parts In This Issue

Part II
Securities and Exchange Commission, 19428–19454

Part III
Labor Department, Workers Compensation Programs Office, 19456–19478

Part IV
Federal Communications Commission, 19480–19520

Reader Aids

Consult the Reader Aids section at the end of this page for phone numbers, online resources, finding aids, reminders, and notice of recently enacted public laws.

To subscribe to the Federal Register Table of Contents LISTSERV electronic mailing list, go to http://listserv.access.gpo.gov and select Online mailing list archives, FEDREGTOC-L, Join or leave the list (or change settings); then follow the instructions.

CFR PARTS AFFECTED IN THIS ISSUE

A cumulative list of the parts affected this month can be found in the Reader Aids section at the end of this issue.

14 CFR
39 (8 documents) 19059, 19061, 19063, 19065, 19067, 19069, 19071, 19074
71.....19076
93.....19076
Proposed Rules:
25.....19148

17 CFR
232.....19077

20 CFR
410.....19079
Proposed Rules:
404.....19153
416.....19153
718.....19456
725.....19456

24 CFR
Proposed Rules:
1000.....19154

26 CFR
20.....19080
Proposed Rules:
1.....19154

29 CFR
1625.....19080

32 CFR
322.....19095

33 CFR
165.....19095

40 CFR
52.....19098
180.....19109

44 CFR
67.....19112

47 CFR
15.....19480
54.....19125
79.....19480

48 CFR
201 (2 documents) 19126, 19127
203.....19128
204.....19128
209.....19128
212.....19127
216 (2 documents) 19128, 19132
229.....19128
252.....19128

49 CFR
571.....19132
Proposed Rules:
571.....19155

50 CFR
648.....19138
679 (4 documents) 19144, 19145, 19146, 19147
Proposed Rules:
600.....19164
622 (2 documents) 19165, 19169
635 (2 documents) 19164, 19175

Rules and Regulations

Federal Register
Vol. 77, No. 62
Friday, March 30, 2012

This section of the FEDERAL REGISTER contains regulatory documents having general applicability and legal effect, most of which are keyed to and codified in the Code of Federal Regulations, which is published under 50 titles pursuant to 44 U.S.C. 1510.

The Code of Federal Regulations is sold by the Superintendent of Documents. Prices of new books are listed in the first FEDERAL REGISTER issue of each week.

DEPARTMENT OF TRANSPORTATION

Federal Aviation Administration

14 CFR Part 39

[Docket No. FAA–2012–0297; Directorate Identifier 2011–NM–093–AD; Amendment 39–17003; AD 2012–06–22]

RIN 2120–AA64

Airworthiness Directives; Airbus Airplanes

AGENCY: Federal Aviation Administration (FAA), Department of Transportation (DOT).

ACTION: Final rule; request for comments.

SUMMARY: We are adopting a new airworthiness directive (AD) for all Airbus Model A340–500 and Model –600 series airplanes. This AD requires performing repetitive high frequency eddy current inspections of the external radius on upper horizontal cruciform fitting at frame (FR) 47 on the left- and right-hand sides for cracks, and repairing the cracks if necessary. This AD was prompted by reports that during fatigue testing, damages occurred in the external radius on the upper horizontal cruciform fitting at FR47 on the left- and right-hand sides. We are issuing this AD to detect and correct fatigue cracking, which could adversely affect the structural integrity of the airplane.

DATES: This AD becomes effective April 16, 2012.

The Director of the Federal Register approved the incorporation by reference of the service information listed in the AD as of April 16, 2012.

We must receive comments on this AD by May 14, 2012.

ADDRESSES: You may send comments by any of the following methods:

- *Federal eRulemaking Portal:* Go to *http://www.regulations.gov.* Follow the instructions for submitting comments.
- *Fax:* (202) 493–2251.
- *Mail:* U.S. Department of Transportation, Docket Operations, M–30, West Building Ground Floor, Room W12–140, 1200 New Jersey Avenue SE., Washington, DC 20590.
- *Hand Delivery:* U.S. Department of Transportation, Docket Operations, M–30, West Building Ground Floor, Room W12–140, 1200 New Jersey Avenue SE., Washington, DC, between 9 a.m. and 5 p.m., Monday through Friday, except Federal holidays.

Examining the AD Docket

You may examine the AD docket on the Internet at *http://www.regulations.gov;* or in person at the Docket Operations office between 9 a.m. and 5 p.m., Monday through Friday, except Federal holidays. The AD docket contains this AD, the regulatory evaluation, any comments received, and other information. The street address for the Docket Operations office (telephone (800) 647–5527) is in the **ADDRESSES** section. Comments will be available in the AD docket shortly after receipt.

FOR FURTHER INFORMATION CONTACT: Vladimir Ulyanov, Aerospace Engineer, International Branch, ANM–116, Transport Airplane Directorate, FAA, 1601 Lind Avenue SW., Renton, Washington 98057–3356; telephone (425) 227–1138; fax (425) 227–1149.

SUPPLEMENTARY INFORMATION:

Discussion

The European Aviation Safety Agency (EASA), which is the Technical Agent for the Member States of the European Community, has issued EASA Airworthiness Directive 2011–0075, dated April 29, 2011 (referred to after this as ''the MCAI''), to correct an unsafe condition for the specified products. The MCAI states:

> During the A340–600 EF2 fatigue test, damages occurred in external radius on upper horizontal cruciform in rear corner at FR47 respectively on Right-Hand-(RH) side and on Left-Hand-(LH) side. These damages were detected after tear down inspections using High Frequency Eddy Current method.
>
> This condition, if not corrected, could impair the structural integrity of the aeroplane.
>
> For the reasons described above, this [EASA] AD requires to perform repetitive Special Detailed Inspections for early detection of cracks on upper horizontal cruciform fitting at FR47 on LH and RH sides, and the accomplishment of corrective actions [repair], as applicable.

You may obtain further information by examining the MCAI in the AD docket.

Relevant Service Information

Airbus has issued Mandatory Service Bulletin A340–57–5029, including Appendices 01 and 02, dated February 25, 2011.

For the initial inspection, the compliance time ranges between 4,450 total flight cycles or 35,600 total flight hours and 9,750 total flight cycles or 63,600 total flight hours, whichever occurs first, depending on airplane configuration. For the repetitive intervals, the compliance time ranges between 2,350 flight cycles or 19,000 flight hours, whichever occurs first; and 6,050 flight cycles or 46,200 flight hours, whichever occurs first, depending on airplane configuration.

The actions described in this service information are intended to correct the unsafe condition identified in the MCAI.

FAA's Determination and Requirements of This AD

This product has been approved by the aviation authority of another country, and is approved for operation in the United States. Pursuant to our bilateral agreement with the State of Design Authority, we have been notified of the unsafe condition described in the MCAI and service information referenced above. We are issuing this AD because we evaluated all pertinent information and determined the unsafe condition exists and is likely to exist or develop on other products of the same type design.

There are no products of this type currently registered in the United States. However, this rule is necessary to ensure that the described unsafe condition is addressed if any of these products are placed on the U.S. Register in the future.

FAA's Determination of the Effective Date

Since there are currently no domestic operators of this product, notice and opportunity for public comment before issuing this AD are unnecessary.

Comments Invited

This AD is a final rule that involves requirements affecting flight safety, and we did not precede it by notice and opportunity for public comment. We invite you to send any written relevant

data, views, or arguments about this AD. Send your comments to an address listed under the **ADDRESSES** section. Include ''Docket No. FAA–2012–0297; Directorate Identifier 2011–NM–093–AD'' at the beginning of your comments. We specifically invite comments on the overall regulatory, economic, environmental, and energy aspects of this AD. We will consider all comments received by the closing date and may amend this AD because of those comments.

We will post all comments we receive, without change, to *http://www.regulations.gov,* including any personal information you provide. We will also post a report summarizing each substantive verbal contact we receive about this AD.

Authority for This Rulemaking

Title 49 of the United States Code specifies the FAA's authority to issue rules on aviation safety. Subtitle I, section 106, describes the authority of the FAA Administrator. ''Subtitle VII: Aviation Programs,'' describes in more detail the scope of the Agency's authority.

We are issuing this rulemaking under the authority described in ''Subtitle VII, Part A, Subpart III, Section 44701: General requirements.'' Under that section, Congress charges the FAA with promoting safe flight of civil aircraft in air commerce by prescribing regulations for practices, methods, and procedures the Administrator finds necessary for safety in air commerce. This regulation is within the scope of that authority because it addresses an unsafe condition that is likely to exist or develop on products identified in this rulemaking action.

Regulatory Findings

We determined that this AD will not have federalism implications under Executive Order 13132. This AD will not have a substantial direct effect on the States, on the relationship between the national government and the States, or on the distribution of power and responsibilities among the various levels of government.

For the reasons discussed above, I certify that this AD:

1. Is not a ''significant regulatory action'' under Executive Order 12866;

2. Is not a ''significant rule'' under the DOT Regulatory Policies and Procedures (44 FR 11034, February 26, 1979);

3. Will not affect intrastate aviation in Alaska; and

4. Will not have a significant economic impact, positive or negative, on a substantial number of small entities under the criteria of the Regulatory Flexibility Act.

We prepared a regulatory evaluation of the estimated costs to comply with this AD and placed it in the AD docket.

List of Subjects in 14 CFR Part 39

Air transportation, Aircraft, Aviation safety, Incorporation by reference, Safety.

Adoption of the Amendment

Accordingly, under the authority delegated to me by the Administrator, the FAA amends 14 CFR part 39 as follows:

PART 39—AIRWORTHINESS DIRECTIVES

■ 1. The authority citation for part 39 continues to read as follows:

Authority: 49 U.S.C. 106(g), 40113, 44701.

§ 39.13 [Amended]

■ 2. The FAA amends § 39.13 by adding the following new AD:

2012–06–22 Airbus: Amendment 39–17003. Docket No. FAA–2012–0297; Directorate Identifier 2011–NM–093–AD.

(a) Effective Date

This airworthiness directive (AD) becomes effective April 16, 2012.

(b) Affected ADs

None.

(c) Applicability

This AD applies to Airbus Model A340–541 and –642 airplanes, certificated in any category, all manufacturer serial numbers.

(d) Subject

Air Transport Association (ATA) of America Code 57: Wings.

(e) Reason

This AD was prompted by reports that during fatigue testing, damages occurred in the external radius on the upper horizontal cruciform fitting at frame (FR) 47 on the left- and right-hand sides. We are issuing this AD to detect and correct fatigue cracking, which could adversely affect the structural integrity of the airplane.

(f) Compliance

You are responsible for having the actions required by this AD performed within the compliance times specified, unless the actions have already been done.

(g) Inspection

Before the accumulation of the applicable threshold specified in paragraph 1.E. Compliance, Table 2, of Airbus Mandatory Service Bulletin A340–57–5029, including Appendices 01 and 02, dated February 25, 2011, or within 90 days after the effective date of this AD, whichever occurs later: Do a high frequency eddy current inspection of the external radius on upper horizontal cruciform fitting at FR47 on the left- and right-hand sides for cracks, in accordance with the Accomplishment Instructions of Airbus Mandatory Service Bulletin A340–57–5029, including Appendices 01 and 02, dated February 25, 2011. Where the ''Threshold'' column of Table 2, specified in paragraph 1.E., ''Compliance,'' of Airbus Mandatory Service Bulletin A340–57–5029, including Appendices 01 and 02, dated February 25, 2011, specifies the compliance time as ''FC'' and ''FH,'' this AD requires the compliance times as ''total flight cycles'' and ''total flight hours.'' The thresholds for airplane post-modification number 56558S19405 must be counted from the airplane's first flight and not from the accomplishment of Airbus Service Bulletin A340–57–5010.

(h) Repetitive Inspections

Repeat the inspection required by paragraph (g) of this AD at intervals not to exceed the times specified in the ''Repetitive Interval'' column of Table 2, specified in paragraph 1.E. Compliance, of Airbus Mandatory Service Bulletin A340–57–5029, including Appendices 01 and 02, dated February 25, 2011. Where the ''Repetitive Interval'' column of Table 2, specified in paragraph 1.E. Compliance, of Airbus Mandatory Service Bulletin A340–57–5029, including Appendices 01 and 02, dated February 25, 2011, specifies the compliance times as ''FC'' and ''FH,'' this AD requires the compliance times as ''flight cycles'' and ''flight hours.''

(i) Corrective Action

If any crack is found during the initial or repetitive inspections required by paragraphs (g) and (h) of this AD: Before further flight, contact the Manager, International Branch, ANM–116, FAA; or the European Aviation Safety Agency (EASA) (or its delegated agent); for repair instructions and do the repair.

(j) Reporting Requirement

Submit a report of the findings (both positive and negative) of the inspections required by paragraphs (g) and (h) of this AD, in accordance with the Inspection Report of Airbus Mandatory Service Bulletin A340–57–5029, Appendix 01, dated February 25, 2011, at the applicable time specified in paragraph (j)(1) or (j)(2) of this AD.

(1) If the inspection was done on or after the effective date of this AD: Submit the report within 90 days after the inspection.

(2) If the inspection was done before the effective date of this AD: Submit the report within 90 days after the effective date of this AD.

(k) Credit for Previous Actions

This paragraph provides credit for inspections required by paragraph (g) of this AD, if those inspections were performed before the effective date of this AD using Airbus A340–500/–600 Nondestructive Testing Manual Task 57–18–07, Revision 35, dated April 1, 2011. As of the effective date of this AD, inspections must be repeated in accordance with the requirements of paragraph (h) of this AD.

(l) Other FAA AD Provisions

The following provisions also apply to this AD:

(1) *Alternative Methods of Compliance (AMOCs):* The Manager, International Branch, ANM–116, FAA, has the authority to approve AMOCs for this AD, if requested using the procedures found in 14 CFR 39.19. In accordance with 14 CFR 39.19, send your request to your principal inspector or local Flight Standards District Office, as appropriate. If sending information directly to the International Branch, send it to ATTN: Vladimir Ulyanov, Aerospace Engineer, International Branch, ANM–116, Transport Airplane Directorate, FAA, 1601 Lind Avenue SW., Renton, Washington 98057–3356; telephone (425) 227–1138; fax (425) 227–1149. Information may be emailed to: *9-ANM-116-AMOC-REQUESTS@faa.gov*. Before using any approved AMOC, notify your appropriate principal inspector, or lacking a principal inspector, the manager of the local flight standards district office/certificate holding district office. The AMOC approval letter must specifically reference this AD.

(2) *Airworthy Product:* For any requirement in this AD to obtain corrective actions from a manufacturer or other source, use these actions if they are FAA-approved. Corrective actions are considered FAA-approved if they are approved by the State of Design Authority (or their delegated agent). You are required to assure the product is airworthy before it is returned to service.

(3) *Reporting Requirements:* A federal agency may not conduct or sponsor, and a person is not required to respond to, nor shall a person be subject to a penalty for failure to comply with a collection of information subject to the requirements of the Paperwork Reduction Act unless that collection of information displays a current valid OMB Control Number. The OMB Control Number for this information collection is 2120–0056. Public reporting for this collection of information is estimated to be approximately 5 minutes per response, including the time for reviewing instructions, completing and reviewing the collection of information. All responses to this collection of information are mandatory. Comments concerning the accuracy of this burden and suggestions for reducing the burden should be directed to the FAA at: 800 Independence Ave. SW., Washington, DC 20591, Attn: Information Collection Clearance Officer, AES–200.

(4) *Special Flight Permits:* Special flight permits, as described in Section 21.197 and Section 21.199 of the Federal Aviation Regulations (14 CFR 21.197 and 21.199), are not allowed.

(m) Related Information

Refer to Mandatory Continuing Airworthiness Information (MCAI) EASA Airworthiness Directive 2011–0075, dated April 29, 2011; and Airbus Mandatory Service Bulletin A340–57–5029, including Appendices 01 and 02, dated February 25, 2011; for related information.

(n) Material Incorporated by Reference

(1) You must use the following service information to do the actions required by this AD, unless the AD specifies otherwise. The Director of the Federal Register approved the incorporation by reference (IBR) of the following service information under 5 U.S.C. 552(a) and 1 CFR part 51:

(i) Airbus Mandatory Service Bulletin A340–57–5029, including Appendices 01 and 02, dated February 25, 2011.

(2) For Airbus service information identified in this AD, contact Airbus SAS—Airworthiness Office—EAL, 1 Rond Point Maurice Bellonte, 31707 Blagnac Cedex, France; telephone +33 5 61 93 36 96; fax +33 5 61 93 45 80; email *airworthiness.A330-A340@airbus.com;* Internet *http://www.airbus.com*.

(3) You may review copies of the service information at the FAA, Transport Airplane Directorate, 1601 Lind Avenue SW., Renton, Washington. For information on the availability of this material at the FAA, call 425–227–1221.

(4) You may also review copies of the service information that is incorporated by reference at the National Archives and Records Administration (NARA). For information on the availability of this material at an NARA facility, call 202–741–6030, or go to *http://www.archives.gov/federal_register/code_of_federal_regulations/ibr_locations.html*.

Issued in Renton, Washington, on March 19, 2012.

Ali Bahrami,

Manager, Transport Airplane Directorate, Aircraft Certification Service.

[FR Doc. 2012–7374 Filed 3–29–12; 8:45 am]

BILLING CODE 4910–13–P

DEPARTMENT OF TRANSPORTATION

Federal Aviation Administration

14 CFR Part 39

[Docket No. FAA–2012–0018; Directorate Identifier 2011–CE–042–AD; Amendment 39–16997; AD 2012–06–16]

RIN 2120–AA64

Airworthiness Directives; Pilatus Aircraft Ltd. Airplanes

AGENCY: Federal Aviation Administration (FAA), Department of Transportation (DOT).

ACTION: Final rule.

SUMMARY: We are adopting a new airworthiness directive (AD) for Pilatus Aircraft Ltd. Models PC–6, PC–6–H1, PC–6–H2, PC–6/350, PC–6/350–H1, PC–6/350–H2, PC–6/A, PC–6/A–H1, PC–6/A–H2, PC–6/B–H2, PC–6/B1–H2, PC–6/B2–H2, PC–6/B2–H4, PC–6/C–H2, and PC–6/C1–H2 airplanes. This AD results from mandatory continuing airworthiness information (MCAI) issued by an aviation authority of another country to identify and correct an unsafe condition on an aviation product. The MCAI describes the unsafe condition as loose elevator and rudder hinge bolts caused by incorrect torquing and locking of the bolts, which could lead to in-flight failure of the elevator or rudder attachment. We are issuing this AD to require actions to address the unsafe condition on these products.

DATES: This AD is effective May 4, 2012.

The Director of the Federal Register approved the incorporation by reference of a certain publication listed in the AD as of May 4, 2012.

ADDRESSES: You may examine the AD docket on the Internet at *http://www.regulations.gov* or in person at Document Management Facility, U.S. Department of Transportation, Docket Operations, M–30, West Building Ground Floor, Room W12–140, 1200 New Jersey Avenue SE., Washington, DC 20590.

For service information identified in this AD, contact PILATUS AIRCRAFT LTD., Customer Liaison Manager, CH–6371 STANS, Switzerland; telephone: +41 (0) 41 619 65 80; fax: +41 (0) 41 619 65 76; Internet: *http://www.pilatus-aircraft.com.* You may review copies of the referenced service information at the FAA, Small Airplane Directorate, 901 Locust, Kansas City, Missouri 64106. For information on the availability of this material at the FAA, call (816) 329–4148.

FOR FURTHER INFORMATION CONTACT: Doug Rudolph, Aerospace Engineer, FAA, Small Airplane Directorate, 901 Locust, Room 301, Kansas City, Missouri 64106; telephone: (816) 329–4059; fax: (816) 329–4090; email: *doug.rudolph@faa.gov.*

SUPPLEMENTARY INFORMATION:

Discussion

We issued a notice of proposed rulemaking (NPRM) to amend 14 CFR part 39 to include an AD that would apply to the specified products. That NPRM was published in the **Federal Register** on January 17, 2012 (77 FR 2238). That NPRM proposed to correct an unsafe condition for the specified products. The MCAI states:

> A case of loss of elevator and rudder hinge bolts on a PC–6 aeroplane has been reported.
>
> The results of the investigations indicate that the elevator and rudder hinge bolt loss are suspected to have been caused by an incorrect torque and locking of the bolts.
>
> This condition, if not detected and corrected, could lead to in-flight failure of the elevator or rudder attachment, possibly resulting in loss of control of the aeroplane.
>
> For the reasons described above, this AD requires the installation of a new locking screw and the modification of the installation of the hinge bolt.

You may obtain further information by examining the MCAI in the AD docket.

Comments

We gave the public the opportunity to participate in developing this AD. We received no comments on the NPRM (77 FR 2238, January 17, 2012) or on the determination of the cost to the public.

Conclusion

We reviewed the relevant data and determined that air safety and the public interest require adopting the AD as proposed except for minor editorial changes. We have determined that these minor changes:

- Are consistent with the intent that was proposed in the NPRM (77 FR 2238, January 17, 2012) for correcting the unsafe condition; and
- Do not add any additional burden upon the public than was already proposed in the NPRM (77 FR 2238, January 17, 2012).

Costs of Compliance

We estimate that this AD will affect 50 products of U.S. registry. We also estimate that it will take about 5 work-hours per product to comply with the basic requirements of this AD. The average labor rate is $85 per work-hour. Required parts will cost about $100 per product.

Based on these figures, we estimate the cost of this AD on U.S. operators to be $26,250, or $525 per product.

Authority for This Rulemaking

Title 49 of the United States Code specifies the FAA's authority to issue rules on aviation safety. Subtitle I, section 106, describes the authority of the FAA Administrator. ''Subtitle VII: Aviation Programs,'' describes in more detail the scope of the Agency's authority.

We are issuing this rulemaking under the authority described in ''Subtitle VII, Part A, Subpart III, Section 44701: General requirements.'' Under that section, Congress charges the FAA with promoting safe flight of civil aircraft in air commerce by prescribing regulations for practices, methods, and procedures the Administrator finds necessary for safety in air commerce. This regulation is within the scope of that authority because it addresses an unsafe condition that is likely to exist or develop on products identified in this rulemaking action.

Regulatory Findings

We determined that this AD will not have federalism implications under Executive Order 13132. This AD will not have a substantial direct effect on the States, on the relationship between the national government and the States, or on the distribution of power and responsibilities among the various levels of government.

For the reasons discussed above, I certify this AD:

(1) Is not a ''significant regulatory action'' under Executive Order 12866,

(2) Is not a ''significant rule'' under the DOT Regulatory Policies and Procedures (44 FR 11034, February 26, 1979),

(3) Will not affect intrastate aviation in Alaska, and

(4) Will not have a significant economic impact, positive or negative, on a substantial number of small entities under the criteria of the Regulatory Flexibility Act.

Examining the AD Docket

You may examine the AD docket on the Internet at *http://www.regulations.gov;* or in person at the Docket Management Facility between 9 a.m. and 5 p.m., Monday through Friday, except Federal holidays. The AD docket contains the NPRM (77 FR 2238, January 17, 2012), the regulatory evaluation, any comments received, and other information. The street address for the Docket Office (telephone (800) 647–5527) is in the **ADDRESSES** section. Comments will be available in the AD docket shortly after receipt.

List of Subjects in 14 CFR Part 39

Air transportation, Aircraft, Aviation safety, Incorporation by reference, Safety.

Adoption of the Amendment

Accordingly, under the authority delegated to me by the Administrator, the FAA amends 14 CFR part 39 as follows:

PART 39—AIRWORTHINESS DIRECTIVES

■ 1. The authority citation for part 39 continues to read as follows:

Authority: 49 U.S.C. 106(g), 40113, 44701.

§ 39.13 [Amended]

■ 2. The FAA amends § 39.13 by adding the following new AD:

2012–06–16 Pilatus Aircraft Ltd.: Amendment 39–16997; Docket No. FAA–2012–0018; Directorate Identifier 2011–CE–042–AD.

(a) Effective Date

This airworthiness directive (AD) becomes effective May 4, 2012.

(b) Affected ADs

None.

(c) Applicability

This AD applies to Pilatus Aircraft Ltd. Models PC–6, PC–6–Hl, PC–6–H2, PC–6/350, PC–6/350–Hl, PC–6/350–H2, PC–6/A, PC–6/A–Hl, PC–6/A–H2, PC–6/B–H2, PC–6/Bl-H2, PC–6/B2–H2, PC–6/B2–H4, PC–6/C–H2, and PC–6/Cl-H2 airplanes, all Pilatus manufacturer serial numbers (MSN), and MSN 2001 through 2092, certificated in any category.

Note 1 to paragraph (c) of this AD: For MSN 2001–2092, these airplanes are also identified as Fairchild Republic Company PC–6 airplanes, Fairchild Industries PC–6 airplanes, Fairchild Heli Porter PC–6 airplanes, or Fairchild-Hiller Corporation PC–6 airplanes.

(d) Subject

Air Transport Association of America (ATA) Code 55: Stabilizer.

(e) Reason

This AD was prompted mandatory continuing airworthiness information (MCAI) issued by an aviation authority of another country to identify and correct an unsafe condition on an aviation product. The MCAI describes the unsafe condition as loose elevator and rudder hinge bolts caused by incorrect torquing and locking of the bolts. We are issuing this AD to prevent in-flight failure of the elevator or rudder attachment, which could result in loss of control of the airplane.

(f) Actions and Compliance

Unless already done, do the following actions:

(1) *For airplanes that have not been modified before May 4, 2012 (the effective date of this AD) following Pilatus Aircraft Ltd. PC–6 Service Bulletin No. 55–001 at initial issue,* within 2 months after May 4, 2012 (the effective date of this AD), install new elevator and rudder hinge bolt locking screws and modify the installation of the hinge bolt following the Accomplishment Instructions in Pilatus Aircraft Ltd. PC–6 Service Bulletin No. 55–001, Rev. No. 1, dated November 25, 2011.

(2) *For airplanes that have been modified before May 4, 2012 (the effective date of this AD) following Pilatus Aircraft Ltd. PC–6 Service Bulletin No. 55–001 at initial issue,* within 6 months after May 4, 2012 (the effective date of this AD), install new elevator and rudder hinge bolt locking screws following the Accomplishment Instruction of Pilatus Aircraft Ltd. PC–6 Service Bulletin No. 55–001, Rev. No. 1, dated November 25, 2011.

(g) Other FAA AD Provisions

The following provisions also apply to this AD:

(1) *Alternative Methods of Compliance (AMOCs):* The Manager, Standards Office, FAA, has the authority to approve AMOCs for this AD, if requested using the procedures found in 14 CFR 39.19. Send information to ATTN: Doug Rudolph, Aerospace Engineer, FAA, Small Airplane Directorate, 901 Locust, Room 301, Kansas City, Missouri 64106; telephone: (816) 329–4059; fax: (816) 329–4090; email: *doug.rudolph@faa.gov.* Before

using any approved AMOC on any airplane to which the AMOC applies, notify your appropriate principal inspector (PI) in the FAA Flight Standards District Office (FSDO), or lacking a PI, your local FSDO.

(2) *Airworthy Product:* For any requirement in this AD to obtain corrective actions from a manufacturer or other source, use these actions if they are FAA-approved. Corrective actions are considered FAA-approved if they are approved by the State of Design Authority (or their delegated agent). You are required to assure the product is airworthy before it is returned to service.

(3) *Reporting Requirements:* For any reporting requirement in this AD, a federal agency may not conduct or sponsor, and a person is not required to respond to, nor shall a person be subject to a penalty for failure to comply with a collection of information subject to the requirements of the Paperwork Reduction Act unless that collection of information displays a current valid OMB Control Number. The OMB Control Number for this information collection is 2120–0056. Public reporting for this collection of information is estimated to be approximately 5 minutes per response, including the time for reviewing instructions, completing and reviewing the collection of information. All responses to this collection of information are mandatory. Comments concerning the accuracy of this burden and suggestions for reducing the burden should be directed to the FAA at: 800 Independence Ave. SW., Washington, DC 20591, Attn: Information Collection Clearance Officer, AES–200.

(h) Related Information

Refer to MCAI European Aviation Safety Agency (EASA) AD No. 2011–0230, dated December 9, 2011, and Pilatus Aircraft Ltd. PC–6 Service Bulletin No. 55–001, Rev. No. 1, dated November 25, 2011, for related information.

(i) Material Incorporated by Reference

(1) You must use Pilatus Aircraft Ltd. PC–6 Service Bulletin No. 55–001, Rev. No. 1, dated November 25, 2011, to do the actions required by this AD, unless the AD specifies otherwise. The Director of the Federal Register approved the incorporation by reference (IBR) under 5 U.S.C. 552(a) and 1 CFR part 51.

(2) For service information identified in this AD, contact PILATUS AIRCRAFT LTD., Customer Liaison Manager, CH–6371 STANS, Switzerland; telephone: +41 (0) 41 619 65 80; fax: +41 (0) 41 619 65 76; Internet: *http://www.pilatus-aircraft.com.*

(3) You may review copies of the referenced service information at the FAA, Small Airplane Directorate, 901 Locust, Kansas City, Missouri 64106. For information on the availability of this material at the FAA, call (816) 329–4148.

(4) You may also review copies of the service information that is incorporated by reference at the National Archives and Records Administration (NARA). For information on the availability of this material at an NARA facility, call 202–741–6030, or go to *http://www.archives.gov/federal_register/code_of_federal_regulations/ibr_locations.html.*

Issued in Kansas City, Missouri, on March 19, 2012.

Earl Lawrence,

Manager, Small Airplane Directorate, Aircraft Certification Service.

[FR Doc. 2012–6999 Filed 3–29–12; 8:45 am]

BILLING CODE 4910–13–P

DEPARTMENT OF TRANSPORTATION

Federal Aviation Administration

14 CFR Part 39

[Docket No. FAA–2012–0017; Directorate Identifier 2011–CE–039–AD; Amendment 39–16994; AD 2012–06–13]

RIN 2120–AA64

Airworthiness Directives; DG Flugzeugbau GmbH Gliders

AGENCY: Federal Aviation Administration (FAA), Department of Transportation (DOT).

ACTION: Final rule.

SUMMARY: We are adopting a new airworthiness directive (AD) for DG Flugzeugbau GmbH Models DG–500 Elan Orion, DG–500 Elan Trainer, DG–500/20 Elan, DG–500/22 Elan, DG–500M, and DG–500MB gliders. This AD results from mandatory continuing airworthiness information (MCAI) issued by an aviation authority of another country to identify and correct an unsafe condition on an aviation product. The MCAI describes the unsafe condition as damage to the bulkhead of the glider's center of gravity (CG) tow hook that, if not detected and corrected, may lead to failure of the fiberglass structure during a winch launch. We are issuing this AD to require actions to address the unsafe condition on these products.

DATES: This AD is effective May 4, 2012.

The Director of the Federal Register approved the incorporation by reference of certain publications listed in the AD as of May 4, 2012.

ADDRESSES: You may examine the AD docket on the Internet at *http://www.regulations.gov* or in person at Document Management Facility, U.S. Department of Transportation, Docket Operations, M–30, West Building Ground Floor, Room W12–140, 1200 New Jersey Avenue SE., Washington, DC 20590.

For service information identified in this AD, contact DG-Flugzeugbau GmbH, Otto-Lilienthal-Weg 2, 76646 Bruchsal, Federal Republic of Germany; telephone: +49 (0) 7251 3020140, fax: +49 (0) 7251 3020149; email: *dirks@dg-flugzeugbau.de;* Internet: *www.dg-flugzeugbau.de.* You may review copies of the referenced service information at the FAA, Small Airplane Directorate, 901 Locust St., Kansas City, Missouri 64106. For information on the availability of this material at the FAA, call (816) 329–4148.

FOR FURTHER INFORMATION CONTACT: Jim Rutherford, Aerospace Engineer, FAA, Small Airplane Directorate, 901 Locust St., Room 301, Kansas City, Missouri 64106; telephone: (816) 329–4165; fax: (816) 329–4090; email: *jim.rutherford@faa.gov.*

SUPPLEMENTARY INFORMATION:

Discussion

We issued a notice of proposed rulemaking (NPRM) to amend 14 CFR part 39 to include an AD that would apply to the specified products. That NPRM was published in the **Federal Register** on January 17, 2012 (77 FR 2234). That NPRM proposed to correct an unsafe condition for the specified products. The MCAI states:

> Occurrence of damage of the bulkhead of CG tow hook and its glued joints to fuselage shell was reported.
>
> Investigation concluded that this damage may occur after wheel up landing.
>
> Damage of bulkheads for CG tow hook of the sailplane or powered sailplane, if not detected and corrected, may lead to failure of glass fibre structure during a winch launch.
>
> DG-Flugzeugbau GmbH developed and published Technical Note (TN) No 500/04 with the associated Working Instruction No. 1 to detect and correct damaged CG tow hook bulkhead and its glued joints.
>
> For the above-mentioned reasons, this AD requires a one-time inspection of the CG tow hook and its reinforcement.

You may obtain further information by examining the MCAI in the AD docket.

Comments

We gave the public the opportunity to participate in developing this AD. We received no comments on the NPRM (77 FR 2234, January 17, 2012) or on the determination of the cost to the public.

Conclusion

We reviewed the relevant data and determined that air safety and the public interest require adopting the AD as proposed except for minor editorial changes. We have determined that these minor changes:

- Are consistent with the intent that was proposed in the NPRM (77 FR 2234, January 17, 2012) for correcting the unsafe condition; and
- Do not add any additional burden upon the public than was already proposed in the NPRM (77 FR 2234, January 17, 2012).

The MCAI requires you to inspect the CG tow hook bulkhead for damage and reinforce the bulkhead.

Costs of Compliance

We estimate that this AD will affect 16 products of U.S. registry. We also estimate that it will take about 5 work-hours per product to comply with the basic requirements of this AD. The average labor rate is $85 per work-hour. Required parts will cost about $1,030 per product.

Based on these figures, we estimate the cost of the AD on U.S. operators to be $23,280, or $1,455 per product.

Authority for This Rulemaking

Title 49 of the United States Code specifies the FAA's authority to issue rules on aviation safety. Subtitle I, section 106, describes the authority of the FAA Administrator. ''Subtitle VII: Aviation Programs,'' describes in more detail the scope of the Agency's authority.

We are issuing this rulemaking under the authority described in ''Subtitle VII, Part A, Subpart III, Section 44701: General requirements.'' Under that section, Congress charges the FAA with promoting safe flight of civil aircraft in air commerce by prescribing regulations for practices, methods, and procedures the Administrator finds necessary for safety in air commerce. This regulation is within the scope of that authority because it addresses an unsafe condition that is likely to exist or develop on products identified in this rulemaking action.

Regulatory Findings

We determined that this AD will not have federalism implications under Executive Order 13132. This AD will not have a substantial direct effect on the States, on the relationship between the national government and the States, or on the distribution of power and responsibilities among the various levels of government.

For the reasons discussed above, I certify this AD:

(1) Is not a ''significant regulatory action'' under Executive Order 12866,

(2) Is not a ''significant rule'' under the DOT Regulatory Policies and Procedures (44 FR 11034, February 26, 1979),

(3) Will not affect intrastate aviation in Alaska, and

(4) Will not have a significant economic impact, positive or negative, on a substantial number of small entities under the criteria of the Regulatory Flexibility Act.

Examining the AD Docket

You may examine the AD docket on the Internet at *http://www.regulations.gov;* or in person at the Docket Management Facility between 9 a.m. and 5 p.m., Monday through Friday, except Federal holidays. The AD docket contains the NPRM (77 FR 2234, January 17, 2012), the regulatory evaluation, any comments received, and other information. The street address for the Docket Office (telephone (800) 647–5527) is in the **ADDRESSES** section. Comments will be available in the AD docket shortly after receipt.

List of Subjects in 14 CFR Part 39

Air transportation, Aircraft, Aviation safety, Incorporation by reference, Safety.

Adoption of the Amendment

Accordingly, under the authority delegated to me by the Administrator, the FAA amends 14 CFR part 39 as follows:

PART 39—AIRWORTHINESS DIRECTIVES

■ 1. The authority citation for part 39 continues to read as follows:

Authority: 49 U.S.C. 106(g), 40113, 44701.

§ 39.13 [Amended]

■ 2. The FAA amends § 39.13 by adding the following new AD:

2012–06–13 DG Flugzeugbau GmbH: Amendment 39–16994; Docket No. FAA–2012–0017; Directorate Identifier 2011–CE–039–AD.

(a) Effective Date

This airworthiness directive (AD) becomes effective May 4, 2012.

(b) Affected ADs

None.

(c) Applicability

This AD applies to DG Flugzeugbau GmbH Models DG–500 Elan Orion, DG–500 Elan Trainer, DG–500/20 Elan, DG–500/22 Elan, DG–500M, and DG–500MB gliders, all serial numbers (S/N), certificated in any category.

(d) Subject

Air Transport Association of America (ATA) Code 53: Fuselage.

(e) Reason

This AD was prompted by damage to the bulkhead of the glider's center of gravity (CG) tow hook that, if not detected and corrected, may lead to failure of the fiberglass structure during a winch launch. We are issuing this AD to require actions to address the unsafe condition on these products.

(f) Actions and Compliance

Unless already done, do the following actions:

(1) *For all gliders:* Within 30 days after May 4, 2012 (the effective date of this AD), inspect the bulkhead of the CG tow hook and the bulkhead's glued joints for damage following DG Flugzeugbau GmbH Technical Note No. 500/04, dated August 30, 2011; and DG Flugzeugbau Working Instruction No. 1 for TN500/04, dated August 30, 2011.

(2) *For all gliders:* If you find damage during the inspection required by paragraph (f)(1) of this AD, before further flight, reinforce the bulkhead of the CG tow hook following DG Flugzeugbau GmbH Technical Note No. 500/04, dated August 30, 2011; and DG Flugzeugbau Working Instruction No. 1 for TN500/04, dated August 30, 2011.

(3) *For all gliders:* Unless already done as required by paragraph (f)(2) of this AD, within 5 months after May 4, 2012 (the effective date of this AD), reinforce the bulkhead of the CG tow hook following DG Flugzeugbau GmbH Technical Note No. 500/04, dated August 30, 2011; and DG Flugzeugbau Working Instruction No. 1 for TN500/04, dated August 30, 2011.

(4) *For gliders with S/N 5E1 through S/N 5E23:* While doing the modification required by paragraph (f)(2) or (f)(3) of this AD, install a new adapted tow hook access cover following DG Flugzeugbau GmbH Technical Note No. 500/04, dated August 30, 2011; and DG Flugzeugbau Working Instruction No. 1 for TN500/04, dated August 30, 2011.

(5) *For all gliders:* Although the European Aviation Safety Agency (EASA) MCAI and DG Flugzeugbau GmbH Technical Note No. 500/04, dated August 30, 2011, allow the inspection required by paragraph (f)(1) of this AD to be done by a pilot-owner, the U.S. regulatory system requires all actions of this AD to be done by a certified mechanic.

(g) Other FAA AD Provisions

The following provisions also apply to this AD:

(1) *Alternative Methods of Compliance (AMOCs):* The Manager, Standards Office, FAA, has the authority to approve AMOCs for this AD, if requested using the procedures found in 14 CFR 39.19. Send information to ATTN: Jim Rutherford, Aerospace Engineer, FAA, Small Airplane Directorate, 901 Locust, Room 301, Kansas City, Missouri 64106; telephone: (816) 329–4165; fax: (816) 329–4090; email: *jim.rutherford@faa.gov.* Before using any approved AMOC on any airplane to which the AMOC applies, notify your appropriate principal inspector (PI) in the FAA Flight Standards District Office (FSDO), or lacking a PI, your local FSDO.

(2) *Airworthy Product:* For any requirement in this AD to obtain corrective actions from a manufacturer or other source, use these actions if they are FAA-approved. Corrective actions are considered FAA-approved if they are approved by the State of Design Authority (or their delegated agent). You are required to assure the product is airworthy before it is returned to service.

(3) *Reporting Requirements:* For any reporting requirement in this AD, a federal agency may not conduct or sponsor, and a person is not required to respond to, nor shall a person be subject to a penalty for failure to comply with a collection of information subject to the requirements of

the Paperwork Reduction Act unless that collection of information displays a current valid OMB Control Number. The OMB Control Number for this information collection is 2120–0056. Public reporting for this collection of information is estimated to be approximately 5 minutes per response, including the time for reviewing instructions, completing and reviewing the collection of information. All responses to this collection of information are mandatory. Comments concerning the accuracy of this burden and suggestions for reducing the burden should be directed to the FAA at: 800 Independence Ave. SW., Washington, DC 20591, Attn: Information Collection Clearance Officer, AES–200.

(h) Related Information

Refer to MCAI EASA AD No.: 2011–0209, dated October 26, 2011; DG Flugzeugbau GmbH TN No 500/4, dated August 30, 2011; and DG Flugzeugbau Working Instruction No. 1, dated August 30, 2011, for related information.

(i) Material Incorporated by Reference

(1) You must use the following service information to do the actions required by this AD, unless the AD specifies otherwise. The Director of the Federal Register approved the incorporation by reference (IBR) under 5 U.S.C. 552(a) and 1 CFR part 51 of the following service information:

(i) DG Flugzeugbau GmbH Technical Note No. 500/04, dated August 30, 2011; and

(ii) DG Flugzeugbau Working Instruction No. 1 for TN500/04, dated August 30, 2011.

(2) For service information identified in this AD, contact DG-Flugzeugbau GmbH, Otto-Lilienthal-Weg 2, 76646 Bruchsal, Federal Republic of Germany; telephone: +49 (0) 7251 3020140, fax: +49 (0) 7251 3020149; email: *dirks@dg-flugzeugbau.de;* Internet: *www.dg-flugzeugbau.de.*

(3) You may review copies of the service information at the FAA, Small Airplane Directorate, 901 Locust, Kansas City, Missouri 64106. For information on the availability of this material at the FAA, call (816) 329–4148.

(4) You may also review copies of the service information that is incorporated by reference at the National Archives and Records Administration (NARA). For information on the availability of this material at an NARA facility, call 202–741–6030, or go to *http://www.archives.gov/federal_register/code_of_federal_regulations/ibr_locations.html.*

Issued in Kansas City, Missouri, on March 19, 2012.

Earl Lawrence,

Manager, Small Airplane Directorate, Aircraft Certification Service.

[FR Doc. 2012–7002 Filed 3–29–12; 8:45 am]

BILLING CODE 4910–13–P

DEPARTMENT OF TRANSPORTATION

Federal Aviation Administration

14 CFR Part 39

[Docket No. FAA–2012–0295; Directorate Identifier 2011–NM–057–AD; Amendment 39–16993; AD 2012–06–12]

RIN 2120–AA64

Airworthiness Directives; Airbus Airplanes

AGENCY: Federal Aviation Administration (FAA), Department of Transportation (DOT).

ACTION: Final rule; request for comments.

SUMMARY: We are adopting a new airworthiness directive (AD) for all Airbus Model A340–600 series airplanes. This AD requires a detailed inspection for abnormalities of the ball lock retainer on the off-wing ramp slides; for closure of the soft cover; for full engagement of the slide release pin; for broken, missing, and improper placement of the safety tie thread on the slide release pin; and for proper functioning of the vent valve; and replacement of the off-wing ramp slides if necessary. This AD was prompted by reports of in-flight loss of the blow-out panel and the slide unit from a right-hand off-wing ramp-slide. We are issuing this AD to detect and correct abnormalities of the ball lock retainer, if the soft cover is open, if the slide pin release is not engaged or the safety tie thread is missing, broken, or improperly placed and the vent valve is not functioning properly, which could result in in-flight loss of the off-wing ramp slide.

DATES: This AD becomes effective April 16, 2012.

The Director of the Federal Register approved the incorporation by reference of a certain publication listed in the AD as of April 16, 2012.

We must receive comments on this AD by May 14, 2012.

ADDRESSES: You may send comments by any of the following methods:

- *Federal eRulemaking Portal:* Go to *http://www.regulations.gov.* Follow the instructions for submitting comments.
- *Fax:* (202) 493–2251.
- *Mail:* U.S. Department of Transportation, Docket Operations, M–30, West Building Ground Floor, Room W12–140, 1200 New Jersey Avenue SE., Washington, DC 20590.
- *Hand Delivery:* U.S. Department of Transportation, Docket Operations, M–30, West Building Ground Floor, Room W12–140, 1200 New Jersey Avenue SE., Washington, DC, between 9 a.m. and 5 p.m., Monday through Friday, except Federal holidays.

Examining the AD Docket

You may examine the AD docket on the Internet at *http://www.regulations.gov;* or in person at the Docket Operations office between 9 a.m. and 5 p.m., Monday through Friday, except Federal holidays. The AD docket contains this AD, the regulatory evaluation, any comments received, and other information. The street address for the Docket Operations office (telephone (800) 647–5527) is in the **ADDRESSES** section. Comments will be available in the AD docket shortly after receipt.

FOR FURTHER INFORMATION CONTACT: Vladimir Ulyanov, Aerospace Engineer, International Branch, ANM–116, Transport Airplane Directorate, FAA 1601 Lind Avenue SW., Renton, Washington 98057–3356; telephone (425) 227–1138; fax (425) 227–1149.

SUPPLEMENTARY INFORMATION:

Discussion

The European Aviation Safety Agency (EASA), which is the Technical Agent for the Member States of the European Community, has issued EASA Airworthiness Directive 2011–0017, dated February 3, 2011 (referred to after this as ''the MCAI''), to correct an unsafe condition for the specified products. The MCAI states:

> An A340–600 operator has reported an in-flight loss of the blow-out panel and the slide unit from a Right Hand (RH) off-wing ramp-slide.
>
> Investigation has revealed that the two main contributor factors of a potential in-flight loss of the slide are the packboard soft covers not fully closed and the vent valve not activated.
>
> In flight, the air contained in the inflatable assembly could increase in volume due to air pressure changes. Consequently, pack growth could occur and apply loads on the packboard soft covers and the blow-out panel attachment hardware. To prevent a pack growth, a vent valve is installed and when activated can balance pressure inside the inflatable assembly with the ambient air pressure.
>
> Analysis indicates that non activation of the vent valve, followed by soft cover opening, could cause the packboard blow-out panel to separate from the slide enclosure, resulting in in-flight loss of the off-wing ramp slide, which would constitute an unsafe condition.
>
> For the reasons described above, this AD requires a one-time inspection [check] of the soft cover condition and check of the vent valve function on each off-wing ramp slide, and accomplishment of the applicable corrective actions [replacement of the off-wing ramp slide].

The one-time inspection consists of a detailed inspection for abnormalities of the ball lock retainer on the off-wing ramp slides; for closure of the soft cover; for full engagement of the slide release pin; for broken, missing, and improper placement of the safety tie thread on the slide release pin; and for proper functioning of the vent valve. You may obtain further information by examining the MCAI in the AD docket.

Relevant Service Information

Airbus has issued All Operators Telex A340–25A5191, dated January 18, 2011. The actions described in this service information are intended to correct the unsafe condition identified in the MCAI.

FAA's Determination and Requirements of This AD

This product has been approved by the aviation authority of another country, and is approved for operation in the United States. Pursuant to our bilateral agreement with the State of Design Authority, we have been notified of the unsafe condition described in the MCAI and service information referenced above. We are issuing this AD because we evaluated all pertinent information and determined the unsafe condition exists and is likely to exist or develop on other products of the same type design.

There are no products of this type currently registered in the United States. However, this rule is necessary to ensure that the described unsafe condition is addressed if any of these products are placed on the U.S. Register in the future.

FAA's Determination of the Effective Date

Since there are currently no domestic operators of this product, notice and opportunity for public comment before issuing this AD are unnecessary.

Comments Invited

This AD is a final rule that involves requirements affecting flight safety, and we did not precede it by notice and opportunity for public comment. We invite you to send any written relevant data, views, or arguments about this AD. Send your comments to an address listed under the **ADDRESSES** section. Include "Docket No. FAA–2012–0295; Directorate Identifier 2011–NM–057–AD" at the beginning of your comments. We specifically invite comments on the overall regulatory, economic, environmental, and energy aspects of this AD. We will consider all comments received by the closing date and may amend this AD because of those comments.

We will post all comments we receive, without change, to *http://www.regulations.gov,* including any personal information you provide. We will also post a report summarizing each substantive verbal contact we receive about this AD.

Authority for This Rulemaking

Title 49 of the United States Code specifies the FAA's authority to issue rules on aviation safety. Subtitle I, section 106, describes the authority of the FAA Administrator. "Subtitle VII: Aviation Programs," describes in more detail the scope of the Agency's authority.

We are issuing this rulemaking under the authority described in "Subtitle VII, Part A, Subpart III, Section 44701: General requirements." Under that section, Congress charges the FAA with promoting safe flight of civil aircraft in air commerce by prescribing regulations for practices, methods, and procedures the Administrator finds necessary for safety in air commerce. This regulation is within the scope of that authority because it addresses an unsafe condition that is likely to exist or develop on products identified in this rulemaking action.

Regulatory Findings

We determined that this AD will not have federalism implications under Executive Order 13132. This AD will not have a substantial direct effect on the States, on the relationship between the national government and the States, or on the distribution of power and responsibilities among the various levels of government.

For the reasons discussed above, I certify this AD:

1. Is not a "significant regulatory action" under Executive Order 12866;

2. Is not a "significant rule" under the DOT Regulatory Policies and Procedures (44 FR 11034, February 26, 1979); and

3. Will not affect intrastate aviation in Alaska; and

4. Will not have a significant economic impact, positive or negative, on a substantial number of small entities under the criteria of the Regulatory Flexibility Act.

We prepared a regulatory evaluation of the estimated costs to comply with this AD and placed it in the AD docket.

List of Subjects in 14 CFR Part 39

Air transportation, Aircraft, Aviation safety, Incorporation by reference, Safety.

Adoption of the Amendment

Accordingly, under the authority delegated to me by the Administrator, the FAA amends 14 CFR part 39 as follows:

PART 39—AIRWORTHINESS DIRECTIVES

■ 1. The authority citation for part 39 continues to read as follows:

Authority: 49 U.S.C. 106(g), 40113, 44701.

§ 39.13 [Amended]

■ 2. The FAA amends § 39.13 by adding the following new AD:

2012–06–12 Airbus: Amendment 39–16993. Docket No. FAA–2012–0295; Directorate Identifier 2011–NM–057–AD.

(a) Effective Date

This airworthiness directive (AD) becomes effective April 16, 2012.

(b) Affected ADs

None.

(c) Applicability

This AD applies to Airbus Model A340–642 airplanes, certificated in any category, all manufacturer serial numbers.

(d) Subject

Air Transport Association (ATA) of America Code 25: Equipment/Furnishings.

(e) Reason

This AD was prompted by reports of in-flight loss of the blow-out panel and the slide unit from a right-hand off-wing ramp-slide. We are issuing this AD to detect and correct abnormalities of the ball lock retainer, if the soft cover is open, if the slide pin release is not engaged or the safety tie thread is missing or broken, and the vent valve is not functioning properly, which could result in in-flight loss of the off-wing ramp slide.

(f) Compliance

You are responsible for having the actions required by this AD performed within the compliance times specified, unless the actions have already been done.

(g) Actions

Within 90 days after the effective date of this AD, do a detailed inspection for abnormalities of the ball lock retainer on the off-wing ramp slides; for closure of the soft cover; for full engagement of the slide release pin; for broken, missing, and improper placement of the safety tie thread on the slide release pin; and for proper function of the vent valve; in accordance with Airbus All Operators Telex (AOT) A340–25A5191, dated January 18, 2011. If the ball lock retainer has abnormalities, the soft cover is open, or the slide pin release is not engaged, or the safety tie thread is broken, missing, or improperly placed, or the vent valve is not functioning properly, before further flight, replace the off-wing ramp slide, in accordance with Airbus AOT A340–25A5191, dated January 18, 2011.

(h) Parts Installation

As of the effective date of this AD, no person may install any off-wing ramp slide having part number 4A3931–X on any airplane, unless the check required by paragraph (g) of this AD has been done and none of the conditions specified in paragraph (g) of this AD are found.

(i) Other FAA AD Provisions

The following provisions also apply to this AD:

(1) Alternative Methods of Compliance (AMOCs): The Manager, International Branch, FAA, has the authority to approve AMOCs for this AD, if requested using the procedures found in 14 CFR 39.19. In accordance with 14 CFR 39.19, send your request to your principal inspector or local Flight Standards District Office, as appropriate. If sending information directly to the International Branch, send it to ATTN: Vladimir Ulyanov, Aerospace Engineer, International Branch, ANM–116, Transport Airplane Directorate, FAA, 1601 Lind Avenue SW., Renton, Washington 98057–3356; telephone (425) 227–1138; fax (425) 227–1149. Information may be emailed to: *9-ANM-116-AMOC-REQUESTS@faa.gov.* Before using any approved AMOC, notify your appropriate principal inspector, or lacking a principal inspector, the manager of the local flight standards district office/certificate holding district office. The AMOC approval letter must specifically reference this AD.

(2) Airworthy Product: For any requirement in this AD to obtain corrective actions from a manufacturer or other source, use these actions if they are FAA-approved. Corrective actions are considered FAA-approved if they are approved by the State of Design Authority (or their delegated agent). You are required to assure the product is airworthy before it is returned to service.

(j) Related Information

Refer to Mandatory Continuing Airworthiness Information (MCAI) European Aviation Safety Airworthiness Directive 2011–0017, dated February 3, 2011; and Airbus AOT A340–25A5191, dated January 18, 2011; for related information.

(k) Material Incorporated by Reference

(1) You must use the following service information to do the actions required by this AD, unless the AD specifies otherwise. The Director of the Federal Register approved the incorporation by reference (IBR) of the following service information under 5 U.S.C. 552(a) and 1 CFR part 51:

(i) Airbus All Operators Telex A340–25A5191, dated January 18, 2011. The document number and date are identified only on the first page of the document.

(2) For service information identified in this AD, contact Airbus SAS—Airworthiness Office—EAL, 1 Rond Point Maurice Bellonte, 31707 Blagnac Cedex, France; telephone +33 5 61 93 36 96; fax +33 5 61 93 45 80; email *airworthiness.A330-A340@airbus.com;* Internet *http://www.airbus.com.*

(3) You may review copies of the service information at the FAA, Transport Airplane Directorate, 1601 Lind Avenue SW., Renton, Washington. For information on the availability of this material at the FAA, call 425–227–1221.

(4) You may also review copies of the service information that is incorporated by reference at the National Archives and Records Administration (NARA). For information on the availability of this material at NARA, call 202–741–6030, or go to: *http://www.archives.gov/federal_register/code_of_federal_regulations/ibr_locations.html.*

Issued in Renton, Washington, on March 9, 2012.

Ali Bahrami,

Manager, Transport Airplane Directorate, Aircraft Certification Service.

[FR Doc. 2012–7004 Filed 3–29–12; 8:45 am]

BILLING CODE 4910–13–P

DEPARTMENT OF TRANSPORTATION

Federal Aviation Administration

14 CFR Part 39

[Docket No. FAA–2012–0294; Directorate Identifier 2011–NM–047–AD; Amendment 39–16992; AD 2012–06–11]

RIN 2120–AA64

Airworthiness Directives; Airbus Airplanes

AGENCY: Federal Aviation Administration (FAA), Department of Transportation (DOT).

ACTION: Final rule; request for comments.

SUMMARY: We are adopting a new airworthiness directive (AD) for certain Airbus Model A321–131, –211, –212, and –231 airplanes. This AD requires a rotating probe inspection for cracking of the lower panel bore holes of the center wing box (CWB), and corrective actions if necessary. This AD was prompted by reports of incorrect installation of rib pads of the lower aft panel of the CWB due to poor clamping during drilling, and reports that metal chips trapped between panels and stiffeners could impact the fatigue life of CWB panels. We are issuing this AD to detect and correct cracking and damage in the bore holes of the rib pads of the lower forward and aft panels of the CWB which could result in reduced structural integrity of the wings.

DATES: This AD becomes effective April 16, 2012.

The Director of the Federal Register approved the incorporation by reference of a certain publication listed in the AD as of April 16, 2012.

We must receive comments on this AD by May 14, 2012.

ADDRESSES: You may send comments by any of the following methods:

- *Federal eRulemaking Portal:* Go to *http://www.regulations.gov.* Follow the instructions for submitting comments.
- *Fax:* (202) 493–2251.
- *Mail:* U.S. Department of Transportation, Docket Operations, M–30, West Building Ground Floor, Room W12–140, 1200 New Jersey Avenue SE., Washington, DC 20590.
- *Hand Delivery:* U.S. Department of Transportation, Docket Operations, M–30, West Building Ground Floor, Room W12–140, 1200 New Jersey Avenue SE., Washington, DC, between 9 a.m. and 5 p.m., Monday through Friday, except Federal holidays.

Examining the AD Docket

You may examine the AD docket on the Internet at *http://www.regulations.gov;* or in person at the Docket Operations office between 9 a.m. and 5 p.m., Monday through Friday, except Federal holidays. The AD docket contains this AD, the regulatory evaluation, any comments received, and other information. The street address for the Docket Operations office (telephone (800) 647–5527) is in the **ADDRESSES** section. Comments will be available in the AD docket shortly after receipt.

FOR FURTHER INFORMATION CONTACT: Sanjay Ralhan, Aerospace Engineer, International Branch, ANM–116, Transport Airplane Directorate, FAA, 1601 Lind Avenue SW., Renton, Washington 98057–3356; telephone (425) 227–1405; fax (425) 227–1149.

SUPPLEMENTARY INFORMATION:

Discussion

The European Aviation Safety Agency (EASA), which is the Technical Agent for the Member States of the European Community, has issued EASA Airworthiness Directive 2011–0035, dated March 2, 2011 (referred to after this as ''the MCAI''), to correct an unsafe condition for the specified products. The MCAI states:

> During removal of one centre wing box (CWB) lower aft panel [due to reports of defects] during production, the following defects were found:
> —An excessive layer of sealant in between the lower panel and the rib pads, and
> —Small metal chips between the panel and rib pads.
>
> Investigations revealed that the metal chips trapped between parts (panels and stiffeners) have a possible impact on fatigue life of CWB panels.
>
> Consequently, cracks in the bore holes of the CWB lower panel may occur in service, thereby reducing the structural integrity of the aeroplane.
>
> For the reasons describe above, this AD requires a special detailed [rotating probe] inspection of CWB lower panel bore holes to detect any defect [damage] or crack and,

depending on findings, associated corrective actions.

The unsafe condition is potential cracking and damage in the bore holes of the rib pads of the lower forward and aft panels of the CWB which could result in reduced structural integrity of the wings. Required actions include a rotating probe inspection for cracking of the lower panel bore holes of the CWB, and corrective actions if necessary. The corrective actions include reinstalling new nominal fasteners or oversize fasteners. You may obtain further information by examining the MCAI in the AD docket.

Relevant Service Information

Airbus has issued Mandatory Service Bulletin A320–57–1120, Revision 01, including Appendices 01, 02, and 03, dated November 15, 2006. The actions described in this service information are intended to correct the unsafe condition identified in the MCAI.

FAA's Determination and Requirements of This AD

This product has been approved by the aviation authority of another country, and is approved for operation in the United States. Pursuant to our bilateral agreement with the State of Design Authority, we have been notified of the unsafe condition described in the MCAI and service information referenced above. We are issuing this AD because we evaluated all pertinent information and determined the unsafe condition exists and is likely to exist or develop on other products of the same type design.

There are no products of this type currently registered in the United States. However, this rule is necessary to ensure that the described unsafe condition is addressed if any of these products are placed on the U.S. Register in the future.

FAA's Determination of the Effective Date

Since there are currently no domestic operators of this product, notice and opportunity for public comment before issuing this AD are unnecessary.

Comments Invited

This AD is a final rule that involves requirements affecting flight safety, and we did not precede it by notice and opportunity for public comment. We invite you to send any written relevant data, views, or arguments about this AD. Send your comments to an address listed under the **ADDRESSES** section. Include ''Docket No. FAA–2012–0294; Directorate Identifier 2011–NM–047–AD'' at the beginning of your comments. We specifically invite comments on the overall regulatory, economic, environmental, and energy aspects of this AD. We will consider all comments received by the closing date and may amend this AD because of those comments.

We will post all comments we receive, without change, to *http://www.regulations.gov,* including any personal information you provide. We will also post a report summarizing each substantive verbal contact we receive about this AD.

Authority for This Rulemaking

Title 49 of the United States Code specifies the FAA's authority to issue rules on aviation safety. Subtitle I, section 106, describes the authority of the FAA Administrator. ''Subtitle VII: Aviation Programs,'' describes in more detail the scope of the Agency's authority.

We are issuing this rulemaking under the authority described in ''Subtitle VII, Part A, Subpart III, Section 44701: General requirements.'' Under that section, Congress charges the FAA with promoting safe flight of civil aircraft in air commerce by prescribing regulations for practices, methods, and procedures the Administrator finds necessary for safety in air commerce. This regulation is within the scope of that authority because it addresses an unsafe condition that is likely to exist or develop on products identified in this rulemaking action.

Regulatory Findings

We determined that this AD will not have federalism implications under Executive Order 13132. This AD will not have a substantial direct effect on the States, on the relationship between the national government and the States, or on the distribution of power and responsibilities among the various levels of government.

For the reasons discussed above, I certify that this AD:

1. Is not a ''significant regulatory action'' under Executive Order 12866;

2. Is not a ''significant rule'' under the DOT Regulatory Policies and Procedures (44 FR 11034, February 26, 1979);

3. Will not affect intrastate aviation in Alaska; and

4. Will not have a significant economic impact, positive or negative, on a substantial number of small entities under the criteria of the Regulatory Flexibility Act.

We prepared a regulatory evaluation of the estimated costs to comply with this proposed AD and placed it in the AD docket.

List of Subjects in 14 CFR Part 39

Air transportation, Aircraft, Aviation safety, Incorporation by reference, Safety.

Adoption of the Amendment

Accordingly, under the authority delegated to me by the Administrator, the FAA amends 14 CFR part 39 as follows:

PART 39—AIRWORTHINESS DIRECTIVES

■ 1. The authority citation for part 39 continues to read as follows:

Authority: 49 U.S.C. 106(g), 40113, 44701.

§ 39.13 [Amended]

■ 2. The FAA amends § 39.13 by adding the following new AD:

2012–06–11 Airbus: Amendment 39–16992. Docket No. FAA–2012–0294; Directorate Identifier 2011–NM–047–AD.

(a) Effective Date

This airworthiness directive (AD) becomes effective April 16, 2012.

(b) Affected ADs

None.

(c) Applicability

This AD applies to Airbus Model A321–131, –211, –212, and –231 airplanes; certificated in any category; manufacturer serial numbers 1293, 1299, 1307, 1333, 1356, and 1366.

(d) Subject

Air Transport Association (ATA) of America Code 57: Wings.

(e) Reason

This AD was prompted by reports of incorrect installation of rib pads of the lower aft panel of the center wing box (CWB) due to poor clamping during drilling, and reports that metal chips trapped between panels and stiffeners could impact the fatigue life of CWB panels. We are issuing this AD to detect and correct cracking and damage in the bore holes of the rib pads of the lower forward and aft panels of the CWB which could result in reduced structural integrity of the wings.

(f) Compliance

You are responsible for having the actions required by this AD performed within the compliance times specified, unless the actions have already been done.

(g) Rotating Probe Inspection

Before the accumulation of 24,000 total flight cycles or 40,000 total flight hours, whichever occurs first, since first flight of the airplane: Do a rotating probe inspection for cracking of the bore holes of the rib pads in the lower forward and aft panels of the CWB, in accordance with the Accomplishment Instructions of Airbus Mandatory Service Bulletin A320–57–1120, Revision 01, excluding Appendices 01 and 02, and including Appendix 03, dated November 15, 2006.

(h) Repair of Cracking

If any cracking is found during any inspection required by paragraph (g) of this AD, before further flight, repair the crack according to a method approved by the Manager, International Branch, ANM–116, Transport Airplane Directorate, FAA, or EASA (or its delegated agent).

(i) Oversizing Bore Holes and Installing Fasteners

If no cracking is found during any inspection required by paragraph (g) of this AD, before further flight, oversize the holes to the next nominal diameter and install the rib pads with the new next nominal diameter fasteners, in accordance with the Accomplishment Instructions of Airbus Mandatory Service Bulletin A320–57–1120, Revision 01, excluding Appendices 01 and 02, and including Appendix 03, dated November 15, 2006.

(j) Other FAA AD Provisions

The following provisions also apply to this AD:

(1) *Alternative Methods of Compliance (AMOCs):* The Manager, ANM–116, International Branch, Transport Airplane Directorate, FAA, has the authority to approve AMOCs for this AD, if requested using the procedures found in 14 CFR 39.19. In accordance with 14 CFR 39.19, send your request to your principal inspector or local Flight Standards District Office, as appropriate. If sending information directly to the International Branch, send it to ATTN: Sanjay Ralhan, Aerospace Engineer, International Branch, ANM–116, Transport Airplane Directorate, FAA, 1601 Lind Avenue SW., Renton, Washington 98057–3356; telephone (425) 227–1405; fax (425) 227–1149.

Information may be emailed to: *9-ANM-116-AMOC-REQUESTS@faa.gov*. Before using any approved AMOC, notify your appropriate principal inspector, or lacking a principal inspector, the manager of the local flight standards district office/certificate holding district office. The AMOC approval letter must specifically reference this AD.

(2) *Airworthy Product:* For any requirement in this AD to obtain corrective actions from a manufacturer or other source, use these actions if they are FAA-approved. Corrective actions are considered FAA-approved if they are approved by the State of Design Authority (or their delegated agent). You are required to assure the product is airworthy before it is returned to service.

(k) Related Information

Refer to Mandatory Continuing Airworthiness Information (MCAI) European Aviation Safety Agency (EASA) Airworthiness Directive 2011–0035, dated March 2, 2011; and Airbus Mandatory Service Bulletin A320–57–1120, Revision 01, dated November 15, 2006; for related information.

(l) Material Incorporated by Reference

(1) You must use the following service information to do the actions required by this AD, unless the AD specifies otherwise. The Director of the Federal Register approved the incorporation by reference (IBR) of the following service information under 5 U.S.C. 552(a) and 1 CFR part 51:

(i) Airbus Mandatory Service Bulletin A320–57–1120, Revision 01, excluding Appendices 01 and 02, and including Appendix 03, dated November 15, 2006.

(2) For service information identified in this AD, contact Airbus, Airworthiness Office—EAS, 1 Rond Point Maurice Bellonte, 31707 Blagnac Cedex, France; telephone +33 5 61 93 36 96; fax +33 5 61 93 44 51; email: *account.airworth-eas@airbus.com;* Internet *http://www.airbus.com*.

(3) You may review copies of the service information at the FAA, Transport Airplane Directorate, 1601 Lind Avenue SW., Renton, Washington. For information on the availability of this material at the FAA, call 425–227–1221.

(4) You may also review copies of the service information that is incorporated by reference at the National Archives and Records Administration (NARA). For information on the availability of this material at NARA, call 202–741–6030, or go to: *http://www.archives.gov/federal_register/code_of_federal_regulations/ibr_locations.html*.

Issued in Renton, Washington, on March 8, 2012.

Ali Bahrami,

Manager, Transport Airplane Directorate, Aircraft Certification Service.

[FR Doc. 2012–7007 Filed 3–29–12; 8:45 am]

BILLING CODE 4910–13–P

DEPARTMENT OF TRANSPORTATION

Federal Aviation Administration

14 CFR Part 39

[Docket No. FAA–2011–0223; Directorate Identifier 2010–NM–161–AD; Amendment 39–17006; AD 2012–06–25]

RIN 2120–AA64

Airworthiness Directives; Goodrich Evacuation Systems Approved Under Technical Standard Order (TSO) TSO–C69b and Installed on Airbus Airplanes

AGENCY: Federal Aviation Administration (FAA), DOT.

ACTION: Final rule.

SUMMARY: We are superseding an existing airworthiness directive (AD) for Goodrich Evacuation Systems approved under TSO TSO–C69b and installed on Model A330–200 and –300 series airplanes, Model A340–200 and –300 series airplanes, and Model A340–500 and –600 series airplanes. That AD currently requires inspecting to determine the part number of the pressure relief valves on the affected Goodrich evacuation systems, and corrective action if necessary. This new AD requires inspecting to determine the part number of the pressure relief valves on the affected Goodrich evacuation systems and replacing certain pressure relief valves, and adds airplanes to the applicability. This AD was prompted by reports that during workshop testing, certain pressure relief valves, which were required by the existing AD, did not seal and allowed the pressure in certain slides/rafts to fall below the minimum raft mode pressure for the unit. We are issuing this AD to prevent loss of pressure in the escape slides/rafts after an emergency evacuation, which could result in inadequate buoyancy to support the raft's passenger capacity during ditching and increase the chance for injury to raft passengers.

DATES: This AD is effective May 4, 2012.

The Director of the Federal Register approved the incorporation by reference of certain publications listed in the AD as of May 4, 2012.

ADDRESSES: For service information identified in this AD, contact Goodrich Corporation, Aircraft Interior Products, ATTN: Technical Publications, 3414 South Fifth Street, Phoenix, Arizona 85040; phone: 602–243–2270; email: *george.yribarren@goodrich.com*; Internet: *http://www.goodrich.com/TechPubs*. You may review copies of the referenced service information at the FAA, Transport Airplane Directorate, 1601 Lind Avenue SW., Renton, Washington. For information on the availability of this material at the FAA, call 425–227–1221.

Examining the AD Docket

You may examine the AD docket on the Internet at *http://www.regulations.gov;* or in person at the Docket Management Facility between 9 a.m. and 5 p.m., Monday through Friday, except Federal holidays. The AD docket contains this AD, the regulatory evaluation, any comments received, and other information. The address for the Docket Office (phone: 800–647–5527) is Document Management Facility, U.S. Department of Transportation, Docket Operations, M–30, West Building Ground Floor, Room W12–140, 1200 New Jersey Avenue SE., Washington, DC 20590.

FOR FURTHER INFORMATION CONTACT: Tracy Ton, Aerospace Engineer, Cabin Safety/Mechanical and Environmental Systems Branch, ANM–150L, FAA, Los Angeles Aircraft Certification Office, 3960 Paramount Boulevard, Lakewood, California 90712–4137; phone: 562–627–5352; fax: 562–627–5210; email: *Tracy.Ton@faa.gov.*

SUPPLEMENTARY INFORMATION:

Discussion

We issued a supplemental notice of proposed rulemaking (SNPRM) to amend 14 CFR part 39 to supersede AD 2007–23–01, Amendment 39–15247 (72 FR 62568, November 6, 2007). That AD applies to the specified products. The SNPRM was published in the **Federal Register** on December 29, 2011 (76 FR 81885). The original NPRM (76 FR 15229, March 21, 2011) proposed to require inspecting to determine the part number of the pressure relief valves on the affected Goodrich evacuation systems and replacing certain pressure relief valves. The original NPRM also added Model A330–223F and –243F airplanes to the applicability. The SNPRM proposed to add Model A330–302 and –303 airplanes to the applicability.

Comments

We gave the public the opportunity to participate in developing this AD. We received no comments on the SNPRM (76 FR 81885, December 29, 2011) or on the determination of the cost to the public.

Conclusion

We reviewed the relevant data and determined that air safety and the public interest require adopting the AD as proposed.

Costs of Compliance

We estimate that this AD affects 41 airplanes of U.S. registry.

We estimate the following costs to comply with this AD:

ESTIMATED COSTS

Action	Labor cost	Parts cost	Cost per product	Cost on U.S. operators
Inspection to determine part numbers	1 work-hour × $85 per hour = $85	$0	$85	$3,485

We estimate the following costs to do any necessary replacements that would be required based on the results of the inspection. We have no way of determining the number of aircraft that might need these replacements.

ON-CONDITION COSTS

Action	Labor cost	Parts cost	Cost per product
Valve replacement	1 work-hour × $85 per hour = $85	$775	$860 per slide.

According to the manufacturer, some of the costs of this AD may be covered under warranty, thereby reducing the cost impact on affected individuals. We do not control warranty coverage for affected individuals. As a result, we have included all costs in our cost estimate.

Authority for This Rulemaking

Title 49 of the United States Code specifies the FAA's authority to issue rules on aviation safety. Subtitle I, section 106, describes the authority of the FAA Administrator. Subtitle VII, Aviation Programs, describes in more detail the scope of the Agency's authority.

We are issuing this rulemaking under the authority described in subtitle VII, part A, subpart III, section 44701, ''General requirements.'' Under that section, Congress charges the FAA with promoting safe flight of civil aircraft in air commerce by prescribing regulations for practices, methods, and procedures the Administrator finds necessary for safety in air commerce. This regulation is within the scope of that authority because it addresses an unsafe condition that is likely to exist or develop on products identified in this rulemaking action.

Regulatory Findings

We have determined that this AD will not have federalism implications under Executive Order 13132. This AD will not have a substantial direct effect on the States, on the relationship between the national government and the States, or on the distribution of power and responsibilities among the various levels of government.

For the reasons discussed above, I certify that this AD:

(1) Is not a ''significant regulatory action'' under Executive Order 12866,

(2) Is not a ''significant rule'' under DOT Regulatory Policies and Procedures (44 FR 11034, February 26, 1979),

(3) Will not affect intrastate aviation in Alaska, and

(4) Will not have a significant economic impact, positive or negative, on a substantial number of small entities under the criteria of the Regulatory Flexibility Act.

List of Subjects in 14 CFR Part 39

Air transportation, Aircraft, Aviation safety, Incorporation by reference, Safety.

Adoption of the Amendment

Accordingly, under the authority delegated to me by the Administrator, the FAA amends 14 CFR part 39 as follows:

PART 39—AIRWORTHINESS DIRECTIVES

■ 1. The authority citation for part 39 continues to read as follows:

Authority: 49 U.S.C. 106(g), 40113, 44701.

§ 39.13 [Amended]

■ 2. The FAA amends § 39.13 by removing airworthiness directive (AD) 2007–23–01, Amendment 39–15247 (72 FR 62568, November 6, 2007), and adding the following new AD:

2012–06–25 Goodrich (Formerly BF Goodrich): Amendment 39–17006; Docket No. FAA–2011–0223; Directorate Identifier 2010–NM–161–AD.

(a) Effective Date

This airworthiness directive (AD) is effective May 4, 2012.

(b) Affected ADs

This AD supersedes AD 2007–23–01, Amendment 39–15247 (72 FR 62568, November 6, 2007).

(c) Applicability

This AD applies to Goodrich evacuation systems approved under Technical Standard Order (TSO) TSO–C69b, as installed on the Airbus airplanes, certificated in any category, identified in paragraphs (c)(1), (c)(2), and (c)(3) of this AD.

(1) Model A330–201, –202, –203, –223, –243, –301, –302, –303, –321, –322, –323, –341, –342, –343, –223F, and –243F airplanes, as identified in Goodrich Service

Bulletin 7A1508/09/10/39–25–373, Revision 3, dated March 30, 2011.

(2) Model A340–211, –212, –213, –311, –312, and –313 airplanes, as identified in Goodrich Service Bulletin 7A1508/09/10/39–25–373, Revision 3, dated March 30, 2011.

(3) Model A340–541 and –642 airplanes, as identified in Goodrich Service Bulletins 7A1508/09/10/39–25–373, Revision 3, dated March 30, 2011; and 4A3928/4A3934–25–374, Revision 2, dated March 30, 2011.

(d) Subject

Joint Aircraft System Component (JASC)/Air Transport Association (ATA) of America Code 2560, Emergency Equipment.

(e) Unsafe Condition

This AD was prompted by reports that during workshop testing, certain pressure relief valves did not seal and allowed the pressure in certain slides/rafts to fall below the minimum raft mode pressure for the unit. We are issuing this AD to prevent loss of pressure in the escape slides/rafts after an emergency evacuation, which could result in inadequate buoyancy to support the raft's passenger capacity during ditching and increase the chance for injury to raft passengers.

(f) Compliance

Comply with this AD within the compliance times specified, unless already done.

(g) Inspection

Within 36 months after the effective date of this AD, inspect the evacuation systems to determine whether any pressure relief valve having part number (P/N) 4A3641–1, 4A3791–3, 4A3641–26, or 4A3791–6 is installed. A review of airplane maintenance records or the system identification placard on the girt is acceptable in lieu of this inspection if the part number of the pressure relief valve can be conclusively determined from that review.

(h) Part Replacement

If any valve having P/N 4A3641–1, 4A3791–3, 4A3641–26, or 4A3791–6 is identified during the inspection or review specified in paragraph (g) of this AD: Before further flight, do the applicable actions required by paragraphs (h)(1) and (h)(2) of this AD:

(1) Replace all pressure relief valves having P/Ns 4A3641–1 and 4A3791–3 with pressure relief valves having P/N 115815–1, and mark the system identification placard on the girt, in accordance with the Accomplishment Instructions of Goodrich Service Bulletin 7A1508/09/10/39–25–373, Revision 3, dated March 30, 2011.

(2) Replace all pressure relief valves having P/Ns 4A3641–26 and 4A3791–6 with pressure relief valves having P/N 115815–1 (for evacuation systems having P/N 4A3934 series units) or 115815–2 (for evacuation systems having P/N 4A3928 series units); and mark the system identification placard on the girt; in accordance with the Accomplishment Instructions of Goodrich Service Bulletin 4A3928/4A3934–25–374, Revision 2, dated March 30, 2011.

(i) Parts Installation

As of the effective date of this AD, no person may install a pressure relief valve having P/N 4A3641–1, 4A3791–3, 4A3641–26, or 4A3791–6 in the evacuation system on any airplane.

(j) Credit for Previous Actions

This paragraph provides credit for actions required by paragraphs (g) and (h) of this AD, if those actions were performed before the effective date of this AD using Goodrich Service Bulletin 7A1508/09/10/39–25–373, dated March 31, 2008, Goodrich Service Bulletin 7A1508/09/10/39–25–373, Revision 1, dated August 1, 2008, or Goodrich Service Bulletin 7A1508/09/10/39–25–373, Revision 2, dated May 8, 2009; or Goodrich Service Bulletin 4A3928/4A3934–25–374, dated July 18, 2008, or Goodrich Service Bulletin 4A3928/4A3934–25–374, Revision 1, dated May 8, 2009; as applicable.

(k) Alternative Methods of Compliance (AMOCs)

(1) The Manager, Los Angeles Aircraft Certification Office, FAA, has the authority to approve AMOCs for this AD, if requested using the procedures found in 14 CFR 39.19. In accordance with 14 CFR 39.19, send your request to your principal inspector or local Flight Standards District Office, as appropriate. If sending information directly to the manager of the ACO, send it to the attention of the person identified in the Related Information section of this AD.

(2) Before using any approved AMOC, notify your appropriate principal inspector, or lacking a principal inspector, the manager of the local flight standards district office/certificate holding district office.

(l) Related Information

For more information about this AD, contact Tracy Ton, Aerospace Engineer, Cabin Safety/Mechanical and Environmental Systems Branch, ANM–150L, FAA, Los Angeles Aircraft Certification Office, 3960 Paramount Boulevard, Lakewood, California 90712–4137; phone: 562–627–5352; fax: 562–627–5210; email: *Tracy.Ton@faa.gov.*

(m) Material Incorporated by Reference

(1) You must use the following service information to do the actions required by this AD, unless the AD specifies otherwise. The Director of the Federal Register approved the incorporation by reference (IBR) of the following service information under 5 U.S.C. 552(a) and 1 CFR part 51:

(i) Goodrich Service Bulletin 7A1508/09/10/39–25–373, Revision 3, dated March 30, 2011.

(ii) Goodrich Service Bulletin 4A3928/4A3934–25–374, Revision 2, dated March 30, 2011.

(2) For service information identified in this AD, contact Goodrich Corporation, Aircraft Interior Products, ATTN: Technical Publications, 3414 South Fifth Street, Phoenix, Arizona 85040; phone: 602–243–2270; email: *george.yribarren@goodrich.com;* Internet: *http://www.goodrich.com/TechPubs.*

(3) You may review copies of the referenced service information at the FAA, Transport Airplane Directorate, 1601 Lind Avenue SW., Renton, Washington. For information on the availability of this material at the FAA, call 425–227–1221.

(4) You may also review copies of the service information that is incorporated by reference at the National Archives and Records Administration (NARA). For information on the availability of this material at NARA, call 202–741–6030, or go to: *http://www.archives.gov/federal-register/cfr/ibr_locations.html.*

Issued in Renton, Washington, on March 19, 2012.

Ali Bahrami,

Manager, Transport Airplane Directorate, Aircraft Certification Service.

[FR Doc. 2012–7409 Filed 3–29–12; 8:45 am]

BILLING CODE 4910–13–P

DEPARTMENT OF TRANSPORTATION

Federal Aviation Administration

14 CFR Part 39

[Docket No. FAA–2012–0292; Directorate Identifier 2011–NM–056–AD; Amendment 39–16991; AD 2012–06–10]

RIN 2120–AA64

Airworthiness Directives; Airbus Airplanes

AGENCY: Federal Aviation Administration (FAA), Department of Transportation (DOT).

ACTION: Final rule; request for comments.

SUMMARY: We are adopting a new airworthiness directive (AD) for certain Airbus Model A330–200, A330–300, A340–500, and A340–600 series airplanes. This AD requires a detailed inspection for cracked and missing nuts, and replacement of cracked or missing nuts with new nuts having the same part number. This AD was prompted by reports of cracked nuts detected during production. We are issuing this AD to detect and correct cracked or missing nuts, and replace all affected nuts in multiple locations (including fuel tank areas) that could result in reduced structural integrity of the airplane.

DATES: This AD becomes effective April 16, 2012.

The Director of the Federal Register approved the incorporation by reference of certain publications listed in the AD as of April 16, 2012.

We must receive comments on this AD by May 14, 2012.

ADDRESSES: You may send comments by any of the following methods:

- *Federal eRulemaking Portal:* Go to *http://www.regulations.gov.* Follow the instructions for submitting comments.

- *Fax:* (202) 493–2251.
- *Mail:* U.S. Department of Transportation, Docket Operations, M–30, West Building Ground Floor, Room W12–140, 1200 New Jersey Avenue SE., Washington, DC 20590.
- *Hand Delivery:* U.S. Department of Transportation, Docket Operations, M–30, West Building Ground Floor, Room W12–140, 1200 New Jersey Avenue SE., Washington, DC, between 9 a.m. and 5 p.m., Monday through Friday, except Federal holidays.

Examining the AD Docket

You may examine the AD docket on the Internet at *http://www.regulations.gov;* or in person at the Docket Operations office between 9 a.m. and 5 p.m., Monday through Friday, except Federal holidays. The AD docket contains this AD, the regulatory evaluation, any comments received, and other information. The street address for the Docket Operations office (telephone (800) 647–5527) is in the **ADDRESSES** section. Comments will be available in the AD docket shortly after receipt.

FOR FURTHER INFORMATION CONTACT: Vladimir Ulyanov, Aerospace Engineer, International Branch, ANM–116, Transport Airplane Directorate, FAA, 1601 Lind Avenue SW., Renton, Washington 98057–3356; telephone (425) 227–1138; fax (425) 227–1149.

SUPPLEMENTARY INFORMATION:

Discussion

The European Aviation Safety Agency (EASA), which is the Technical Agent for the Member States of the European Community, has issued EASA Airworthiness Directive 2010–0252, dated November 29, 2010 (referred to after this as ''the MCAI''), to correct an unsafe condition for the specified products. The MCAI states:

During structural part assembly in Airbus production line, some nuts Part Number (P/N) ASNA2531–4 were found cracked.

Investigations were performed to determine batches of the affected nuts.

Static, fatigue and corrosion tests were performed and demonstrated that no immediate maintenance action is necessary. However, due to the large number of these nuts fitted on primary structural elements, this condition, if not corrected, could impair the structural integrity of the affected aeroplanes.

This [EASA] AD requires detailed inspection [for cracked and missing nuts] and replacement of nuts P/N ASNA2531–4 with new ones having the same P/N, in order to restore the structural integrity of the affected aeroplanes, and the accomplishment of the applicable corrective actions. [If no missing or cracked nut is found, replace with new nut.]

You may obtain further information by examining the MCAI in the AD docket.

Relevant Service Information

Airbus has issued Mandatory Service Bulletin A330–53–3183, including Appendices 01 and 02, dated September 30, 2010 (for Model A330–200 and –300 series airplanes); and Mandatory Service Bulletin A340–53–5056, including Appendices 01 and 02, dated October 7, 2010 (for Model A340–500 and –600 series airplanes). The actions described in this service information are intended to correct the unsafe condition identified in the MCAI.

FAA's Determination and Requirements of This AD

This product has been approved by the aviation authority of another country, and is approved for operation in the United States. Pursuant to our bilateral agreement with the State of Design Authority, we have been notified of the unsafe condition described in the MCAI and service information referenced above. We are issuing this AD because we evaluated all pertinent information and determined the unsafe condition exists and is likely to exist or develop on other products of the same type design.

There are no products of this type currently registered in the United States. However, this rule is necessary to ensure that the described unsafe condition is addressed if any of these products are placed on the U.S. Register in the future.

Differences Between the AD and the MCAI or Service Information

This AD differs from the MCAI and/or service information as follows: The MCAI and the service information include a reporting requirement. This AD does not require reporting of the inspection results to the airplane manufacturer.

FAA's Determination of the Effective Date

Since there are currently no domestic operators of this product, notice and opportunity for public comment before issuing this AD are unnecessary.

Comments Invited

This AD is a final rule that involves requirements affecting flight safety, and we did not precede it by notice and opportunity for public comment. We invite you to send any written relevant data, views, or arguments about this AD. Send your comments to an address listed under the **ADDRESSES** section. Include ''Docket No. FAA–2012–0292; Directorate Identifier 2011–NM–056–AD'' at the beginning of your comments. We specifically invite comments on the overall regulatory, economic, environmental, and energy aspects of this AD. We will consider all comments received by the closing date and may amend this AD because of those comments.

We will post all comments we receive, without change, to *http://www.regulations.gov,* including any personal information you provide. We will also post a report summarizing each substantive verbal contact we receive about this AD.

Authority for This Rulemaking

Title 49 of the United States Code specifies the FAA's authority to issue rules on aviation safety. Subtitle I, section 106, describes the authority of the FAA Administrator. ''Subtitle VII: Aviation Programs,'' describes in more detail the scope of the Agency's authority.

We are issuing this rulemaking under the authority described in ''Subtitle VII, Part A, Subpart III, Section 44701: General requirements.'' Under that section, Congress charges the FAA with promoting safe flight of civil aircraft in air commerce by prescribing regulations for practices, methods, and procedures the Administrator finds necessary for safety in air commerce. This regulation is within the scope of that authority because it addresses an unsafe condition that is likely to exist or develop on products identified in this rulemaking action.

Regulatory Findings

We determined that this AD will not have federalism implications under Executive Order 13132. This AD will not have a substantial direct effect on the States, on the relationship between the national government and the States, or on the distribution of power and responsibilities among the various levels of government.

For the reasons discussed above, I certify this AD:

1. Is not a ''significant regulatory action'' under Executive Order 12866;
2. Is not a ''significant rule'' under the DOT Regulatory Policies and Procedures (44 FR 11034, February 26, 1979);
3. Will not affect intrastate aviation in Alaska; and
4. Will not have a significant economic impact, positive or negative, on a substantial number of small entities under the criteria of the Regulatory Flexibility Act.

We prepared a regulatory evaluation of the estimated costs to comply with this AD and placed it in the AD docket.

List of Subjects in 14 CFR Part 39

Air transportation, Aircraft, Aviation safety, Incorporation by reference, Safety.

Adoption of the Amendment

Accordingly, under the authority delegated to me by the Administrator, the FAA amends 14 CFR part 39 as follows:

PART 39—AIRWORTHINESS DIRECTIVES

■ 1. The authority citation for part 39 continues to read as follows:

Authority: 49 U.S.C. 106(g), 40113, 44701.

§ 39.13 [Amended]

■ 2. The FAA amends § 39.13 by adding the following new AD:

2012–06–10 Airbus: Amendment 39–16991. Docket No. FAA–2012–0292; Directorate Identifier 2011–NM–056–AD.

(a) Effective Date

This airworthiness directive (AD) becomes effective April 16, 2012.

(b) Affected ADs

None.

(c) Applicability

This AD applies to the Airbus airplanes, certificated in any category, identified in paragraphs (c)(1) and (c)(2) of this AD.

(1) Model A330–201, –202, –203, –223, –243, –301, –302,–303, –321, –322, –323, –341, –342, and –343 airplanes, manufacturer serial numbers 0895, 0898 through 0900 inclusive, 0903 through 0909 inclusive, 0911, 0913 through 0916 inclusive, 0918 through 0920 inclusive, 0922, 0923, 0926, 0927, 0930 through 0932 inclusive, 0934 through 0936 inclusive, 0940, and 0951.

(2) Model A340–541 and –642 airplanes, manufacturer serial numbers 0846, 0848, 0894, 0897, 0902, 0910, 0912, 0917, and 0929.

(d) Subject

Air Transport Association (ATA) of America Code 53: Fuselage.

(e) Reason

This AD was prompted by reports of cracked nuts detected during production. We are issuing this AD to detect and correct cracked or missing nuts, and replace all affected nuts in multiple locations (including fuel tank areas) that could result in reduced structural integrity of the airplane.

(f) Compliance

You are responsible for having the actions required by this AD performed within the compliance times specified, unless the actions have already been done.

(g) Inspection and Corrective Action in Fuel Tank Areas

For nuts having part number (P/N) ASNA2531–4, located in fuel tank areas overcoated with sealant: Within 144 months since first flight of the airplane or 6 months after the effective date of this AD, whichever comes later, do a detailed inspection for missing or cracked nuts having P/N ASNA2531–4, located in fuel tank areas overcoated with sealant, in accordance with the Accomplishment Instructions of Airbus Mandatory Service Bulletin A330–53–3183, excluding Appendices 01 and 02, dated September 30, 2010 (for Model A330–200 and –300 series airplanes); or Airbus Mandatory Service Bulletin A340–53–5056, excluding Appendices 01 and 02, dated October 7, 2010 (for Model A340–500 and –600 series airplanes).

(1) If any nut is found missing: Before further flight, repair the condition according to a method approved by the Manager, International Branch, ANM–116, Transport Airplane Directorate, FAA; or EASA (or its delegated agent).

(2) If any nut is found cracked: Before further flight, replace the cracked nuts with new nuts having the same part number, in accordance with the Accomplishment Instructions of Airbus Mandatory Service Bulletin A330–53–3183, excluding Appendices 01 and 02, dated September 30, 2010 (for Model A330–200 and –300 series airplanes); or Airbus Mandatory Service Bulletin A340–53–5056, excluding Appendices 01 and 02, dated October 7, 2010 (for Model A340–500 and –600 series airplanes).

(3) For any nut that is neither missing nor cracked: Before further flight, replace nut with a new nut having the same part number, in accordance with the Accomplishment Instructions of Airbus Mandatory Service Bulletin A330–53–3183, excluding Appendices 01 and 02, dated September 30, 2010 (for Model A330–200 and –300 series airplanes); or Airbus Mandatory Service Bulletin A340–53–5056, excluding Appendices 01 and 02, dated October 7, 2010 (for Model A340–500 and –600 series airplanes).

(g) Inspection and Corrective Action in Fuel Tank Areas

For nuts having part number (P/N) ASNA2531–4, located in fuel tank areas overcoated with sealant: Within 144 months since first flight of the airplane or 6 months after the effective date of this AD, whichever comes later, do a detailed inspection for missing or cracked nuts having P/N ASNA2531–4, located in fuel tank areas overcoated with sealant, in accordance with the Accomplishment Instructions of Airbus Mandatory Service Bulletin A330–53–3183, excluding Appendices 01 and 02, dated September 30, 2010 (for Model A330–200 and –300 series airplanes); or Airbus Mandatory Service Bulletin A340–53–5056, excluding Appendices 01 and 02, dated October 7, 2010 (for Model A340–500 and –600 series airplanes).

(1) If any nut is found missing: Before further flight, repair the condition according to a method approved by the Manager, International Branch, ANM–116, Transport Airplane Directorate, FAA; or EASA (or its delegated agent).

(2) If any nut is found cracked: Before further flight, replace the cracked nuts with new nuts having the same part number, in accordance with the Accomplishment Instructions of Airbus Mandatory Service Bulletin A330–53–3183, excluding Appendices 01 and 02, dated September 30, 2010 (for Model A330–200 and –300 series airplanes); or Airbus Mandatory Service Bulletin A340–53–5056, excluding Appendices 01 and 02, dated October 7, 2010 (for Model A340–500 and –600 series airplanes).

(3) For any nut that is neither missing nor cracked: Before further flight, replace nut with a new nut having the same part number, in accordance with the Accomplishment Instructions of Airbus Mandatory Service Bulletin A330–53–3183, excluding Appendices 01 and 02, dated September 30, 2010 (for Model A330–200 and –300 series airplanes); or Airbus Mandatory Service Bulletin A340–53–5056, excluding Appendices 01 and 02, dated October 7, 2010 (for Model A340–500 and –600 series airplanes).

(h) Inspection and Corrective Action in Areas Other Than Fuel Tank Areas

For nuts having P/N ASNA2531–4 not located in fuel tank areas: Within 72 months since first flight of airplane or 6 months after the effective date of this AD, whichever comes later, do a detailed inspection for missing or cracked nuts, in accordance with the Accomplishment Instructions of Airbus Mandatory Service Bulletin A330–53–3183, excluding Appendices 01 and 02, dated September 30, 2010 (for Model A330–200 and –300 series airplanes); or Airbus Mandatory Service Bulletin A340–53–5056, excluding Appendices 01 and 02, dated October 7, 2010 (for Model A340–500 and –600 series airplanes).

(1) If any nut is found missing: Before further flight, repair the condition according to a method approved by the Manager, International Branch, ANM–116; or EASA (or its delegated agent).

(2) If any nut is found cracked: Before further flight, replace that nut with a new nut having the same part number, in accordance with the Accomplishment Instructions of Airbus Mandatory Service Bulletin A330–53–3183, excluding Appendices 01 and 02, dated September 30, 2010 (for Model A330–200 and –300 series airplanes); or Airbus Mandatory Service Bulletin A340–53–5056, excluding Appendices 01 and 02, dated October 7, 2010 (for Model A340–500 and –600 series airplanes).

(3) For any nut that is neither missing nor cracked: Before further flight, replace that nut with a new nut having the same part number, in accordance with the Accomplishment Instructions of Airbus Mandatory Service Bulletin A330–53–3183, excluding Appendices 01 and 02, dated September 30, 2010 (for Model A330–200 and –300 series airplanes); or Airbus Mandatory Service Bulletin A340–53–5056, excluding Appendices 01 and 02, dated October 7, 2010 (for Model A340–500 and –600 series airplanes).

(i) Other FAA AD Provisions

The following provisions also apply to this AD:

(1) *Alternative Methods of Compliance (AMOCs):* The Manager, ANM–116, International Branch, has the authority to approve AMOCs for this AD, if requested using the procedures found in 14 CFR 39.19. In accordance with 14 CFR 39.19, send your request to your principal inspector or local Flight Standards District Office, as appropriate. If sending information directly to the International Branch, send it to ATTN: Vladimir Ulyanov, Aerospace Engineer, International Branch, ANM–116, Transport Airplane Directorate, FAA, 1601 Lind Avenue SW., Renton, Washington 98057–3356; telephone (425) 227–1138; fax (425) 227–1149. Information may be emailed to: *9-ANM-116-AMOC-REQUESTS@faa.gov.* Before using any approved AMOC, notify your appropriate principal inspector, or lacking a principal inspector, the manager of the local flight standards district office/certificate holding district office. The AMOC approval letter must specifically reference this AD.

(2) *Airworthy Product:* For any requirement in this AD to obtain corrective actions from a manufacturer or other source, use these actions if they are FAA-approved. Corrective actions are considered FAA-approved if they are approved by the State of Design Authority (or their delegated agent). You are required to assure the product is airworthy before it is returned to service.

(j) Related Information

Refer to Mandatory Continuing Airworthiness Information (MCAI) European Aviation Safety Agency (EASA) Airworthiness Directive 2010–0252, dated November 29, 2010, and the service information identified in paragraphs (k)(1) and (k)(2) of this AD for related information.

(1) Airbus Mandatory Service Bulletin A330–53–3183, excluding Appendices 01 and 02, dated September 30, 2010.

(2) Airbus Mandatory Service Bulletin A340–53–5056, excluding Appendices 01 and 02, dated October 7, 2010.

(k) Material Incorporated by Reference

(1) You must use the following service information to do the actions required by this AD, unless the AD specifies otherwise. The Director of the Federal Register approved the incorporation by reference (IBR) of the following service information under 5 U.S.C. 552(a) and 1 CFR part 51:

(i) Airbus Mandatory Service Bulletin A330–53–3183, excluding Appendices 01 and 02, dated September 30, 2010.

(ii) Airbus Mandatory Service Bulletin A340–53–5056, excluding Appendices 01 and 02, dated October 7, 2010.

(2) For service information identified in this AD, contact Airbus SAS—Airworthiness Office—EAL, 1 Rond Point Maurice Bellonte, 31707 Blagnac Cedex, France; telephone +33 5 61 93 36 96; fax +33 5 61 93 45 80; email *airworthiness.A330-A340@airbus.com;* Internet *http://www.airbus.com,*

(3) You may review copies of the service information at the FAA, Transport Airplane Directorate, 1601 Lind Avenue SW., Renton, Washington. For information on the availability of this material at the FAA, call 425–227–1221.

(4) You may also review copies of the service information that is incorporated by reference at the National Archives and Records Administration (NARA). For information on the availability of this material at NARA, call 202–741–6030, or go to: *http://www.archives.gov/federal_register/code_of_federal_regulations/ibr_locations.html.*

Issued in Renton, Washington, on March 8, 2012.

Ali Bahrami,

Manager, Transport Airplane Directorate, Aircraft Certification Service.

[FR Doc. 2012–7008 Filed 3–29–12; 8:45 am]

BILLING CODE 4910–13–P

DEPARTMENT OF TRANSPORTATION

Federal Aviation Administration

14 CFR Part 39

[Docket No. FAA–2011–1164; Directorate Identifier 2011–NM–084–AD; Amendment 39–17002; AD 2012–06–21]

RIN 2120–AA64

Airworthiness Directives; DASSAULT AVIATION Airplanes

AGENCY: Federal Aviation Administration (FAA), Department of Transportation (DOT).

ACTION: Final rule.

SUMMARY: We are adopting a new airworthiness directive (AD) for all DASSAULT AVIATION Model MYSTERE-FALCON 900 airplanes. This AD was prompted by multiple reports of fuel leakage from a defective fuel high-level sensor located in the wing front spar. This AD requires inspecting to determine fuel quantity sensors part numbers and replacing of certain fuel quantity sensors with new fuel quantity sensors. We are issuing this AD to prevent internal fuel leakage with significant fuel vapors, which could result in a fire hazard.

DATES: This AD becomes effective May 4, 2012.

The Director of the Federal Register approved the incorporation by reference of a certain publication listed in this AD as of May 4, 2012.

ADDRESSES: You may examine the AD docket on the Internet at *http://www.regulations.gov* or in person at the U.S. Department of Transportation, Docket Operations, M–30, West Building Ground Floor, Room W12–140, 1200 New Jersey Avenue SE., Washington, DC.

FOR FURTHER INFORMATION CONTACT: Tom Rodriguez, Aerospace Engineer, International Branch, ANM–116, Transport Airplane Directorate, FAA, 1601 Lind Avenue SW., Renton, Washington 98057–3356; telephone: (425) 227–1137; fax: (425) 227–1149.

SUPPLEMENTARY INFORMATION:

Discussion

We issued a notice of proposed rulemaking (NPRM) to amend 14 CFR part 39 to include an AD that would apply to the specified products. That NPRM was published in the **Federal Register** on November 4, 2011 (76 FR 68368). That NPRM proposed to correct an unsafe condition for the specified products. The MCAI states:

> Several Mystere-Falcon 900 aeroplanes experienced fuel leakage from a defective fuel high-level sensor located in the wing front spar.
>
> Investigations revealed that the leakage was due to a defective fuel quantity sensor Part Number (P/N) 722105–2.
>
> This condition, if not detected and corrected, could lead to an internal fuel leakage with significant fuel vapours, which could result in a fire hazard.
>
> To address this unsafe condition, Dassault Aviation have developed an improved fuel quantity sensor with a new concept of sealing.
>
> For the reasons described above, this [EASA] AD requires the identification of the affected sensors and replacement with the improved part.

You may obtain further information by examining the MCAI in the AD docket.

Comments

We gave the public the opportunity to participate in developing this AD. We received no comments on the NPRM (76 FR 68368, November 4, 2011) or on the determination of the cost to the public.

Conclusion

We reviewed the available data and determined that air safety and the public interest require adopting the AD as proposed, except for minor editorial changes. We have determined that these minor changes:

- Are consistent with the intent that was proposed in the NPRM (76 FR 68368, November 4, 2011) for correcting the unsafe condition; and
- Do not add any additional burden upon the public than was already proposed in the NPRM (76 FR 68368, November 4, 2011).

Costs of Compliance

We estimate that this AD will affect 110 products of U.S. registry. We also estimate that it will take about 4 work-hours per product to comply with the basic requirements of this AD. The average labor rate is $85 per work-hour. Required parts will cost about $4,000 per product. Where the service

information lists required parts costs that are covered under warranty, we have assumed that there will be no charge for these parts. As we do not control warranty coverage for affected parties, some parties may incur costs higher than estimated here. Based on these figures, we estimate the cost of this AD to the U.S. operators to be $477,400, or $4,340 per product.

Authority for This Rulemaking

Title 49 of the United States Code specifies the FAA's authority to issue rules on aviation safety. Subtitle I, section 106, describes the authority of the FAA Administrator. ''Subtitle VII: Aviation Programs,'' describes in more detail the scope of the Agency's authority.

We are issuing this rulemaking under the authority described in ''Subtitle VII, Part A, Subpart III, Section 44701: General requirements.'' Under that section, Congress charges the FAA with promoting safe flight of civil aircraft in air commerce by prescribing regulations for practices, methods, and procedures the Administrator finds necessary for safety in air commerce. This regulation is within the scope of that authority because it addresses an unsafe condition that is likely to exist or develop on products identified in this rulemaking action.

Regulatory Findings

We determined that this AD will not have federalism implications under Executive Order 13132. This AD will not have a substantial direct effect on the States, on the relationship between the national government and the States, or on the distribution of power and responsibilities among the various levels of government.

For the reasons discussed above, I certify that this AD:

1. Is not a ''significant regulatory action'' under Executive Order 12866;
2. Is not a ''significant rule'' under the DOT Regulatory Policies and Procedures (44 FR 11034, February 26, 1979);
3. Will not affect intrastate aviation in Alaska; and
4. Will not have a significant economic impact, positive or negative, on a substantial number of small entities under the criteria of the Regulatory Flexibility Act.

We prepared a regulatory evaluation of the estimated costs to comply with this AD and placed it in the AD docket.

Examining the AD Docket

You may examine the AD docket on the Internet at *http://www.regulations.gov;* or in person at the Docket Operations office between 9 a.m. and 5 p.m., Monday through Friday, except Federal holidays. The AD docket contains the NPRM (76 FR 68368, November 4, 2011), the regulatory evaluation, any comments received, and other information. The street address for the Docket Operations office (telephone (800) 647–5527) is in the **ADDRESSES** section. Comments will be available in the AD docket shortly after receipt.

List of Subjects in 14 CFR Part 39

Air transportation, Aircraft, Aviation safety, Incorporation by reference, Safety.

Adoption of the Amendment

Accordingly, under the authority delegated to me by the Administrator, the FAA amends 14 CFR part 39 as follows:

PART 39—AIRWORTHINESS DIRECTIVES

■ 1. The authority citation for part 39 continues to read as follows:

Authority: 49 U.S.C. 106(g), 40113, 44701.

§ 39.13 [Amended]

■ 2. The FAA amends § 39.13 by adding the following new AD:

2012–06–21 DASSAULT AVIATION: Amendment 39–17002. Docket No. FAA–2011–1164; Directorate Identifier 2011–NM–084–AD.

(a) Effective Date

This airworthiness directive (AD) becomes effective May 4, 2012.

(b) Affected ADs

None.

(c) Applicability

This AD applies to DASSAULT AVIATION Model MYSTERE-FALCON 900 airplanes, certificated in any category, all serial numbers.

(d) Subject

Air Transport Association (ATA) of America Code 28: Fuel.

(e) Reason

This AD was prompted by multiple reports of fuel leakage from a defective fuel high-level sensor located in the wing front spar. We are issuing this AD to prevent internal fuel leakage with significant fuel vapors, which could result in a fire hazard.

(f) Compliance

You are responsible for having the actions required by this AD performed within the compliance times specified, unless the actions have already been done.

(g) Part Identification and Replacement

Within 440 flight hours or 9 months after the effective date of this AD, whichever occurs first, do the actions specified in paragraphs (g)(1) and (g)(2) of this AD.

(1) Inspect the fuel quantity sensors to determine whether part number (P/N) 722105–2 is installed.

(2) Replace all P/N 722105–2 fuel quantity sensors with new P/N 722105–3 fuel quantity sensors, in accordance with the Accomplishment Instructions of Dassault Mandatory Service Bulletin F900–410, dated December 20, 2010.

(h) Parts Installation

As of the effective date of this AD, no person may install a fuel quantity sensor having P/N 722105–2 on any airplane.

(i) Other FAA AD Provisions

The following provisions also apply to this AD:

(1) *Alternative Methods of Compliance (AMOCs):* The Manager, International Branch, ANM–116, Transport Airplane Directorate, FAA, has the authority to approve AMOCs for this AD, if requested using the procedures found in 14 CFR 39.19. In accordance with 14 CFR 39.19, send your request to your principal inspector or local Flight Standards District Office, as appropriate. If sending information directly to the International Branch, send it to ATTN: Tom Rodriguez, Aerospace Engineer, International Branch, ANM–116, Transport Airplane Directorate, FAA, 1601 Lind Avenue SW., Renton, Washington 98057–3356; telephone: (425) 227–1137; fax: 425–227–1149. Information may be emailed to: *9-ANM-116-AMOC-REQUESTS@faa.gov.* Before using any approved AMOC, notify your appropriate principal inspector, or lacking a principal inspector, the manager of the local flight standards district office/certificate holding district office. The AMOC approval letter must specifically reference this AD.

(2) *Airworthy Product:* For any requirement in this AD to obtain corrective actions from a manufacturer or other source, use these actions if they are FAA-approved. Corrective actions are considered FAA-approved if they are approved by the State of Design Authority (or their delegated agent). You are required to assure the product is airworthy before it is returned to service.

(j) Related Information

Refer to MCAI European Aviation Safety Agency Airworthiness Directive 2011–0049, dated March 21, 2011; and Dassault Mandatory Service Bulletin F900–410, dated December 20, 2010; for related information.

(k) Material Incorporated by Reference

(1) You must use the following service information to do the actions required by this AD, unless the AD specifies otherwise. The Director of the Federal Register approved the incorporation by reference (IBR) of the following service information under 5 U.S.C. 552(a) and 1 CFR part 51:

(i) Dassault Mandatory Service Bulletin F900–410, dated December 20, 2010.

(2) For DASSAULT AVIATION service information identified in this AD, contact Dassault Falcon Jet, P.O. Box 2000, South Hackensack, New Jersey 07606; telephone 201–440–6700; Internet *http://www.dassaultfalcon.com.*

(3) You may review copies of the service information at the FAA, Transport Airplane Directorate, 1601 Lind Avenue SW., Renton, Washington. For information on the availability of this material at the FAA, call 425–227–1221.

(4) You may also review copies of the service information that is incorporated by reference at the National Archives and Records Administration (NARA). For information on the availability of this material at an NARA facility, call 202–741–6030, or go to *http://www.archives.gov/federal_register/code_of_federal_regulations/ibr_locations.html.*

Issued in Renton, Washington, on March 19, 2012.

Ali Bahrami,

Manager, Transport Airplane Directorate, Aircraft Certification Service.

[FR Doc. 2012–7372 Filed 3–29–12; 8:45 am]

BILLING CODE 4910–13–P

DEPARTMENT OF TRANSPORTATION

Federal Aviation Administration

14 CFR Part 71

[Docket No. FAA–2011–0590; Airspace Docket No. 11–ASO–25]

Establishment of Class E Airspace; Marion, AL

AGENCY: Federal Aviation Administration (FAA), DOT.

ACTION: Final rule.

SUMMARY: This action establishes Class E Airspace at Marion, AL, to accommodate the new Area Navigation (RNAV) Global Positioning System (GPS) Standard Instrument Approach Procedures serving Vaiden Field. This action enhances the safety and airspace management of Instrument Flight Rules (IFR) operations within the National Airspace System.

DATES: Effective 0901 UTC, May 31, 2012. The Director of the Federal Register approves this incorporation by reference action under title 1, Code of Federal Regulations, part 51, subject to the annual revision of FAA Order 7400.9 and publication of conforming amendments.

FOR FURTHER INFORMATION CONTACT: John Fornito, Operations Support Group, Eastern Service Center, Federal Aviation Administration, P.O. Box 20636, Atlanta, Georgia 30320; telephone (404) 305–6364.

SUPPLEMENTARY INFORMATION:

History

On January 6, 2012, the FAA published in the **Federal Register** a notice of proposed rulemaking (NPRM) to establish Class E airspace at Marion, AL (77 FR 771) Docket No. FAA–2011–0590. Interested parties were invited to participate in this rulemaking effort by submitting written comments on the proposal to the FAA. No comments were received. Class E airspace designations are published in paragraph 6005 of FAA Order 7400.9V dated August 9, 2011, and effective September 15, 2011, which is incorporated by reference in 14 CFR 71.1. The Class E airspace designations listed in this document will be published subsequently in the Order.

The Rule

This amendment to Title 14, Code of Federal Regulations (14 CFR) part 71 establishes Class E airspace extending upward from 700 feet above the surface at Marion, AL, to provide the controlled airspace required to accommodate the new RNAV GPS Standard Instrument Approach Procedures developed for Vaiden Field. This action is necessary for the safety and management of IFR operations at the airport.

The FAA has determined that this regulation only involves an established body of technical regulations for which frequent and routine amendments are necessary to keep them operationally current, is non-controversial and unlikely to result in adverse or negative comments. It, therefore, (1) is not a ''significant regulatory action'' under Executive Order 12866; (2) is not a ''significant rule'' under DOT Regulatory Policies and Procedures (44 FR 11034; February 26, 1979); and (3) does not warrant preparation of a Regulatory Evaluation as the anticipated impact is so minimal. Since this is a routine matter that will only affect air traffic procedures and air navigation, it is certified that this rule, when promulgated, will not have a significant economic impact on a substantial number of small entities under the criteria of the Regulatory Flexibility Act.

The FAA's authority to issue rules regarding aviation safety is found in Title 49 of the United States Code. Subtitle I, section 106 describes the authority of the FAA Administrator. Subtitle VII, Aviation Programs, describes in more detail the scope of the agency's authority.

This rulemaking is promulgated under the authority described in subtitle VII, part A, subpart I, section 40103. Under that section, the FAA is charged with prescribing regulations to assign the use of airspace necessary to ensure the safety of aircraft and the efficient use of airspace. This regulation is within the scope of that authority as it establishes controlled airspace at Vaiden Field, Marion, AL.

Lists of Subjects in 14 CFR Part 71

Airspace, Incorporation by reference, Navigation (air).

Adoption of the Amendment

In consideration of the foregoing, the Federal Aviation Administration amends 14 CFR Part 71 as follows:

PART 71—DESIGNATION OF CLASS A, B, C, D AND E AIRSPACE AREAS; AIR TRAFFIC SERVICE ROUTES; AND REPORTING POINTS

■ 1. The authority citation for Part 71 continues to read as follows:

Authority: 49 U.S.C. 106(g); 40103, 40113, 40120; E.O. 10854, 24 FR 9565, 3 CFR, 1959–1963 Comp., p. 389.

§ 71.1 [Amended]

■ 2. The incorporation by reference in 14 CFR 71.1 of Federal Aviation Administration Order 7400.9V, Airspace Designations and Reporting Points, dated August 9, 2011, effective September 15, 2011, is amended as follows:

Paragraph 6005 Class E airspace areas extending upward from 700 feet or more above the surface of the earth.

* * * * *

ASO AL E5 Marion, AL [New]

Vaiden Field, AL

(Lat. 32°30′38″ N., long. 87°23′05″ W.)

That airspace extending upward from 700 feet above the surface within a 7-mile radius of Vaiden Field.

Issued in College Park, Georgia, on March 14, 2012.

Barry A. Knight,

Manager, Operations Support Group, Eastern Service Center, Air Traffic Organization.

[FR Doc. 2012–6841 Filed 3–29–12; 8:45 am]

BILLING CODE 4910–13–P

DEPARTMENT OF TRANSPORTATION

Federal Aviation Administration

14 CFR Part 93

[Docket No. FAA–2011–1024]

High Density Traffic Airports; Notice of Determination Regarding Low Demand Periods at Ronald Reagan Washington National Airport

AGENCY: Department of Transportation, Federal Aviation Administration (FAA).

ACTION: Notice of agency determination.

SUMMARY: This action announces an FAA determination that 10 p.m. to 10:59 p.m. no longer is a low demand period at Ronald Reagan Washington National Airport (DCA). As a result of this

determination, the FAA will allocate available slots in that period on a temporary basis subject to recall, and the FAA may conduct a lottery in the future to allocate available slots in that period.

DATES: Effective March 30, 2012.

FOR FURTHER INFORMATION CONTACT: Robert Hawks, Office of the Chief Counsel, Federal Aviation Administration, 800 Independence Avenue SW., Washington, DC 20591; telephone number: 202–267–7143; fax number: 202–267–7971; email: *rob.hawks@faa.gov*.

SUPPLEMENTARY INFORMATION:

Background

The FAA issued the High Density Traffic Airports Rule (HDR), 14 CFR part 93 subpart K, in 1968 to reduce delays at five congested airports: John F. Kennedy International Airport, LaGuardia Airport, O'Hare International Airport, Ronald Reagan Washington National Airport (DCA), and Newark Liberty International Airport.[1] Currently, the HDR applies only to DCA. The regulation limits the number of operations during certain hours of the day and requires a slot, which the FAA allocates for a specific 60-minute period, for each scheduled operation.

In 1985, the FAA issued part 93 subpart S (the ''Buy/Sell Rule'').[2] As part of the Buy/Sell Rule, § 93.226 permits the administrative allocation of slots during low demand periods, which are 6 a.m. to 6:59 a.m. (the 0600 hour) and 10 p.m. to 11:59 p.m. (the 2200 and 2300 hours), on a first come, first served basis. Section 93.226(d) permits the FAA to determine those periods are no longer low demand periods and allocate any available slots by lottery under § 93.225. The FAA may make this determination when it becomes apparent that demand for slots is increasing to the point where a first come, first served allocation procedure is inappropriate. The FAA previously determined the 0600 hour is not a low demand period.[3]

FAA Determination

Currently, the FAA has allocated all but three commuter and all but three air carrier slots in the 2200 hour.

Because of the relatively small number of available slots in the 2200 hour, the FAA now determines that hour no longer is a low demand period. Additional permanent allocation of slots in that time period would undermine the new entrant and limited incumbent allocation priority under § 93.225. The FAA no longer will allocate slots during that time period on a permanent first come, first served basis.

The FAA further determines the present demand for available slots does not justify conducting a lottery at this time. Accordingly, the FAA will allocate slots in the 2200 hour on a temporary basis subject to recall by the FAA under § 93.226(e). However, if the FAA cannot accommodate future requests for slots, especially requests by new entrants or limited incumbents, through temporary allocations, the FAA may recall any temporarily allocated slots and conduct a lottery at that time.

Slots currently allocated are unaffected by this determination, and the HDR continues to apply to all allocated slots.

Issued in Washington, DC, on March 27, 2012.

Rebecca B. MacPherson,

Assistant Chief Counsel for Regulations.

[FR Doc. 2012–7742 Filed 3–29–12; 8:45 am]

BILLING CODE 4910–13–P

[1] 33 FR 17896 (Dec. 3, 1968).

[2] 50 FR 52195 (Dec. 20, 1985).

[3] 76 FR 58393 (Sept. 21, 2011).

SECURITIES AND EXCHANGE COMMISSION

17 CFR Part 232

[Release Nos. 33–9303; 34–66654; 39–2483; IC–30008]

Adoption of Updated EDGAR Filer Manual

AGENCY: Securities and Exchange Commission.

ACTION: Final rule.

SUMMARY: The Securities and Exchange Commission (the Commission) is adopting revisions to the Electronic Data Gathering, Analysis, and Retrieval System (EDGAR) Filer Manual to reflect updates to the EDGAR system. The revisions are being made primarily to support the upgrade to the 2012 US GAAP and 2012 Mutual Fund Risk/Return Summary Taxonomies; to support period field validation updates for the submission of Form N–PX; to remove the OMB expiration date from Form D, 3, 4, and 5; and to include additional filer support fax numbers on various EDGAR Filer Management Web site screens. The EDGAR system is scheduled to be upgraded to support this functionality on March 26, 2012.

The filer manual is also being revised to support the retirement of the DOS based Form N–SAR application and the introduction of the new online Form N–SAR application. The EDGAR system is scheduled to be upgraded to support this functionality on July 9, 2012.

DATES: *Effective Date:* March 30, 2012. The incorporation by reference of the EDGAR Filer Manual is approved by the Director of the Federal Register as of March 30, 2012.

FOR FURTHER INFORMATION CONTACT: In the Division of Corporation Finance, for questions Forms D, 3, 4, and 5 contact Heather Mackintosh, Office of Information Technology, at (202) 551–3600; in the Division of Investment Management for questions regarding Form N–PX contact Ruth Armfield Sanders, Senior Special Counsel, Office of Legal and Disclosure, at (202) 551–6989, and for questions concerning the modernized on-line Form N–SAR application, contact Heather Fernandez or Gregg Jaffray, Office of Financial Analysis, at (202) 551–6703; in the Division of Risk, Strategy, and Financial Innovation for questions concerning XBRL Taxonomies update contact Walter Hamscher, at (202) 551–5397; in the Division of Trading and Markets for questions regarding new filer support fax numbers contact Catherine Moore, Special Counsel, Office of Clearance and Settlement, at (202) 551–5718; and in the Office of Information Technology, contact Rick Heroux, at (202) 551–8800.

SUPPLEMENTARY INFORMATION: We are adopting an updated EDGAR Filer Manual, Volume I and Volume II. The Filer Manual describes the technical formatting requirements for the preparation and submission of electronic filings through the EDGAR system.[1] It also describes the requirements for filing using EDGARLink Online and the Online Forms/XML Web site.

The revisions to the Filer Manual reflect changes within Volume I entitled EDGAR Filer Manual, Volume I: ''General Information,'' Version 12 (March 2012) and Volume II entitled EDGAR Filer Manual, Volume II: ''EDGAR Filing,'' Version 19 (March 2012). The updated manual will be incorporated by reference into the Code of Federal Regulations.

The Filer Manual contains all the technical specifications for filers to submit filings using the EDGAR system. Filers must comply with the applicable provisions of the Filer Manual in order to assure the timely acceptance and processing of filings made in electronic

[1] We originally adopted the Filer Manual on April 1, 1993, with an effective date of April 26, 1993. Release No. 33–6986 (April 1, 1993) [58 FR 18638]. We implemented the most recent update to the Filer Manual on Nov. 29, 2011. *See* Release No. 33–9281 (Nov. 22, 2011) [76 FR 73506].

format.[2] Filers may consult the Filer Manual in conjunction with our rules governing mandated electronic filing when preparing documents for electronic submission.[3]

The EDGAR system will be upgraded to Release 12.0 on March 26, 2012 and will introduce the following changes: EDGAR will be updated to support the US GAAP 2012 Taxonomy and Mutual Fund Risk/Return Summary 2012 Taxonomy. Please see *http://sec.gov/info/edgar/edgartaxonomies.shtml* for a complete listing of supported standard taxonomies.

The Period field validations will be updated for the submission types N–PX–NT, N–PX–VR, N–PX–CR, and their amendments. Currently, these submission types only allow June 30 or September 30 of the current or prior years as valid period date. The Period field on these submission form types can be any valid date other than a future date.

The OMB expiration date will no longer be displayed on the Forms 3, 4, 5, and D. These forms will continue to display other OMB Approval information.

The Confirmation and Acknowledgement screens on the EDGAR Filer Management Web site, which currently display the filer support fax numbers, will be updated to include Division of Investment Management and Division of Trading and Markets filer support fax numbers along with existing Division of Corporation Finance fax numbers.

On July 9, 2012, EDGAR Release 12.1.1 will be deployed to convert the DOS based Form N–SAR application to an online application. The DOS based application to create Form N–SAR documents will be retired as of 5:30, July 6, 2012, and EDGAR will no longer accept filings created by that application. Beginning Monday, July 9, 2012, Form N–SAR may only be filed using the online version of the form available on the EDGAR Filing Web site or constructed by filers according to the new EDGAR N–SAR XML Technical Specification, available on the Commission's public Web site's ''Information for EDGAR Filers'' Web page (*http://www.sec.gov/info/edgar.shtml*). Submission form types NSAR–A, NSAR–A/A, NSAR–AT, NSAR–AT/A, NSAR–B, NSAR–BT, NSAR–BT/A, NSAR–U, and NSAR–U/A can be accessed by selecting the 'File Form N–SAR' link on the EDGAR Filing Web site. Filers submitting submission type NSAR–U should continue to prepare the text document with the applicable answers and attach it to the NSAR–U submission type accessible from the 'File Form N–SAR' link on the EDGAR Filing Web site.

Instructions to file Form N–SAR will be included in two new sections of Chapter 9 (Preparing and Transmitting Online Submissions) of the EDGAR Filer Manual, Volume II: EDGAR Filing, Section 9.2.5 (File Form N–SAR) and Section 9.2.6 (Completing a Form N–SAR Submission). As of July 9, 2012, the EDGAR Filer Manual, Volume III: N–SAR Supplement will be retired.

Along with the adoption of the Filer Manual, we are amending Rule 301 of Regulation S–T to provide for the incorporation by reference into the Code of Federal Regulations of today's revisions. This incorporation by reference was approved by the Director of the Federal Register in accordance with 5 U.S.C. 552(a) and 1 CFR part 51.

You may obtain paper copies of the updated Filer Manual at the following address: Public Reference Room, U.S. Securities and Exchange Commission, 100 F Street NE., Room 1543, Washington, DC 20549, on official business days between the hours of 10 a.m. and 3 p.m. We will post electronic format copies on the Commission's Web site; the address for the Filer Manual is *http://www.sec.gov/info/edgar.shtml.*

Since the Filer Manual relates solely to agency procedures or practice, publication for notice and comment is not required under the Administrative Procedure Act (APA).[4] It follows that the requirements of the Regulatory Flexibility Act[5] do not apply.

The effective date for the updated Filer Manual and the rule amendments is March 30, 2012. In accordance with the APA,[6] we find that there is good cause to establish an effective date less than 30 days after publication of these rules. The EDGAR system upgrade to Release 12.0 is scheduled to become available on March 26, 2012. The EDGAR system upgrade to Release 12.1.1 is scheduled to become available on July 9, 2012. The Commission believes that establishing an effective date less than 30 days after publication of these rules is necessary to coordinate the effectiveness of the updated Filer Manual with the system upgrade.

Statutory Basis

We are adopting the amendments to Regulation S–T under Sections 6, 7, 8, 10, and 19(a) of the Securities Act of 1933,[7] Sections 3, 12, 13, 14, 15, 23, and 35A of the Securities Exchange Act of 1934,[8] Section 319 of the Trust Indenture Act of 1939,[9] and Sections 8, 30, 31, and 38 of the Investment Company Act of 1940.[10]

List of Subjects in 17 CFR Part 232

Incorporation by reference, Reporting and recordkeeping requirements, Securities.

Text of the Amendment

In accordance with the foregoing, Title 17, Chapter II of the Code of Federal Regulations is amended as follows:

PART 232—REGULATION S–T—GENERAL RULES AND REGULATIONS FOR ELECTRONIC FILINGS

■ 1. The authority citation for Part 232 continues to read in part as follows:

Authority: 15 U.S.C. 77f, 77g, 77h, 77j, 77s(a), 77z–3, 77sss(a), 78c(b), 78*l,* 78m, 78n, 78o(d), 78w(a), 78*ll,* 80a–6(c), 80a–8, 80a–29, 80a–30, 80a–37, and 7201 *et seq.;* and 18 U.S.C. 1350.

* * * * *

■ 2. Section 232.301 is revised to read as follows:

§ 232.301 EDGAR Filer Manual.

Filers must prepare electronic filings in the manner prescribed by the EDGAR Filer Manual, promulgated by the Commission, which sets out the technical formatting requirements for electronic submissions. The requirements for becoming an EDGAR Filer and updating company data are set forth in the updated EDGAR Filer Manual, Volume I: ''General Information,'' Version 12 (March 2012). The requirements for filing on EDGAR are set forth in the updated EDGAR Filer Manual, Volume II: ''EDGAR Filing,'' Version 19 (March 2012). All of these provisions have been incorporated by reference into the Code of Federal Regulations, which action was approved by the Director of the Federal Register in accordance with 5 U.S.C. 552(a) and 1 CFR part 51. You must comply with these requirements in order for documents to be timely received and accepted. You can obtain paper copies of the EDGAR Filer Manual from the following address: Public Reference

[2] *See* Rule 301 of Regulation S–T (17 CFR 232.301).

[3] *See* Release No. 33–9281 (Nov. 22, 2011) [76 FR 73506] in which we implemented EDGAR Release 11.3. For additional history of Filer Manual rules, please see the cites therein.

[4] 5 U.S.C. 553(b).

[5] 5 U.S.C. 601–612.

[6] 5 U.S.C. 553(d)(3).

[7] 15 U.S.C. 77f, 77g, 77h, 77j, and 77s(a).

[8] 15 U.S.C. 78c, 78*l,* 78m, 78n, 78o, 78w, and 78*ll.*

[9] 15 U.S.C. 77sss.

[10] 15 U.S.C. 80a–8, 80a–29, 80a–30, and 80a–37.

Room, U.S. Securities and Exchange Commission, 100 F Street NE., Room 1543, Washington, DC 20549, on official business days between the hours of 10 a.m. and 3 p.m. Electronic copies are available on the Commission's Web site. The address for the Filer Manual is *http://www.sec.gov/info/edgar.shtml.* You can also inspect the document at the National Archives and Records Administration (NARA). For information on the availability of this material at NARA, call 202–741–6030, or go to: *http://www.archives.gov/federal_register/code_of_federal_regulations/ibr_locations.html.*

By the Commission.

Dated: March 26, 2012.

Elizabeth M. Murphy,

Secretary.

[FR Doc. 2012–7608 Filed 3–29–12; 8:45 am]

BILLING CODE 8011–01–P

SOCIAL SECURITY ADMINISTRATION

20 CFR Part 410

[Docket No. SSA–2012–0012]

RIN 0960–AH48

Removal of Regulations on Black Lung Benefits

AGENCY: Social Security Administration.

ACTION: Final rule.

SUMMARY: This final rule removes regulations on the Black Lung program from the Social Security Administration's (SSA) chapter of the Code of Federal Regulations (CFR). The Black Lung Consolidation of Administrative Responsibility Act transferred the responsibility for administering Part B of the Black Lung benefits program from SSA to the Department of Labor (DOL), and we are removing the regulations in recognition of the fact that we are no longer responsible for administering any aspect of the Part B Black Lung program. DOL concurs with this final rule removing the regulations.

DATES: This final rule is effective March 30, 2012.

FOR FURTHER INFORMATION CONTACT: Martin Sussman, Social Security Administration, Office of Regulations, 6401 Security Boulevard, Baltimore, MD 21235–6401, (410) 965–1767. For information on eligibility or filing for benefits, call our national toll-free number, 1–800–772–1213 or TTY 1–800–325–0778, or visit our Internet site, Social Security Online, at *http://www.socialsecurity.gov.*

SUPPLEMENTARY INFORMATION:

Brief History of SSA's Portion of the Black Lung Part B Program

The Federal Coal Mine Health and Safety Act (FMHSA) of 1969 established the Black Lung program to pay monthly benefits to coal miners, their survivors, and dependents if the miner was disabled by or died due to pneumoconiosis. The FMHSA, as amended, established two program parts. Part B, administered by SSA, governs miners' and survivors' claims filed through June 30, 1973. For those claims awarded, Part B also governs claims filed by certain survivors of these beneficiaries. Part C, administered by DOL, governs all other claims. In 2002, Congress enacted the Black Lung Consolidation of Administrative Responsibility Act (Pub. L. 107–275), which formally transferred all responsibility for administering the Black Lung program to DOL beginning January 31, 2003.

Thus, because we no longer have responsibility for administering the Black Lung Part B program, we are removing the pertinent regulations from our chapter of the CFR. DOL concurs with this final rule removing these regulations from our chapter of the CFR, and concurs that this action does not affect the substantive rights of individuals claiming benefits under the Black Lung Part B program.

Regulatory Procedures

We follow the Administrative Procedure Act (APA) rulemaking procedures specified in 5 U.S.C. 553 when we develop regulations. Generally, the APA requires that an agency provide prior notice and opportunity for public comment before issuing a final rule. The APA provides exceptions to its notice and public comment procedures when an agency finds good cause for dispensing with such procedures because they are impracticable, unnecessary, or contrary to the public interest.[1]

We find that good cause exists for proceeding without prior public notice and comment in this instance. As discussed above, the change we are making in this final rule does not affect the substantive rights of individuals claiming benefits under the Black Lung Part B program. Rather, the change simply reflects Congress' decision in the Black Lung Consolidation of Administrative Responsibility Act to transfer responsibility for administration of the Black Lung Part B program from SSA to DOL. Accordingly, we find that prior public comment would be unnecessary in this instance.

In addition, for the reasons cited above, we also find good cause for dispensing with the 30-day delay in the effective date of this rule.[2] Since the change we are making to this rule merely recognizes that we are no longer responsible for administering any aspect of the Part B Black Lung program, we find that it is contrary to the public interest to delay the effective date of our rule. Accordingly, we are making this rule effective upon publication.

Executive Order 12866, as Supplemented by Executive Order 13563

We have consulted with the Office of Management and Budget (OMB) and determined that this final rule does not meet the criteria for a significant regulatory action under Executive Order 12866, as supplemented by Executive Order 13563. Thus, it was not subject to OMB review.

Regulatory Flexibility Act

We certify that this final rule will not have a significant economic impact on a substantial number of small entities, as it affects individuals only. Therefore, a regulatory flexibility analysis is not required under the Regulatory Flexibility Act, as amended.

Paperwork Reduction Act

This final rule imposes no reporting or recordkeeping requirements subject to OMB clearance.

Michael J. Astrue,

Commissioner of Social Security.

For the reasons set out in the preamble, under the authority of section 702(a)(5) of the Social Security Act, 42 U.S.C. 902(a)(5), and Public Law 107–275, we amend 20 CFR chapter III, part 410, as set forth below:

PART 410 [Removed]

■ 1. Remove part 410.

[FR Doc. 2012–7672 Filed 3–29–12; 8:45 am]

BILLING CODE 4191–02–P

[1] 5 U.S.C. 553(b)(B).

[2] *See* 5 U.S.C. 553(d)(3).

DEPARTMENT OF THE TREASURY

Internal Revenue Service

26 CFR Part 20

Estate Tax; Estates of Decedents Dying After August 16, 1954

CFR Correction

■ In Title 26 of the Code of Federal Regulations, Parts 2 to 29, revised as of April 1, 2011, on page 392, in § 20.2053–4, at the end of paragraph (c)(3), Examples 1–3 are added to read as follows:

§ 20.2053–4 Deduction for claims against the estate.

* * * * *

(c) * * *

(3) * * *

Example 1. There are three claims against the estate of the decedent (D) that are not paid and are not deductible under § 20.2053–1(d)(4) or paragraph (b) of this section: $25,000 of Claimant A, $35,000 of Claimant B, and $1,000,000 of Claimant C. The executor of D's estate (E) may not claim a deduction under this paragraph with respect to any portion of the claim of Claimant C because the value of that claim exceeds $500,000. E may claim a deduction under this paragraph for the total amount of the claims filed by Claimant A and Claimant B ($60,000) because the aggregate value of the full amount of those claims does not exceed $500,000.

Example 2. There are three claims against the estate of the decedent (D) that are not paid and are not deductible under § 20.2053–1(d)(4) or paragraph (b) of this section; specifically, a separate $200,000 claim of each of three claimants, A, B and C. The executor of D's estate (E) may claim a deduction under this paragraph for any two of these three claims because the aggregate value of the full amount of any two of the claims does not exceed $500,000. E may not deduct any part of the value of the remaining claim under this paragraph because the aggregate value of the full amount of all three claims would exceed $500,000.

Example 3. As a result of an automobile accident involving the decedent (D) and A, D's gross estate includes a claim against A that is valued at $750,000. In the same matter, A files a counterclaim against D's estate that is valued at $1,000,000. A's claim against D's estate is not paid and is not deductible under § 20.2053–1(d)(4). All other section 2053 claims and expenses of D's estate have been paid and are deductible. The executor of D's estate (E) deducts $750,000 of A's claim against the estate under § 20.2053–4(b). E may claim a deduction under this paragraph (c) for the total value of A's claim not deducted under § 20.2053–4(b), or $250,000. If, instead, the value of A's claim against D's estate is $1,500,000, so that the amount not deductible under § 20.2053–4(b) exceeds $500,000, no deduction is available under this paragraph (c).

* * * * *

[FR Doc. 2012–7819 Filed 3–29–12; 8:45 am]

BILLING CODE 1505–01–D

EQUAL EMPLOYMENT OPPORTUNITY COMMISSION

29 CFR Part 1625

RIN 3046–AA76

Disparate Impact and Reasonable Factors Other Than Age Under the Age Discrimination in Employment Act

AGENCY: Equal Employment Opportunity Commission.

ACTION: Final rule.

SUMMARY: The Equal Employment Opportunity Commission (''EEOC'' or ''Commission'') is issuing this final rule to amend its Age Discrimination in Employment Act (''ADEA'' or ''Act'') regulations concerning disparate-impact claims and the reasonable factors other than age defense (''RFOA''). The Commission published proposed rules in the **Federal Register** on March 31, 2008, and February 18, 2010, for sixty-day notice-and-comment periods. After consideration of the public comments, the Commission has revised portions of the proposed rules and is now issuing a final rule covering both proposals.

DATES: Effective April 30, 2012.

FOR FURTHER INFORMATION CONTACT: Dianna B. Johnston, Senior Attorney-Advisor, Aaron Konopasky, Attorney-Advisor, or Davis L. Kim, Attorney-Advisor, at (202) 663–4640 (voice) or (202) 663–7026 (TTY). (These are not toll free numbers). This final rule also is available in the following formats: Large print, Braille, audio tape and electronic file on computer disk. Requests for this notice in an alternative format should be made to the Publications Information Center at 1–800–669–3362 (voice) or 1–800–800–3302 (TTY).

SUPPLEMENTARY INFORMATION:

Background

On March 31, 2008, EEOC published in the **Federal Register** a Notice of Proposed Rulemaking (''NPRM'') to address issues related to the United States Supreme Court's decision in *Smith* v. *City of Jackson*.[1] 73 FR 16807, Mar. 31, 2008. The Court ruled that disparate-impact claims are cognizable under the Age Discrimination in Employment Act (''ADEA'')[2] but that liability is precluded when the impact is attributable to a reasonable factor other than age. The NPRM proposed to revise 29 CFR 1625.7(d) to state that an employment practice that has an adverse impact on individuals within the protected age group on the basis of older age is discriminatory unless the practice is justified by a ''reasonable factor other than age'' and that the individual challenging the allegedly unlawful employment practice bears the burden of isolating and identifying the specific employment practice responsible for the adverse impact. The Commission also proposed to revise 29 CFR 1625.7(e) to state that, when the RFOA exception is raised, the employer has the burden of showing that a reasonable factor other than age exists factually.

The NPRM sought public comments on the proposed rule and also invited comments on whether the Commission should provide more information on the meaning of ''reasonable factors other than age.'' Seven of the ten commenters clearly supported efforts to provide more information. One of the seven suggested that reasonable factors should be related to job requirements or job performance. One commenter who preferred that the EEOC not address the matter argued that, if the RFOA definition is subject to regulation, then EEOC should consult case law for a definition and should draft factors relevant to the RFOA determination. One commenter opposed efforts to provide more information on the meaning of RFOA.

As noted below, all commenters who addressed the proposed revision to 29 CFR 1625(d) supported it. Four commenters endorsed the proposal as written and two generally supported the section but suggested changes to the first sentence. For the reasons explained below, the final rule, which has been redesignated 1625.7(c), retains the proposal's substantive language.

Five commenters supported the proposed revision to 29 CFR 1625(e) and four opposed it. The commenters who opposed it argued that plaintiffs, not employers, should bear the RFOA burden of persuasion. As noted below, the final rule, which has been redesignated 1625.7(d), continues to place the burden of persuasion on the employer because the Supreme Court agreed that the employer has the RFOA burden of persuasion.[3]

Subsequently, on February 18, 2010, EEOC published in the **Federal Register** a second NPRM to address the meaning

[1] 544 U.S. 228 (2005).

[2] 29 U.S.C. 621–34.

[3] *Meacham* v. *Knolls Atomic Power Lab.,* 554 U.S. 84, 91–92 (2008).

of ''reasonable factors other than age.'' 75 FR 7212, Feb. 18, 2010. The Commission noted that, given public comments and the Supreme Court decisions in *Smith* and *Meacham,* it was issuing the NPRM ''before finalizing its regulations concerning disparate impact under the ADEA.'' The NPRM proposed to revise 29 CFR 1625.7(b) to state that the RFOA determination depends on the facts and circumstances of each specific situation. It defined a reasonable factor as one that is objectively reasonable when viewed from the position of a reasonable employer under like circumstances. It provided that the RFOA defense applies only if the challenged practice is not based on age. In addition, the NPRM provided non-exhaustive lists of factors relevant to whether an employment practice is reasonable and whether a factor is ''other than age.''

In response to the February 2010 NPRM, EEOC received 27 comments from groups and individuals and more than 2,300 facsimiles that were similar in form and content. Two commenters on the February 2010 NPRM suggested that the Commission issue a new NPRM if it made any changes to the material contained in the March 2008 NPRM. One of the two also suggested the publication of a new NPRM if the EEOC offered new justifications for the material contained in the February 2010 NPRM. The other commenter suggested that a new NPRM clarify whether the 2008 and 2010 documents should be read in conjunction.

The Commission does not believe that publication of a new NPRM is necessary. The Commission has considered all comments received in response to both notices of proposed rulemaking and has made appropriate changes to the proposed rules in response to those comments. This document sets out the revised paragraphs of §§ 1625.7(b) through (e). Because §§ 1625.7(a) and (f) remain unchanged, they are not reprinted herein.

Some commenters on the February 2010 NPRM, including those who submitted form facsimiles, expressed concern that the EEOC's approach to RFOA would place significant burdens on employers. They argued that the rule would lead to unwarranted scrutiny of business decisions, permit second-guessing of routine decisions, and make it harder for employers to defend against frivolous litigation. Other commenters thought that the rule presented a fair, workable approach to RFOA.

The ADEA and disparate-impact analysis by definition require some scrutiny of employer practices that disproportionately harm older workers. As the Supreme Court held, employers must prove that such practices are based on reasonable factors other than age once plaintiffs have identified a specific employment practice that has a significant disparate impact.[4] In holding that the RFOA is an affirmative defense, the Supreme Court recognized that scrutiny of employer decisions that cause an adverse impact is warranted, as employers must persuade ''factfinders that their choices are reasonable'' and that ''this will sometimes affect the way employers do business with their employees.'' [5]

The EEOC's proposed rule was designed to conform existing regulations to recent Supreme Court decisions and to provide guidance about the application of the RFOA affirmative defense. It was not intended to impose unwarranted burdens on employers. Nonetheless, the Commission recognizes that some commenters interpreted the proposed rule as imposing significant burdens by requiring employers to meet all of the factors relevant to the RFOA determination. As explained below, the Commission has revised the rule to clarify that the factors are not required elements or duties, but considerations that are manifestly relevant to determining whether an employer demonstrates the RFOA defense.

Some commenters argued that the proposed rule improperly imported Title VII standards into ADEA disparate-impact analysis and conflicted with the Supreme Court decisions in *Smith, Meacham,* and *Hazen Paper Co.* v. *Biggins.*[6] Other commenters believed that the proposed rule was consistent with the statute and relevant case law. The Commission, which disagrees with some commenters' interpretations of the statute and Supreme Court decisions, has addressed their comments in the context of specific sections of the rule. For the reasons explained below, the Commission believes that the rule is consistent with the ADEA and case law interpreting the statute. Where appropriate, the Commission has revised the rule to make this clearer.

Section-by-Section Analysis

Section 1625.7(b)

Former section 1625.7(c) has been redesignated 1625.7(b). The text of the paragraph remains unchanged.

[4] *Id.* at 96.

[5] *Id.* at 101.

[6] 507 U.S. 604 (1993).

Section 1625.7(c)

Section 1625.7(c) revises current section 1625.7(d). The 2008 proposed rule stated that any employment practice that has an age-based adverse impact on individuals within the protected age group is discriminatory unless the practice is justified by a reasonable factor other than age. It also stated that the individual challenging the practice is responsible for isolating and identifying the specific employment practice responsible for the adverse impact.

All of the commenters who addressed this section supported it. Four of them endorsed the section as written. Two of them generally supported the section but suggested changes to the first sentence. One commenter argued that the first sentence of the proposed rule inappropriately implied that the RFOA defense is the only defense applicable to disparate-impact claims under the ADEA. The commenter asserted that, although the *Smith* decision held that RFOA is an appropriate test for determining the lawfulness of an employment practice that has an age-based disparate impact, it did not hold that it was the only test. According to the commenter, section 4(f) [7] of the ADEA permits other practices that might have a disparate impact on members of the protected age group. The commenter did not offer examples of such practices or otherwise explain how other defenses might apply in the disparate-impact context.

The final rule, which has been redesignated 1625.7(c), retains the proposed language. The Supreme Court relied on the RFOA provision to conclude that the ADEA prohibits disparate-impact discrimination.[8] The Court's determination that ADEA disparate-impact claims are cognizable because of the RFOA provision logically leads to the conclusion that RFOA is the defense to such claims. As the Court explained in *Meacham,* the RFOA defense fits [9] as the appropriate defense

[7] 29 U.S.C. 623(f).

[8] *Smith,* 544 U.S. at 239.

[9] The applicability of a statutory defense to a claim depends on whether the defense appropriately responds to the facts raised. For example, the ''bona fide occupational qualification'' (''BFOQ'') defense in section 4(f)(1) applies to facially discriminatory policies, not to neutral practices. *See Meacham,* 554 U.S. at 92. The NPRMs proposed to revise section 1625.7 only, which is confined to the applicability of the RFOA defense and did not propose changes to other regulatory sections that apply to the ADEA's other affirmative defenses. *See, e.g.,* 29 CFR 1625.6 (BFOQ), 1625.8 (seniority systems), 1625.10 (employee benefit plans). The regulations do not preclude an employer from asserting any statutory defense that responds to a particular claim. It

Continued

to a disparate-impact claim because the age-neutral employment practice causing the unlawful impact is ''other than age'' and ''otherwise prohibited.'' [10]

Another commenter objected to the use of the term ''justified.'' The commenter asserted that the term is closely associated with Title VII's business-necessity test and that its use could cause confusion between the concepts of business necessity and RFOA. The final rule retains the term ''justified.'' Use of this term is consistent with the *Meacham* decision, which noted that the language of section 4(f)(1) ''refers to an excuse or justification for behavior that, standing alone, violates the statute's prohibition.'' [11] It is also consistent with 29 CFR 1625.7(b), the text of which has not been changed. The term ''justified'' designates the party who bears the burden of proof, not the content of the defense. There is no question that the RFOA standard is lower than the business-necessity standard, as the rule makes clear.

The Commission has simplified the language in the second sentence of paragraph 1625.7(c). The sentence now refers to the employment practice ''that allegedly causes'' statistical disparities rather than the employment practice ''that is allegedly responsible for'' the disparities.

Paragraph 1625.7(c) reflects the Supreme Court's conclusions that disparate-impact claims are cognizable under the ADEA, that the individual alleging disparate impact bears the burden of identifying the specific employment practice causing the alleged impact, and that the RFOA defense is the appropriate standard for determining the lawfulness of a practice that disproportionately affects older workers.[12]

Section 1625.7(d)

Section 1625.7(d) revises current section 1625.7(e). The proposed rule stated that, when the RFOA exception is raised, the employer has the burden of showing that a reasonable factor other than age exists factually. Five commenters supported the proposal, and four objected to placing the burden of proof on the employer. One commenter noted that the term ''exists factually'' was ambiguous and likely to lead to confusion.

Subsequently, in *Meacham* v. *Knolls Atomic Power Laboratory,* the Supreme Court confirmed that the employer defending an ADEA claim of disparate impact has the RFOA burden of proof, i.e., the burden of persuasion as well as production.[13] The Commission has revised the paragraph, which has been redesignated 1625.7(d), to reflect the Supreme Court's holding that the RFOA provision is an affirmative defense in disparate-impact cases for which the employer bears the burdens of production and persuasion. To avoid confusion, the Commission has deleted the phrase ''exists factually.''

The Commission also has revised the rule to clarify that the RFOA affirmative defense is unavailable in disparate-treatment cases. In *Smith,* the Court rejected the argument that the RFOA exemption acted simply as a ''safe harbor'' in disparate-treatment cases.[14] As the Supreme Court explained in *Smith,*[15] the ''other than age'' element of the RFOA provision makes the defense inapplicable to a claim conditioned on an age-based intent to discriminate.

Section 1625.7(e)

Section 1625.7(e) revises current section 1625.7(b). The proposed rule noted that whether a differentiation is based on reasonable factors other than age must be decided on the basis of all the particular facts and circumstances surrounding each individual situation. The final rule retains this language, which emphasizes that the RFOA determination involves a fact-intensive inquiry.[16] For organizational purposes, the Commission has changed the order of the sentences in the paragraph.

The proposed rule divided the discussion of ''reasonable factors other than age'' into two paragraphs, ''reasonable'' and ''factors other than age,'' and listed factors relevant to each paragraph. The ''reasonable'' paragraph noted that a reasonable factor is one that is objectively reasonable when viewed from the position of a reasonable employer (i.e., a prudent employer mindful of its responsibilities under the ADEA) under like circumstances. It stated that an employer must show that an employment practice was reasonably designed to achieve a legitimate business purpose and was administered in a way that reasonably achieves that purpose in light of the facts that were known or should have been known to the employer. It included a non-exhaustive list of factors relevant to whether an employment practice is reasonable.

The ''factors other than age'' paragraph noted that the RFOA defense applies only if the practice was not based on age. It stated that, in the typical disparate-impact case, the practice is based on an objective non-age factor and the only question is whether the practice is reasonable. The paragraph noted, however, that a disparate impact may be based on age when decision makers are given unchecked discretion to engage in subjective decision making and, as a result, act on the basis of conscious or unconscious age-based stereotypes. It included a non-exhaustive list of factors relevant to whether a factor is other than age.

Factors Other Than Age

Some commenters argued that the ''other than age'' paragraph conflated disparate treatment and disparate impact and improperly shifted the burden of proof by requiring the employer to prove that the challenged employment action was not based on age. They also argued that the paragraph conflicted with *Meacham's* statement that the RFOA defense assumes that a non-age factor is at work.

In response to comments, and to ensure that the rule is not misconstrued as placing a disparate-treatment burden of proof on employers, the Commission has revised the discussion into a subsection, which has been redesignated 1625.7(e)(1)–(3), addressing the term ''reasonable factors other than age.'' The Commission also has revised the lists into a single, non-exhaustive description of considerations relevant to the RFOA defense.

should be noted that the ADEA's affirmative defenses in section 4(f)(1) (BFOQ and foreign workplace) and section 4(f)(2) (seniority system and bona fide employee benefit plan) structurally and historically apply to intent-based claims. *See, e.g.,* 29 U.S.C. 623(f)(1), (2). *See Trans World Airlines, Inc.* v. *Thurston,* 469 U.S. 111, 121 (1985) (BFOQ and seniority system defenses raised to age-based denial of transfers); *Mahoney* v. *Radio Free Europe/Radio Liberty, Inc.,* 47 F.3d 447 (DC Cir. 1995) (holding that foreign workplace defense applied to age-based mandatory retirement provision).

[10] *Meacham,* 554 U.S. at 93.

[11] *Id.* at 95.

[12] *See Smith* v. *City of Jackson,* 544 U.S. 228 (2005).

[13] 554 U.S. 84, 97 (2008).

[14] 544 U.S. at 238–39. Although the majority opinion specifically rejected Justice O'Connor's view of the RFOA as a ''safe harbor analogous to the legitimate nondiscriminatory reason (LNR) justification,'' it did not respond to her contention that the ''RFOA provision also plays a distinct (and clearly nonredundant) role in 'mixed-motive' cases.'' 544 U.S. at 253. Thus, the majority's phrasing that the RFOA provision ''plays its principal role'' in disparate-impact cases seems to refer to the notion that it might have a role in mixed-motives cases. Any such role has been obviated, however, by the Court's subsequent holding that the ADEA does not permit ''mixed-motives'' claims. *Gross* v. *FBL Financial Servs. Inc.,* 557 U.S. 167 (2009).

[15] 544 U.S. at 238.

[16] The determination of whether an employer establishes a ''reasonable factors other than age'' defense is a jury question. *See EEOC* v. *Allstate Ins. Co.,* 458 F. Supp.2d 980, *aff'd,* 528 F.3d 1042 (8th Cir.), *reh'g en banc granted and opinion vacated on other grounds* (Sept. 8, 2008).

The final rule states that a reasonable factor other than age is a non-age factor that is objectively reasonable when viewed from the position of a prudent employer mindful of its responsibilities under the ADEA under like circumstances. The reference to ''non-age factor'' recognizes that ''other than age'' is an express part of the statutory RFOA defense.[17]

Prudent Employer

The preamble to the proposed rule stated that, in light of *Smith* and *Meacham,* a prudent employer would know that the ADEA was designed in part to avoid the application of neutral standards that disproportionately affect older workers. One commenter, noting that more than thirty years had passed between the enactment of the ADEA and the Supreme Court's determination that the law covered disparate-impact claims, questioned the Commission's statement. Another commenter agreed with the Commission and pointed out that the Court had decided *Smith* nearly five years, and *Meacham* nearly two years, before publication of the NPRM.

The Supreme Court's decisions in *Smith* and *Meacham* confirmed EEOC's longstanding position [18] that disparate-impact claims are cognizable under the ADEA and that employers have the burden of establishing the RFOA defense. The decisions also validated the 1965 Wirtz Report's concern about ''institutional arrangements'' that unintentionally limit the opportunities of older workers.[19] Courts had applied disparate-impact analysis to ADEA claims for many years,[20] and it was only after the Court's 1993 *Hazen Paper* decision [21] that some courts held that disparate-impact claims were not cognizable under the ADEA.[22] Therefore, the Commission continues to believe that a prudent employer mindful of its ADEA responsibilities should know that the law prohibits the use of neutral practices that disproportionately affect older workers and are not based on reasonable factors other than age. A reasonable factor other than age is one that an employer exercising reasonable care would use to avoid limiting the opportunities of older workers, in light of all the surrounding facts and circumstances.[23]

Reference to Tort Law

The proposed rule relied on tort principles when discussing what constitutes a ''reasonable'' factor other than age. Some commenters thought that the reference to tort law was practical and sensible. Others, however, objected to the use of tort law. They argued that employment discrimination law provides sufficient guidance for determining whether a practice is based on reasonable, nondiscriminatory factors and that the rule inappropriately imports the concept of ''reasonable employer'' into the RFOA analysis. One commenter asserted that, whereas tort law and sexual-harassment theory assess reasonableness in terms of an individual's efforts to avoid harm, the RFOA analysis assumes and permits disparate impact. Another commenter asserted that it is unfair to rely on some tort principles without including the concepts of contributory negligence and assumption of the risk.

The final rule continues to refer to tort principles. Employment discrimination law includes little discussion of reasonableness whereas tort law extensively analyzes the concept. Indeed, the Supreme Court recently made clear that federal nondiscrimination laws are torts and that ''when Congress creates a federal tort [we presume that] it adopts the background of general tort law.'' [24] Prior to *Staub,* the Supreme Court noted in *Faragher* v. *City of Boca Raton* [25] that lower courts have unanimously applied tort negligence standards to determine employer liability for co-worker harassment. Similarly, the Court turned to tort principles to determine what mental state warrants punitive damages.[26] Lower courts also have turned to tort law for guidance in resolving employment discrimination cases.[27]

The fundamental objective of employment discrimination statutes, ''like that of any statute meant to influence primary conduct, is * * * to avoid harm.'' [28] Tort law, too, focuses on the duty to avoid harm and provides guiding principles to help understand reasonableness in this context. Under the ADEA, employers are required to avoid the harm of using facially neutral practices that impair employment opportunities for older workers and are not reasonable.[29] Whether a factor is reasonable can be determined only in light of all of the surrounding facts and circumstances, including the employer's duty to be cognizant of the consequences of its choices.

The assertion that the rule should not refer to tort law without importing the concepts of contributory negligence and assumption of the risk into the RFOA analysis misapprehends the rule's reference to tort law. The rule does not import tort principles wholesale; rather, it merely refers to tort law for guidance. Like the defense to harassment, the RFOA defense considers what the employer knew about the harm and what it did to correct it. Negligence principles as applied to co-worker harassment do not address the concepts of contributory negligence and assumption of the risk, and there is no

[17] 29 U.S.C. 623(f)(1); *see also Smith,* 544 U.S. at 239 (noting that the RFOA defense ''preclud[es] liability if the adverse impact was attributable to a nonage factor that was 'reasonable' ''). When an employer asserts purportedly neutral criteria, the RFOA defense is not available if age is a component of the employer's practice or policy. *See, e.g., City of Los Angeles, Dept. of Water & Manpower* v. *Manhart,* 435 U.S. 702 (1978) (rejecting employer's assertion of neutral criterion of ''longevity'' where sex determined longevity).

[18] *See* 29 CFR 1625.7.

[19] Report of the Sec'y of Labor, The Older American Worker: Age Discrimination in Employment 15–17 (1965), *reprinted in* U.S. EEOC, Leg. History of the ADEA 32–34 (1981) (discussing ''[a] broad range of personnel programs and practices [that] affect the employment of the older worker, although they were not developed for this purpose'') (hereinafter ''Wirtz Report'').

[20] *See, e.g., Maresco v. Evans Chemetics,* 964 F.2d 106, 115 (2d Cir. 1992); *Abbott* v. *Fed. Forge, Inc.,* 912 F.2d 867, 872–77 (6th Cir. 1990); *Leftwich* v. *Harris-Stowe State Coll.,* 702 F.2d 686 (8th Cir.1983); *Geller* v. *Markham,* 635 F.2d 1027 (2d Cir.1980).

[21] 507 U.S. 604 (1993).

[22] *See, e.g., Mullin* v. *Raytheon Co.,* 164 F.3d 696 (1st Cir. 1999); *Ellis v. United Airlines, Inc.,* 73 F.3d 999, 1006–10 (10th Cir. 1996); *EEOC* v. *Francis W. Parker Sch.,* 41 F.3d 1073, 1077–78 (7th Cir. 1994). *But see Frank* v. *United Airlines, Inc.,* 216 F.3d 845, 856 (9th Cir. 2000) (disparate-impact claims cognizable under ADEA); *Criley* v. *Delta Air Lines Inc.,* 119 F.3d 102, 105 (2d Cir. 1997) (same); *Smith* v. *City of Des Moines,* 99 F.3d 1466, 1470 (8th Cir. 1996) (same).

[23] *See Smith,* 544 U.S. at 235 n.5 (quoting Wirtz Report's discussion of employment standards that unfairly disadvantage older workers); *cf. Faragher* v. *City of Boca Raton,* 524 U.S. 775, 808–09 (1998) (rejecting employer's argument that it should not be held liable for negligently failing to promulgate anti-harassment policy where EEOC regulations advised employers to take all steps necessary to prevent harassment and holding as a matter of law that employer did not exercise reasonable care to prevent sexual harassment).

[24] *Staub* v. *Proctor Hosp.,* 131 S. Ct. 1186, 1191 (2011) (citing, among other decisions, *Burlington Indus., Inc.* v. *Ellerth,* 524 U.S. 742, 764 (1998)).

[25] 524 U.S. 775, 799 (1998). In *Faragher* and *Ellerth,* the Court crafted a duty-of-care defense in hostile-environment cases without any statutory language directing it to do so.

[26] *Kolstad* v. *Am. Dental Ass'n,* 527 U.S. 526, 538 (1999).

[27] *E.g., Baskerville* v. *Culligan Int'l Co.,* 50 F.3d 428, 432 (7th Cir. 1995) (reasonableness of employer's steps to discover and correct sexual harassment ''depends on the gravity of the harassment''); *see also Erickson* v. *Wis. Dep't of Corr.,* 469 F.3d 600, 604 (7th Cir. 2006) (''The greater the potential injury to the employee, the greater care the employer must take.'') (citing *Baskerville*); *Shager* v. *Upjohn Co.,* 913 F.2d 398, 405 (7th Cir. 1990) (noting, in an age case, that discrimination constitutes a tort).

[28] *Faragher,* 524 U.S. at 806 (citing *Albemarle Paper Co.* v. *Moody,* 422 U.S. 405, 417 (1975)).

[29] *See Meacham* v. *Knolls Atomic Power Lab.,* 554 U.S. 84, 101 (2008); *Smith* v. *City of Jackson,* 544 U.S. 228, 234–5 & n.5 (2005).

need to address those concepts in the RFOA context. Moreover, employees do not ''contribute'' (negligently or otherwise) to an employer's use of an employment practice that has an age-based disparate impact. In addition, it would be contrary to the purposes of the anti-discrimination laws to assert that any employee voluntarily assumes the risk of being subject to discrimination.[30]

Design and Administration of Employment Practice

The proposed rule looked at ''reasonable'' from the position of a prudent employer and considered how the challenged employment practice is designed and administered. Some commenters agreed that the rule should look at how the practice is applied as well as at how it is designed. Other commenters, however, argued that this approach inappropriately focuses on the employer's decision-making process rather than on the factor upon which the decision was based. In their view, the RFOA inquiry should focus on the factor underlying the employment practice, not on whether the employer acted reasonably in selecting the factor.

The final rule continues to focus on how the employment practice is designed and administered. The RFOA defense arises after an employment practice has been shown to have an age-based disparate impact. In that context, the concept of ''reasonable factor'' necessarily includes consideration of the reasonableness of the factor's application. Thus, the *Smith* Court considered not just the City of Jackson's goal of retaining police officers, but also the design and administration of the pay plan used to achieve that goal.[31]

The way in which an employer applies the factor is probative of whether it is reasonable; a practice that seems reasonable in the abstract might not be reasonable in its application. For example, an employer might require candidates for jobs in its meat-processing plant to pass a physical strength test. It would be reasonable for the employer to design a test that accurately measures the ability to perform the job successfully. It would be manifestly unreasonable, however, for the employer to administer the test inconsistently, evaluate results unevenly, or judge test takers unreliably. Similarly, although it might well be reasonable for an employer to conduct a reduction-in-force (RIF) to save money, if an identified employment practice caused older workers to be disparately impacted, the cost-cutting goal alone would not be sufficient to establish the RFOA defense. The employer would have to show that the practice was both reasonably designed to further or achieve a legitimate business purpose and administered in a way that reasonably achieves that purpose in light of the particular facts and circumstances that were known, or should have been known, to the employer.

''Reasonable'' and ''Rational Basis''

The preamble to the proposed rule noted that the RFOA defense requires that a practice be reasonable, which is different from requiring only that it be rational. Some commenters argued that the RFOA standard should be a rational-basis standard and that ''reasonable'' means not irrational or not arbitrary. Other commenters commended the EEOC for clarifying that the reasonableness test is not a rational-basis test.

The Commission continues to believe that the RFOA defense is more stringent than a rational-basis or non-arbitrary standard for several reasons. First, the Supreme Court has held that the RFOA provision ''confirms that Congress, through the ADEA, has effectively elevated the standard for analyzing age discrimination to heightened scrutiny.'' [32] In other words, the Supreme Court has previously recognized that the RFOA reflects a standard of proof higher than a rational-basis standard.

Second, proof that an action was rational or non-arbitrary focuses on whether an articulated reason is a pretext for *intentional* discrimination.[33] Thus, equating the RFOA defense with a rational-basis standard would improperly conflate ADEA disparate-treatment and disparate-impact standards of proof. If an employer attempting to establish the RFOA defense were only required to show that it had acted rationally, then the employer would merely be required to show that it had not engaged in intentional age discrimination. In *Smith,* the Supreme Court bluntly held that the RFOA provision is not a statutory safe harbor from liability for disparate treatment when the employer merely had a rational justification for its actions.[34]

Thus, the Supreme Court concluded that the ADEA prohibits more than intentional discrimination; it also prohibits employers from adopting facially neutral practices that disproportionately exclude older workers unless the employer can prove that its actions were based on reasonable factors other than age. In holding that the RFOA provision is the defense to disparate-impact claims, the Supreme Court recognized that the RFOA defense is distinguishable in form and substance from the ''legitimate, nondiscriminatory reason'' evidence that the employer must produce in individual disparate-treatment cases.[35] The RFOA defense necessarily requires more than merely a showing that the employer's action was not irrational or not arbitrary.[36] To adopt commenters' assertions would be to nullify the *Smith* and *Meacham* holdings and undermine the intent of Congress to address ''the

[30] *McKennon* v. *Nashville Banner Pub. Co.,* 513 U.S. 352 (1995) (the ADEA is part of a wider statutory scheme to protect employees in the workplace nationwide). Allowing an assumption-of-risk defense would defeat the ADEA's deterrent purpose; it would allow employers to avoid liability simply by advertising the fact that they will discriminate. *See Smith* v. *Sheahan,* 189 F.3d 529, 534 (7th Cir. 1999) (dismissing the idea that discriminatory actions can be excused by a prevailing workplace culture that has included exclusionary practices and bigotry and stating, ''There is no assumption-of-risk defense to charges of workplace discrimination.''); *Jenson* v. *Eveleth Taconite Co.,* 130 F.3d 1287, 1292 (8th Cir. 1997) (holding that an employer's liability for sex discrimination is not mitigated by the fact that the work environment was known to have an egregiously discriminatory culture); *Williams* v. *Gen. Motors Corp.,* 187 F.3d 553, 564 (6th Cir. 1999) (''women working in the [male-dominated] trades do not deserve less protection from the law than women working in a courthouse'').''

[31] *See Smith,* 544 U.S. at 242. (''Reliance on seniority and rank is unquestionably reasonable given the City's goal of raising employees' salaries to match those in surrounding communities. * * * [T]he City's decision to grant a larger raise to lower echelon employees for the purpose of bringing salaries in line with that of surrounding police forces was a decision based on a 'reasonable facto[r] other than age' that responded to the City's legitimate goal of retaining police officers.'').

[32] *Kimel* v. *Florida Bd. of Regents,* 528 U.S. 62, 88 (2000). The *Kimel* Court held that the ADEA did not validly abrogate states' Eleventh Amendment immunity from suit by private individuals because it ''prohibits substantially more * * * than would likely be held unconstitutional under the * * * rational basis standard.'' *Id.* at 86. The Court concluded that ''[the RFOA] exception confirms, * * * rather than disproves, the conclusion that the ADEA's protection extends beyond the requirements of the Equal Protection Clause.'' *Id.* at 88.

[33] *Smith,* 544 U.S. at 253.

[34] *Id.* at 238–39 (rejecting Justice O'Connor's argument that ''the RFOA provision's reference to 'reasonable' factors serves only to prevent the employer from gaining the benefit of the statutory safe harbor by offering an irrational justification.'' *Id.* at 253).

[35] *Id.* at 238–39 (rejecting Justice O'Connor's contention that RFOA is safe harbor from liability, because employer can defeat liability in disparate-treatment case by showing that employee was rejected for legitimate, nondiscriminatory reason) (citing *Texas Dep't of Cmty. Affairs* v. *Burdine,* 450 U.S. 248, 254 (1981)); *see also Meacham,* 554 U.S. at 96, n.12.

[36] *Smith,* 544 U.S. at 238–39.

consequences of employment practices, not simply the motivation.'' [37]

Third, a rational basis standard would also undercut the Court's recognition of the RFOA as an affirmative defense. Under a rational-basis standard, an action ''may be based on rational speculation unsupported by evidence or empirical data.'' [38] The decision maker is not required ''to articulate at any time the purpose or rationale supporting its classification,'' [39] and an action will be upheld ''if there is any reasonably conceivable state of facts that could provide a rational basis for the classification.'' [40] By that measure, the ''reasonable'' requirement would afford no protection against practices that have an age-based disparate impact.[41]

Finally, equating the RFOA reasonableness requirement with a rational-basis standard would contradict the *Smith* Court's holding that the ''reasonable'' requirement shows that the RFOA provision is more stringent than the Equal Pay Act's (''EPA'') ''any other factor'' defense.[42] Indeed, applying the rational-basis test to the RFOA defense would actually make it less stringent than the EPA's ''any other factor'' defense as the latter has been construed by the EEOC and some courts, which have taken the position that, even under the Equal Pay Act, an employer asserting an ''any other factor other than sex'' defense must show that the factor is related to job requirements or otherwise is beneficial to the employer's business.[43]

''Reasonable'' and ''Business Necessity''

The February 2010 Notice of Proposed Rulemaking emphasized that the proposed RFOA standard was lower than the business-necessity test of Title VII of the Civil Rights Act of 1964,[44] but higher than the Equal Pay Act's ''any other factor'' test.[45] It also stated that the factors relevant to the reasonableness inquiry recognize that the RFOA standard is less stringent than the business-necessity standard and that disparate-impact liability is narrower under the ADEA than under Title VII.

Several commenters expressed the view that the proposed rule impermissibly imposed Title VII's business-necessity test on ADEA defendants. One of the commenters suggested that EEOC revise the language to state that the factors ''may'' be relevant to the RFOA determination. The commenters' arguments generally centered on the mistaken view that the factors were requirements, and that the factors concerning employers' efforts to assess impact, minimize harm, and weigh options amounted to a business-necessity requirement.

In response, the Commission has made several changes. To address the commenters' view that the factors were required elements or duties, the rule now refers to ''considerations'' relevant to demonstrating the defense. The rule sets forth a non-exhaustive description of relevant considerations, rather than a list of duties to be met. Because the RFOA determination involves a fact-intensive inquiry, the importance of a consideration depends on the facts of the particular situation. Based on the specific facts raised, one or two considerations may be sufficient to establish the RFOA defense.

In addition, the rule expressly states that no specific consideration or combination of considerations need be present for a differentiation to be based on reasonable factors other than age and that the presence of one consideration does not automatically establish the defense. Just as the absence of a consideration does not automatically defeat the RFOA defense, so too the presence of one consideration does not necessarily prove that a differentiation is based on reasonable factors other than age. Rather, as the rule makes clear, the RFOA determination depends on all of the facts and circumstances in each particular situation.

The Commission disagrees that consideration of efforts to assess impact, reduce harm, and weigh options suggests a Title VII business-necessity analysis. However, the Commission has deleted the factor concerning the availability of options because some commenters misconstrued the factor as imposing the Title VII standard that the employer must search for and select the least discriminatory alternative.[46] Removal of the factor does not mean that the availability of measures to reduce harm is irrelevant to

[37] *Id.* at 234–35 and n.5 (''just as *Griggs* recognized that the high school diploma requirement, which was unrelated to job performance, had an unfair impact on African-Americans * * * the Wirtz Report identified the identical obstacle to the employment of older workers'').

[38] *FCC* v. *Beach Commc'ns, Inc.,* 508 U.S. 307, 315 (1993) (Cable Communications Policy Act's distinction between cable television facilities that serve separately owned buildings and those that serve buildings under common ownership, 47 U.S.C. 522(7)(B), is rationally related to a legitimate government purpose under the Fifth Amendment's Due Process Clause).

[39] *Nordlinger* v. *Hahn,* 505 U.S. 1, 15 (1992) (taxation system focusing on acquisition value of real property rationally furthers legitimate state interests for purposes of the Equal Protection Clause of the Fourteenth Amendment).

[40] *FCC* v. *Beach Commc'ns, Inc.,* 508 U.S. at 313.

[41] *See id.* at 323 n.3 (''Judicial review under the 'conceivable set of facts' test is tantamount to no review at all.'') (Stevens, J., concurring); *see also W. Air Lines, Inc.* v. *Criswell,* 472 U.S. 400, 422 n. 36 (1985) (rejecting rational-basis standard for ''bona fide occupational qualification'' defense where, ''under a 'rational basis' standard a jury might well consider that its 'inquiry is at an end' with an expert witness' articulation of any 'plausible reaso[n]' for the employer's decision'') (quoting *United States R.R. Ret. Bd.* v. *Fritz,* 449 U.S. 166, 179 (1980)).

[42] *See Smith,* 544 U.S. at 239 n.11 (2005) (finding it '' instructive'' that, in contrast to providing an ''any other factor'' defense under the Equal Pay Act, 29 U.S.C. 206(d)(1), ''Congress provided that employers could use only *reasonable* factors in defending a suit under the ADEA'') (emphasis in the original).

[43] EEOC Compliance Manual, Compensation Discrimination 10–IV.F.2 (2000) (''An employer asserting a 'factor other than sex' defense also must show that the factor is related to job requirements or otherwise is beneficial to the employer's business.''); *see also Aldrich* v. *Randolf Cent. Sch. Dist.,* 963 F.2d 520, 525–26 (2d Cir. 1992) (factor other than sex must be grounded in legitimate business-related concerns); *EEOC* v. *J.C. Penny Co.,* 843 F.2d 249, 253 (6th Cir. 1988) (factor-other-than-sex defense requires a legitimate business reason); *Glenn* v. *Gen. Motors Corp.,* 841 F.2d 1567, 1571 (11th Cir. 1988) (defense ''applies when the disparity results from unique characteristics of the same job; from an individual's experience, training, or ability; or from special exigent circumstances connected with the business''); *Kouba* v. *Allstate Ins. Co.,* 691 F.2d 873, 876–77 (9th Cir. 1982) (employer must have an acceptable business reason and ''must use the factor reasonably in light of the employer's stated purpose as well as its other practices''). *But see Behm* v. *United States,* 68 Fed. Cl. 395, 400–01 (Fed. Cir. 2005) (text of EPA does not suggest that factor other than sex must be business related; applying ''deferential'' rational-basis standard to any-other-factor defense of federal government employer ''whose business is not business, but government''); *Taylor* v. *White,* 321 F.3d 710, 720 (8th Cir. 2003) (any-other-factor defense does not involve a reasonableness inquiry); *Fallon* v. *State of Ill.,* 882 F.2d 1206, 1211 (7th Cir. 1989) (business-related reason need not be shown).

[44] 42 U.S.C. 2000e–2(k)(1)(A)(i) (a particular employment practice that has a disparate impact based on race, color, religion, sex, or national origin is unlawful unless the employer ''demonstrate[s] that the challenged practice is job related for the position in question and consistent with business necessity'').

[45] 29 U.S.C. 206(d)(1)(iv) (permitting sex discrimination in wages pursuant to a ''differential based on any factor other than sex.'')

[46] Three commenters disagreed with the Commission's statement, in the preamble to the proposed rule, that Title VII requires an employer to adopt the least discriminatory alternative. Under Title VII, once the employer establishes that the challenged practice is job related and consistent with business necessity, the burden shifts to the plaintiff to demonstrate that there is an alternative employment practice that the employer refuses to adopt. 42 U.S.C. 2000e–2(k)(1)(A)(ii), 2000e–2(k)(1)(C) (adopting pre-*Wards Cove* approach to ''alternative employment practice''). The alternative must be less discriminatory and must serve the employer's legitimate business needs. *See Albemarle Paper Co.* v. *Moody,* 422 U.S. 405, 425 (1975); *Dothard* v. *Rawlinson,* 433 U.S. 321, 329 (1977); *see also Ricci* v. *DeStefano,* 129 S. Ct. 2658, 2673 (2009). As a practical matter, an employer that does not adopt the least discriminatory effective alternative proposed by the plaintiff will not prevail in a Title VII disparate-impact case because the plaintiff will be able to establish the existence of a less discriminatory alternative. That is not the case under the ADEA, whose RFOA standard is less stringent than Title VII's business-necessity standard. *Smith,* 544 U.S. at 243.

reasonableness. There may be circumstances in which the availability of a measure that would noticeably reduce harm was or should have been so readily apparent that it would be manifestly unreasonable for the employer to fail to use it. The removal of the factor does, however, make clear that an employer need not search for alternatives and use the one that is least discriminatory. These changes, along with the clarification that none of the considerations is a required element of the RFOA defense, make clear the distinction between the ADEA RFOA standard and Title VII's business-necessity standard.

Under Title VII, if a particular employment practice has a disparate impact based on race, color, religion, sex, or national origin, then the employer must ''demonstrate that the challenged practice is job related for the position in question and consistent with business necessity.'' [47] An employer could meet the Title VII standard by proving, for example, that a test has been validated to show that it is ''predictive of * * * important elements of work behavior which comprise * * * the job.'' [48] In contrast, the RFOA defense involves the less demanding standard of reasonableness.

Application of the rule's considerations to a physical fitness test [49] illustrates the difference between the RFOA and business-necessity standards. For example, suppose a security company mandated that all applicants for security guard positions must be able to run a half mile in three minutes and do 35 push ups in a row. The company's stated purpose is to ensure that guards are physically able to pursue and apprehend suspects (consideration (i)). The test defines and measures the factors of speed and strength and provides clear guidance on how the test is to be applied accurately and fairly (consideration (ii)). The employer performs a disparate-impact analysis and finds that large percentages of older workers and women cannot pass the test. (consideration (iv)). The employer changes the test so that performance standards vary based on age and gender, when it learns that a successful competitor firm uses such standards and is attracting a large pool of qualified candidates. Although the test continues to disproportionately exclude older and female applicants, it excludes fewer of them and still produces qualified hires (consideration (v)).

The security company would not need to perform a validation study to establish the RFOA defense. In contrast, to establish a Title VII business-necessity defense, the employer would need to validate the test to show that it accurately measured safe and efficient performance. In addition, even if the employer could show that the test was validated, proof by female applicants that there were less discriminatory alternatives that the employer refused to adopt would impose liability under Title VII. This is just one example of how the RFOA standard is less stringent than Title VII's business-necessity standard.

Relevant Considerations

The proposed rule set forth non-exhaustive lists of factors relevant to whether an employment practice is reasonable and is based on factors other than age. Although, as discussed above, some commenters objected to some of the factors, other commenters found the lists useful and generally supported them. One commenter suggested that EEOC provide guidance on the types of evidence relevant to the factors and argued that the evidence should be objective, in existence before litigation, and more than mere self-serving statements. Another commenter stated that no single factor should be dispositive of whether an employment practice is reasonable.

Given the context-specific nature of the RFOA inquiry, it is not possible to specify every type of relevant evidence. All relevant evidence should be considered, and such evidence necessarily will vary according to the facts of each particular situation. Depending on the circumstances, relevant evidence might include documents describing the business purpose underlying the challenged practice, copies of any written guidance that the employer provided to decision makers, explanations of how the employer implemented the practice, and impact-related studies that the employer may have conducted. Objective evidence that was in existence prior to litigation will carry more weight than mere self-serving statements or after-the-fact rationales.

The first ''reasonable'' factor listed in the proposed rule concerned whether the employment practice and its implementation were common business practices. One commenter supported this factor because, as a factor rather than a required element, it would allow employers to defend their actions while ensuring that discriminatory practices that may be common in an industry are not given weight. Other commenters opposed the factor. Some commenters argued, for example, that the factor could stifle employer creativity and was not relevant to whether a particular employer's practice was reasonable under particular circumstances. Others argued that the commonality of a practice has no bearing on whether it is discriminatory and expressed concern that the factor could allow an employer to defend a practice when there is industry-wide discrimination. One commenter suggested that the factor should refer to common practices in comparable settings rather than to common business practices.

In light of the variety of concerns about this factor, the Commission has deleted it from the relevant considerations.

Section 1625.7(e)(2)(i)

The second item in the proposed rule's list of factors relevant to ''reasonableness'' concerned the extent to which the factor is related to the employer's stated business goal. One commenter thought that the factor encompassed the essence of the RFOA defense but suggested that the term ''stated'' be deleted. Another commenter thought that the term ''stated'' was vague and wondered whether it meant that an employer must state its goal in advance.

The Commission has revised the provision, which has been redesignated 1625.7(e)(2)(i), to refer to an employer's ''stated business purpose,'' which is the legitimate business purpose that the employer had at the time of the challenged employment practice. This approach is consistent with *Smith,* which expressly noted that the City's ''stated purpose * * * was to 'attract and retain qualified people, provide incentive for performance, maintain competitiveness with other public sector agencies and ensure equitable compensation to all employees

[47] 42 U.S.C. 2000e–2(k)(1)(A)(i).

[48] *Albemarle Paper Co.* v. *Moody,* 422 U.S. 405, 431, 434 (1975). The business-necessity standard has been articulated in other ways. *See, e.g., Dothard* v. *Rawlinson,* 433 U.S. 321, 331 n.14 (1977) (''necessary to safe and efficient job performance''); *Griggs* v. *Duke Power Co.,* 401 U.S. 424, 432 (1971) (employment practice must bear a ''manifest relationship to the employment in question''); *El* v. *Se. Pa. Trans. Auth.,* 479 F.3d 232, 242, 245 (3d Cir. 2007) (practice at issue must ''accurately—but not perfectly—ascertain[] an applicant's ability to perform successfully the job in question'').

[49] It is important to emphasize that physical-fitness requirements must be relevant to successful performance of the particular job, so as to avoid the use of such tests to restrict the hiring of older workers when there is no basis for such requirements, as the 1965 Wirtz Report documented. *See* Wirtz Report at 4. Subjecting only older workers to a particular test would be facially discriminatory and the RFOA defense would not apply. *See, e.g., EEOC* v. *Massachusetts,* 987 F.2d 64, 73 (1st Cir. 1993) (rejecting RFOA defense to practice requiring employees to pass physical fitness exam at age 70).

regardless of age, sex, race and/or disability.' '' [50] The City reasonably achieved this purpose by raising the salaries of junior officers to make them competitive with those of comparable positions in the region.[51] Similarly, an employer whose stated purpose is to hire qualified candidates could reasonably achieve this purpose by ensuring that its hiring criteria accurately reflect job requirements.

Section 1625.7(e)(2)(ii)

The proposed rule said that the extent to which the employer took steps to define and apply the factor accurately and provided training, guidance, and instruction to managers was relevant to reasonableness. Three commenters supported this factor. One of them noted that training and guidance are sound business practices that are not burdensome. Two commenters objected to this factor. One argued that this factor is not necessary because it is subsumed under the factor concerning the employment practice's relation to the employer's stated business goals. The other commenter argued that, although providing guidance and training to managers may be good business practice and may enhance an employer's RFOA defense, the ADEA does not require employers to take such steps.

The proposed rule also included consideration of the extent to which supervisors were given guidance or training in the ''other than age'' section. Two commenters supported this factor as written, one commenter asked for guidance on the type of training that will help supervisors to make decisions based on objective rather than subjective criteria, and one commenter argued that an employer should lose its affirmative defense if the employer does not train its managers on subjective decision making. One commenter opposed this factor and suggested that EEOC work with stakeholders to determine whether an employer's preventive training measures should be a *Faragher*-type defense [52] to ADEA disparate-treatment claims. Another commenter asked how often training should be conducted and suggested that training should be required for all protected bases if it is required for age discrimination.

As discussed, the Commission has eliminated the ''other than age'' section and has combined the factors relating to guidance and instruction of managers into a single consideration, which has been designated 1625.7(e)(2)(ii). The Commission has deleted the reference to ''took steps'' to make clear that the consideration focuses on how the employer actually defined and applied its criteria. Through this consideration, the final rule recognizes the importance of defining an employment criterion carefully and educating managers and supervisors on how to apply it fairly.

As commenters noted, it is in the employer's interest to define and apply accurately the criteria on which it relies. Ensuring that decision makers understand and know how to apply the employer's standard will help to ensure that the employer has the work force it wants. For example, research demonstrates that older workers are commonly perceived to be less productive than younger workers but that such stereotypes are inaccurate.[53] In fact, studies show a nonexistent or slightly positive relationship between job performance and older age.[54] The output of older workers is equal to that of younger workers; [55] older workers are better in terms of accuracy and steadiness of work output and output level; [56] and they outperform younger workers in the area of sales.[57] Thus, educating decision makers to be aware of, and avoid, age-based stereotypes can help to ensure that they apply the employer's standard accurately and do not unfairly limit the opportunities of older workers.

For example, an employer seeking to hire individuals with technological skills could instruct decision makers on the particular skills (e.g., experience using specific software or developing certain types of programs) that it needs. Similarly, rather than simply asking managers to assess an employee's training potential, an employer could instruct managers to identify the times the employee has received or sought training. Using objective criteria as much as possible and providing decision makers with specific job-related information can help to overcome age-based stereotypes.[58]

The rule does not require employers to train their managers. First, by referring not just to training but to ''guidance or training,'' it recognizes that employers use a wide range of measures to convey their expectations to managers, depending on the circumstances. For example, a small employer might reasonably rely entirely on brief, informal, verbal instruction. Second, as with all of the considerations in section 1625.7(e), this consideration is a not a required duty. Instead, its importance depends on the particular facts raised. Thus, an employer's RFOA defense will not necessarily fail because, for example, the employer did not train managers on how to apply its standard. On the other hand, steps such as carefully defining a standard and instructing managers on how to apply it are evidence that the employer's actions were based on reasonable factors other than age and will support the employer's defense.

The Commission does not agree with the commenter's suggestion that preventive training measures should be a *Faragher*-type defense. Employers have a *Faragher*-type defense to harassment based on age.[59] An employer's training measures do not constitute a defense to disparate treatment or disparate impact, but they should go a long way toward preventing conscious or unconscious bias from infecting decision making in the first

[50] *Smith,* 544 U.S. at 231.

[51] *Id.* at 242.

[52] *Faragher* v. *City of Boca Raton,* 524 U.S. 775 (1998) (employer not liable for supervisor harassment that did not result in tangible employment action if employer exercised reasonable care to prevent and promptly correct any harassment and employee unreasonably failed to complain to management or to avoid harm otherwise).

[53] Robert McCann & Howard Giles, *Ageism in the Workplace: A Communication Perspective,* in Ageism: Stereotyping and Prejudice Against Older Persons 163, 172 (Todd D. Nelson ed. 2002) (citing J.O. Britton & K.R. Thomas, *Age and Sex as Employment Variables: Views of Employment Service Interviewers,* 10 J. Emp. Counseling 180 (1973); S. Cole, *Age and Scientific Performance,* 84 a.m. J. Sociology 958 (1979); A. Roe, *Changes in Scientific Activities with Age,* 150 Sci. 313 (1965); P. E. Panek et al., *Age Differences in Perceptual Style, Selective Attention, and Perceptual-Motor Reaction Time,* 4 Experimental Aging Res. 377 (1978); N. Munk, *Finished at 40,* 139 Fortune 50 (1999)).

[54] *See generally* McCann & Giles, *supra* note 53, at 172 (citing J. A. Forteza & J. M Prieto, *Aging and Work Behavior,* in Handbook of Industrial and Organizational Psychology 447 (H. C. Triandis et al. eds., 2d ed. vol. 4, 1994); D. C. Park, *Aging, Cognition, and Work,* 7 Hum. Performance 181 (1994); P. Warr, *Age and Employment, in* Handbook of Industrial and Organizational Psychology, *supra,* at 485).

[55] McCann & Giles, *supra* note 53, at 173 (citing Commonwealth Fund, The Untapped Resource: Americans Over 55 at Work (1993)).

[56] McCann & Giles, *supra* note 53, at 173 (citing J. Eisenberg, *Relationship Between Age and Effects Upon Work: A Study of Older Workers in the Garment Industry,* Dissertation Abstracts Int'l 41 (4A) (1980)).

[57] McCann & Giles, *supra* note 53, at 173 (citing W. H. Holley et al., *Age and Reactions to Jobs: An Empirical study of Paraprofessional Workers,* 1 Aging & Work 33 (1978)).

[58] *See* Richard A. Posthuma & Michael A. Campion, *Age Stereotypes in the Workplace: Common Stereotypes, Moderators, and Future Research Directions,* 35 J. Mgmt. 158, 172 (2009) (availability and use of job-related information reduces the effects of age-based stereotypes).

[59] *See, e.g., Weyers* v. *Lear Operations Corp.,* 359 F.3d 1049, 1056 n.6 (8th Cir. 2004) (same analysis applies to hostile-environment claims under ADEA and Title VII); *Terry* v. *Ashcroft,* 336 F.3d 128, 148–50 (2d Cir. 2003) (same); EEOC Enforcement Guidance: Vicarious Employer Liability for Unlawful Harassment by Supervisors II (June 18, 1999) (*Faragher* vicarious-liability rule applies to unlawful harassment on all covered bases, including age).

place. Although training is not a required element of the RFOA defense, it is a key component of efforts to provide a workplace free from discrimination. The Commission urges employers to educate all employees on their rights and responsibilities under all anti-discrimination laws.

Section 1625.7(e)(2)(iii)

Paragraph 1625.7(b)(2) of the proposed rule noted that, in the typical disparate-impact case, an employer has used an objective, non-age factor and the inquiry focuses on reasonableness. Relying on *Watson* v. *Fort Worth Bank and Trust,*[60] however, it also said that employers are subject to liability under disparate-impact analysis for granting supervisors unchecked discretion to engage in subjective decision making because the unchecked discretion allows conscious or unconscious age-based stereotypes to infect the decision-making process and, as such, is not ''other than age.'' It listed three factors relevant to whether an employment practice was ''other than age'': the extent to which the employer gave supervisors unchecked discretion to assess employees subjectively, the extent to which supervisors evaluated employees based on factors known to be subject to age-based stereotypes, and the extent to which supervisors were given guidance or training.

Three commenters supported the proposed rule's approach to subjective decision making. They noted that subjective decision making frequently disadvantages older workers and raises the risk of age-based disparate impact. Other commenters who addressed this issue opposed the approach and argued that subjective decision making is not inherently based on age. They asserted that the proposed rule conflicted with *Meacham's* statement that the RFOA defense assumes that a non-age factor is at work, misconstrued *Watson,* and conflated disparate impact and disparate treatment. Some commenters asked for more guidance on the meaning of ''unchecked discretion.''

The preamble to the proposed rule noted that criteria such as flexibility, willingness to learn, and technological skills are particularly susceptible to age-based stereotyping. One commenter argued that it is appropriate for an employer to consider these qualities, which are relevant to today's workplace. Another commenter asserted that the factor was too broad and could encompass such criteria as '' 'energy,' 'flexibility,' 'adaptability,' 'long-term commitment to company,' 'success driven,' 'tolerance,' [and] 'creativity.' '' The commenter argued that the factor would cause parties to focus on whether a criterion was subject to stereotypes rather than on whether an employer evaluated employees negatively because of age.

The rule continues to recognize that giving supervisors unchecked discretion to engage in subjective decision making may result in disparate impact and that employers should take reasonable steps to ensure supervisors exercise their discretion in a manner that does not violate the ADEA. To prevent the misunderstanding reflected in the comments, however, the Commission has revised the rule. First, as noted above, the rule no longer addresses ''reasonable'' and ''other than age'' in separate paragraphs, but discusses ''reasonable factor other than age'' in a single paragraph. Second, the factors listed under ''other than age'' in the NPRM have been integrated into 1625.7(e)(2)(ii) and (e)(2)(iii). Section 1625.7(e)(2)(ii) addresses the extent to which the employer defined the employment criterion—such as a subjective factor—and provided supervisors with guidance on how to apply it. The Commission also has combined two ''other than age'' factors into a single consideration addressing subjective decision making and the use of criteria susceptible to age-based stereotypes. Section 1625.7(e)(2)(iii) makes clear that the extent to which the employer attempts to minimize subjectivity and avoid age-based stereotyping is relevant to whether or not it acted reasonably, particularly where the criteria are known to be subject to age-based stereotypes.

The Commission disagrees with commenters' assertions that the proposed rule was inconsistent with the Supreme Court's decisions in *Meacham* and *Watson* and believes that the rule is consistent with those decisions. First, *Meacham* did not say that a practice is ''without respect to age'' in every impact case, but only that such is the case in the typical disparate-impact case.[61] Second, although ''[i]t is true * * * that an employer's policy of leaving * * * decisions to the unchecked discretion of lower level supervisors should itself raise no inference of discriminatory conduct,''[62] this does not mean ''that the particular supervisors to whom this discretion is delegated always act without discriminatory intent.''[63] As the Supreme Court recognized in *Watson,* disparate-impact analysis may be the only way to combat ''the problem of subconscious stereotypes and prejudices'' that may affect subjective decision making.[64] Thus, although employers may sometimes deem it necessary to use subjective criteria to assess employees, it is not reasonable to leave the supervisors' discretion unconstrained.

Contrary to some commenters' assertions, the rule does not improperly conflate disparate-treatment and disparate-impact claims. It is not surprising, however, that disparate-treatment and disparate-impact claims may overlap in the context of subjective decision making. As the Supreme Court has noted, ''the necessary premise of the disparate impact approach is that some employment practices, adopted without a deliberately discriminatory motive, may in operation be functionally equivalent to intentional discrimination.''[65] As noted above, the final rule's reference to a ''non-age factor'' reflects the language of the statutory RFOA defense and the *Smith* decision.[66] It also reflects the *Watson* decision's endorsement of disparate-impact analysis to address the problem of stereotypes and prejudices that impede the elimination of employment discrimination.

The proposed rule used the term ''unchecked'' discretion, which was also used by the Court in *Watson.* Nevertheless, to address commenters' confusion about the term, we have eliminated it. The rule now refers to whether the employer ''limited supervisors' discretion.''

One commenter, noting that the identification of a specific employment practice is part of a plaintiff's prima facie case, argued that the issue of subjective decision making is not relevant to the RFOA defense. As noted above, the final rule expressly states that the individual challenging the practice is responsible for isolating and identifying the specific employment practice causing the adverse impact. As courts have recognized, however, plaintiffs may challenge an overall decision-making process ''if the employer utilizes an 'undisciplined system of subjective decision making.' ''[67] If an individual establishes

[60] 487 U.S. 977 (1988).

[61] 554 U.S. at 96.

[62] *Watson,* 487 U.S. at 990.

[63] *Id.*

[64] *Id.*

[65] *Id.* at 987; *see also id.* at 998 (factors such as cost of alternative relevant to ''whether the challenged practice has operated as the functional equivalent of a pretext for discriminatory treatment''); *accord Wards Cove Packing Co.* v. *Atonio,* 490 U.S. 642, 660 (1989); *Albemarle Paper Co.,* 422 U.S. at 425.

[66] *See* 29 U.S.C. 623(f)(1); *Smith,* 544 U.S. at 239.

[67] *Durante* v. *Qualcomm, Inc.,* 144 Fed. Appx. 603, 606 (9th Cir. 2005) (unpublished) (quoting

that an employer's use of subjective decision making had an age-based disparate impact, then the burden shifts to the employer to prove that the practice is a reasonable factor other than age. The extent to which the employer limited supervisors' discretion in a manner that minimized the likelihood that age-based stereotypes would infect the process is one of a number of factors relevant to whether the employer's practice is a reasonable, non-age factor.

Sections 1625.7(e)(2)(iv) and (v)

The proposed rule listed three factors that some commenters interpreted as imposing Title VII's business-necessity test on ADEA disparate-impact claims. One factor addressed the extent to which an employer assessed the impact of its practice on older workers, and another factor concerned the severity of harm to individuals in the protected age group and the extent to which the employer took steps to minimize the harm. The remaining factor looked at whether other options were available and the reasons the employer chose the option it did. Quoting the *Smith* statement that the RFOA inquiry does not require employers to adopt a less discriminatory alternative,[68] a footnote explained that the factor did not mean that an employer must adopt a practice that has the least severe age-based impact. The footnote also quoted a Restatement of Torts (Second) comment concerning unreasonable risk.

Some commenters argued that the factors conflate the concepts of impact and reasonableness, which are analytically distinct. They asserted that the factors improperly impose an affirmative duty to monitor selection procedures for adverse impact, that employers will not have data to conduct mandated impact analyses because they do not collect and report statistics on the ages of employees and applicants, that conducting impact analyses would be too costly for small employers, and that the factors penalize employers that do not conduct analyses. In addition, noting that plaintiffs have the burden of establishing that an employment practice has a disparate impact, some commenters argued that the factors inappropriately place the burden of disproving impact on employers. They also argued that the factor concerning consideration of other options conflicts with the *Smith* statement. Some commenters noted that, under Title VII, plaintiffs, not employers, have the burden of identifying less discriminatory alternatives. One commenter who opposed the factor argued that, if the Commission retains the factor, it should refer to ''other known options'' because employers should not be expected to know all potential employment practices. The commenter also argued that the *Smith* and Restatement quotes in the footnote were contradictory. Another commenter expressed concern that an alternative designed to minimize a practice's age-based impact might have an adverse impact on another protected group.

Two commenters supported the factor concerning consideration of other options. They noted that, as the Supreme Court stated in *Watson,* evidence that the employer ignored equally effective less discriminatory alternatives suggests that the challenged practice was the ''functional equivalent of a pretext for discriminatory treatment.''[69]

In response to comments, and to emphasize that the rule reflects a standard that is less stringent than Title VII's business-necessity test, the Commission has revised the rule to make clear that none of the considerations is a required element of the RFOA defense. As noted above, the rule now refers to a non-exhaustive description of ''relevant considerations'' and expressly states that no specific consideration need be present for a differentiation to be based on reasonable factors other than age. The importance of each consideration will necessarily vary according to the facts of each particular situation.

The final rule retains the impact-assessment and harm considerations, which have been redesignated 1625.7(e)(2)(iv) and 1625.7(e)(2)(v). The Commission has deleted the reference to ''took steps'' from 1625.7(e)(2)(iv) to make clear that the consideration focuses on the extent to which the employer actually assessed the impact rather than on the steps the employer took to do so. What an employer reasonably should do to assess impact depends on the facts of the particular situation. For example, an employer that assesses the race- and sex-based impact of an employment practice would appear to act unreasonably if it does not similarly assess the age-based impact. A small employer that does not generally conduct impact analyses on any basis, however, may well be able to show that its RIF decisions were reasonable even if it did not conduct a formal disparate-impact analysis during the RIF. Similarly, evidence that a policy was not the type normally subject to disparate-impact analysis would support an employer's argument that it should not reasonably be expected to conduct such analysis. Whether or not a formal disparate-impact analysis is done, if the impact is sufficiently large that the employer was or should have been aware of it, a failure to have taken reasonable steps to avoid or mitigate the impact is relevant to whether the employer's actions were based on reasonable factors other than age.

For purposes of clarity, section 1625.7(e)(2)(v) now refers to the ''degree'' rather than ''severity'' of the harm and the ''extent'' of injury. The final rule also changes the term ''minimize'' to ''reduce'' with respect to the assessment of the harm caused by different options to make clear that the rule does not require the adoption of the least discriminatory alternative.

Consideration of the degree of harm on individuals is measured both in terms of the scope of the injury to the individual and the scope of the impact, i.e., the number of persons affected. *Smith* exemplifies negligible harm in terms of injury and impact. In *Smith,* the injury was relatively minor as the raises affecting older workers were actually higher in dollar terms, although lower in percentage terms.[70] The number of older workers affected was also relatively small.

In contrast, the more severe the harm, the greater the care that ought to be exercised.[71] The *Meacham* case exemplifies significant injury and impact from the loss of jobs affecting a ''startlingly skewed'' group of older workers.[72] In light of such significant injury and impact, it would be reasonable for an employer to investigate the reasons for such results and attempt to reduce the impact as appropriate.

The extent to which the employer took steps to reduce the harm to older workers in light of the burden of undertaking such steps is relevant to reasonableness. Whether an employer knew or reasonably should have known of measures that would reduce harm informs the reasonableness of the

Watson, 487 U.S. at 990); *see also Meacham* v. *Knolls Atomic Power Lab.,* 461 F.3d 134, 139 (2d Cir. 2006) (unaudited reliance on supervisors' subjective judgment of employees' flexibility and criticality constituted a specific employment practice), *vacated on other grounds,* 554 U.S. 84 (2008).

[68] *Smith,* 544 U.S. at 243.

[69] 487 U.S. at 998.

[70] *Smith,* 544 U.S. at 241–42.

[71] *Cf.* Restatement (Second) of Torts, 298 cmt. b (1965) (''The greater the danger, the greater the care which must be exercised.'').

[72] *Meacham* v. *Knolls Atomic Power Lab.,* 461 F.3d 134, 145 (2d Cir. 2006), *vacated,* 544 U.S. 84 (2008).

employer's choices.[73] Thus, the RFOA includes consideration of the availability of measures to reduce harm, and the extent to which the employer weighed the harm to older workers against both the costs and efficiencies of using other measures that will achieve the employer's stated business purpose.

Given the relevance of the availability of measures to reduce harm contemplated by this consideration, the Commission has deleted the last factor concerning the availability of options. In addition, commenters misconstrued the consideration of options as requiring employers to search out every possible alternative and use the least discriminatory alternative, comparable to the Title VII's requirement, which the Supreme Court in *Smith* reasoned is not mandated by the RFOA defense.[74]

The Commission disagrees with commenters' views that *Smith* means that the consideration of alternative or equally effective practices is irrelevant. *Smith* stated that the RFOA does not impose Title VII's ''requirement'' that the employer must adopt a less discriminatory alternative.[75] This statement does not mean that options or alternatives are irrelevant to the determination of reasonableness. As previously explained, the availability of options is manifestly relevant to the issue of reasonableness.[76] A chosen practice might not be reasonable if an employer knew of and ignored an equally effective option that would have had a significantly less severe impact on older workers. Whereas Title VII requires an employer to adopt an equally effective, even marginally less discriminatory alternative, an employer's choice not to use an alternative that only marginally reduces the impact might be reasonable under the ADEA.

The changes to 1625.7(e) clarify that the RFOA standard is lower than Title VII's ''business necessity'' standard.[77] They also clarify that the considerations relevant to the RFOA determination are not required elements of the RFOA defense. These changes ensure that employers may continue to make reasonable business decisions that do not arbitrarily limit the employment opportunities of older workers.

Regulatory Procedures

Executive Orders 13563 and 12866

This final rule has been drafted and reviewed in accordance with Executive Order (''E.O.'') 13563 and E.O. 12866. Executive Order 13563 directs agencies to propose or adopt a regulation only upon a reasoned determination that its benefits justify its cost (recognizing that some benefits and costs are difficult to quantify); tailor its regulations to impose the least burden on society, consistent with obtaining regulatory objectives; and select, in choosing among alternative regulatory approaches, those approaches that maximize net benefits (including potential economic, environmental, public health and safety, and other advantages; distributive impacts; and equity). Executive Order 12866 directs agencies to submit a regulatory impact analysis for those regulatory actions that are ''economically significant'' within the meaning of section 3(f)(1).''[78] A regulatory action is economically significant under section 3(f)(1) if it is anticipated (1) to ''[h]ave an annual effect on the economy of $100 million or more,'' or (2) to ''adversely affect in a material way the economy, a sector of the economy, productivity, competition, jobs, the environment, public health or safety, or State, local, or tribal governments or communities.''[79] Executive Order 13563 reaffirms the principles established by E.O. 12866, and further emphasizes the need to reduce regulatory burden to the extent feasible and permitted by law.[80]

As reported in the February 2010 NPRM, the Commission determined that the rule is not economically significant under this standard, and therefore that a full regulatory impact analysis was not required. However, some comments received during the notice and comment period suggested, without specifically mentioning the Commission's determination under E.O. 12866, that the rule would impose greater costs on regulated entities than the Commission anticipated. To ensure that regulatory burdens are minimized, the Commission reexamined its basis for determining that the rule is not economically significant in light of the comments. It concluded that the determination did not need to be changed, and that the commenters' stated concerns about costs reflected a misunderstanding of the rule. The final rule has been revised to obviate such misunderstanding. For the record, the Commission presents its analysis of the impact of the rule on regulated entities and responds to the public comments below.

Analysis

The purpose of the rule is to help explain the implications of the Supreme Court's decisions in *Smith*[81] and *Meacham*[82] and the type of conduct that would support an RFOA defense in court. It therefore does not require any action on the part of covered entities.[83] Rather, it provides assistance to covered entities regarding what they can do to ensure that their practices are based on reasonable factors other than age. The rule does not expand the coverage of the ADEA to additional employers or employees. It also does not include reporting, recordkeeping, or other requirements for compliance. Accordingly, the Commission concluded that efforts to comply with the rule will not have an annual effect on the economy of $100 million or more or adversely affect in a material way the economy, a sector of the economy, productivity, competition, jobs, the environment, public health or safety, or State or local tribal governments or communities.

However, the Commission recognizes that some covered entities may choose to modify their business practices in light of the recent Supreme Court decisions reflected in the rule, and the provisions in the rule itself, to avoid disparate-impact liability. Therefore, in

[73] *Cf.* Restatement (Second) of Torts 292 cmt. c (1965) (''If the actor can advance or protect his interest as adequately by other conduct which involves less risk of harm to others, the risk contained in his conduct is clearly unreasonable.'').

[74] 544 U.S. at 243.

[75] 42 U.S.C. 2000e–2(k)(1)(A)(ii), 2000e–2(k)(1)(C) (adopting pre-*Wards Cove* approach to ''alternative employment practice''). The RFOA standard does not require the employer to select the least discriminatory option. *Smith,* 544 U. S. at 243.

[76] In addition, the failure to adopt a less discriminatory alternative may be evidence of pretext under certain circumstances. *Watson,* 487 U.S. at 998; *see also Wards Cove Packing Co.* v. *Atonio,* 490 U.S. 642, 660–61 (1989) (refusal to adopt less discriminatory alternative ''would belie a claim [that challenged] practices are being employed for nondiscriminatory reasons'').

[77] 42 U.S.C. 2000e–2(k)(1)(A)(i).

[78] Executive Order 12866 refers to ''those matters identified as, or determined by the Administrator of OIRA to be, a significant regulatory action within the scope of section 3(f)(1).'' *Id.* The Office of Management & Budget states that ''Executive Order 12866 requires agencies to conduct a regulatory analysis for economically significant regulatory actions as defined by Section 3(f)(1).'' Circular A–4 (Sept. 17, 2003), *available at http://www.whitehouse.gov/omb/circulars_a004_a-4.*

[79] Exec. Order No. 12866, 58 FR 51735 (Oct. 4, 1993), *available at http://www.whitehouse.gov/sites/default/files/omb/inforeg/eo12866.pdf.*

[80] Exec. Order No. 13563, 76 FR 3821 (Jan. 21, 2011).

[81] 544 U.S. 228 (2005).

[82] 554 U.S. 84 (2008).

[83] The ADEA applies to employers with 20 or more employees, labor organizations, employment agencies, and government entities. There are approximately 639,288 businesses with 20 or more employees. United States Small Bus. Ass'n, *Employer Firms, Establishments, Employment, and Annual Payroll Small Firm Class Sizes, 2007,* Table in Firm Data, *http://archive.sba.gov/advo/research/us_07ss.pdf* (last visited Feb. 15, 2012). There are approximately 17,000 employment agencies. Am. Staffing Ass'n., *Staffing FAQs, http://www.americanstaffing.net/statistics/faqs.cfm* (last visited Feb. 15, 2012).

addition to determining that the rule imposes no requirements that have an economic impact, the Commission investigated whether this type of voluntary, precautionary behavior would have a significant impact on the economy.

Cost of Disparate-Impact Analyses

Because paragraph 1625.7(e)(2)(iv) of the rule states that ''[t]he extent to which the employer assessed the adverse impact of its employment practice on older workers'' is relevant to the RFOA defense, some covered entities may perform additional disparate-impact analyses in response to the rule. The first step of the Commission's inquiry was therefore to determine the economic consequences of performing additional analyses.

The Commission does not anticipate that this final rule will motivate large numbers of employers to perform additional disparate-impact analyses for the following reasons. First, the current regulation assumed that employers would routinely analyze job actions susceptible to disparate-impact claims for potential adverse effects on older workers, and many employers, especially larger ones, already do so. Some do so to reduce potential liability for ADEA claims; others simply wish to avoid disproportionately negative treatment of older workers.

Second, few job actions would be subject to disparate-impact analysis.[84] For example, voluntary terminations and individual terminations for cause generally will not be subject to disparate-impact analysis. Third, even actions that involve practices amenable to disparate-impact analysis do not always require such analysis to ensure that a practice is reasonable. The rule states that, to demonstrate the RFOA defense, a covered entity needs to show only that it acted as would a prudent employer mindful of the requirements of the ADEA. In many cases, a prudent employer may reasonably decide that a formal disparate-impact analysis is unnecessary, for example because—

—The number of affected employees is relatively small, making impact readily ascertainable without formal analysis; or

—The employer has reason to believe that the practice will not negatively impact older workers, and no employees or applicants have alleged that it would have such impact.

Further, where the covered entity determines that a disparate-impact analysis is warranted, the associated costs will generally be minimal. Larger businesses already routinely employ sophisticated methods of detecting disparate impact on the basis of race, ethnicity, or gender, and therefore already possess the expertise and resources required to analyze age data for impact. Because performing an additional analysis using these pre-existing resources takes little time, the associated costs will be minimal.

Although smaller entities may be less familiar with disparate-impact analysis, such entities are even less likely to incur costs for performing formal analyses, for two reasons. First, the average small entity's involuntary termination or other selection decisions will most often involve such a small number of employees that impact will be readily ascertainable without formal analysis. Second, where the numbers are large enough to warrant a more formal analysis, the RFOA defense only requires an entity to take steps that are reasonable under the circumstances to uncover potential impact. A small entity without many resources will likely be able to show that it acted reasonably by using the same methods it uses to detect disparate impact on the basis of race, ethnicity, or gender, which can often be carried out using free, readily available Internet tools. By conducting a Web search for the term ''online disparate-impact analysis calculator,'' a small entity may find and use an online calculator that can be easily used by lay people. This tool would enable the entity to test for adverse impact in less than 10 minutes. Additional steps to evaluate adverse impact would be reasonable only if, in light of the circumstances and available resources, a prudent employer mindful of ADEA requirements would take such steps.

Moreover, if a small entity determines that it requires assistance to perform these or other efforts to prevent age discrimination in employment, it may rely on free outreach materials from the Commission. The Commission expects to issue free small-business-oriented guidance materials discussing this rule, including technical assistance specifically designed to instruct small entities how to perform disparate-impact analyses and interpret the results.

Cost of Taking Steps To Reduce Harm

Paragraph 1625.7(e)(2)(v) states that ''[t]he degree of the harm [to older workers], in terms of both the extent of injury and the numbers of persons adversely affected, and the extent to which the employer took steps to reduce the harm, in light of the burden of undertaking such steps'' is relevant to the RFOA determination.

Steps to reduce harm to older individuals only become relevant to the RFOA defense where the employer knew or reasonably should have known of measures to reduce such harm while effectively achieving its stated business purpose. Again, the Commission's analysis is limited by the paucity of data that currently exist. However, because so few job actions involve neutral employment practices that disproportionately harm older workers,[85] only a small percentage of employer decisions will even present the opportunity for employers to consider steps to reduce harm to older individuals. Of these cases, only a subset will be ones in which the employer knew or reasonably should have known of measures to reduce such harm while effectively achieving its stated business purpose. Thus, such considerations will be relevant only in a very small percentage of cases. Further, as stated expressly in the consideration, the determination whether steps are relevant to the RFOA defense is made in light of the burdens associated with such steps. Therefore, a business would not be required to take steps that were overly burdensome.

Cost of Instruction and Guidance

Paragraph 1625.7(e)(2)(ii) states that ''[t]he extent to which the employer defined the factor accurately and applied the factor fairly and accurately, including the extent to which managers and supervisors were given guidance or training about how to apply the factor and avoid discrimination'' is relevant to the RFOA determination. Paragraph 1625.7(e)(2)(iii) states that ''[t]he extent to which the employer limited supervisors' discretion to assess

[84] While the Commission is not aware of data on the number of job actions performed per year that may give rise to a disparate-impact claim, there is research on the number of disparate-impact cases filed in federal court under all of the employment discrimination laws. An analysis of 1,788 randomly selected employment discrimination cases filed in federal court, and reported between 1987–2003, showed that only 4% raised disparate-impact claims. Laura Beth Nielsen et al., *Contesting Workplace Discrimination in Court: Characteristics and Outcomes of Federal Employment Discrimination Litigation 1987–2003* 11 (2008), *http://www.americanbarfoundation.org/uploads/cms/documents/nielsen_abf_edl_report_08_final.pdf.* ADEA disparate-impact claims are only a subset of this 4%, as ADEA cases only comprised 20% of the total number of cases studied. *Id.* at 9.

[85] As previously noted, the percentage of federal employment discrimination cases raising disparate-impact claims is approximately 4%. *Id.* at 11. A review of the ADEA disparate-impact cases available on Westlaw reveals that approximately 70% failed to reach the RFOA issue altogether, because the Plaintiff could not establish impact, leaving only 1.2% of cases.

employees subjectively, particularly where the criteria that the supervisors were asked to evaluate are known to be subject to negative age-based stereotypes'' is relevant. Therefore, the rule may motivate some employers to provide additional instruction, guidance, and training to their supervisors.

In many cases, no instruction will be required to avoid age discrimination. As noted, voluntary resignations do not raise a question of disparate impact. Even where the employment action involves application of selection or termination criteria, instruction will not always be needed. For example, instruction to avoid age-based stereotyping will be unnecessary if the selection criteria are objective.

Where instruction is needed, the associated costs will generally be de minimis. Larger employers will not incur significant costs because they already provide regular training for supervisors, including regular EEO training. Any instructions necessary to avoid age-biased applications of selection or termination criteria may easily be incorporated into this regular training.

Smaller businesses are even less likely to incur additional training costs. Because of the small number of people involved, many layoff decisions made by small entities are relatively straightforward, making instruction unnecessary to avoid age-biased applications of employment criteria. Further, even where some instruction is appropriate, entities small in size can typically provide such instruction informally, thereby avoiding costs associated with formal training. In addition, a small business wanting help with its training, or with other efforts to reduce adverse impact on older workers, may rely on the Commission's assistance. Each year, the Commission performs a very large number of free outreach presentations for employers, human resource managers, and their counsel, as well as fee-based training sessions offered at approximately $350. In fiscal year 2009 alone, the Commission offered 1,889 no-cost outreach events that addressed ADEA compliance, reaching more than 127,000 people, many of whom were from small businesses, and offered approximately 300 fee-based private-sector trainings that reached more than 13,000 people. In addition, the Commission expects to issue small-business-oriented guidance materials discussing the rule, as it has done in other contexts.[86]

Benefits of the Rule

Under E.O. 13563, the Commission must assess not only the rule's negative effects on the economy but also its positive effects. Here again, the Commission's assessment was necessarily limited by the data that currently exist. Indeed, doing this assessment highlights the need for more focused research on the economic costs and benefits of ensuring equal employment opportunity. Nevertheless, on the basis of the general considerations below, the Commission determined that the rule will have modest positive effects on the economy.

—Providing additional instruction about how to implement employment practices in a manner that is free from age bias carries the benefit of obtaining more accurate employee evaluations. As stated in the section-by section analysis above, research demonstrates that negative age-based stereotypes are not only harmful to older individuals but also inaccurate—a large number of empirical studies and research reviews indicate that there is a nonexistent or slightly positive relationship between job performance and older age.[87] These data suggest that taking measures to eliminate age bias in selection and termination can actually improve the employer's bottom line.

—Data show that older individuals who become unemployed have more difficulty finding a new position and tend to stay unemployed longer than younger individuals.[88] To the extent that the difficulty in finding new work is attributable to neutral practices that act as barriers to the employment of older workers, the regulation should help to reduce the rate of their unemployment and, thus, help to reduce these unique burdens on society. This effort is likely to become increasingly important as the Baby Boom Generation grows older, raising the number of older individuals in the workforce.[89]

—Encouraging employers to avoid practices that adversely affect older workers will reduce employers' litigation costs. In a disparate-impact case, the plaintiff has the initial burden of demonstrating that the challenged practice has a disproportionately negative effect on the protected group. If an employer less frequently uses practices that have a disproportionately negative effect on older workers, older individuals will less frequently have reason to allege discrimination.

—The rule will also reduce employers' litigation costs by eliminating the considerable uncertainty left after the Supreme Court's decisions in *Smith*[90] and *Meacham*.[91] Although the Court clearly held that employers asserting the RFOA defense do not need to demonstrate that the practice is a business necessity, as required by the current regulations,[92] it did not provide guidance on the application of the RFOA standard. Because employers bear the burden of proving that their actions were based on reasonable factors other than age, they will benefit from a greater ability to assess their own liability as a result of the rule, and therefore to avoid litigation.

The Commission also concludes that a wide range of qualitative, dignitary, and related intrinsic benefits must be considered. These benefits include the values identified in E.O. 13563, such as equity, human dignity, and fairness. Specifically, the qualitative benefits attributable to the final rule include but are not limited to the following:

—Reducing discrimination against older individuals promotes human dignity and self-respect, and diminishes feelings of exclusion and humiliation.

—Reducing discrimination against older individuals also yields third-party benefits such as a reduction in the prevalence of age-based stereotypes and associated stigma.

[86] *See, e.g.,* Equal Employment Opportunity Comm'n, The ADA: A Primer for Small Business, *http://www.eeoc.gov/ada/adahandbook.html.*

[87] *See supra* notes 53–57.

[88] *See Impact of Economy on Older Workers: Meeting of the Equal Employment Opportunity Comm'n* (2010) (written testimony of William E. Spriggs, Ph.D.), *available at http://www.eeoc.gov/eeoc/meetings/11–17–10/spriggs.cfm* (citing Bureau of Lab. Statistics, Unemployed Persons by Age, Sex, Race, Hispanic or Latino Ethnicity, Marital Status, and Duration of Unemployment, *http://www.bls.gov/web/empsit/cpseea36.pdf* (last visited Mar. 12, 2011); Bureau of Lab. Statistics, *Displaced Workers Summary* (Aug. 26, 2010, 10 a.m.), *http://www.bls.gov/news.release/disp.nr0.htm*).

[89] *Id.* (citing Bureau of Lab. Statistics, *Employment Projections* (Dec. 10, 2009, 10 a.m.), *http://www.bls.gov/news.release/ecopro.nr0.htm* (reporting that the number of persons in the labor force age 55 years and older is expected to increase by 43 percent by 2018).

[90] 544 U.S. 228 (2005).

[91] 554 U.S. 84 (2008).

[92] *See* 29 CFR 1625.7(d), 46 FR 47724 (Sept. 29, 1981) (amended herein) (''When an employment practice, including a test, is claimed as a basis for different treatment of employees or applicants for employment on the grounds that it is a 'factor other than' age, and such practice has an adverse impact on individuals within the protected age group, it can only be justified as a business necessity.'').

—Increased participation in the workforce by older individuals benefits both employers and coworkers in ways that may not be subject to monetary quantification, including increasing diversity, understanding, and fairness in the workplace.
—Reducing discrimination against older individuals benefits workers in general and society at large by creating less discriminatory work environments.

Public Comments

The comments suggesting that the rule will impose economic burdens were as follows:

—Six commenters stated that the rule would require employers to monitor or analyze employment decisions for adverse impact on older workers. One of these commenters stated more specifically that the rule would require employers to compare the impact of each practice on employees of every age with its impact on employees of every other age. Another commenter thought that disparate-impact analysis would require employers to collect age information about its applicants and employees.
—Four commenters asserted that the rule would require employers to search for and evaluate alternative means of achieving their business goals. One stated more specifically that the number of alternatives that employers must evaluate under the rule is ''potentially infinite.''
—One commenter asserted that the rule imposed a duty on employers to provide training, instruction, or guidance to its supervisors. Other commenters asserted that the rule required employers to provide training to supervisors in order to limit the discretion that they exercise when assessing employees subjectively, particularly with respect to factors known to be susceptible to age-based stereotypes.[93]
—One commenter stated that the rule would require employers to hire consultants to determine whether their practices are ''common business practices.''
—One commenter asserted that the rule would make it much harder for employers to win even the most frivolous of age discrimination claims at the summary judgment stage. The same commenter asserted that the rule would require litigants to engage in extensive discovery to determine whether each of the listed factors had been met, including whether the employer considered alternatives and whether it took steps to minimize harm to older workers.

Commission Response

The comments do not alter the Commission's conclusion that the rule will not impose unacceptable or unreasonable costs on society. As previously noted, the comments were based on a misunderstanding of the proposed rule, and the final rule was revised to obviate such misapprehension. As shown above, any costs associated with the rule will be minimal.

Response to Comments Regarding the Cost of Disparate-Impact Analyses

The comments overstate the number of disparate-impact analyses that will be performed by employers as a result of the rule. As explained above, a disparate-impact analysis is appropriate in only a small proportion of job actions, is already done by many employers pursuant to existing regulations and case law, and, even where the practice is amenable to disparate-impact analysis, such analysis is not always required to ensure that a practice is reasonable. If an impact analyses is done, neither existing law nor this regulation would require it to compare the practice's impact on individuals of every age with its impact on individuals of every other age. The RFOA defense requires only such steps as would be taken by a prudent employer mindful of the requirements of the ADEA.

The Commission disagrees with the assertion of one commenter that obtaining the required age data would be burdensome. Generally, employees' birth dates are available to employers because they are recorded in personnel files.

Response to Comments Regarding the Cost of Evaluating Alternatives

As explained above, the Commission has deleted the factor discussing the availability of other ways for the employer to achieve its stated business purpose, because commenters misunderstood the factor to mean that employers must search out every possible alternative (or, in the words of one commenter, a ''potentially infinite'' number of alternatives) and use the one that is least discriminatory. Of course, as also explained above, the deletion of the factor does not mean that the availability of other measures to achieve the employer's purposes is irrelevant to the defense. Whether an employer knew or reasonably should have known of measures that would reduce harm informs the reasonableness of the employer's choices.

Because so few job actions involve neutral employment practices that disproportionately harm older workers, only a small percentage of employer decisions will even present the opportunity for employers to consider the relative harm of various options.[94] Only a subset of these actions will be ones in which the employer knew or reasonably should have known of measures that would reduce harm to older individuals. Further, when an employer does decide to evaluate whether another option would reduce harm to older individuals, it may do so using the same low-cost methods that were described above in the discussion of the cost of disparate-impact analyses. Overall costs are therefore likely to be extremely low.

Response to Comments Regarding the Cost of Instruction and Guidance

The comments assert generally that the additional training will be burdensome. As explained in the analysis above, training costs associated with the rule will be minimal.

Response to Comments Regarding the Cost of Determining Whether a Business Practice Is Common

The Commission has deleted the factor concerning whether a business practice is common from the considerations. Therefore, the Commission need not discuss the commenter's assertion that this factor requires businesses to hire consultants to determine whether their practices are common.

Response to Comments Regarding the Cost of Frivolous Litigation

The Commission disagrees with one commenter's assertion that the rule would increase employers' vulnerability to frivolous litigation or make it more difficult for employers to win against frivolous claims at the summary

[93] Some commenters interpreted the February 2010 NPRM as asserting that employers should not assess employee qualities such as flexibility, willingness to learn, and technological skills (qualities that are often assessed subjectively). These commenters objected that the rule would deprive employers of their ability to seek out employees with these qualities, which are valuable in the workplace. The Commission does not assert that employers should not seek out employees with these qualities, or that they are not valuable. It does maintain, however, that if employers assess qualities such as flexibility, willingness to learn, and technological skills, they should take reasonable steps to ensure that the assessments are accurate and not influenced by common age-based stereotypes. Such steps may include providing an objective means of assessing the desired quality and instructing managers how to be fair in their evaluations.

[94] *See supra* note 87.

judgment stage. Of course, individuals may file frivolous litigation regardless of the underlying law. Further, even without the rule, determining whether a practice is a based on reasonable factors other than age is a fact-specific inquiry; the commenter provided no reason to conclude that the considerations in the final rule are any more complicated than other facts relevant to the RFOA analysis. Indeed, as noted, the Commission concludes the rule is likely to reduce employers' litigation costs.

Conclusion

For the foregoing reasons, the Commission has determined that the final rule will not have an annual effect on the economy of $100 million or more or adversely affect in a material way the economy, a sector of the economy, productivity, competition, jobs, the environment, public health or safety, or State or local tribal governments or communities.

Regulatory Flexibility Act

The purpose of the Regulatory Flexibility Act (RFA), 5 U.S.C. 601–612, is to ensure that statutory goals are achieved without imposing unnecessary and unjustifiable regulatory burdens on small businesses and other small entities, which may have few resources to devote to regulatory compliance. To achieve this purpose, the RFA requires federal agencies to conduct a series of analyses on proposed rules. The analyses are designed to ensure that the agency considers ways of minimizing any significant regulatory burdens imposed on small entities by the rules.

The goal of the analysis is to determine whether the proposed rule will have a significant economic impact on a substantial number of small entities. If it will, the agency must consider alternative regulatory approaches that may minimize the impact. If the rule will not have a significant impact on a substantial number of small entities, it may so certify under 5 U.S.C. 605(b).

In the February 2010 NPRM, the Commission certified under 5 U.S.C. 605(b) that the proposed rule would not have a significant economic impact on a substantial number of small entities, and therefore did not include an initial regulatory flexibility analysis. Although the final rule covers a substantial number of small entities,[95] the Commission's threshold analysis indicated that, for the reasons discussed in detail in the section on Executive Order 12866 above, the costs imposed by the rule generally are de minimis and therefore would not significantly impact small business.

Public Comments

Two commenters disagreed with the Commission's decision to certify the rule, and therefore requested further analysis under the RFA. One of these commenters asserted that the rule would economically impact small entities by suggesting that they keep track of alternative employment practices and the reasons for their choices, and that they give supervisors additional guidance and training. In light of these comments and the comments discussed above regarding E.O. 12866, the Commission reexamined the factual basis for its certification.

Commission Response

The comments provide no reason to alter the Commission's initial conclusion that the rule will not impose unnecessary or unjustifiable regulatory burdens on small entities. The comments did not include any factual basis for their assertions and, for reasons specifically discussed in the E.O. 12866 analysis above, the Commission has determined that small entities are unlikely to incur costs as a result of this rule.

As explained above, the rule will seldom be implicated in actions by small employers because issues of age-based disparate impact are most likely to arise in the context of mass terminations, hiring based on tests, or other practices involving significant numbers of individuals. Although there are no data available that speak specifically to this issue, the Commission estimates that the average small entity is unlikely to be involved in even one such practice. If a small employer were to engage in such a practice, moreover, the number of individuals affected is likely to be so small that impact can be ascertained without resort to formal disparate-impact analysis. If the employer wants to do such analysis, free and easy to use tools are available on the Internet. Therefore, the Commission disagrees with the commenter that small entities will be significantly burdened by additional impact analyses performed as a result of the rule.

The Commission also disagrees that small entities will be significantly burdened by the need to keep track of alternative employment practices and the reasons for their choices. As explained above, consideration of alternative employment practices would be relevant only in a very small percentage of cases.[96] Further, if a small employer undertook a neutral practice that disproportionately harmed older workers, the determination of the reasonableness of the factor it used would be made in light of its resources. The entity's resources also inform the determination of whether it would be reasonable for it to take, or not to take, further steps to reduce harm. Therefore, small employers will not be disproportionately burdened by this aspect of the rule.

For the reasons explained above, the Commission disagrees with the commenter's assertion that small entities will be significantly burdened by additional guidance and training performed as a result of the rule. Indeed, the rule is likely to have little impact on small employers.

Conclusion

For the foregoing reasons, the Commission certifies pursuant to section 605(b) of the Regulatory Flexibility Act, 5 U.S.C. 605(b), that this rule will not have a significant economic impact on a substantial number of small entities.

Paperwork Reduction Act

This final rule contains no new or revised information collection requirements subject to review by the Office of Management and Budget under the Paperwork Reduction Act (44 U.S.C. chapter 35).

Unfunded Mandates Reform Act of 1995

This final rule will not result in the expenditure by state, local, or tribal governments, in the aggregate, or by the private sector, of $100 million or more in any one year, and it will not significantly or uniquely affect small governments. Therefore, no actions were deemed necessary under the provisions of the Unfunded Mandates Reform Act of 1995.

Congressional Review Act

To the extent that this rule is subject to the Congressional Review Act, the Commission has complied with its requirements by submitting this final rule to Congress prior to publication in the **Federal Register**.

[95] The rule covers all employers with at least 20 employees, labor organizations, employment agencies, and state and local governments. According to 2007-based statistics from the Small Business Administration, there were 620,977 businesses with 20 or more employees and fewer than 500 employees. United States Small Bus. Ass'n, *Employer Firms, Establishments, Employment, and Annual Payroll Small Firm Class Sizes, 2007,* Table in *Firm Data, http://archive.sba.gov/advo/research/us_07ss.pdf* (last visited Jan. 22, 2011).

[96] *See supra* note 94, and the accompanying text.

List of Subjects in 29 CFR Part 1625

Advertising, Age, Employee benefit plans, Equal employment opportunity, Retirement.

Dated: March 7, 2012.

For the Commission.

Jacqueline A. Berrien,

Chair.

For the reasons set forth in the preamble, the Equal Employment Opportunity Commission 29 CFR chapter XIV part 1625 is amended as follows:

PART 1625—AGE DISCRIMINATION IN EMPLOYMENT ACT

■ 1. The authority citation for part 1625 continues to read as follows:

Authority: 81 Stat. 602; 29 U.S.C. 621; 5 U.S.C. 301; Secretary's Order No. 10–68; Secretary's Order No. 11–68; Sec. 9, 81 Stat. 605; 29 U.S.C. 628; sec. 12, 29 U.S.C. 631, Pub. L. 99–592, 100 Stat. 3342; sec. 2, Reorg. Plan No. 1 of 1978, 43 FR 19807.

Subpart A—Interpretations

■ 2. In § 1625.7, revise paragraphs (b) through (e) to read as follows:

§ 1625.7 Differentiations based on reasonable factors other than age (RFOA).

* * * * *

(b) When an employment practice uses age as a limiting criterion, the defense that the practice is justified by a reasonable factor other than age is unavailable.

(c) Any employment practice that adversely affects individuals within the protected age group on the basis of older age is discriminatory unless the practice is justified by a ''reasonable factor other than age.'' An individual challenging the allegedly unlawful practice is responsible for isolating and identifying the specific employment practice that allegedly causes any observed statistical disparities.

(d) Whenever the ''reasonable factors other than age'' defense is raised, the employer bears the burdens of production and persuasion to demonstrate the defense. The ''reasonable factors other than age'' provision is not available as a defense to a claim of disparate treatment.

(e)(1) A reasonable factor other than age is a non-age factor that is objectively reasonable when viewed from the position of a prudent employer mindful of its responsibilities under the ADEA under like circumstances. Whether a differentiation is based on reasonable factors other than age must be decided on the basis of all the particular facts and circumstances surrounding each individual situation. To establish the RFOA defense, an employer must show that the employment practice was both reasonably designed to further or achieve a legitimate business purpose and administered in a way that reasonably achieves that purpose in light of the particular facts and circumstances that were known, or should have been known, to the employer.

(2) Considerations that are relevant to whether a practice is based on a reasonable factor other than age include, but are not limited to:

(i) The extent to which the factor is related to the employer's stated business purpose;

(ii) The extent to which the employer defined the factor accurately and applied the factor fairly and accurately, including the extent to which managers and supervisors were given guidance or training about how to apply the factor and avoid discrimination;

(iii) The extent to which the employer limited supervisors' discretion to assess employees subjectively, particularly where the criteria that the supervisors were asked to evaluate are known to be subject to negative age-based stereotypes;

(iv) The extent to which the employer assessed the adverse impact of its employment practice on older workers; and

(v) The degree of the harm to individuals within the protected age group, in terms of both the extent of injury and the numbers of persons adversely affected, and the extent to which the employer took steps to reduce the harm, in light of the burden of undertaking such steps.

(3) No specific consideration or combination of considerations need be present for a differentiation to be based on reasonable factors other than age. Nor does the presence of one of these considerations automatically establish the defense.

* * * * *

[FR Doc. 2012–5896 Filed 3–29–12; 8:45 am]

BILLING CODE 6570–01–P

DEPARTMENT OF DEFENSE

Office of the Secretary

[Docket ID: DOD–2012–OS–0031]

32 CFR Part 322

Privacy Act; Implementation; Correction

AGENCY: Office of the Secretary, DoD.

ACTION: Direct final rule with request for comments; correction.

SUMMARY: On March 16, 2012 (77 FR 15595–15596), Department of Defense published a direct final rule titled Privacy Act; Implementation. This rule corrects the paragraph identification in the added text.

DATES: This rule is effective on May 25, 2012.

FOR FURTHER INFORMATION CONTACT: Patricia Toppings, (571) 372–0485.

SUPPLEMENTARY INFORMATION: On March 16, 2012, Department of Defense published a direct final rule titled Privacy Act; Implementation. Subsequent to the publication of that direct final rule, Department of Defense discovered that paragraphs (l)(2) through (l)(5) in § 322.7 should have read paragraphs (l)(1) through (l)(4).

Correction

In the direct final rule (FR Doc. 2012–6170) published on March 16, 2012 (77 FR 15595–15596), make the following corrections:

§ 322.7 [Corrected]

On page 15596, in § 322.7, in the second column, paragraphs (l)(2) through (l)(5) are corrected to read paragraphs (l)(1) through (l)(4).

Dated: March 26, 2012.

Aaron Siegel,

Alternate OSD Federal Register Liaison Officer, Department of Defense.

[FR Doc. 2012–7596 Filed 3–29–12; 8:45 am]

BILLING CODE 5001–06–P

DEPARTMENT OF HOMELAND SECURITY

Coast Guard

33 CFR Part 165

[Docket No. USCG–2012–0121]

RIN 1625–AA87

Security Zone; USCGC STRATTON Commissioning Ceremony, Alameda, CA

AGENCY: Coast Guard, DHS.

ACTION: Temporary final rule.

SUMMARY: The Coast Guard is establishing a temporary security zone in the navigable waters of the San Francisco Bay, Alameda, CA within the San Francisco Captain of the Port (COTP) Zone. The security zone is necessary to ensure the safety of the USCGC STRATTON commissioning ceremony.

DATES: This rule is effective from 12 p.m. on March 30, 2012 to 4 p.m. on March 31, 2012.

ADDRESSES: Documents indicated in this preamble as being available in the docket are part of docket USCG–2012–0121 and are available online by going to *http://www.regulations.gov,* inserting USCG–2012–0121 in the ''Keyword'' box, and then clicking ''Search.'' They are also available for inspection or copying at the Docket Management Facility (M–30), U.S. Department of Transportation, West Building Ground Floor, Room W12–140, 1200 New Jersey Avenue SE., Washington, DC 20590, between 9 a.m. and 5 p.m., Monday through Friday, except Federal holidays.

FOR FURTHER INFORMATION CONTACT: If you have questions on this temporary rule, call or email Ensign William Hawn, U.S. Coast Guard Sector San Francisco; telephone (415) 399–7442 or email at *D11-PF-MarineEvents@uscg.mil.* If you have questions on viewing the docket, call Renee V. Wright, Program Manager, Docket Operations, telephone (202) 366–9826.

SUPPLEMENTARY INFORMATION:

Regulatory Information

The Coast Guard is issuing this temporary final rule without prior notice and opportunity to comment pursuant to authority under section 4(a) of the Administrative Procedure Act (APA) (5 U.S.C. 553(b)). This provision authorizes an agency to issue a rule without prior notice and opportunity to comment when the agency for good cause finds that those procedures are ''impracticable, unnecessary, or contrary to the public interest.'' Under 5 U.S.C. 553(b)(B), the Coast Guard finds that good cause exists for not publishing a notice of proposed rulemaking (NPRM) with respect to this rule because delay would be contrary to the public interest. The event will occur before a notice-and-comment rulemaking could be completed, thereby jeopardizing the safety and security of the commissioning ceremony.

Under 5 U.S.C. 553(d)(3), the Coast Guard finds good cause exists for making this rule effective less than 30 days after publication in the **Federal Register**. Delay would be contrary to the public interest. Delaying the effective date would be contrary to the security zone's intended objectives of mitigating potential terroristic acts and enhancing public and maritime safety and security. Immediate action is necessary to ensure the safety and security of the commissioning ceremony. The COTP finds that this temporary security zone needs to be effective by March 30, 2012, to ensure the safety of the commissioning ceremony taking place on Coast Guard Island near Alameda, California.

Background and Purpose

From March 30, 2012, through March 31, 2012, a security zone will take effect around Coast Guard Island near Alameda, California for the USCGC STRATTON Commissioning Ceremony. This area is located adjacent to U.S. navigable waters in the San Francisco Captain of the Port Zone. The Coast Guard is establishing this security zone to ensure the safety and security of the commissioning ceremony.

Discussion of Rule

This temporary final rule will be enforced from 12 p.m. on March 30, 2012 through 4 p.m. on March 31, 2012. The security zone area is located within the San Francisco Captain of the Port Zone (See 33 CFR 3.55–20) and covers all the U.S. navigable waters in the San Francisco Bay from the surface of the water to the ocean floor. This security zone will include the navigable waters around Coast Guard Island near position 37°46′56″ N, 122°14′58″ W (NAD 83).

This temporary security zone will cover the waters surrounding the Dennison Street Bridge connecting Coast Guard Island to Oakland, CA from the surface of the water to the ocean floor within 100 yards of the bridge from 12 p.m. on March 30 until 4 p.m. on March 31, 2012. This temporary security zone will also cover the waters surrounding Coast Guard Island from the surface of the water to the ocean floor within 100 yards of Coast Guard Island from 5 a.m. until 4 p.m. on March 31, 2012.

In accordance with the general regulations in 33 CFR part 165, subpart D, no person or vessel will be permitted to transit into or remain in the security zone except for authorized support vessels, aircraft and support personnel, or other vessels authorized by the Captain of the Port. Any Coast Guard commissioned, warrant, or petty officer, and any other Captain of the Port representative permitted by law, may enforce the security zone. Vessels, aircraft, or persons in violation of this rule would be subject to the penalties set forth in 33 U.S.C. 1232 and 50 U.S.C. 192.

Regulatory Analyses

We developed this rule after considering numerous statutes and executive orders related to rulemaking. Below we summarize our analyses based on 13 of these statutes and executive orders.

Regulatory Planning and Review

This rule is not a significant regulatory action under section 3(f) of Executive Order 12866, Regulatory Planning and Review, and does not require an assessment of potential costs and benefits under section 6(a)(3) of that Order. The Office of Management and Budget has not reviewed it under that Order.

Although this rule restricts access to the waters encompassed by the security zone, the effect of this rule will not be significant because the local waterway users will be notified via public Broadcast Notice to Mariners to ensure the security zone will result in minimum impact. The entities most likely to be affected are pleasure craft engaged in recreational activities.

Small Entities

Under the Regulatory Flexibility Act (5 U.S.C. 601–612), we have considered whether this rule would have a significant economic impact on a substantial number of small entities. The term ''small entities'' comprises small businesses, not-for-profit organizations that are independently owned and operated and are not dominant in their fields, and governmental jurisdictions with populations of less than 50,000.

The Coast Guard certifies under 5 U.S.C. 605(b) that this rule will not have a significant economic impact on a substantial number of small entities. This rule will affect the following entities, some of which may be small entities: the owners and operators of vessels intending to operate in the impacted section of the San Francisco Bay during times when this rule is being enforced.

This rule is most likely to affect owners and operators of pleasure craft engaged in recreational activities and sightseeing.

This rule will not have a significant economic impact on a substantial number of small entities for several reasons: (i) Vessel traffic can pass safely around the area, (ii) vessels engaged in recreational activities and sightseeing have ample space outside of the effected portion of the areas off San Francisco, CA to engage in these activities, (iii) this rule will encompass only a small portion of the waterway for a limited period of time, and (iv) the maritime public will be advised in advance of this security zone via Broadcast Notice to Mariners.

Assistance for Small Entities

Under section 213(a) of the Small Business Regulatory Enforcement

Fairness Act of 1996 (Pub. L. 104–121), we offer to assist small entities in understanding the rule so that they can better evaluate its effects on them and participate in the rulemaking process.

Small businesses may send comments on the actions of Federal employees who enforce, or otherwise determine compliance with, Federal regulations to the Small Business and Agriculture Regulatory Enforcement Ombudsman and the Regional Small Business Regulatory Fairness Boards. The Ombudsman evaluates these actions annually and rates each agency's responsiveness to small business. If you wish to comment on actions by employees of the Coast Guard, call 1–888–REG–FAIR (1–888–734–3247). The Coast Guard will not retaliate against small entities that question or complain about this rule or any policy or action of the Coast Guard.

Collection of Information

This rule calls for no new collection of information under the Paperwork Reduction Act of 1995 (44 U.S.C. 3501–3520).

Federalism

A rule has implications for federalism under Executive Order 13132, Federalism, if it has a substantial direct effect on State or local governments and would either preempt State law or impose a substantial direct cost of compliance on them. We have analyzed this rule under that Order and have determined that it does not have implications for federalism.

Unfunded Mandates Reform Act

The Unfunded Mandates Reform Act of 1995 (2 U.S.C. 1531–1538) requires Federal agencies to assess the effects of their discretionary regulatory actions. In particular, the Act addresses actions that may result in the expenditure by a State, local, or tribal government, in the aggregate, or by the private sector of $100,000,000 or more in any one year. Though this rule will not result in such an expenditure, we do discuss the effects of this rule elsewhere in this preamble.

Taking of Private Property

This rule will not cause a taking of private property or otherwise have taking implications under Executive Order 12630, Governmental Actions and Interference with Constitutionally Protected Property Rights.

Civil Justice Reform

This rule meets applicable standards in sections 3(a) and 3(b)(2) of Executive Order 12988, Civil Justice Reform, to minimize litigation, eliminate ambiguity, and reduce burden.

Protection of Children

We have analyzed this rule under Executive Order 13045, Protection of Children from Environmental Health Risks and Safety Risks. This rule is not an economically significant rule and does not create an environmental risk to health or risk to safety that may disproportionately affect children.

Indian Tribal Governments

This rule does not have tribal implications under Executive Order 13175, Consultation and Coordination with Indian Tribal Governments, because it does not have a substantial direct effect on one or more Indian tribes, on the relationship between the Federal Government and Indian tribes, or on the distribution of power and responsibilities between the Federal Government and Indian tribes.

Energy Effects

We have analyzed this rule under Executive Order 13211, Actions Concerning Regulations That Significantly Affect Energy Supply, Distribution, or Use. We have determined that it is not a ''significant energy action'' under that order because it is not a ''significant regulatory action'' under Executive Order 12866 and is not likely to have a significant adverse effect on the supply, distribution, or use of energy. The Administrator of the Office of Information and Regulatory Affairs has not designated it as a significant energy action. Therefore, it does not require a Statement of Energy Effects under Executive Order 13211.

Technical Standards

The National Technology Transfer and Advancement Act (NTTAA) (15 U.S.C. 272 note) directs agencies to use voluntary consensus standards in their regulatory activities unless the agency provides Congress, through the Office of Management and Budget, with an explanation of why using these standards would be inconsistent with applicable law or otherwise impractical. Voluntary consensus standards are technical standards (*e.g.,* specifications of materials, performance, design, or operation; test methods; sampling procedures; and related management systems practices) that are developed or adopted by voluntary consensus standards bodies.

This rule does not use technical standards. Therefore, we did not consider the use of voluntary consensus standards.

Environment

We have analyzed this rule under Department of Homeland Security Management Directive 023–01 and Commandant Instruction M16475.lD, which guide the Coast Guard in complying with the National Environmental Policy Act of 1969 (NEPA) (42 U.S.C. 4321–4370f), and have concluded this action is one of a category of actions that do not individually or cumulatively have a significant effect on the human environment. This rule is categorically excluded, under figure 2–1, paragraph (34)(g), of the Instruction. This rule involves establishing a security zone.

An environmental analysis checklist and a categorical exclusion determination are available in the docket where indicated under **ADDRESSES**.

List of Subjects in 33 CFR Part 165

Harbors, Marine safety, Navigation (water), Reporting and recordkeeping requirements, Security measures, and Waterways.

For the reasons discussed in the preamble, the Coast Guard amends 33 CFR part 165 as follows:

PART 165—REGULATED NAVIGATION AREAS AND LIMITED ACCESS AREAS

■ 1. The authority citation for part 165 continues to read as follows:

Authority: 33 U.S.C. 1231; 46 U.S.C. Chapter 701, 3306, 3703; 50 U.S.C. 191, 195; 33 CFR 1.05–1, 6.04–1, 6.04–6, and 160.5; Pub. L. 107–295, 116 Stat. 2064; Department of Homeland Security Delegation No. 0170.1.

■ 2. Add temporary § 165.T11–480 to read as follows:

§ 165.T11–480 Security zone; USCGC STRATTON Commissioning Ceremony, Alameda, CA

(a) *Location.* The following area, within the San Francisco Captain of the Port Zone (See 33 CFR 3.55–20), from the surface of the water to the ocean floor is a temporary security zone: All waters within 100 yards of Coast Guard Island near Alameda, CA in position 37°46′56″ N, 122°14′58″ W (NAD 83) and all waters within 100 yards of the Dennison Street Bridge connecting Coast Guard Island to Oakland, CA.

(b) *Definitions.* As used in this section, ''designated representative'' means a Coast Guard Patrol Commander, including a Coast Guard coxswain, petty officer, or other officer on a Coast Guard vessel or a Federal, State, or local officer designated by or assisting the Captain of the Port San Francisco (COTP) in the enforcement of the security zone.

(c) *Regulations.* (1) Under the general regulations in § 165.33 of this title, entry into or remaining in this security zone is prohibited unless authorized by the COTP or the COTP's designated representative.

(2) The security zone is closed to all vessel traffic, except as may be permitted by the COTP or a designated representative.

(3) Vessel operators desiring to enter or operate within the security zone must contact the COTP or a designated representative to obtain permission to do so. Vessel operators given permission to enter or operate in the security zone must comply with all directions given to them by the COTP or a designated representative. Persons and vessels may request permission to enter the security zone on VHF–16 or through the 24-hour Command Center at telephone (415) 399–3547.

(4) The U.S. Coast Guard may be assisted in the patrol and enforcement of the security zones by Federal, State, and local agencies.

(d) *Notice of Enforcement.* The Captain of the Port San Francisco will cause notice of the enforcement of the security zone described in this section to be made by verbal broadcasts and written notice to mariners and the general public.

(e) *Enforcement Period.* This security zone will be enforced around the Dennison Street Bridge from 12 p.m. on March 30 until 4 p.m. on March 31, 2012 and around Coast Guard Island from 5 a.m. until 4 p.m. on March 31, 2012.

Dated: March 14, 2012.

Cynthia L. Stowe,

Captain, U.S. Coast Guard, Captain of the Port San Francisco.

[FR Doc. 2012–7624 Filed 3–29–12; 8:45 am]

BILLING CODE 9110–04–P

ENVIRONMENTAL PROTECTION AGENCY

40 CFR Part 52

[EPA–R04–OAR–2009–0783; FRL–9653–8]

Approval and Promulgation of Implementation Plans; Commonwealth of Kentucky; Regional Haze State Implementation Plan

AGENCY: Environmental Protection Agency (EPA).

ACTION: Final rule.

SUMMARY: EPA is finalizing a limited approval and a limited disapproval of two revisions to the Kentucky state implementation plan (SIP) submitted by the Commonwealth of Kentucky through the Kentucky Energy and Environment Cabinet, Division of Air Quality (KYDAQ), on June 25, 2008, and May 28, 2010. Kentucky's June 25, 2008, and May 28, 2010, SIP revisions address regional haze for the first implementation period. Specifically, these revisions address the requirements of the Clean Air Act (CAA or Act) and EPA's rules that require states to prevent any future and remedy any existing anthropogenic impairment of visibility in mandatory Class I areas (national parks and wilderness areas) caused by emissions of air pollutants from numerous sources located over a wide geographic area (also referred to as the ''regional haze program''). States are required to assure reasonable progress toward the national goal of achieving natural visibility conditions in Class I areas. EPA is finalizing a limited approval of Kentucky's June 25, 2008, and May 28, 2010, SIP revisions to implement the regional haze requirements for Kentucky on the basis that these revisions, as a whole, strengthen the Kentucky SIP. Also in this action, EPA is finalizing a limited disapproval of these same SIP revisions because of the deficiencies in the Commonwealth's regional haze SIP revisions arising from the remand by the U.S. Court of Appeals for the District of Columbia Circuit (D.C. Circuit) to EPA of the Clean Air Interstate Rule (CAIR).

DATES: *Effective Date:* This rule will be effective April 30, 2012.

ADDRESSES: EPA has established a docket for this action under Docket Identification No. EPA–R04–OAR–2009–0783. All documents in the docket are listed on the *www.regulations.gov* Web site. Although listed in the index, some information is not publicly available, i.e., Confidential Business Information or other information whose disclosure is restricted by statute. Certain other material, such as copyrighted material, is not placed on the Internet and will be publicly available only in hard copy form. Publicly available docket materials are available either electronically through *www.regulations.gov* or in hard copy at the Regulatory Development Section, Air Planning Branch, Air, Pesticides and Toxics Management Division, U.S. Environmental Protection Agency, Region 4, 61 Forsyth Street SW., Atlanta, Georgia 30303–8960. EPA requests that if at all possible, you contact the person listed in the **FOR FURTHER INFORMATION CONTACT** section for further information. The Regional Office's official hours of business are Monday through Friday, 8:30 to 4:30, excluding federal holidays.

FOR FURTHER INFORMATION CONTACT: Michele Notarianni, Regulatory Development Section, Air Planning Branch, Air, Pesticides and Toxics Management Division, U.S. Environmental Protection Agency, Region 4, 61 Forsyth Street SW., Atlanta, Georgia 30303–8960. Michele Notarianni can be reached at telephone number (404) 562–9031 and by electronic mail at *notarianni.michele@epa.gov.*

SUPPLEMENTARY INFORMATION:

Table of Contents

I. What is the background for this final action?
II. What is EPA's response to comments received on this action?
III. What is the effect of this final action?
IV. Final Action
V. Statutory and Executive Order Reviews

I. What is the background for this final action?

Regional haze is visibility impairment that is produced by a multitude of sources and activities which are located across a broad geographic area and emit fine particles (e.g., sulfates, nitrates, organic carbon, elemental carbon, and soil dust), and their precursors (e.g., sulfur dioxide (SO_2), nitrogen oxides (NO_X), and in some cases, ammonia and volatile organic compounds (VOC)). Fine particle precursors react in the atmosphere to form fine particulate matter ($PM_{2.5}$) which impairs visibility by scattering and absorbing light. Visibility impairment reduces the clarity, color, and visible distance that one can see. $PM_{2.5}$ can also cause serious health effects and mortality in humans and contributes to environmental effects such as acid deposition and eutrophication.

In section 169A of the 1977 Amendments to the CAA, Congress created a program for protecting visibility in the nation's national parks and wilderness areas. This section of the CAA establishes the ''prevention of any future, and the remedying of any existing, impairment of visibility in mandatory Class I areas which impairment results from manmade air pollution'' as a national goal. On December 2, 1980, EPA promulgated regulations to address visibility impairment in Class I areas that is ''reasonably attributable'' to a single source or small group of sources, i.e., ''reasonably attributable visibility impairment.'' *See* 45 FR 80084. These regulations represented the first phase in addressing visibility impairment. EPA deferred action on regional haze

that emanates from a variety of sources until monitoring, modeling, and scientific knowledge about the relationships between pollutants and visibility impairment were improved.

Congress added section 169B to the CAA in 1990 to address regional haze issues. EPA promulgated a rule to address regional haze on July 1, 1999 (64 FR 35713), the Regional Haze Rule (RHR). The RHR revised the existing visibility regulations to integrate into the regulation provisions addressing regional haze impairment and established a comprehensive visibility protection program for Class I areas. The requirements for regional haze, found at 40 CFR 51.308 and 51.309, are included in EPA's visibility protection regulations at 40 CFR 51.300–309. The requirement to submit a regional haze SIP applies to all 50 states, the District of Columbia, and the Virgin Islands. 40 CFR 51.308(b) requires states to submit the first implementation plan addressing regional haze visibility impairment no later than December 17, 2007.

On June 25, 2008, and May 28, 2010, KYDAQ submitted revisions to Kentucky's SIP to address regional haze in the Commonwealth's and other states' Class I areas. On December 16, 2011, EPA published an action proposing a limited approval and a limited disapproval of Kentucky's two SIP revisions to address the first implementation period for regional haze. *See* 76 FR 78194. EPA proposed a limited approval of Kentucky's two SIP revisions to implement the regional haze requirements for Kentucky on the basis that these revisions, as a whole, strengthen the Kentucky SIP. Also in that action, EPA proposed a limited disapproval of these same SIP revisions because of the deficiencies in the Commonwealth's regional haze SIP revisions arising from the remand of CAIR to EPA by the D.C. Circuit. EPA received comments on the Agency's proposed actions for Kentucky's June 25, 2008, and May 28, 2010, SIP revisions. See section II of this rulemaking for a summary of comments received and EPA's responses to these comments. Also, detailed background information and EPA's rationale for the proposed actions are provided in EPA's December 16, 2011, proposed rulemaking.

Following the remand of CAIR, EPA recently issued a new rule in 2011 to address the interstate transport of NO_X and SO_2 in the eastern United States. *See* 76 FR 48208 (August 8, 2011) (''the Transport Rule,'' also known as the Cross-State Air Pollution Rule (CSAPR)). On December 30, 2011, EPA proposed to find that the trading programs in the Transport Rule would achieve greater reasonable progress towards the national goal than would best available retrofit technology (BART) in the states in which the Transport Rule applies. *See* 76 FR 82219. Based on this proposed finding, EPA also proposed to revise the RHR to allow states to substitute participation in the trading programs under the Transport Rule for source-specific BART. EPA has not yet taken final action on that rule.

Also on December 30, 2011, the D.C. Circuit issued an order addressing the status of the Transport Rule and CAIR in response to motions filed by numerous parties seeking a stay of the Transport Rule. In that order, the D.C. Circuit stayed the Transport Rule pending the court's resolutions of the petitions for review of that rule in *EME Homer Generation, L.P.* v. *EPA* (No. 11–1302 and consolidated cases). The court also indicated that EPA is expected to continue to administer CAIR in the interim until the court rules on the petitions for review of the Transport Rule.

II. What is EPA's response to comments received on this action?

EPA received three sets of comments on the December 16, 2011, rulemaking proposing a limited approval and limited disapproval of Kentucky's June 25, 2008, and May 28, 2010, SIP revisions. Specifically, the comments were received from the East Kentucky Power Cooperative (EKPC), the Utility Air Regulatory Group, and collectively from the Sierra Club and National Parks Conservation Association. Full sets of the comments provided by all of the aforementioned entities (hereinafter referred to as ''the Commenter'') are provided in the docket for today's final action. The docket for this action is available at *www.regulations.gov* under Docket Identification No. EPA–R04–OAR–2009–0783. A summary of the comments and EPA's responses are provided below.

Comment 1: The Commenter asserts that EPA does not have the authority under the CAA to issue a limited approval and concurrent limited disapproval of Kentucky's regional haze SIP. The Commenter contends that section 110(k) of the Act only allows EPA to fully approve, partially approve and partially disapprove, conditionally approve, or fully disapprove a SIP.

Response 1: As discussed in the September 7, 1992, EPA memorandum cited in the notice of proposed rulemaking,[1] although section 110(k) of the CAA may not expressly provide authority for limited approvals, the plain language of section 301(a) does provide ''gap-filling'' authority authorizing the Agency to ''prescribe such regulations as are necessary to carry out'' EPA's CAA functions. EPA may rely on section 301(a) in conjunction with the Agency's SIP approval authority in section 110(k)(3) to issue limited approvals where it has determined that a submittal strengthens a given state SIP and that the provisions meeting the applicable requirements of the Act are not separable from the provisions that do not meet the Act's requirements. EPA has adopted the limited approval approach numerous times in SIP actions across the nation over the last twenty years. Limited approval and limited disapproval actions are appropriate here because EPA has determined that Kentucky's SIP revisions addressing regional haze, as a whole, strengthen the Commonwealth's SIP and because the provisions in the SIP revisions are not separable.

The Commenter notes that EPA's action ''directly contradicts the plain language of the Clean Air Act'' and cites several federal appellate court decisions to support its contention that section 110(k) of the Act limits EPA to ''a conditional approval, a partial approval and disapproval, or a full approval.'' However, adopting the Commenter's position would ignore section 301 and violate the '' 'fundamental canon of statutory construction that the words of a statute must be read in their context and with a view to their place in the overall statutory scheme'* * *. A court must therefore interpret the statute 'as a symmetrical and coherent regulatory scheme,'* * * and 'fit, if possible, all parts into an harmonious whole.' '' *FDA* v. *Brown & Williamson Tobacco Corp.,* 529 U.S. 120, 133 (2000) (quoting *Davis* v. *Michigan Dept. of Treasury,* 489 U.S. 803, 809 (1989), *Gustafson* v. *Alloyd Co.,* 513 U.S. 561, 569 (1995), and *FTC* v. *Mandel Brothers, Inc.,* 359 U.S. 385, 389 (1959)). Furthermore, the cases cited by the Commenter did not involve challenges to a limited approval approach, and one of the cases, *Abramowitz* v. *EPA,* 832 F.2d 1071 (9th Cir. 1988) predates the 1990 CAA amendments enacting section 110(k).

Comment 2: The Commenter states that EPA must partially disapprove

[1] *Processing of State Implementation Plan (SIP) Revisions,* EPA Memorandum from John Calcagni, Director, Air Quality Management Division, OAQPS, to Air Division Directors, EPA Regional Offices I–X, September 7, 1992, (''1992 Calcagni Memorandum'') located at *http://www.epa.gov/ttn/caaa/t1/memoranda/siproc.pdf.*

Kentucky's regional haze SIP submittal because it relied on CAIR, a rule that, in the Commenter's words, has been ''declared illegal, remanded and will come to an end.'' The Commenter also contends that EPA must specifically ''disapprove the LTS [long-term strategy] that rely upon emissions reductions predicted to result from CAIR to supplant NO_X and SO_2 BART analyses and determinations for EGUs [electric generating units] and otherwise meet RPGs [reasonably progress goals].''

Response 2: In 2008, the D.C. Circuit remanded CAIR back to the Agency because the court believed that CAIR was inconsistent with the requirements of the CAA. Although CAIR may not remain in effect indefinitely, it is currently in force, and the Commonwealth's reliance on CAIR was fully consistent with EPA's regulations at the time that Kentucky developed its regional haze SIP. As explained in the December 16, 2011, proposed rulemaking (76 FR 78194), EPA is taking a limited approval action because the revisions as a whole strengthen the SIP and because this action is consistent with the court's intention to keep CAIR temporarily in place. The limited approval results in an approval of the entire regional haze submission and all of its elements, preserving the visibility benefits offered by the SIP until CAIR is replaced by the Transport Rule and EPA demonstrates that the Transport Rule is better than BART. EPA is taking a limited disapproval action because the Agency cannot fully approve regional haze SIP revisions that rely on CAIR for emissions reduction measures for the reasons discussed in section IV of the December 16, 2011, proposed rulemaking. EPA's response to Comment 1, above, explains the Agency's authority to take limited approval and limited disapproval actions under the CAA.

EPA disagrees with the Commenter's request for a partial disapproval of the SIP. Because the SIP provisions relying on CAIR, including the LTS, do not meet the applicable regional haze requirements and are not separable from the provisions that meet the applicable requirements of the Act, a partial disapproval would prevent any of the SIP's air quality benefits from being realized until EPA promulgated a FIP or approved a revised SIP to address the deficiencies. Furthermore, the two-year clock to promulgate a FIP to remedy the deficiencies is triggered by the limited disapproval just as it would be triggered by a partial disapproval. On December 30, 2011, EPA proposed to find that the trading programs in the Transport Rule would achieve greater reasonable progress towards the national goal than would BART in the states in which the Transport Rule applies. *See* 76 FR 82219. Based on this proposed finding, EPA also proposed a FIP for Kentucky in that action that would substitute participation in the trading programs under the Transport Rule for participation in CAIR for the purposes of satisfying regional haze requirements and would remedy the CAIR-related deficiencies discussed above.

Comment 3: The Commenter identifies its opposition to EPA's December 30, 2011, proposed rulemaking to find that the Transport Rule is better than BART and to ''use the Transport Rule as an alternative to BART'' for Kentucky and other states subject to the Transport Rule. The Commenter incorporates its comments on that December 30, 2011, rulemaking ''by reference'' and outlines several of those comments, including its arguments that the Transport Rule is not ''better than BART'' and that EPA cannot rely on the Transport Rule as an ''alternative program or measure to displace BART requirements for those BART-eligible sources in Transport Rule states.''

Response 3: In today's rule, EPA is taking final action on the limited approval and limited disapproval of Kentucky's regional haze SIP. The Commenter correctly recognizes that EPA did not propose to find that participation in the Transport Rule is an alternative to BART in this rulemaking. As noted above, EPA made this proposed finding in a separate action on December 30, 2011, and the Commenter is merely reiterating and incorporating its comments on that separate action. These comments are therefore beyond the scope of this rulemaking and will be addressed, as appropriate, by EPA in its final action on the December 30, 2011, proposed rule.

Comment 4: The Commenter believes that the 2018 emissions inventory is not approvable because Kentucky relied on the not-yet-approved Charlotte/Gastonia/Rock Hill 1997 8-hr ozone nonattainment area SIP; consent decrees for EKPC and American Electric Power (AEP) that allow for various compliance options; and the Industrial Boiler Maximum Achievable Control Technology (MACT) rule. The Commenter also believes that it is irrational and arbitrary for EPA to expect that the State will issue case-by-case MACT determinations through title V renewal permits in a timely manner.

Response 4: EPA does not expect that minor inventory differences like those alleged, even if they occur, would affect the adequacy of Kentucky's regional haze SIP. The technical information provided in the record demonstrates that the emissions inventory in the SIP adequately reflects projected 2018 conditions and should be approved. Kentucky's 2018 projections are based on the Commonwealth's technical analysis of the anticipated emissions rates and level of activity for EGUs, other point sources, nonpoint sources, on-road sources, and off-road sources based on their emissions in the 2002 base year, considering growth and additional emissions controls to be in place and federally enforceable by 2018. The emissions inventory used in the regional haze technical analyses was developed by Visibility Improvement State and Tribal Association of the Southeast (VISTAS) with assistance from Kentucky. The 2018 emissions inventory was developed by projecting 2002 emissions (the latest region-wide inventory available at the time the submittal was being developed) and applying reductions expected from federal and state regulations affecting the emissions of VOC and the visibility-impairing pollutants NO_X, particulate matter (PM), and SO_2.

To minimize the differences between the 2018 projected emissions used in the Kentucky regional haze submittal and what actually occurs in 2018, the RHR requires that the five-year review address any expected significant differences due to changed circumstances from the initial 2018 projected emissions, provide updated expectations regarding emissions for the implementation period, and evaluate the impact of these differences on RPGs. It is expected that individual projections within a statewide inventory will vary from actual emissions over a 16-year period. For example, some facilities shut down whereas others expand operations. Furthermore, economic projections and population changes used to estimate growth often differ from actual events; new rules are modified, changing their expected effectiveness; and methodologies to estimate emissions improve, modifying emissions estimates. The five-year review is a mechanism to assure that these expected differences from projected emissions are considered and their impact on the 2018 RPGs is evaluated.

In the specific instances cited by the Commenter, the Commonwealth's analysis of projected emissions meets the requirements of the regional haze regulations and EPA guidance. In the cases of the two NO_X sources in Charlotte (Philip Morris and Norandal), the projected emissions reductions have already occurred or installation of

control equipment is underway and the differences between projected emissions and actual emissions, if there are any, are likely to be too small to affect any of Kentucky's modeling. For the EGUs in Kentucky (EKPC's Spurlock and Cooper plants and AEP's Big Sandy Plant (Big Sandy)), the Commonwealth adjusted the Integrated Planning Model (IPM) projections that VISTAS used for the inventory projections to postpone the NO_X and SO_2 controls that IPM projected for 2009 based on the terms of the consent decrees for EKPC and AEP.

Regarding the changes to the Industrial Boiler MACT rule, VISTAS projected that the emissions reductions resulting from the original, vacated Industrial Boiler MACT rule would be 0.1 to 0.2 percent, depending on the pollutant, of the projected 2018 SO_2, $PM_{2.5}$, and coarse particulate matter (PM_{10}) inventory. EPA has re-promulgated an Industrial Boiler MACT rule that is at least equivalent to the one vacated with regard to the issues raised by the Commenter, and EPA expects that this rule will result in lower emissions from the affected facilities than those originally projected for 2018. Further, as discussed in the December 16, 2011, proposed rulemaking, there are provisions for case-by-case controls should the Industrial Boiler MACT rule not be implemented pursuant to its currently anticipated schedule.

Comment 5: The Commenter contends that EPA must disapprove the Kentucky SIP revisions with regard to the modeling if the ''modified version'' of EPA's Models-3/Community Multiscale Air Quality (CMAQ) model used by the Commonwealth has not been established to be consistent with Appendix W. The Commenter also states that the modeling uses meteorology from 2002 that is out of date and not representative of 2018 or 2064, especially considering climate change. According to the Commenter, EPA must therefore disapprove the modeling, require Kentucky to use recent meteorological data, and require that the modeling consider what impacts climate change will have on future visibility impairment, ozone formation, and other factors that influence visibility impairment such as relative humidity.

Response 5: The modeling used by Kentucky is consistent with Appendix W. EPA's guidance does not require a specific modeling system for evaluating photochemical phenomena. EPA's CMAQ modeling system is one of the photochemical grid models available capable of addressing ozone, PM, visibility, and acid deposition on a regional scale. The photochemical model that VISTAS selected for this study was CMAQ version 4.5. VISTAS modified the module for secondary organic aerosols in an open and transparent manner that was also subjected to outside peer review (see Appendix C of the Kentucky regional haze SIP, located in the docket for this action, for more information on the model selection criteria). The procedures and analyses used in the CMAQ modeling were developed in consultation with the appropriate reviewing authorities and the affected federal land managers (FLMs).

The modeling system based on the CMAQ photochemical model with a modified secondary aerosol module and used in the regional assessment of regional haze was developed and applied consistent with EPA's *Guidance on the Use of Models and Other Analyses for Demonstrating Attainment of Air Quality Goals for Ozone, $PM_{2.5}$, and Regional Haze*, located at *http://www.epa.gov/scram001/guidance/guide/final-03-pmrh-guidance.pdf,* (EPA–454/B–07–002), April 2007, and the EPA document entitled, *Emissions Inventory Guidance for Implementation of Ozone and Particulate Matter National Ambient Air Quality Standards (NAAQS) and Regional Haze Regulations,* located at *http://www.epa.gov/ttnchie1/eidocs/eiguid/index.html,* EPA–454/R–05–001, August 2005, updated November 2005 (''EPA's Modeling Guidance'').

VISTAS developed the technical analyses supporting Kentucky's regional haze SIP in the 2003–2006 time period; therefore, the use of 2002 data is appropriate and consistent with the EPA memorandum authored by Lydia Wegman entitled, *2002 Base Year Emissions Inventory SIP Planning: 8-hr Ozone, $PM_{2.5}$ and Regional Haze Programs,* located at *http://www.epa.gov/ttnchie1/eidocs/2002baseinven_102502new.pdf.* With regard to using meteorology from any chosen year, the issue is whether the chosen year is representative, not whether it is ''out of date.'' VISTAS conducted an in-depth analysis which resulted in the selection of the entire year of 2002 (January 1–December 31) as the best period of meteorology available for conducting the CMAQ modeling for the chosen base year of 2002.

Regarding the comment that the modeling must consider the impacts of climate change, the use of 2002 meteorology without adjustment is more appropriate and more consistent with existing agency guidance. EPA disagrees with the Commenter's position on this issue, a position that the Commenter has raised in prior Kentucky SIP rulemakings. As explained in more detail in those responses, modeling guidance is not yet available for the type of area-specific analysis of effects of climate change required for SIP planning. It is therefore premature to require a precise mathematical accounting in the SIP process for the effect of higher ambient temperatures due to climate change. The use of unadjusted meteorological input is consistent with how photochemical modeling demonstrations are developed for regulatory analyses. The 2002 meteorological data is used to support the base and future year modeling. The rationale for its use in the base year is to test the model's performance in reproducing observed temporal and concentration spatial patterns. It is also used in the future year modeling for 2018 to test how control strategy is sufficient address the conditions observed in the base year of 2002. The 2064 year is not included or addressed in the regional haze SIP in this round of submittals.

Comment 6a: The Commenter states that Kentucky excluded the auxiliary boiler at Big Sandy from a BART analysis because it only operated for short periods of time during startup and emissions tests. According to the Commenter, EPA cites no authority for this proposition, mentions no enforceable conditions that limit Big Sandy's auxiliary boiler operations, and thus, EPA must disapprove the SIP for failure to have a BART analysis for Big Sandy's auxiliary boiler.

Response 6a: Kentucky addressed the exclusion of this auxiliary unit in an approved modeling protocol. Tables B1 through B4 in Appendix L.5 of Kentucky's June 25, 2008, regional haze SIP revision present the operating data for the auxiliary boiler at Big Sandy for the period June 22, 2003, through September 24, 2006. During this time, the boiler had an average annual operating factor of 1.16 percent based on the facility's actual operating hours with a range of 0.3 percent in 2005 to 2.68 percent for January to September 2006. With the exception of September 2003, when the boiler was operated for NO_X SIP Call Low Mass Emitter certification testing and related operations checks (this testing is required every five years), and during October 2004, when the boiler was operated periodically over a three-day period while both generating units were out of service, the normal operating pattern of the boiler is for it to only be fired at low load periodically for a few minutes to test its ability to be started and for use in starting up Unit 2. EPA agrees with Kentucky that this

data justifies not considering this boiler in the BART analysis.

Comment 6b: The Commenter contends that the BART analysis for Big Sandy units 1 and 2 fails to consider: Wet electrostatic precipitators (ESPs); switching to a lower sulfur coal either entirely or as a blend or co-firing natural gas or biomass; a circulating fluid bed (CFB) scrubber; a spray dry absorption (SDA) scrubber; installing a fabric filter (FF); upgrading the current ESPs to increase the size and/or change from wire to rigid discharge electrode; changing the operation of the air preheater; or trona injection coupled with replacing the ESP with a new ESP. Because the BART analysis allegedly failed to consider all available retrofit technologies, the Commenter states that EPA must disapprove the SIP with regard to the PM BART determination for Big Sandy. The Commenter also believes that EPA must disapprove the SIP because it does not contain a ''firm'' closure date for unit 1; an enforceable deadline for the installation of the flue gas desulfurization (FGD) on unit 2 and the ammonia injection on unit 1; and an emissions limit for condensable PM from both units.

Response 6b: As stated in Appendix Y of 40 CFR part 51, available retrofit control options are those air pollution control technologies with a practical potential for application to the emissions unit and the regulated pollutant under evaluation. In identifying ''all'' options, a state must identify the most stringent option and a reasonable set of options for analysis that reflects a comprehensive list of available technologies. It is not necessary to list all permutations of available control levels that exist for a given technology; the list is complete if it includes the maximum level of control that each technology is capable of achieving. Furthermore, EPA does not consider BART as a requirement to redesign the source when considering available control alternatives. For example, where the source subject to BART is a coal-fired EGU, EPA does not require the BART analysis to consider building a natural gas-fired electric turbine although the turbine may be inherently less polluting on a per unit basis.

AEP performed a full BART analysis for particulates, with its primary focus on the condensable fraction due to the minimal impact from the primary particulates since both units are currently equipped with ESPs for primary particulate control. AEP evaluated five combinations of condensable particulate control options for the two units. For unit 1, AEP only considered injecting ammonia or injecting trona, a mineral composed primarily of sodium and carbonate, for the reduction of inorganic condensables. For unit 2, AEP considered injecting ammonia, injecting trona, or installing a wet FGD system.

In addition, AEP determined that the options involving injecting trona on either unit at Big Sandy were technically infeasible. Based on the experience of AEP at units where sorbents are injected for the reduction of inorganic condensables, the presently installed ESPs at both Big Sandy units are unsuitable for trona injection.

For Big Sandy units 1 and 2, the company agreed to install ammonia injection controls on unit 1 and a FGD on unit 2. KYDAQ reviewed the source's BART modeling determination and available data. Considering the statutory factors, Kentucky determined that the controls proposed by AEP are reasonable and appropriate for addressing condensable particulates and their impacts on nearby Class I areas. EPA agrees with Kentucky's analyses and conclusions. EPA has reviewed the Commonwealth's analyses and concluded that they were conducted in a manner that is consistent with EPA's BART Guidelines and EPA's *Air Pollution Control Cost Manual* (*http://www.epa.gov/ttncatc1/products.html#cccinfo*).

Regarding AEP's decision not to evaluate installation of a wet FGD on unit 1 because of its age, EPA would generally not rely on an assertion that a unit would shut down without a legally enforceable condition requiring shutdown of the unit at issue. Kentucky has determined that BART for unit 1 is ammonia injection. As noted in EPA's December 16, 2011, proposed rulemaking, on June 9, 2011, AEP announced that Big Sandy unit 1 would be retired by December 31, 2014, and unit 2 would be rebuilt as a natural gas-fired plant by December 31, 2015. Since that announcement, AEP modified its plans to convert unit 2 from coal to gas power. It now plans to construct a dry FGD or ''scrubber'' system on unit 2, the plant's 800-megawatt electricity generation unit. However, AEP still plans to shut down unit 1 (the older of the two; rated at 278 megawatts) and to retire it at the end of 2014. On December 5, 2011, the company made a formal filing of an Application for a Certificate of Public Convenience and Necessity before the Kentucky Public Service Commission, which must approve the project and investment. As the company continues the required proceedings for closure of unit 1, requiring additional analysis would not likely change the conclusions of the BART analysis. In any case, if the decision to close unit 1 should be reversed, the requirements for an ammonia scrubber remain in place.

Comment 6c: According to the Commenter, EPA should clarify whether the 99 percent removal efficiency for the existing ESP at the E.ON U.S. Mill Creek Station (Mill Creek) is for filterable or condensable PM. If it is filterable, the Commenter believes that it is arbitrary to base a BART analysis on the current removable rate for filterable PM when the BART analysis is supposed to address condensable PM. The Commenter also states that the BART analysis rejects pulse jet fabric filter (PJFF) and wet ESP based solely on the incremental cost and admits that the average cost effectiveness for sorbent injection on all four units is about the same. ''Apparently, the BART analysis rejects sorbent injection on units 1 and 2 because it would cost more to install pollution controls on all four units than on just two units. * * * [t]his is not a rationale basis for rejecting sorbent injection in units 1 and 2.'' The Commenter further contends that EPA must disapprove Kentucky's regional haze SIP with regard to the PM BART analysis for Mill Creek since the analysis fails to consider: Switching to a lower sulfur coal either entirely or as a blend or co-firing natural gas or biomass; CFB scrubbers; SDA scrubbers; upgrading existing scrubbers; upgrading the current ESPs to increase the size and/or change from wire to rigid discharge electrode; or changing the operation of the air preheater.

Response 6c: The existing ESP removal efficiency referred to by the Commenter is for filterable particulates. These filterable emissions, which are 99 percent controlled, are a substantial portion of the facility's potential PM emissions and maintaining these limits for regional haze is appropriate. For the two units where additional PM controls are being adopted for BART, the Commonwealth has adopted additional emissions limits to handle condensable PM (primarily in the form of SO_3/H_2SO_4), to address those emissions not controlled by the filterable emissions limit. As documented in Kentucky's May 28, 2010, revision to its regional haze SIP, the title V permitted BART emissions limits for Mill Creek Units 3 and 4 are 64.3 pounds per hour (lb/hr) and 76.5 lb/hr, respectively, for sulfuric acid mist (H_2SO_4). These are new BART limits for the two units for which controls on condensable particulates are being installed.

Regarding the technologies considered in the BART analysis for Mill Creek, as stated in Appendix Y of

40 CFR part 51, available retrofit control options are those air pollution control technologies with a practical potential for application to the emissions unit and the regulated pollutant under evaluation. In identifying ''all'' options, a state must identify the most stringent option and a reasonable set of options for analysis that reflects a comprehensive list of available technologies. It is not necessary to list all permutations of available control levels that exist for a given technology; the list is complete if it includes the maximum level of control that each technology is capable of achieving. Furthermore, EPA does not consider BART as a requirement to redesign the source when considering available control alternatives. For example, where the source subject to BART is a coal-fired EGU, EPA does not require the BART analysis to consider building a natural gas-fired electric turbine although the turbine may be inherently less polluting on a per unit basis. Similarly, EPA does not interpret the CAA or the RHR as requiring states to consider limiting the type of coal burned as a BART control technology.

For the Mill Creek BART analysis, the Commonwealth concluded that the technically feasible technologies for evaluation in accordance with Step 2 of the BART analysis included the existing cold-side ESP and PJFF for PM, and sorbent injection and a wet ESP for sulfates. From this list of technically feasible control technologies, the existing cold-side ESP is already in place at all four units at Mill Creek. Therefore, only the three additional control technologies were subjected to the remaining engineering analysis process to determine BART technologies for visibility modeling. The existing cold-side ESPs at all four units at Mill Creek are already demonstrating high PM removal efficiencies of 99 percent, and all four units are already equipped with wet FGD systems for SO_2 removal, limiting the additional available options for sulfite (SO_3) condensable particulate control. The incremental cost effectiveness of PJFF and a wet ESP ranged from $20,380 to $52,190 per ton of PM reduced, and these options were not considered further. Sorbent injection was more cost effective, ranging from $4,293 to $5,017 per ton of PM reduced.

As discussed in the December 16, 2011, proposed rulemaking, Kentucky determined that BART for Mill Creek is the installation of sorbent injection controls on the larger units 3 and 4. Kentucky did not require BART controls on units 1 and 2 because controls on these units would nearly double the cost (an additional $8.8 million beyond the $10.5 million for controls on units 3 and 4) for a visibility improvement of 0.36 deciview (compared with a 0.83 deciview improvement from controlling units 3 and 4). The Commonwealth therefore concluded that controls on units 1 and 2 were not as cost effective.

As is noted in the BART guidelines, the Commonwealth has discretion in assigning the proper weight and significance to each of the five statutory factors that it must consider in making a BART determination. EPA has reviewed the Commonwealth's analyses and concluded they were conducted in a manner that is consistent with EPA's BART Guidelines and EPA's *Air Pollution Control Cost Manual* (*http://www.epa.gov/ttncatc1/products.html#cccinfo*). Therefore, Kentucky's determination reflects a reasonable application of EPA's guidance to these sources.

Comment 6d: The Commenter contends that EPA must disapprove the BART determinations for EKPC's Spurlock and Cooper Stations since the BART analysis provides no limit on condensable PM and fails to consider switching to a lower sulfur coal either entirely or as a blend; co-firing natural gas or biomass; or changing the operation of the air preheater.

Response 6d: Regarding the technologies considered in the BART analyses for Spurlock and Cooper, as stated in Appendix Y of 40 CFR part 51, available retrofit control options are those air pollution control technologies with a practical potential for application to the emissions unit and the regulated pollutant under evaluation. In identifying ''all'' options, a state must identify the most stringent option and a reasonable set of options for analysis that reflects a comprehensive list of available technologies. It is not necessary to list all permutations of available control levels that exist for a given technology; the list is complete if it includes the maximum level of control each technology is capable of achieving. Furthermore, EPA does not consider BART as a requirement to redesign the source when considering available control alternatives. For example, where the source subject to BART is a coal-fired EGU, EPA does not require the BART analysis to consider building a natural gas-fired electric turbine although the turbine may be inherently less polluting on a per unit basis.

EKPC evaluated three options and agreed to install the top ranking option of wet FGD for SO_2 control and wet ESP for PM control for both Spurlock and Cooper. These controls are consistent with those in a consent decree that EKPC entered into with EPA that will address condensable particulate emissions and other visibility impairing pollutants. Kentucky subsequently modified this BART determination in its May 28, 2010, regional haze SIP revision with a comparably effective option at Cooper Units 1 and 2 of dry FGD and FF emissions controls for the wet FGD and wet ESP controls. EPA believes that Kentucky has appropriately addressed BART for this facility.

Comment 6e: For the Tennessee Valley Authority's (TVA's) Paradise Fossil Plant (TVA Paradise), the Commenter contends that the BART analysis fails to consider switching to a lower sulfur coal (either entirely or as a blend); co-firing natural gas or biomass; a wet FGD; a dry CFB scrubber; a SDA scrubber; or changing the operation of the air preheater. For these reasons, the Commenter believes that EPA must disapprove this BART determination.

Response 6e: Regarding the technologies considered in the BART analysis for TVA Paradise, as stated in Appendix Y of 40 CFR part 51, available retrofit control options are those air pollution control technologies with a practical potential for application to the emissions unit and the regulated pollutant under evaluation. In identifying ''all'' options, a state must identify the most stringent option and a reasonable set of options for analysis that reflects a comprehensive list of available technologies. It is not necessary to list all permutations of available control levels that exist for a given technology; the list is complete if it includes the maximum level of control that each technology is capable of achieving. Furthermore, EPA does not consider BART as a requirement to redesign the source when considering available control alternatives. For example, where the source subject to BART is a coal-fired EGU, EPA does not require the BART analysis to consider building a natural gas-fired electric turbine although the turbine may be inherently less polluting on a per unit basis.

All three units at TVA Paradise are already equipped with FGD systems. These systems are in the process of being upgraded, and TVA believes that the work should be completed by December 31, 2012. The BART analysis focused on control of condensable PM (primarily in the form of SO_3/H_2SO_4). TVA concluded that neither of the two control options evaluated (wet ESP and hydrated lime injection) were cost effective, and the Commonwealth concurred. However, as discussed in the December 16, 2011, proposed

rulemaking, TVA plans to install hydrated lime injection controls on TVA Paradise units 1–3 to mitigate opacity due to SO_3 emissions, and these controls are required to be in place pursuant to the December 15, 2009, title V permit for the facility. EPA therefore believes that Kentucky has appropriately addressed BART for this facility.

Comment 6f: The Commenter makes several statements regarding PM BART emissions limits. First, the Commenter believes that emissions limits at all ''subject to BART'' units must have an averaging time, testing, and monitoring for condensable PM that assures compliance with the condensable PM limits at all times, including during startup, shutdown, and malfunction. Second, the Commenter asserts that all emissions limits contained in consent decrees must be added to the SIP because consent decrees can be modified without public participation and are eventually terminated. Third, the Commenter explains that, in its opinion, PM BART emissions limits must be effective as soon as practical, and that EPA must determine when this is. The Commenter goes on to state that EPA ''cannot just say it has to be effective as soon as practical'' since this is ''too vague to be enforceable.'' For units using existing pollution controls, ''the emissions limits should be effective on the date of publication of the final rule. For other units, EPA should determine what is the quickest time the new equipment can be installed and fully operational.'' For these reasons, the Commenter claims that EPA must disapprove the SIP submittal.

Response 6f: The adopted BART emissions limits all have testing and monitoring requirements that will be included in the respective title V operating permit. The consent decrees stipulate these requirements and explicitly address how startup, shutdown, and malfunctions are to be considered. These agreements also require that the consent decrees remain in force until the title V permit is issued. Since these limits have been formally adopted by Kentucky in its regional haze SIP, these requirements will become federally enforceable once EPA approves the SIP revisions. The title V permit, which documents all enforceable provisions, will also be updated at the appropriate time. All BART emissions limits are contained in the SIP, including the limits that also appear in consent decrees, and therefore meet the requirement that the limits be federally enforceable. Regarding BART effective dates, 40 CFR 51.308(e)(1)(iv) states that ''* * * each source subject to BART be required to install and operate BART as expeditiously as practicable, but in no event later than 5 years after approval of the implementation plan revision,'' and Kentucky adopted requirements consistent with this regulation.

Comment 7: The Commenter suggests that EPA should ''issue a new proposal and hold a new public comment period'' because the ''Federal Register notice of EPA's proposed rule does not include the actual language which EPA is proposing to include in the Kentucky SIP.''

Response 7: EPA disagrees with the Commenter's position on the content of EPA's December 16, 2011, proposed rulemaking, a position that the Commenter has raised in several prior SIP rulemakings. Neither the CAA nor the Administrative Procedure Act mandates that the proposed and final **Federal Register** rulemaking actions include the complete text of the proposed SIP revision. The December 16, 2011, proposed rulemaking satisfies the notice requirements by providing citations to the rules at issue, offering the SIP revisions for public review, and describing the subjects and issues involved in the SIP revisions. Publication in the **Federal Register** is costly and resource intensive, and EPA makes every effort to provide key information in proposal notices while at the same time using Agency resources efficiently. EPA drafts rulemaking notices to enable public understanding of the subjects and issues at hand. EPA included the complete text of the SIP revisions in the docket at the time that it issued the proposed rule and it remains available for public view. The docket for this action is available at *www.regulations.gov* under Docket Identification No. EPA–R04–OAR–2009–0783. In addition, the public may also contact the listed contacts for any further information or questions.

Comment 8: The Commenter contends that Kentucky's regional haze SIP must require revisions to address Reasonably Attributable Visibility Impairment (RAVI) within three years of a FLM certifying visibility impairment and that the Commonwealth's commitment to address RAVI should a FLM certify visibility impairment is not enough. The Commenter also contends that the SIP must require Kentucky to submit a report to EPA on progress towards the RPGs and that the Commonwealth's commitment to do so is not sufficient.

Response 8: The SIP revisions do not address RAVI requirements since this was the subject of previous rulemakings (see the response to Comment 11). EPA's visibility regulations direct states to coordinate their RAVI LTS provisions with those for regional haze and the RAVI portion of a SIP must address any integral vistas identified by the FLMs. However, as stated in the December 16, 2011, proposed rulemaking, the FLMs have not identified any integral vistas in Kentucky, the Class I area in Kentucky is not experiencing RAVI, and no Kentucky sources are affected by the RAVI provisions. Thus, the June 25, 2008, Kentucky regional haze SIP revisions did not explicitly address the coordination of the regional haze with the RAVI LTS although Kentucky made a commitment to address RAVI should the FLM certify visibility impairment from an individual source. EPA finds that Kentucky's regional haze SIP appropriately supplements and augments the Commonwealth's RAVI visibility provisions to address regional haze by updating the LTS provisions as Kentucky has done.

Regarding reports on progress toward RPGs, 40 CFR 51.308(g) requires states to ''submit a report to [EPA] every 5 years evaluating progress towards the reasonable progress goal for each mandatory Class I Federal area located within the State and in each mandatory Class I Federal area located outside the State which may be affected by emissions from within the State.'' It is unnecessary for a state rule to make this enforceable since it is part of EPA's regional haze regulations (*i.e.,* an enforceable requirement). The progress reports must be in the form of a SIP revision and are therefore subject to the requirements for SIP revisions in the CAA and to EPA's review and approval. The commitments in Kentucky's SIP are consistent with the regulatory requirements for this provision.

Comment 9a: The Commenter claims that Kentucky's regional haze SIP does not explain how monitoring data and other information is used to determine the contribution of emissions from within the Commonwealth to regional haze visibility impairment at Class I areas within and outside Kentucky. Therefore, the Commenter believes that EPA must disapprove Kentucky's regional haze SIP.

Comment 9b: The Commenter states that the SIP must clearly state the method by which the Commonwealth intends to report visibility modeling to the EPA. Additionally, the Commenter states that if Kentucky plans to rely on the referenced Visibility Information Exchange Web System (VIEWS) Web site for reporting, the SIP must clearly state, not imply, that Kentucky intends to use the Web site as its way of reporting visibility monitoring data. ''If

Kentucky intends to use another method of reporting visibility, the proposal need to explain this. If Kentucky intends to use this web site, it is not sufficient that Kentucky is 'encouraging' VISTAS to maintain this web site.'' The Commenter also states that the Kentucky SIP needs to have an enforceable mechanism to transmit the Interagency Monitoring of Protected Visual Environments (IMPROVE) data to EPA as well as an enforceable mechanism to ensure that the IMPROVE data is continually gathered. The ''SIP must include an enforceable requirement that the data is gathered by Kentucky unless it is gathered by other entities such as VISTAS and the National Park Service.'' The Commenter concludes by stating that ''EPA must disapprove the SIP submittal in this regard because such an enforceable requirement is missing.''

Response 9a, 9b: The primary monitoring network for regional haze in Kentucky is the IMPROVE network. There is currently one IMPROVE site in the Commonwealth, which serves as the monitoring site for Mammoth Cave National Park in Kentucky. IMPROVE monitoring data from 2000–2004 serves as the baseline for the regional haze program, and is relied upon in the Kentucky regional haze submittal. Monitoring data is different from emissions data or analyses conducted to attribute contribution. These analyses are part of the ten-year planning period updates conducted by the states.

In its SIP revisions, Kentucky states its intention to rely on the IMPROVE network for complying with the regional haze monitoring requirement in EPA's RHR for the current and future regional haze implementation periods. Data produced by the IMPROVE monitoring network will be used nearly continuously for preparing the five-year progress reports and the 10-year SIP revisions, each of which relies on analysis of the preceding five years of data. The VIEWS Web site has been maintained by VISTAS and the other regional planning organizations (RPOs) to provide ready access to the IMPROVE data and data analysis tools. Kentucky is encouraging VISTAS and the other RPOs to maintain the VIEWS or a similar data management system to facilitate analysis of the IMPROVE data. Kentucky cannot legally bind federal and state legislatures to continue to fund the monitoring program for regional haze. Kentucky's SIP adequately addresses this provision and explains how monitoring data and other information has been and will be used to determine the contribution of emissions from within the Commonwealth to regional haze visibility impairment at Class I areas.

Comment 9c: According to the Commenter, there is no indication that Kentucky developed an emissions inventory for the most recent year for which data are available (2008, 2009 or 2010), and EPA must disapprove the SIP on this point. The Commenter also states that there are no requirements for reporting, recordkeeping, and other measures necessary to assess and report on visibility, and therefore, EPA must also disapprove on this point.

Response 9c: There are no requirements relating to reporting and recordkeeping of emissions to assess and report on visibility other than those that relate to the submittal the five-year review. The analyses performed in support of Kentucky's SIP revisions were conducted in the 2003–2006 time period. EPA therefore finds the use of the 2002 emissions inventory to be appropriate. The necessary data to assess the SIP submission are contained in the appendices to the Commonwealth's 2008 regional haze submittal. For the more voluminous data such as modeling files, please see Appendix I of the 2008 SIP submittal for data access instructions. The next inventory submittal will be part of the five-year review, and VISTAS has been working with its states to develop a comprehensive baseline inventory (expected to be for 2007 and updated with appropriate additional later information) which will be part of the five-year submittal. The record demonstrates that Kentucky's SIP adequately addresses the emissions inventory requirement.

Comment 10: The Commenter states that Kentucky did not adequately respond to requests from Maine, Vermont, New Jersey, and New Hampshire for a 28 percent reduction in SO_2 emissions from non-EGU sources and a 90 percent reduction in SO_2 emissions from 14 Kentucky EGUs. With regard to the EGUs, the Commenter further explains that Kentucky's assertion that 93 percent of these 14 EGUs have or will have SO_2 controls by 2015 or earlier is flawed because having SO_2 controls on EGUs does not necessarily mean that those EGUs will achieve a 90 percent reduction in SO_2 emissions. The Commenter also asserts that Kentucky did not establish that having SO_2 controls on these EGUs will address Kentucky's apportioned emissions reductions under 40 CFR 51.308(d)(3)(ii)–(iii) for the Class I areas in Maine, Vermont, New Jersey, and New Hampshire. For these reasons, the Commenter believes that EPA must disapprove Kentucky's SIP with regard to its obligations under 40 CFR 51.308(d)(3) to address visibility impacts in these states.

Response 10: The letters sent in 2007 from Maine, Vermont, New Jersey, and New Hampshire, (states in the Mid-Atlantic/Northeast Visibility Union (MANE–VU) RPO), invite Kentucky to participate in future consultation meetings because visibility impacts from Kentucky's sources exceeded one of the minimum thresholds used by MANE–VU to identify sources with potential visibility impacts at one or more of the Class I areas in the MANE–VU region. These thresholds for reasonable control consideration were used to identify states to invite to the first set of inter-RPO consultation meetings. The states' letters cite to the report entitled, *Contributions to Regional Haze in the Northeast and Mid-Atlantic United States,* NESCAUM, August 2006, *http://www.nescaum.org/documents/contributions-to-regional-haze-in-the-northeast-and-mid-atlantic--united-states.* In accordance with 40 CFR 51.308(d)(i), Kentucky participated in consultation calls and meetings in 2007 as requested, and in the Commonwealth's final SIP submittal dated June 25, 2008, Kentucky provided its final response regarding the MANE–VU requests. Kentucky received no adverse comments from any of the MANE–VU states during the public comment period on its proposed regional haze SIP, nor did the Commonwealth receive any additional correspondence from these states once Kentucky submitted its final SIP to EPA.

Kentucky's position is that the significant existing and expected EGU emissions controls more than adequately respond to the EGU and non-EGU requests from the MANE–VU RPO. Kentucky provided supporting information to address its apportionment of emissions reductions in Appendix H of its SIP; and in Appendix H.4, the Commonwealth documents the existing and planned controls for the Commonwealth's EGUs, including those EGUs identified by MANE–VU. These EGU SO_2 controls reflect what is predicted or has occurred to address CAIR requirements. Kentucky demonstrated in its SIP that no additional SO_2 controls beyond CAIR are reasonable for reasonable progress for the first implementation period. Kentucky states in its SIP that it plans to assess the EGU controls predicted under CAIR with what is actually occurring at these sources for the first periodic report due five years after initial submittal of the first regional haze SIP (*i.e.,* June 2013).

As explained in EPA's December 16, 2011, proposed rulemaking, prior to the CAIR remand by the D.C. Circuit, EPA believed the Commonwealth's demonstration that no additional controls beyond CAIR are reasonable for SO_2 for affected Kentucky EGUs for the first implementation period to be acceptable. However, the Commonwealth's demonstration regarding CAIR and reasonable progress for EGUs, and other provisions in the Kentucky regional haze SIP, are based on CAIR, and thus, the Agency is issuing a limited approval of the Kentucky regional haze SIP revisions.

Regarding non-EGU SO_2 emissions, the Commonwealth established a threshold to determine which emissions units would be evaluated for reasonable progress controls, and found no additional SO_2 controls for these sources are reasonable for the first implementation period. EPA believes that Kentucky has adequately addressed its apportionment of emissions reductions determined through the VISTAS process, and shared via consultation with the other RPOs, in accordance with 40 CFR 51.308(d)(3).

Comment 11: The Commenter states that there is no evidence that Kentucky's regional haze SIP revisions comply with the requirement in 40 CFR 51.306(d) that the LTS provides for review of the impacts from any new major stationary source or major modifications on visibility in any mandatory Class I area in accordance with 40 CFR 51.307, 51.166, 51.160 and any binding guidance insofar as these provisions pertain to protection of visibility. The Commenter also contends that EPA must therefore disapprove Kentucky's SIP revisions in part with regard to 40 CFR 51.306(d) and the provisions cited therein.

Response 11: The Kentucky regional haze SIP revisions subject to this rulemaking address the regional haze requirements of 40 CFR 51.308 whereas the regulation cited by the Commenter, 40 CFR 51.306(d), is specific to the LTS requirements for RAVI. Furthermore, as identified in footnote 18 [2] of EPA's December 16, 2011, proposed rulemaking, Kentucky has already addressed the new source review requirements for visibility (40 CFR 51.307) and RAVI LTS (40 CFR 51.306) in its SIP and EPA has fully approved these provisions.

Comment 12: The Commenter contends that EKPC agreed to install wet FGDs and wet ESPs at Spurlock and Cooper Stations pursuant to a BART analysis, and not pursuant to EKPC's July 2, 2007, consent decree with the United States (*United States* v. *EKPC,* 04–34–KSF (E.D. Ky)). The Commenter requests that EPA ''clarify the language in the Proposed Rule'' accordingly.

Response 12: The consent decree was a separate action from the BART determination, and EPA did not intend to imply that the consent decree was entered into to address regional haze. Kentucky structured its SIP to meet the BART requirements, recognizing the existence of similar requirements in the consent decrees. EPA relied on the following language found in the Kentucky regional haze SIP revision (see the May 28, 2010, revised Kentucky regional haze SIP revision, Table 7.5.3–1):

'' * * * *EKPC per a consent decree and for BART will install a wet FGD and wet ESP at EKPC Spurlock Units 1 and 2 that will address condensable particulate emissions and other visibility impairing pollutants'',* and

'' * * * *EKPC per a consent decree and for BART will install a dry FGD and fabric filtration at EKPC Cooper Units 1 and 2 that will address condensable particulate emissions and other visibility impairing pollutants.''*

Comment 13: According to the Commenter, EPA's December 16, 2011, proposed rulemaking incorrectly states that the EKPC consent decree provides for a filterable PM emissions rate of 0.03 pound per million British Thermal Unit (lb/MMBtu), and therefore, EPA should delete any reference indicating that the consent decree provides for this 0.03 lb/MMBtu rate for any EKPC unit and any references to this emissions rate.

Response 13: EPA reviewed the consent decree and the SIP language again in response to this comment. EPA concludes that the Commenter is correct that the consent decree provided other alternatives to developing a filterable particulate limit. However, Kentucky's regional haze SIP is explicit in several instances that EKPC identified, and the Commonwealth accepted, the 0.03 lb/MMBtu limit as BART. EPA points the Commenter to the following statements in Kentucky's regional haze SIP revisions:

''* * * *A 07/02/07 EKPC consent decree provides a filterable PM emission rate of 0.030 lb/MMBtu, which was utilized to demonstrate modeled visibility improvement. Emission limits and controls will be included in the source's Title V Permit as appropriate or on renewal.''* (May 28, 2010, revised SIP revision, Table 7.5.3–2).

'' * * * *application of WFGD/ESP controls to Spurlock Units 1 and 2 and Cooper Units 1 and 2, with a filterable PM limit of 0.03 lb/MMBtu, mitigates any adverse visibility impacts in Class I areas within 300 km of each source. In accordance with the draft EPA consent decree, EKPC will apply these controls * * *.''* (Appendix L.11, p.17 (EKPC BART determination submittal, included as part of the Kentucky SIP revision)).

''*In the 2007 BART Submittal, EKPC determined that a WFGD/WESP control train capable of achieving 0.030 lb/mmBtu filterable PM and 0.052lb/mmBtu total PM was BART for Cooper Units 1 and 2. EKPC is requesting that it be allowed to substitute a DFGD/FF control train capable of achieving 0.030 lb/mmBtu filterable PM and 0.045 lb/mmBtu total PM for the WFGD/WESP control train previously approved * * *''* (Appendix L.11, p. 197 (March 18, 2009 submittal from EKPC to KYDAQ)).

''* * * *Therefore, application of DFG/DIFF controls to Cooper Units 1 and 2, with a filterable PM limit of 0.030 lb/mmBtu, mitigates any adverse visibility impact in Class I areas within 300 km of each source and fulfills the BART requirements * * *''* Appendix L.11, p. 200.

Accordingly, EPA considers the 0.03 lb/MMBtu filterable PM emissions limit to be an appropriately adopted and enforceable SIP limit and part of the BART determination for EKPC Cooper Units 1 and 2 and Spurlock Units 1 and 2.

Comment 14: The Commenter contends that EPA should fully approve Kentucky's regional haze SIP revisions because they are consistent with EPA's regional haze rules. In support of its position, the Commenter states that the regulations allowing states to rely on CAIR to satisfy BART are still legally valid and effective, and therefore, Kentucky can continue to rely on CAIR. The Commenter also believes that EPA should fully approve Kentucky's regional haze SIP in response to the D.C. Circuit's order staying the implementation of the Transport Rule pending resolution of the legal challenges to the Rule.

Response 14: EPA has the authority to issue a limited approval (see response to Comment 1) and it is appropriate and necessary to promulgate a limited approval and limited disapproval of Kentucky's regional haze SIP revisions

[2] The Kentucky visibility SIP revisions to address Prevention of Significant Deterioration (PSD) provisions were submitted to EPA on February 20, 1986, and approved by EPA September 1, 1989 (54 FR 36311). The Commonwealth's visibility plan provisions were submitted on August 31, 1987, and approved July 12, 1988 (53 FR 26256). The nonattainment NSR provisions were submitted July 14, 2004, and approved July 11, 2006 (71 FR 38990).

at this time (see response to Comment 2). This action results in an approval of the entire regional haze SIP and all of its elements, preserving the visibility benefits offered by the SIP while providing EPA with the opportunity to demonstrate that the Transport Rule is better than BART. As noted above, EPA has already published a proposed rule reflecting this demonstration. EPA cannot fully approve regional haze SIP revisions that rely on CAIR for emissions reduction measures for the reasons discussed in section IV of the December 16, 2011, proposed rulemaking, and therefore proposed to grant limited approval and limited disapproval of the Kentucky regional haze SIP revisions. The D.C. Circuit's order staying the Transport Rule has no effect on the court's 2008 ruling in *North Carolina* v. *EPA,* 550 F.3d 1176 (D.C. Cir. 2008). Therefore, the proposed limited approval and limited disapproval actions remain appropriate for the reasons discussed in section IV of the December 16, 2011 proposed rulemaking cited above.

Comment 15: The Commenter states that ''EPA should promulgate regulations that will avoid any asserted need to propose or promulgate limited disapprovals of regional haze SIPs or to propose or promulgate regional haze FIPs for states that have relied on CAIR or that may rely on CSAPR, or both, as a BART alternative for NO_X and SO_2 emissions from EGUs.'' The Commenter believes that EPA should promulgate regulations that would provide expressly that a state that becomes subject to CSAPR may choose to adopt a ''CSAPR=BART policy that would apply at such time as CSAPR takes effect.'' The Commenter also states that the ''visibility-improvement benefits from CAIR's emissions reductions * * * are likely to be replicated, or indeed exceeded, by the visibility benefits projected to result from CSAPR if CSAPR takes effect in the future.''

Response 15: As noted in the response to Comment 3, this action is focused solely on the limited approval and limited disapproval of Kentucky's regional haze SIP revisions submitted on June 25, 2008, and May 28, 2010. Given that the Transport Rule, or CSAPR, was not signed until 2011, neither SIP revision mentions the Transport Rule nor suggests that the Commonwealth intended to rely on the reductions from this rule to meet the regional haze requirements. EPA did not propose to find that participation in the Transport Rule is an alternative to BART in this rulemaking. EPA made this proposed finding in a separate action on December 30, 2011; therefore, these comments are beyond the scope of this rulemaking and will be addressed by EPA in its final action on the December 30, 2011, proposed rule.

III. What is the effect of this final action?

Under CAA sections 301(a) and 110(k)(6) and EPA's long-standing guidance, a limited approval results in approval of the entire SIP revision, even of those parts that are deficient and prevent EPA from granting a full approval of the SIP revision (see EPA's 1992 Calcagni Memorandum). Today, EPA is finalizing a limited approval of Kentucky's June 25, 2008, and May 28, 2010, regional haze SIP revisions. This limited approval results in approval of Kentucky's entire regional haze SIP and all the elements. EPA is taking this approach because Kentucky's SIP will be stronger and more protective of the environment with the implementation of those measures by the Commonwealth and having federal approval and enforceability than it would without those measures being included in Kentucky's SIP.

In this action, EPA is also finalizing a limited disapproval of Kentucky's June 25, 2008, and May 28, 2010, regional haze SIP revisions insofar as these SIP revisions rely on CAIR to address the impact of emissions from the Commonwealth's EGUs. As explained in the 1992 Calcagni Memorandum, ''[t]hrough a limited approval, EPA [will] concurrently, or within a reasonable period of time thereafter, disapprove the rule * * * for not meeting all of the applicable requirements of the Act. * * * [T]he limited disapproval is a rulemaking action, and it is subject to notice and comment.'' Final limited disapproval of a SIP submittal does not affect the federal enforceability of the measures in the subject SIP revision nor prevent state implementation of these measures. The legal effect of the final limited disapproval for Kentucky's June 25, 2008, and May 28, 2010, SIP revisions is to provide EPA the authority to issue a FIP at any time, and to obligate the Agency to take such action no more than two years after the effective date of EPA's final action. As explained in the 1992 Calcagni Memorandum, ''[t]hrough a limited approval, EPA [will] concurrently, or within a reasonable period of time thereafter, disapprove the rule * * * for not meeting all of the applicable requirements of the Act. * * * [T]he limited disapproval is a rulemaking action, and it is subject to notice and comment.''

IV. Final Action

EPA is finalizing a limited approval and a limited disapproval of two revisions to the Kentucky SIP submitted by the Commonwealth of Kentucky on June 25, 2008, and May 28, 2010, as meeting some of the applicable regional haze requirements as set forth in sections 169A and 169B of the CAA and in 40 CFR 51.300–308.

V. Statutory and Executive Order Reviews

A. Executive Order 12866, Regulatory Planning and Review

The Office of Management and Budget (OMB) has exempted this regulatory action from Executive Order 12866, entitled ''Regulatory Planning and Review.''

B. Paperwork Reduction Act

Under the Paperwork Reduction Act, 44 U.S.C. 3501 *et seq.,* OMB must approve all ''collections of information'' by EPA. The Act defines ''collection of information'' as a requirement for answers to * * * identical reporting or recordkeeping requirements imposed on ten or more persons * * *. 44 U.S.C. 3502(3)(A). The Paperwork Reduction Act does not apply to this action.

C. Regulatory Flexibility Act (RFA)

The RFA generally requires an agency to conduct a regulatory flexibility analysis of any rule subject to notice and comment rulemaking requirements unless the agency certifies that the rule will not have a significant economic impact on a substantial number of small entities. Small entities include small businesses, small not-for-profit enterprises, and small governmental jurisdictions.

This rule will not have a significant impact on a substantial number of small entities because SIP approvals under section 110 and subchapter I, part D of the CAA do not create any new requirements but simply approve requirements that the Commonwealth is already imposing. Therefore, because the federal SIP approval does not create any new requirements, I certify that this action will not have a significant economic impact on a substantial number of small entities.

Moreover, due to the nature of the federal-state relationship under the CAA, preparation of flexibility analysis would constitute federal inquiry into the economic reasonableness of state action. The CAA forbids EPA to base its actions concerning SIPs on such grounds. *Union Electric Co.,* v. *EPA,* 427 U.S. 246, 255–66 (1976); 42 U.S.C. 7410(a)(2).

D. Unfunded Mandates Reform Act (UMRA)

Under sections 202 of the UMRA of 1995 (''Unfunded Mandates Act''), signed into law on March 22, 1995, EPA must prepare a budgetary impact statement to accompany any proposed or final rule that includes a federal mandate that may result in estimated costs to state, local, or tribal governments in the aggregate; or to the private sector, of $100 million or more. Under section 205, EPA must select the most cost-effective and least burdensome alternative that achieves the objectives of the rule and is consistent with statutory requirements. Section 203 requires EPA to establish a plan for informing and advising any small governments that may be significantly or uniquely impacted by the rule.

EPA has determined that today's action does not include a federal mandate that may result in estimated costs of $100 million or more to either state, local, or tribal governments in the aggregate, or to the private sector. This federal action approves pre-existing requirements under state or local law, and imposes no new requirements. Accordingly, no additional costs to state, local, or tribal governments, or to the private sector, result from this action.

E. Executive Order 13132, Federalism

Federalism (64 FR 43255, August 10, 1999) revokes and replaces Executive Orders 12612 (Federalism) and 12875 (Enhancing the Intergovernmental Partnership). Executive Order 13132 requires EPA to develop an accountable process to ensure ''meaningful and timely input by State and local officials in the development of regulatory policies that have Federalism implications.'' ''Policies that have federalism implications'' is defined in the Executive Order to include regulations that have ''substantial direct effects on the states, on the relationship between the national government and the states, or on the distribution of power and responsibilities among the various levels of government.'' Under Executive Order 13132, EPA may not issue a regulation that has Federalism implications, that imposes substantial direct compliance costs, and that is not required by statute, unless the federal government provides the funds necessary to pay the direct compliance costs incurred by state and local governments, or EPA consults with state and local officials early in the process of developing the proposed regulation. EPA also may not issue a regulation that has Federalism implications and that preempts state law unless the Agency consults with state and local officials early in the process of developing the proposed regulation.

This rule will not have substantial direct effects on the states, on the relationship between the national government and the states, or on the distribution of power and responsibilities among the various levels of government, as specified in Executive Order 13132, because it merely approves a state rule implementing a federal standard, and does not alter the relationship or the distribution of power and responsibilities established in the CAA. Thus, the requirements of section 6 of the Executive Order do not apply to this rule.

F. Executive Order 13175, Coordination With Indian Tribal Governments

Executive Order 13175, entitled ''Consultation and Coordination with Indian Tribal Governments'' (65 FR 67249, November 9, 2000), requires EPA to develop an accountable process to ensure ''meaningful and timely input by tribal officials in the development of regulatory policies that have tribal implications.'' This rule does not have tribal implications, as specified in Executive Order 13175. It will not have substantial direct effects on tribal governments. Thus, Executive Order 13175 does not apply to this rule.

G. Executive Order 13045, Protection of Children From Environmental Health Risks and Safety Risks

Protection of Children from Environmental Health Risks and Safety Risks (62 FR 19885, April 23, 1997), applies to any rule that: (1) Is determined to be ''economically significant'' as defined under Executive Order 12866, and (2) concerns an environmental health or safety risk that EPA has reason to believe may have a disproportionate effect on children. If the regulatory action meets both criteria, the Agency must evaluate the environmental health or safety effects of the planned rule on children, and explain why the planned regulation is preferable to other potentially effective and reasonably feasible alternatives considered by the Agency.

This rule is not subject to Executive Order 13045 because it does not involve decisions intended to mitigate environmental health or safety risks.

H. Executive Order 13211, Actions That Significantly Affect Energy Supply, Distribution, or Use

This rule is not subject to Executive Order 13211, ''Actions Concerning Regulations That Significantly Affect Energy Supply, Distribution, or Use'' (66 FR 28355, May 22, 2001) because it is not a significant regulatory action under Executive Order 12866.

I. National Technology Transfer and Advancement Act (NTTAA)

Section 12 of the NTTAA of 1995 requires federal agencies to evaluate existing technical standards when developing a new regulation. To comply with NTTAA, EPA must consider and use ''voluntary consensus standards'' (VCS) if available and applicable when developing programs and policies unless doing so would be inconsistent with applicable law or otherwise impractical.

EPA believes that VCS are inapplicable to this action. Today's action does not require the public to perform activities conducive to the use of VCS.

J. Congressional Review Act

The Congressional Review Act, 5 U.S.C. 801 *et seq.,* as added by the Small Business Regulatory Enforcement Fairness Act of 1996, generally provides that before a rule may take effect, the agency promulgating the rule must submit a rule report, which includes a copy of the rule, to each House of the Congress and to the Comptroller General of the United States. EPA will submit a report containing this rule and other required information to the U.S. Senate, the U.S. House of Representatives, and the Comptroller General of the United States prior to publication of the rule in the **Federal Register**. A major rule cannot take effect until 60 days after it is published in the **Federal Register**. This action is not a ''major rule'' as defined by 5 U.S.C. 804(2).

K. Petitions for Judicial Review

Under section 307(b)(1) of the CAA, petitions for judicial review of this action must be filed in the United States Court of Appeals for the appropriate circuit by May 29, 2012. Filing a petition for reconsideration by the Administrator of this final rule does not affect the finality of this rule for the purposes of judicial review nor does it extend the time within which a petition for judicial review may be filed, and shall not postpone the effectiveness of such rule or action. This action may not be challenged later in proceedings to enforce its requirements. *See* section 307(b)(2).

List of Subjects in 40 CFR Part 52

Environmental protection, Air pollution control, Incorporation by reference, Intergovernmental relations, Nitrogen dioxide, Particulate matter, Reporting and recordkeeping requirements, Sulfur oxides, Volatile organic compounds.

Authority: 42 U.S.C. 7401 *et seq.*

Dated: March 13, 2012.

A. Stanley Meiburg,

Acting Regional Administrator, Region 4.

40 CFR part 52 is amended as follows:

PART 52—[AMENDED]

■ 1. The authority citation for part 52 continues to read as follows:

Authority: 42 U.S.C. 7401 *et seq.*

Subpart S—Kentucky

■ 2. Section 52.936 is added to read as follows:

§ 52.936 Visibility protection.

(a) The requirements of section 169A of the Clean Air Act are not met because the plan does not include approvable measures for meeting the requirements of 40 CFR 51.308 for protection of visibility in mandatory Class I federal areas.

(b) [Reserved]

[FR Doc. 2012–7575 Filed 3–29–12; 8:45 am]

BILLING CODE 6560–50–P

ENVIRONMENTAL PROTECTION AGENCY

40 CFR Part 180

[EPA–HQ–OPP–2010–0536; FRL–9343–1]

Bacillus Pumilus Strain GHA 180; Exemption From the Requirement of a Tolerance

AGENCY: Environmental Protection Agency (EPA).

ACTION: Final rule.

SUMMARY: This regulation establishes an exemption from the requirement of a tolerance for residues of *Bacillus pumilus* strain GHA 180 in or on all food commodities when used in accordance with good agricultural practices. Premier Horticulture submitted a petition to EPA under the Federal Food, Drug, and Cosmetic Act (FFDCA), requesting an exemption from the requirement of a tolerance. This regulation eliminates the need to establish a maximum permissible level for residues of *Bacillus pumilus* strain GHA 180.

DATES: This regulation is effective March 30, 2012. Objections and requests for hearings must be received on or before May 29, 2012, and must be filed in accordance with the instructions provided in 40 CFR part 178 (see also Unit I.C. of the **SUPPLEMENTARY INFORMATION**).

ADDRESSES: EPA has established a docket for this action under docket identification (ID) number EPA–HQ–OPP–2010–0536. All documents in the docket are listed in the docket index available at *http://www.regulations.gov.* Although listed in the index, some information is not publicly available, e.g., Confidential Business Information (CBI) or other information whose disclosure is restricted by statute. Certain other material, such as copyrighted material, is not placed on the Internet and will be publicly available only in hard copy form. Publicly available docket materials are available in the electronic docket at *http://www.regulations.gov,* or, if only available in hard copy, at the OPP Regulatory Public Docket in Rm. S–4400, One Potomac Yard (South Bldg.), 2777 S. Crystal Dr., Arlington, VA. The Docket Facility is open from 8:30 a.m. to 4 p.m., Monday through Friday, excluding legal holidays. The Docket Facility telephone number is (703) 305–5805.

FOR FURTHER INFORMATION CONTACT: Susanne Cerrelli, Biopesticides and Pollution Prevention Division (7511P), Office of Pesticide Programs, Environmental Protection Agency, 1200 Pennsylvania Ave. NW., Washington, DC 20460–0001; telephone number: (703) 308–8077; email address: *cerrelli.susanne@epa.gov.*

SUPPLEMENTARY INFORMATION:

I. General Information

A. Does this action apply to me?

You may be potentially affected by this action if you are an agricultural producer, food manufacturer, or pesticide manufacturer. Potentially affected entities may include, but are not limited to:

- Crop production (NAICS code 111).
- Animal production (NAICS code 112).
- Food manufacturing (NAICS code 311).
- Pesticide manufacturing (NAICS code 32532).

This listing is not intended to be exhaustive, but rather provides a guide for readers regarding entities likely to be affected by this action. Other types of entities not listed in this unit could also be affected. The North American Industrial Classification System (NAICS) codes have been provided to assist you and others in determining whether this action might apply to certain entities. If you have any questions regarding the applicability of this action to a particular entity, consult the person listed under **FOR FURTHER INFORMATION CONTACT**.

B. How can I get electronic access to other related information?

You may access a frequently updated electronic version of 40 CFR part 180 through the Government Printing Office's e-CFR site at *http://ecfr.gpoaccess.gov/cgi/t/text/text-idx?&c=ecfr&tpl=/ecfrbrowse/Title40/40tab_02.tpl.* To access the OCSPP test guidelines referenced in this document electronically, go to: *http://www.epa.gov/ocspp* and select ''Test Methods and Guidelines.''

C. How can I file an objection or hearing request?

Under FFDCA section 408(g), 21 U.S.C. 346a, any person may file an objection to any aspect of this regulation and may also request a hearing on those objections. You must file your objection or request a hearing on this regulation in accordance with the instructions provided in 40 CFR part 178. To ensure proper receipt by EPA, you must identify docket ID number EPA–HQ–OPP–2010–0536 in the subject line on the first page of your submission. All objections and requests for a hearing must be in writing, and must be received by the Hearing Clerk on or before May 29, 2012. Addresses for mail and hand delivery of objections and hearing requests are provided in 40 CFR 178.25(b).

In addition to filing an objection or hearing request with the Hearing Clerk as described in 40 CFR part 178, please submit a copy of the filing that does not contain any CBI for inclusion in the public docket. Information not marked confidential pursuant to 40 CFR part 2 may be disclosed publicly by EPA without prior notice. Submit a copy of your non-CBI objection or hearing request, identified by docket ID number EPA–HQ–OPP–2010–0536, by one of the following methods:

- *Federal eRulemaking Portal: http://www.regulations.gov.* Follow the online instructions for submitting comments.
- *Mail:* Office of Pesticide Programs (OPP) Regulatory Public Docket (7502P), Environmental Protection Agency, 1200 Pennsylvania Ave. NW., Washington, DC 20460–0001.
- *Delivery:* OPP Regulatory Public Docket (7502P), Environmental Protection Agency, Rm. S–4400, One

Potomac Yard (South Bldg.), 2777 S. Crystal Dr., Arlington, VA. Deliveries are only accepted during the Docket Facility's normal hours of operation (8:30 a.m. to 4 p.m., Monday through Friday, excluding legal holidays). Special arrangements should be made for deliveries of boxed information. The Docket Facility telephone number is (703) 305–5805.

II. Background and Statutory Findings

In the **Federal Register** of September 30, 2010 (75 FR 60452) (FRL–8837–2), EPA issued a notice pursuant to FFDCA section 408(d)(3), 21 U.S.C. 346a(d)(3), announcing the filing of a pesticide tolerance petition (PP 0F7698) by Premier Horticulture, 1, Avenue Premier, Riviere-du-Loup, Quebec, Canada. The petition requested that 40 CFR part 180 be amended by establishing an exemption from the requirement of a tolerance for residues of *Bacillus pumilus* GHA 180. This notice referenced a summary of the petition prepared by the petitioner Premier Horticulture, which is available in the docket via *http://www.regulations.gov.* There were no comments received in response to the notice of filing.

Section 408(c)(2)(A)(i) of FFDCA allows EPA to establish an exemption from the requirement for a tolerance (the legal limit for a pesticide chemical residue in or on a food) only if EPA determines that the exemption is ''safe.'' Section 408(c)(2)(A)(ii) of FFDCA defines ''safe'' to mean that ''there is a reasonable certainty that no harm will result from aggregate exposure to the pesticide chemical residue, including all anticipated dietary exposures and all other exposures for which there is reliable information.'' This includes exposure through drinking water and in residential settings, but does not include occupational exposure. Pursuant to FFDCA section 408(c)(2)(B), in establishing or maintaining in effect an exemption from the requirement of a tolerance, EPA must take into account the factors set forth in FFDCA section 408(b)(2)(C), which require EPA to give special consideration to exposure of infants and children to the pesticide chemical residue in establishing a tolerance and to ''ensure that there is a reasonable certainty that no harm will result to infants and children from aggregate exposure to the pesticide chemical residue. * * *'' Additionally, FFDCA section 408(b)(2)(D) requires that the Agency consider ''available information concerning the cumulative effects of a particular pesticide's residues'' and ''other substances that have a common mechanism of toxicity.''

EPA performs a number of analyses to determine the risks from aggregate exposure to pesticide residues. First, EPA determines the toxicity of pesticides. Second, EPA examines exposure to the pesticide through food, drinking water, and through other exposures that occur as a result of pesticide use in residential settings.

III. Toxicological Profile

Consistent with FFDCA section 408(b)(2)(D), EPA has reviewed the available scientific data and other relevant information in support of this action and considered its validity, completeness and reliability, and the relationship of this information to human risk. EPA has also considered available information concerning the variability of the sensitivities of major identifiable subgroups of consumers, including infants and children.

Bacillus pumilus strain GHA 180 is a bacterium discovered in the root zone of apple trees in Mexico. It colonizes plant roots and produces metabolites that suppress the fungal plant pathogens *Pythium ultimum, Fusarium oxysporum, Rhizoctonia solani* and *Alternaria spp.*

Adequate mammalian toxicology data and information were submitted to support *Bacillus pumilus* strain GHA 180 pesticide products. The Draft Biopesticide Registration Action Document (BRAD) for *Bacillus pumilus* strain GHA 180 provides detailed information regarding these tests (Ref. 1), which are summarized in this unit.

1. *Acute Injection Toxicity/Pathogenicity (OCSPP Guideline 885.3200; Master Record Identification Number (MRID) No. 48005025): Bacillus pumilus* GHA 180 was not toxic and/or pathogenic to laboratory rats given a single intravenous dose of 6.8×10^7 colony forming units (CFU).

2. *Acute Oral Toxicity (OCSPP Guideline 870.1100; MRID No. 48005020): Bacillus pumilus* GHA 180 was not toxic to rats given a single oral dose by gavage [median lethal dose (LD_{50}) >5,000 milligrams/kilograms (mg/kg) body weight (bw), Toxicity Category IV].

3. *Acute Dermal Toxicity (OCSPP Guideline 870.1200; MRID 48005021): Bacillus pumilus* GHA180 was not toxic to rats when applied to the skin (LD_{50} >5050 mg/kg bw, Toxicity Category IV).

4. *Acute Inhalation Toxicity (OCSPP Guideline 870.1300; MRID 48005022):* No signs of toxicity or other adverse effects occurred in rats exposed nose-only to an aerosol containing *Bacillus pumilus* GHA 180 Technical Grade of the Active Ingredient (TGAI) (2.18 mg/L) for 4 hours (LC_{50} >2.18 mg/L, EPA Toxicity Category IV).

5. *Acute Eye Irritation (OCSPP Guideline 870.2400; MRID 48005023): Bacillus pumilus* GHA 180 was mildly irritating to the eyes of rabbits (Toxicity Category III).

6. *Primary Dermal Irritation (OCSPP Guideline 870.2500; MRID 48005024): Bacillus pumilus* GHA 180 TGAI was nonirritating to the skin of rabbits (Toxicity Category IV).

IV. Aggregate Exposures

In examining aggregate exposure, FFDCA section 408 directs EPA to consider available information concerning exposures from the pesticide residue in food and all other non-occupational exposures, including drinking water from ground water or surface water and exposure through pesticide use in gardens, lawns, or buildings (residential and other indoor uses).

A. Dietary Exposure

1. *Food. Bacillus* species, including *Bacillus pumilus,* are common in soils (Ref. 2). Dried food, such as spices, milk powder and grains, often contain large amounts of *Bacillus* spores (Ref. 3), and *Bacillus pumilus* is a natural component of fermented fish sauce and cocoa bean fermentations (Ref. 4). *Bacillus pumilus* strain GHA 180 is not known to produce mammalian toxins, and no foodborne disease outbreaks have been reported. Based on the results of toxicity studies conducted with *Bacillus pumilus* strain GHA 180 TGAI, no toxicity, infectivity, pathogenicity or other adverse effects from dietary exposure to this bacterium from its pesticide uses are expected (see Unit III.).

2. *Drinking water exposure.* According to the World Health Organization, *Bacillus* species are often detected in drinking water even after going through disinfection processes at water treatment facilities (Ref. 5). If residues of *Bacillus pumilus* GHA 180 occur in drinking water from its pesticide uses, no adverse effects are expected based on the results of toxicity studies described in Unit III.

B. Other Non-Occupational Exposure

Pesticide products with the active ingredient *Bacillus pumilus* strain GHA 180 are only used in greenhouses and contained nurseries. Non-occupational exposures may occur in populations that access residential greenhouses and apply these pesticide products or handle soils that have been treated with *Bacillus pumilus* GHA 180. The personal protective equipment indicated on the label are expected to be adequate

to minimize human exposure to those handling pesticide products containing *Bacillus pumilus* GHA 180. Should human exposure occur, however, no adverse effects are expected based on the lack of toxicity, infectivity and pathogenicity in the studies described in Unit III.

V. Cumulative Effects From Substances With a Common Mechanism of Toxicity

Section 408(b)(2)(D)(v) of FFDCA requires that, when considering whether to establish, modify, or revoke a tolerance, the Agency consider ''available information'' concerning the cumulative effects of a particular pesticide's residues and ''other substances that have a common mechanism of toxicity.''

EPA has not found *Bacillus pumilus* strain GHA 180 to share a common mechanism of toxicity with any other substances, and *Bacillus pumilus* strain GHA 180 does not appear to produce a toxic metabolite produced by other substances. For the purposes of this tolerance action, therefore, EPA has assumed that *Bacillus pumilus* strain GHA 180 does not have a common mechanism of toxicity with other substances. For information regarding EPA's efforts to determine which chemicals have a common mechanism of toxicity and to evaluate the cumulative effects of such chemicals, see EPA's Web site at *http://www.epa.gov/pesticides/cumulative.*

VI. Determination of Safety for U.S. Population, Infants and Children

FFDCA section 408(b)(2)(C) provides that EPA shall assess the available information about consumption patterns among infants and children, special susceptibility of infants and children to pesticide chemical residues, and the cumulative effects on infants and children of the residues and other substances with a common mechanism of toxicity. In addition, FFDCA section 408(b)(2)(C) provides that EPA shall apply an additional tenfold (10X) margin of safety for infants and children in the case of threshold effects to account for prenatal and postnatal toxicity and the completeness of the database on toxicity and exposure unless EPA determines that a different margin of safety will be safe for infants and children. This additional margin of safety is commonly referred to as the FQPA Safety Factor. In applying this provision, EPA either retains the default value of 10X or uses a different additional safety factor when reliable data available to EPA support the choice of a different factor.

Based on the acute toxicity and pathogenicity data summarized in Unit III., EPA concludes that there is a reasonable certainty that no harm will result to the U.S. population, including infants and children, from aggregate exposure to the residues of *Bacillus pumilus* strain GHA180. This includes all anticipated dietary exposures and all other exposures for which there is reliable information. EPA has arrived at this conclusion because the data and information available on *Bacillus pumilus* strain GHA 180 does not demonstrate toxic, pathogenic, and/or infective potential to mammals. Because there are no threshold effects of concern, the provision requiring an additional margin of safety does not apply.

VII. Other Considerations

A. Analytical Enforcement Methodology

An analytical method is not required for enforcement purposes since the Agency is establishing an exemption from the requirement of a tolerance without any numerical limitation.

B. International Residue Limits

In making its tolerance decisions, EPA seeks to harmonize U.S. tolerances with international standards whenever possible, consistent with U.S. food safety standards and agricultural practices. EPA considers the international maximum residue limits (MRLs) established by the Codex Alimentarius Commission (Codex), as required by FFDCA section 408(b)(4). The Codex Alimentarius is a joint United Nations Food and Agriculture Organization/World Health Organization food standards program, and it is recognized as an international food safety standards-setting organization in trade agreements to which the United States is a party. EPA may establish a tolerance that is different from a Codex MRL; however, FFDCA section 408(b)(4) requires that EPA explain the reasons for departing from the Codex level.

The Codex has not established a MRL for *Bacillus pumilus* strain GHA 180.

VIII. Conclusions

Therefore, an exemption is established for residues of *Bacillus pumilus* strain GHA180 in or on all food commodities when used in accordance with good agricultural practices.

IX. References

1. U.S. EPA. February 2012. Draft Biopesticides Registration Action Document of *Bacillus pumilus* strain GHA 180.
2. Logan, N.A., and P. de Vos. 2009. Genus I. Bacillus, pp. 21–128 In: P. de Vos, G.M. Garrity, D. Jones, N.R. Krieg, W. Ludwig, F.A. Rainey, K.H. Schleifer, and W. Whitman (Eds.) Bergey's Manual of Systematic Bacteriology, Volume 3, 2nd Ed. Springer, New York.
3. Murray, P.R, *et al.,* Manual of Clinical Microbiology. Washington, D. C.: ASM Press; 9th edition, 2007.
4. Doyle, M.P., L.R. Beuchat and T.J. Montville. 1997. Food Microbiology: Fundamentals and Frontiers. American Society for Microbiology, Washington, DC
5. World Health Organization, Guidelines for Drinking-water Quality. (2011) Fourth Edition.

X. Statutory and Executive Order Reviews

This final rule establishes an exemption from the requirement of a tolerance under section 408(d) of FFDCA in response to a petition submitted to the Agency. The Office of Management and Budget (OMB) has exempted these types of actions from review under Executive Order 12866, entitled *Regulatory Planning and Review* (58 FR 51735, October 4, 1993). Because this final rule has been exempted from review under Executive Order 12866, this final rule is not subject to Executive Order 13211, entitled ''Actions Concerning Regulations That Significantly Affect Energy Supply, Distribution, or Use'' (66 FR 28355, May 22, 2001) or Executive Order 13045, entitled ''Protection of Children from Environmental Health Risks and Safety Risks'' (62 FR 19885, April 23, 1997). This final rule does not contain any information collections subject to OMB approval under the Paperwork Reduction Act (PRA), 44 U.S.C. 3501 *et seq.,* nor does it require any special considerations under Executive Order 12898, entitled ''Federal Actions to Address Environmental Justice in Minority Populations and Low-Income Populations'' (59 FR 7629, February 16, 1994).

Since tolerances and exemptions that are established on the basis of a petition under FFDCA section 408(d), such as the tolerance exemption in this final rule, do not require the issuance of a proposed rule, the requirements of the Regulatory Flexibility Act (RFA) (5 U.S.C. 601 *et seq.*) do not apply.

XI. Congressional Review Act

The Congressional Review Act, 5 U.S.C. 801 *et seq.,* generally provides that before a rule may take effect, the agency promulgating the rule must submit a rule report to each House of the Congress and to the Comptroller General of the United States. EPA will

submit a report containing this rule and other required information to the U.S. Senate, the U.S. House of Representatives, and the Comptroller General of the United States prior to publication of this final rule in the **Federal Register**. This final rule is not a ''major rule'' as defined by 5 U.S.C. 804(2).

List of Subjects in 40 CFR Part 180

Environmental protection, Administrative practice and procedure, Agricultural commodities, Pesticides and pests, Reporting and recordkeeping requirements.

Dated: March 15, 2012.

Marty Monell,

Acting Director, Office of Pesticide Programs.

Therefore, 40 CFR chapter I is amended as follows:

PART 180—[AMENDED]

■ 1. The authority citation for part 180 continues to read as follows:

Authority: 21 U.S.C. 321(q), 346a and 371.

■ 2. Section 180.1313 is added to subpart D to read as follows:

§ 180.1313 Bacillus pumilus strain GHA 180; exemption from the requirement of a tolerance.

An exemption from the requirement of a tolerance is established for residues of *Bacillus pumilus* strain GHA 180 in or on all food commodities when used in accordance with good agricultural practices.

[FR Doc. 2012–7490 Filed 3–29–12; 8:45 am]

BILLING CODE 6560–50–P

DEPARTMENT OF HOMELAND SECURITY

Federal Emergency Management Agency

44 CFR Part 67

[Docket ID FEMA–2012–0003]

Final Flood Elevation Determinations

AGENCY: Federal Emergency Management Agency, DHS.

ACTION: Final rule.

SUMMARY: Base (1% annual-chance) Flood Elevations (BFEs) and modified BFEs are made final for the communities listed below. The BFEs and modified BFEs are the basis for the floodplain management measures that each community is required either to adopt or to show evidence of being already in effect in order to qualify or remain qualified for participation in the National Flood Insurance Program (NFIP).

DATES: The date of issuance of the Flood Insurance Rate Map (FIRM) showing BFEs and modified BFEs for each community. This date may be obtained by contacting the office where the maps are available for inspection as indicated in the table below.

ADDRESSES: The final BFEs for each community are available for inspection at the office of the Chief Executive Officer of each community. The respective addresses are listed in the table below.

FOR FURTHER INFORMATION CONTACT: Luis Rodriguez, Chief, Engineering Management Branch, Federal Insurance and Mitigation Administration, Federal Emergency Management Agency, 500 C Street SW., Washington, DC 20472, (202) 646–4064, or (email) *Luis.Rodriguez3@fema.dhs.gov.*

SUPPLEMENTARY INFORMATION: The Federal Emergency Management Agency (FEMA) makes the final determinations listed below for the modified BFEs for each community listed. These modified elevations have been published in newspapers of local circulation and ninety (90) days have elapsed since that publication. The Deputy Associate Administrator for Mitigation has resolved any appeals resulting from this notification.

This final rule is issued in accordance with section 110 of the Flood Disaster Protection Act of 1973, 42 U.S.C. 4104, and 44 CFR part 67. FEMA has developed criteria for floodplain management in floodprone areas in accordance with 44 CFR part 60.

Interested lessees and owners of real property are encouraged to review the proof Flood Insurance Study and FIRM available at the address cited below for each community. The BFEs and modified BFEs are made final in the communities listed below. Elevations at selected locations in each community are shown.

National Environmental Policy Act. This final rule is categorically excluded from the requirements of 44 CFR part 10, Environmental Consideration. An environmental impact assessment has not been prepared.

Regulatory Flexibility Act. As flood elevation determinations are not within the scope of the Regulatory Flexibility Act, 5 U.S.C. 601–612, a regulatory flexibility analysis is not required.

Regulatory Classification. This final rule is not a significant regulatory action under the criteria of section 3(f) of Executive Order 12866 of September 30, 1993, Regulatory Planning and Review, 58 FR 51735.

Executive Order 13132, Federalism. This final rule involves no policies that have federalism implications under Executive Order 13132.

Executive Order 12988, Civil Justice Reform. This final rule meets the applicable standards of Executive Order 12988.

List of Subjects in 44 CFR Part 67

Administrative practice and procedure, Flood insurance, Reporting and recordkeeping requirements.

Accordingly, 44 CFR part 67 is amended as follows:

PART 67—[AMENDED]

■ 1. The authority citation for part 67 continues to read as follows:

Authority: 42 U.S.C. 4001 *et seq.;* Reorganization Plan No. 3 of 1978, 3 CFR, 1978 Comp., p. 329; E.O. 12127, 44 FR 19367, 3 CFR, 1979 Comp., p. 376.

§ 67.11 [Amended]

■ 2. The tables published under the authority of § 67.11 are amended as follows:

Flooding source(s)	Location of referenced elevation	* Elevation in feet (NGVD) + Elevation in feet (NAVD) # Depth in feet above ground ∧ Elevation in meters (MSL) Modified	Communities affected
Sumter County, Alabama, and Incorporated Areas Docket No.: FEMA–B–1110			
Factory Creek (backwater effects from Tombigbee River).	From the confluence with the Tombigbee River to approximately 1,600 feet upstream of County Road 21.	+115	Unincorporated Areas of Sumter County.
Fenache Creek (backwater effects from Tombigbee River).	From the confluence with the Tombigbee River to approximately 0.5 mile downstream of County Road 4.	+126	Unincorporated Areas of Sumter County.
Folsum Branch (backwater effects from Tombigbee River).	From the confluence with the Tombigbee River to approximately 500 feet upstream of Fulson Brand Road.	+120	Town of Gainesville.
High Run (backwater effects from Tombigbee River).	From the confluence with the Tombigbee River to approximately 2.3 miles upstream of the confluence with the Tombigbee River.	+103	Unincorporated Areas of Sumter County.
Jones Creek (backwater effects from Tombigbee River).	From the confluence with the Tombigbee River to approximately 2,100 feet upstream of County Road 20.	+114	Town of Epes.
Noxubee River (backwater effects from Tombigbee River).	From the confluence with the Tombigbee River to approximately 7.3 miles upstream of County Road 85.	+122	Unincorporated Areas of Sumter County.
Sandy Creek	Approximately 1 mile downstream of Alabama Highway 28.	+115	Unincorporated Areas of Sumter County.
	Approximately 1,673 feet downstream of East Park Road	+117	
Sucarnoochee River	Approximately 1.6 miles downstream of the railroad	+115	Unincorporated Areas of Sumter County.
	Approximately 1.4 miles upstream of U.S. Route 11	+120	
Tombigbee River	Approximately 29.4 miles downstream of U.S. Route 11	+95	Town of Epes.
	Approximately 12.7 miles upstream of the Gainesville Dam.	+130	
Tombigbee River Tributary 13 (backwater effects from Tombigbee River).	From the confluence with the Tombigbee River to approximately 585 feet downstream of Unnamed Road.	+108	Unincorporated Areas of Sumter County.
Tombigbee River Tributary 16 (backwater effects from Tombigbee River).	From the confluence with the Tombigbee River to approximately 740 feet downstream of Port of Epes Highway.	+113	Unincorporated Areas of Sumter County.
Tombigbee River Tributary 7 (backwater effects from Tombigbee River).	From the confluence with the Tombigbee River to approximately 1.2 miles downstream of Pine Top Road.	+96	Unincorporated Areas of Sumter County.
Tombigbee River Tributary 8 (backwater effects from Tombigbee River).	From the confluence with the Tombigbee River to approximately 0.6 mile upstream of Trails End Road.	+101	Unincorporated Areas of Sumter County.
Toomsuba Creek	Approximately 0.7 mile downstream of the railroad	+148	Unincorporated Areas of Sumter County.
	Approximately 750 feet upstream of U.S. Route 11	+164	
Whiterock Creek (backwater effects from Sucarnoochee River).	From the confluence with the Sucarnoochee River to approximately 1,073 feet downstream of Arrington Street.	+116	Unincorporated Areas of Sumter County.

* National Geodetic Vertical Datum.
+ North American Vertical Datum.
# Depth in feet above ground.
∧ Mean Sea Level, rounded to the nearest 0.1 meter.

ADDRESSES

Town of Epes
Maps are available for inspection at 40 Carrol Street, Epes, AL 35464.

Town of Gainesville
Maps are available for inspection at 9380 State Street, Gainesville, AL 35464.

Unincorporated Areas of Sumter County
Maps are available for inspection at 318 Washington Street, Livingston, AL 35470.

El Dorado County, California, and Incorporated Areas Docket No.: FEMA–B–1171			
Bijou Creek	Approximately 100 feet upstream of the Lake Tahoe confluence.	+6234	City of South Lake Tahoe.
	Approximately 550 feet upstream of Pioneer Trail	+6347	
Trout Creek	Approximately 1,750 feet upstream of the Lake Tahoe confluence.	+6234	City of South Lake Tahoe, Unincorporated Areas of El Dorado County.
	Approximately 1,580 feet downstream of Martin Avenue	+6251	

Flooding source(s)	Location of referenced elevation	* Elevation in feet (NGVD) + Elevation in feet (NAVD) # Depth in feet above ground ∧ Elevation in meters (MSL) Modified	Communities affected
Upper Truckee River	Approximately 1,400 feet downstream of Lake Tahoe Boulevard.	+6241	City of South Lake Tahoe, Unincorporated Areas of El Dorado County.
	Approximately 1.44 miles upstream of Lake Tahoe Boulevard.	+6251	

* National Geodetic Vertical Datum.
+ North American Vertical Datum.
# Depth in feet above ground.
∧ Mean Sea Level, rounded to the nearest 0.1 meter.

ADDRESSES

City of South Lake Tahoe

Maps are available for inspection at 1900 Lake Tahoe Boulevard, South Lake Tahoe, CA 96150.

Unincorporated Areas of El Dorado County

Maps are available for inspection at 2850 Fairlane Court, Placerville, CA 95667.

East Feliciana Parish, Louisiana, and Incorporated Areas
Docket No.: FEMA–B–1085

Amite River	Approximately 2.0 miles downstream of State Highway 37	+110	Unincorporated Areas of East Feliciana Parish.
	Just downstream from the northeast corner of the Amite County, Mississippi, line.	+205	
Pretty Creek	Flooding effects from Pretty Creek extending 1.0 mile west and 1.0 mile east from the confluence with the Comite River.	+170	Unincorporated Areas of East Feliciana Parish.
	Flooding effects from Pretty Creek extending 1.5 mile west from State Highway 10.	+183	

* National Geodetic Vertical Datum.
+ North American Vertical Datum.
# Depth in feet above ground.
∧ Mean Sea Level, rounded to the nearest 0.1 meter.

ADDRESSES

Unincorporated Areas of East Feliciana Parish

Maps are available for inspection at 12064 Marston Street, Clinton, LA 70722.

Livingston Parish, Louisiana, and Incorporated Areas
Docket No.: FEMA–B–7771

Lake Maurepas—Entire Shoreline.	Highest elevation approximately 40,800 feet south of the confluence with the Amite River.	+9	Unincorporated Areas of Livingston Parish.
	Highest elevation at the confluence with the Tickfaw River	+10	

* National Geodetic Vertical Datum.
+ North American Vertical Datum.
# Depth in feet above ground.
∧ Mean Sea Level, rounded to the nearest 0.1 meter.

ADDRESSES

Unincorporated Areas of Livingston Parish

Maps are available for inspection at 29261 Frost Road, Livingston, LA 70754.

Tuscola County, Michigan (All Jurisdictions)
Docket No.: FEMA–B–1133

Cass River	Approximately 180 feet downstream of the CSX Railroad crossing.	+634	City of Vassar, Township of Tuscola, Township of Vassar.
	At Kirk Road, extended	+638	
Cat Lake/South Drain	Approximately 110 feet downstream of Harmon Lake Road.	+747	Township of Dayton.
	At Cat Lake, approximately 280 feet upstream of Lakeview Drive.	+749	
Gibson Drain	Approximately 2,680 feet north of Don Road	+585	Township of Gilford.
	Approximately 1,160 feet south of M–138	+585	
McPherson Drain	At Akron Road	+585	Township of Gilford.

Flooding source(s)	Location of referenced elevation	* Elevation in feet (NGVD) + Elevation in feet (NAVD) # Depth in feet above ground ∧ Elevation in meters (MSL) Modified	Communities affected
	Approximately 260 feet north of Dutcher Road	+585	
Northwest Drain Outlet No. 1	At the confluence with VCCM and S Drain	+585	Township of Gilford.
	Approximately 500 feet downstream of North Quanicassee Road.	+585	
Reese Drain	Upstream of Reese Road, approximately 310 feet south of Dixon Road.	+603	Township of Denmark, Village of Reese.
	Downstream of Reese Road, approximately 2,600 feet south of M–81.	+625	
Saginaw Bay	Entire shoreline within community	+585	Township of Akron, Township of Wisner.
VCCM and S Drain	Approximately 300 feet north of M–138	+585	Township of Gilford.
	At Akron Road	+585	
Wiscoggin Drain	At Loomis Road	+585	Township of Columbia.
	Approximately 380 feet upstream of Loomis Road	+585	

* National Geodetic Vertical Datum.
+ North American Vertical Datum.
# Depth in feet above ground.
∧ Mean Sea Level, rounded to the nearest 0.1 meter.

ADDRESSES

City of Vassar
Maps are available for inspection at City Hall, 287 East Huron Street, Vassar, MI 48768.

Township of Akron
Maps are available for inspection at 6649 North Vassar Road, Unionville, MI 48767.

Township of Columbia
Maps are available for inspection at the Columbia Township Library, 6456 Center Street, Unionville, MI 48767.

Township of Dayton
Maps are available for inspection at 4879 Hurds Corner Road, Mayville, MI 48744.

Township of Denmark
Maps are available for inspection at 9386 West Saginaw Street, Reese, MI 48757.

Township of Gilford
Maps are available for inspection at 171 Garner Road, Fairgrove, MI 48733.

Township of Tuscola
Maps are available for inspection at 8561 Van Cleve Road, Tuscola, MI 48769.

Township of Vassar
Maps are available for inspection at 4505 West Saginaw Road, Vassar, MI 48768.

Township of Wisner
Maps are available for inspection at 7894 M–25, Akron, MI 48701.

Village of Reese
Maps are available for inspection at 2073 Gates Street, Reese, MI 48757.

Washtenaw County, Michigan (All Jurisdictions)
Docket Nos.: FEMA–B–7774, FEMA–B–1100, and FEMA–B–1179

Allen Creek	Just downstream of Conrail Railroad	+769	City of Ann Arbor.
	Approximately 500 feet upstream of East Madison Street	+820	
Allen Creek Diversion	Just upstream of Miller Road	+795	City of Ann Arbor.
	Just downstream of Ann Arbor Railroad	+801	
Huron River	Approximately 620 feet downstream of the railroad	+718	Township of Superior.
	Approximately 630 feet upstream of Superior Road	+719	
Huron River	Just upstream of Whitmore Lake Road	+775	Village of Barton Hills.
	Approximately 1,700 feet downstream of Foster Road	+798	
Letts Creek	At the confluence with North Fork Mill Creek	+890	Township of Lima.
	Just upstream of Pierce Road	+928	
Mill Creek	At the mouth of the Huron River	+838	Township of Lima, Township of Scio, Township of Webster, Village of Dexter.
	Just upstream of North Parker Road	+863	
Millers Creek	Just upstream of Geddes Road	+752	City of Ann Arbor, Charter Township of Ann Arbor.
	Approximately 2,000 feet upstream of Baxter Road	+883	
Millers Creek Diversion	Just upstream of the confluence with Millers Creek	+753	City of Ann Arbor.
	Just downstream of the diversion from Millers Creek	+771	
North Fork Mill Creek	Approximately 800 feet downstream of Fletcher Road	+885	Township of Lima, Township of Sylvan, City of Chelsea.

Flooding source(s)	Location of referenced elevation	* Elevation in feet (NGVD) + Elevation in feet (NAVD) # Depth in feet above ground ∧ Elevation in meters (MSL) Modified	Communities affected
	Approximately 300 feet upstream of Conway Road	+934	
North Lake	Entire shoreline within community	+939	Township of Lyndon.
Paint Creek	At the Monroe County boundary	+652	Township of Augusta.
	Just downstream of East Bemis Road	+692	
River Raisin	Approximately 0.5 mile upstream of State Highway 52	+880	Township of Manchester.
	Approximately 0.6 mile upstream of State Highway 52	+880	
Saline River	Approximately 0.5 mile downstream of Macon Road	+736	Township of Saline.
	Approximately 1,500 feet upstream of Macon Road	+775	
Swift Drain	At the mouth of the Huron River	+754	Charter Township of Ann Arbor, Charter Township of Pittsfield, City of Ann Arbor, City of Chelsea.
	Just upstream of East Morgan Road	+831	
Traver Creek	At the mouth of the Huron River	+763	Charter Township of Ann Arbor, City of Ann Arbor.
	Approximately 2,000 feet upstream of Warren Road (just upstream of U.S. Route 23 southbound).	+935	
Traver Creek Diversion	At the confluence with Traver Creek	+901	City of Ann Arbor.
	At the diversion from Traver Creek	+907	
Tributary To Paint Creek	Approximately 2,400 feet downstream of Munger Road	+773	Charter Township of Pittsfield, Charter Township of Ypsilanti.
	Just downstream of Merritt Road	+821	
West Branch Paint Creek	Just upstream of the confluence with Paint Creek	+675	Township of Augusta.
	Just downstream of East Bemis Road	+698	
West Park Miller Drain	Just upstream of the confluence with Allen Creek	+801	City of Ann Arbor.
	Just downstream of Wesley Avenue	+845	
West Park Miller Drain South Branch.	At the confluence with West Park Miller Drain	+806	City of Ann Arbor.
	Approximately 60 feet downstream of North Revena Boulevard.	+851	
Wood Outlet Drain	Approximately 0.6 mile upstream of U.S. Route 12	+759	Township of Lodi.
	Just upstream of Saline Waterworks	+792	

* National Geodetic Vertical Datum.
+ North American Vertical Datum.
# Depth in feet above ground.
∧ Mean Sea Level, rounded to the nearest 0.1 meter.

ADDRESSES

Charter Township of Ann Arbor
Maps are available for inspection at 3792 Pontiac Trail, Ann Arbor, MI 48105.

Charter Township of Pittsfield
Maps are available for inspection at 6201 West Michigan Avenue, Ann Arbor, MI 48108.

Charter Township of Ypsilanti
Maps are available for inspection at 7200 South Huron River Drive, Ypsilanti, MI 48197.

City of Ann Arbor
Maps are available for inspection at 100 North 5th Avenue, Ann Arbor, MI 48104.

City of Chelsea
Maps are available for inspection at 104 East Middle Street, Chelsea, MI 48118.

Township of Augusta
Maps are available for inspection at 605 South Main, Whittaker, MI 48190.

Township of Lima
Maps are available for inspection at 11452 Jackson Road, Chelsea, MI 48118.

Township of Lodi
Maps are available for inspection at 3755 Pleasant Lake Road, Ann Arbor, MI 48103.

Township of Lyndon
Maps are available for inspection at 17751 North Territorial Road, Chelsea, MI 48118.

Township of Manchester
Maps are available for inspection at 275 South Macomb Street, Manchester, MI 48158.

Township of Saline
Maps are available for inspection at 5731 Braun Road, Saline, MI 48176.

Township of Scio
Maps are available for inspection at 2355 West Stadium Boulevard, Ann Arbor, MI 48107.

Township of Superior

Flooding source(s)	Location of referenced elevation	* Elevation in feet (NGVD) + Elevation in feet (NAVD) # Depth in feet above ground ∧ Elevation in meters (MSL) Modified	Communities affected

Maps are available for inspection at 3040 North Prospect Road, Ypsilanti, MI 48198.

Township of Sylvan

Maps are available for inspection at 18027 Old U.S. Route 12, Chelsea, MI 48118.

Township of Webster

Maps are available for inspection at 5665 Webster Church Road, Dexter, MI 48130.

Village of Barton Hills

Maps are available for inspection at 199 Barton Shore Drive, Ann Arbor, MI 48105.

Village of Dexter

Maps are available for inspection at 6880 Dexter-Pinckney Road, Dexter, MI 48130.

Meeker County, Minnesota, and Incorporated Areas
Docket No.: FEMA–B–1169

Jewett Creek	At the upstream side of State Highway 24	+1105	Unincorporated Areas of Meeker County.
	Approximately 676 feet downstream of Sibley Avenue	+1105	
Lake Ripley/East Lake Ripley	Entire shoreline within community	+1128	Unincorporated Areas of Meeker County.

* National Geodetic Vertical Datum.
+ North American Vertical Datum.
# Depth in feet above ground.
∧ Mean Sea Level, rounded to the nearest 0.1 meter.

ADDRESSES

Unincorporated Areas of Meeker County

Maps are available for inspection at the Meeker County Courthouse, 325 Sibley Avenue North, Litchfield, MN 55355.

Rice County, Minnesota, and Incorporated Areas
Docket No.: FEMA–B–1078

Cannon River	Approximately 4,460 feet downstream of Hester Street/County Highway 1.	+912	City of Morristown, City of Northfield, Unincorporated Areas of Rice County.
	At State Highway 60/Morristown Boulevard	+1003	
Spring Creek	Approximately 60 feet upstream of North Dennison Road/County Highway 28.	+945	City of Northfield, Unincorporated Areas of Rice County.
	Approximately 740 feet upstream of Ford Street	+ 970	

* National Geodetic Vertical Datum.
+ North American Vertical Datum.
# Depth in feet above ground.
∧ Mean Sea Level, rounded to the nearest 0.1 meter.

ADDRESSES

City of Morristown

Maps are available for inspection at City Hall, 402 Central Avenue, Morristown, MN 55052.

City of Northfield

Maps are available for inspection at City Hall, 801 Washington Street, Northfield, MN 55057.

Unincorporated Areas of Rice County

Maps are available for inspection at the Rice County Government Services Building, 320 Northwest 3rd Street, Faribault, MN 55021.

Haywood County, North Carolina, and Incorporated Areas
Docket Nos.: FEMA–B–7765 and FEMA–B–7790

Allen Creek	At the confluence with Richland Creek	+2741	Town of Waynesville, Unincorporated Areas of Haywood County.
	Approximately 0.6 mile upstream of New Allens Creek Road (State Road 1147).	+3093	
Beaverdam Creek	At the confluence with the Pigeon River	+2587	Town of Canton, Unincorporated Areas of Haywood County.
	Just downstream of Smathers Cove Road (State Road 1614).	+2712	

Flooding source(s)	Location of referenced elevation	* Elevation in feet (NGVD) + Elevation in feet (NAVD) # Depth in feet above ground ∧ Elevation in meters (MSL) Modified	Communities affected
Big Creek	At the confluence with the Pigeon River	+1409	Unincorporated Areas of Haywood County.
	Approximately 120 feet upstream of Mount Sterling Road (State Road 1397).	+1547	
Browning Branch	At the confluence with Richland Creek	+2708	Town of Waynesville, Unincorporated Areas of Haywood County.
	Approximately 650 feet upstream of Browning Branch Road (State Road 1142).	+3054	
Campbell Creek	At the confluence with Jonathan Creek	+3003	Town of Maggie Valley, Unincorporated Areas of Haywood County.
	Approximately 1,000 feet upstream of Campbell Creek Road (State Road 1214).	+3362	
Cataloochee Creek	At the confluence with the Pigeon River	+2272	Unincorporated Areas of Haywood County.
	Approximately 3.5 miles upstream of the confluence with the Pigeon River.	+2458	
Cove Creek (into Fines Creek)	At the confluence with Fines Creek	+2473	Unincorporated Areas of Haywood County.
	Approximately 0.9 mile upstream of the confluence with Fines Creek.	+2576	
Cove Creek (into Jonathan Creek).	At the confluence with Jonathan Creek	+2475	Unincorporated Areas of Haywood County.
	Approximately 100 feet upstream of Sutton Town Road (State Road 1331).	+2654	
Dix Creek	At the confluence with the East Fork Pigeon River	+2700	Unincorporated Areas of Haywood County.
	Approximately 440 feet upstream of Dix Creek Road (State Road 1106).	+3281	
East Fork Pigeon River	At the confluence with the Pigeon River	+2650	Unincorporated Areas of Haywood County.
	Approximately 1.4 miles upstream of Camp Hope Road (State Road 1892).	+3282	
Farmers Branch	At the confluence with Richland Creek	+2671	Town of Waynesville.
	Approximately 860 feet upstream of Hazelwood Avenue	+2729	
Fines Creek	At the confluence with the Pigeon River	+2275	Unincorporated Areas of Haywood County.
	Approximately 1,300 feet upstream of Wayward Cove	+2597	
Hemphill Creek	Approximately 300 feet upstream of the confluence with Jonathan Creek.	+2588	Unincorporated Areas of Haywood County.
	Approximately 100 feet upstream of Hemphill Road (State Road 1313).	+2793	
Hominy Creek	At the Buncombe County boundary	+2250	Town of Canton, Unincorporated Areas of Haywood County.
	Approximately 80 feet upstream of U.S. Route 19	+2407	
Hyatt Creek	At the confluence with Richland Creek	+2758	Town of Waynesville, Unincorporated Areas of Haywood County.
	Approximately 160 feet upstream of Hyatt Creek Road (State Road 1168).	+2857	
Jonathan Creek	At the confluence with the Pigeon River	+2373	Town of Maggie Valley, Unincorporated Areas of Haywood County.
	Approximately 500 feet downstream of Black Camp Gap Road (State Road 1300).	+3512	
Lake Junaluska	Entire shoreline	+2566	Unincorporated Areas of Haywood County.
Little East Fork Pigeon River	Approximately 100 feet upstream of the confluence with the West Fork Pigeon River.	+2835	Unincorporated Areas of Haywood County.
	Approximately 290 feet upstream of Little East Fork Road (State Road 1129).	+3062	
North Hominy Creek	At the confluence with Hominy Creek	+2392	Town of Canton, Unincorporated Areas of Haywood County.
	Approximately 0.3 mile upstream of Peaceful Path	+2709	

Flooding source(s)	Location of referenced elevation	* Elevation in feet (NGVD) + Elevation in feet (NAVD) # Depth in feet above ground ∧ Elevation in meters (MSL) Modified	Communities affected
Pigeon River	At the confluence of Big Creek	+1409	Town of Canton, Town of Clyde, Unincorporated Areas of Haywood County.
	At the confluence of the East Fork Pigeon River and West Fork Pigeon River.	+2650	
Pigeon River Tributary (Waterville Lake).	At the confluence with the Pigeon River	+2595	Town of Canton, Unincorporated Areas of Haywood County.
	Approximately 950 feet upstream of Pruett Ridge	+2676	
Plott Creek	Approximately 200 feet upstream of the confluence with Richland Creek.	+2702	Town of Waynesville, Unincorporated Areas of Haywood County.
	Approximately 650 feet upstream of Serenity Mountain Road.	+3225	
Raccoon Creek	At the confluence with Richland Creek	+2576	Town of Waynesville.
	Approximately 1,040 feet upstream of Test Farm Road (State Road 1810).	+2652	
Richland Creek	At the confluence with the Pigeon River	+2506	Town of Waynesville, Unincorporated Areas of Haywood County.
	Approximately 440 feet upstream of U.S. Route 23	+3057	
Rush Fork	At the confluence with the Pigeon River	+2458	Unincorporated Areas of Haywood County.
	Approximately 1,380 feet upstream of Palmer Pond Road	+2588	
Shallow Flooding Area	Northeast intersection of the railroad and Lea Plant Road	#3	Town of Waynesville.
	Approximately 100 feet northeast of Elysinia Avenue and Hazelwood Avenue intersection.	#3	
Shelton Creek	At the confluence with Richland Creek	+2610	Town of Waynesville.
	Approximately 500 feet upstream of U.S. Route 276	+2660	
Thickety Creek	Approximately 900 feet upstream of the confluence with the Pigeon River.	+2556	Unincorporated Areas of Haywood County.
	Approximately 70 feet upstream of Incinerator Road (State Road 1550).	+2573	
West Fork Pigeon River	At the confluence with the Pigeon River and East Fork Pigeon River.	+2650	Unincorporated Areas of Haywood County.
	Approximately 2.3 miles upstream of Steel Bridge Road (State Road 1216).	+3170	

* National Geodetic Vertical Datum.
+ North American Vertical Datum.
# Depth in feet above ground.
∧ Mean Sea Level, rounded to the nearest 0.1 meter.

ADDRESSES

Town of Canton
Maps are available for inspection at the Town Hall, 58 Park Street, Canton, NC 28716.

Town of Clyde
Maps are available for inspection at the Town Hall, 8437 Carolina Boulevard, Clyde, NC 28721.

Town of Maggie Valley
Maps are available for inspection at the Town Hall, 3987 Soco Road, Maggie Valley, NC 28751.

Town of Waynesville
Maps are available for inspection at the Town Hall, 16 South Main Street, Waynesville, NC 28786.

Unincorporated Areas of Haywood County
Maps are available for inspection at the Haywood County Planning Office, 1233 North Main Street, Waynesville, NC 28786.

Garvin County, Oklahoma, and Incorporated Areas
Docket Nos.: FEMA–B–1045 and FEMA–B–1147

Beef Creek	Approximately 350 feet upstream of the confluence with the Washita River.	+924	Unincorporated Areas of Garvin County.
	Just downstream of East 1520 Road	+956	
Rush Creek	Approximately 0.6 mile downstream of the railroad	+856	Unincorporated Areas of Garvin County.
	Approximately 1.46 miles upstream of I–35	+890	
Washita River	Approximately 1,000 feet upstream of the confluence with Keel Sandy Creek.	+852	Unincorporated Areas of Garvin County.

Flooding source(s)	Location of referenced elevation	* Elevation in feet (NGVD) + Elevation in feet (NAVD) # Depth in feet above ground ∧ Elevation in meters (MSL) Modified	Communities affected
	Approximately 0.84 mile upstream of the confluence with Rounds Creek.	+981	

* National Geodetic Vertical Datum.
+ North American Vertical Datum.
# Depth in feet above ground.
∧ Mean Sea Level, rounded to the nearest 0.1 meter.

ADDRESSES

Unincorporated Areas of Garvin County

Maps are available for inspection at 201 West Grant Avenue, Pauls Valley, OK 73075.

Grady County, Oklahoma, and Incorporated Areas
Docket No.: FEMA–B–1085

Congo Creek	At the confluence with the Washita River	+1078	City of Chickasha, Unincorporated Areas of Grady County.
	Just upstream of Grand Avenue	+1117	
Line Creek	At the confluence with the Washita River	+1085	City of Chickasha, Unincorporated Areas of Grady County.
	Just downstream of U.S. Route 62	+1099	
Line Creek Split	Just upstream of Burlington Northern Railroad	+1093	City of Chickasha, Unincorporated Areas of Grady County.
	At the confluence with Line Creek	+1099	
Washita River	Approximately 1.98 miles downstream of the confluence with the Congo River.	+1078	City of Chickasha, Unincorporated Areas of Grady County.
	Approximately 0.81 mile upstream of N2840	+1095	

* National Geodetic Vertical Datum.
+ North American Vertical Datum.
# Depth in feet above ground.
∧ Mean Sea Level, rounded to the nearest 0.1 meter.

ADDRESSES

City of Chickasha

Maps are available for inspection at City Hall, 101 North 6th Street, Chickasha, OK 73018.

Unincorporated Areas of Grady County

Maps are available for inspection at the Grady County Floodplain Management Board, 315 West Pennsylvania Avenue, Chickasha, OK 73092.

Greer County, Oklahoma, and Incorporated Areas
Docket No.: FEMA–B–1158

Lake Altus	Entire shoreline within community	+1555	Town of Granite, Unincorporated Areas of Greer County.

* National Geodetic Vertical Datum.
+ North American Vertical Datum.
# Depth in feet above ground.
∧ Mean Sea Level, rounded to the nearest 0.1 meter.

ADDRESSES

Town of Granite

Maps are available for inspection at the Town Hall, 420 North Main Street, Granite, OK 73547.

Unincorporated Areas of Greer County

Maps are available for inspection at the Greer County Courthouse, 106 East Jefferson Street, Mangum, OK 73554.

Rogers County, Oklahoma, and Incorporated Areas
Docket Nos.: FEMA–B–1022 and FEMA–B–1089

Elm Creek	Approximately 1,590 feet downstream of the confluence of Pine Valley Tributary and Elm Creek.	+623	City of Owasso, Unincorporated Areas of Rogers County.
	Approximately 1,920 feet upstream of the confluence of Lake Valley Tributary and Elm Creek.	+685	

Flooding source(s)	Location of referenced elevation	* Elevation in feet (NGVD) + Elevation in feet (NAVD) # Depth in feet above ground ∧ Elevation in meters (MSL) Modified	Communities affected
Pine Valley Tributary	Approximately 165 feet upstream of the confluence of Elm Creek and Pine Valley Tributary.	+626	City of Owasso, Unincorporated Areas of Rogers County.
	Approximately 83 feet upstream of East 96th Street North	+679	
Spunky Creek	Approximately 568 feet downstream of I–44	+580	Town of Fair Oaks.
	Approximately 1,036 feet upstream of I–44	+580	
Spunky Creek Tributary	At the confluence with Spunky Creek	+580	Town of Fair Oaks.
	Approximately 866 feet upstream of the confluence with Spunky Creek.	+580	
Verdigris River and flooding effects of the Verdigris River.	Approximately 1,080 feet downstream of the confluence with Unnamed Stream.	+580	Town of Fair Oaks.
	Approximately 621 feet downstream of the confluence with Unnamed Stream.	+580	
Tributary B	At North 145 East Avenue and Tributary B	+630	Unincorporated Areas of Rogers County.
	Approximately 2,750 feet downstream from North 193th East Avenue.	+750	
Tributary F	At the confluence of Tributary F and Elm Creek	+632	Unincorporated Areas of Rogers County.
	Approximately 133 feet downstream of North 161st East Avenue.	+667	
Tributary G	At the confluence of Elm Creek and Tributary G	+648	Unincorporated Areas of Rogers County.
	Approximately 2,581 feet downstream of North 177th East Avenue.	+686	
Tributary G–1	At the confluence of Tributary G and Tributary G–1	+663	Unincorporated Areas of Rogers County.
	Approximately 1,643 feet downstream of North 177th East Avenue.	+688	
Tributary H	At the confluence of Tributary H and Elm Creek	+647	Unincorporated Areas of Rogers County.
	Approximately 158 feet upstream of East 116th Street North.	+699	

* National Geodetic Vertical Datum.
+ North American Vertical Datum.
# Depth in feet above ground.
∧ Mean Sea Level, rounded to the nearest 0.1 meter.

ADDRESSES

Town of Fair Oaks
Maps are available for inspection at 219 South Missouri Street, Claremore, OK 74017.

City of Owasso
Maps are available for inspection at 301 West 2nd Avenue, Owasso, OK 74055.

Unincorporated Areas of Rogers County
Maps are available for inspection at 219 South Missouri Street, Claremore, OK 74017.

Washita County, Oklahoma, and Incorporated Areas
Docket No.: FEMA–B–1158

Cobb Creek	Approximately 0.9 mile downstream of Seger Street	+1449	Cheyenne and Arapaho Tribes of Oklahoma, Unincorporated Areas of Washita County.
	Approximately 250 feet upstream of North 2420 Road	+1470	
North Cavalry Creek	Approximately 100 feet downstream of East 1210 Road	+1470	Unincorporated Areas of Washita County.
	Approximately 675 feet upstream of North 2230 Road	+1574	
Tributary No. 1 of North Cavalry Creek.	At the confluence with North Cavalry Creek	+1487	Unincorporated Areas of Washita County.
	Approximately 550 feet downstream of Cavalry Creek Dam 24.	+1566	
Tributary No. 1 of Tributary No. 1 of North Cavalry Creek.	Approximately 1,000 feet upstream of the confluence with Tributary No. 1 of North Cavalry Creek.	+1535	Unincorporated Areas of Washita County.
	Approximately 850 feet upstream of East 14th Street	+1562	

* National Geodetic Vertical Datum.

Flooding source(s)	Location of referenced elevation	* Elevation in feet (NGVD) + Elevation in feet (NAVD) # Depth in feet above ground ∧ Elevation in meters (MSL) Modified	Communities affected

+ North American Vertical Datum.
# Depth in feet above ground.
∧ Mean Sea Level, rounded to the nearest 0.1 meter.

ADDRESSES

Cheyenne and Arapaho Tribes of Oklahoma

Maps are available for inspection at the Cheyenne and Arapaho Tribes of Oklahoma Executive Office, 100 Red Moon Circle, Concho, OK 73022.

Unincorporated Areas of Washita County

Maps are available for inspection at the Washita County Courthouse, 111 East Main Street, New Cordell, OK 73632.

Indiana County, Pennsylvania (All Jurisdictions)
Docket No.: FEMA–B–1130

Conemaugh River	Approximately 1.74 miles downstream of Front Street	+996	Township of Burrell.
	Approximately 1.7 miles downstream of Front Street	+997	
Crooked Creek	Approximately 1,700 feet upstream of Fulton Run Road	+1025	Township of White.
	Approximately 0.56 mile upstream of Fulton Run Road	+1026	
Dixon Run	Approximately 1,051 feet downstream of Brocious Road	+1317	Township of Rayne.
	Approximately 355 feet downstream of Brocious Road	+1321	
Two Lick Creek	Approximately 0.85 mile downstream of Franklin Street	+1208	Township of Cherryhill.
	Approximately 630 feet upstream of the confluence with Buck Run.	+1228	
Whites Run	Approximately 435 feet upstream of Chestnut Street	+1278	Township of White.
	Approximately 495 feet upstream of Chestnut Street	+1278	

* National Geodetic Vertical Datum.
+ North American Vertical Datum.
# Depth in feet above ground.
∧ Mean Sea Level, rounded to the nearest 0.1 meter.

ADDRESSES

Township of Burrell

Maps are available for inspection at the Burrell Township Building, 321 Park Drive, Black Lick, PA 15716.

Township of Cherryhill

Maps are available for inspection at the Cherryhill Township Building, 184 Spaulding Road, Penn Run, PA 15765.

Township of Rayne

Maps are available for inspection at the Rayne Township Building, 140 Tanoma Road, Home, PA 15747.

Township of White

Maps are available for inspection at the White Township Building, 1412 Park Drive, Clarksburg, PA 15725.

Cass County, Texas, and Incorporated Areas
Docket No.: FEMA–B–1114

Black Bayou	Just upstream of FM 251	+227	Unincorporated Areas of Cass County.
	Approximately 1 mile upstream of U.S. Route 59	+237	
Hurricane Creek	Approximately 250 feet upstream of East Pinecrest Drive	+237	Unincorporated Areas of Cass County.
	Just downstream of North Holly Street	+269	
South Tributary to Black Bayou	At the confluence with Black Bayou	+228	Unincorporated Areas of Cass County.
	Approximately 800 feet downstream of Salmon Road	+239	

* National Geodetic Vertical Datum.
+ North American Vertical Datum.
# Depth in feet above ground.
∧ Mean Sea Level, rounded to the nearest 0.1 meter.

ADDRESSES

Unincorporated Areas of Cass County

Maps are available for inspection at the Cass County Courthouse, 604 State Highway 8 North, Linden, TX 75563.

Flooding source(s)	Location of referenced elevation	* Elevation in feet (NGVD) + Elevation in feet (NAVD) # Depth in feet above ground ∧ Elevation in meters (MSL) Modified	Communities affected
Medina County, Texas, and Incorporated Areas Docket No.: FEMA–B–1065			
Burnt Boot Creek	Approximately 1,570 feet downstream of the intersection of Thompson Avenue.	+634	City of Devine, Unincorporated Areas of Medina County.
	Approximately 0.54 mile upstream of the intersection of RM 92.	+700	
Chacon Creek	Approximately 1.46 miles downstream of the intersection of Highway 81.	+660	City of Natalia, Unincorporated Areas of Medina County.
	Approximately 698 feet upstream of the intersection of RM 139.	+717	
East Branch of Live Oak Creek	Approximately 2.28 miles downstream of the intersection of U.S. Route 90.	+847	City of Hondo, Unincorporated Areas of Medina County.
	Approximately 2.02 miles upstream of the intersection of U.S. Route 90.	+913	
Elm Slough	Approximately 1.13 miles downstream of CR 446	+803	City of Hondo, Unincorporated Areas of Medina County.
	Approximately 1,987 feet upstream of CR 443	+888	
Flat Creek	Approximately 2.4 miles downstream of the intersection of U.S. Route 90.	+720	City of Castroville, Unincorporated Areas of Medina County.
	Approximately 1.7 miles upstream of the intersection of U.S. Route 90.	+784	
Fort Ewell Creek	Just upstream of the confluence of Chacon Creek	+694	City of Natalia, Unincorporated Areas of Medina County.
	Just downstream of the intersection of RM 136	+701	
Hondo Creek	Approximately 0.5 mile downstream of CR 4526	+839	Unincorporated Areas of Medina County.
	Approximately 1.29 miles upstream of Vandenburg Road	+917	
Hondo Creek Tributary	Approximately 873 feet downstream of State Highway 173	+862	Unincorporated Areas of Medina County.
	Approximately 0.62 mile upstream of State Highway 173	+878	
Kempf Creek	Just upstream of the confluence of the Medina River	+758	City of Castroville, Unincorporated Areas of Medina County.
	Approximately 215 feet downstream of the intersection of FM 471.	+778	
Little Live Oak Creek and flooding effects.	Approximately 1.41 miles downstream of intersection of CR 532.	+812	City of Hondo, Unincorporated Areas of Medina County.
	Approximately 1,011 feet upstream of 19th Street	+897	
Little Sous Creek	Approximately 4,009 feet downstream of the intersection of U.S. Route 90.	+737	Unincorporated Areas of Medina County.
	Approximately 2.2 miles upstream of the intersection of U.S. Route 90.	+827	
Medina River	Approximately 0.6 mile downstream of the intersection of Lacoste Road.	+689	City of Castroville, Unincorporated Areas of Medina County.
	Approximately 1.8 miles upstream of the confluence of Kempf Creek.	+767	
Parkers Creek	Approximately 2.71 miles downstream of the intersection of FM 2200.	+826	Unincorporated Areas of Medina County.
	Approximately 1.61 miles upstream of the intersection of U.S. Route 90.	+914	
Polecat Creek	Approximately 0.55 mile downstream of the intersection of Dhanis Street.	+708	City of Lacoste, Unincorporated Areas of Medina County.
	Approximately 503 feet upstream of the intersection of FM 471.	+722	
San Fransisco Perez Creek	Approximately 0.49 mile downstream of the intersection of RM 101.	+646	City of Devine, Unincorporated Areas of Medina County.

Flooding source(s)	Location of referenced elevation	* Elevation in feet (NGVD) + Elevation in feet (NAVD) # Depth in feet above ground ∧ Elevation in meters (MSL) Modified	Communities affected
	Approximately 1.1 miles upstream of the intersection of RM 90.	+699	
Seco Creek	Approximately 5.94 miles downstream of the intersection of CR 512.	+838	Unincorporated Areas of Medina County.
	Approximately 4.1 miles upstream of the intersection of CR 428.	+935	
South Fork San Geronimo Creek.	Approximately 786 feet downstream of the confluence of Unnamed Tributary 1 of South Fork San Geronimo Creek.	+1324	Unincorporated Areas of Medina County.
	Approximately 947 feet upstream of the confluence of Unnamed Tributary 2 of South Fork San Geronimo Creek.	+1407	
South Polecat Creek	Approximately 0.42 mile downstream of the intersection of Dhanis Street.	+708	City of Lacoste, Unincorporated Areas of Medina County.
	Approximately 0.44 mile upstream of the intersection of Contis Avenue.	+730	
Tehuacana Creek	Approximately 1.24 miles downstream of the confluence of East Tehuacana Creek.	+623	Unincorporated Areas of Medina County.
	Just downstream of the confluence of West Fork Tehuacana Creek.	+660	
Unnamed Tributary 1 to San Geronimo Creek.	Approximately 1.4 miles upstream of the confluence of San Geronimo Creek.	+1360	Unincorporated Areas of Medina County.
	Approximately 2.6 miles upstream of the confluence of San Geronimo Creek.	+1465	
Unnamed Tributary 1 to Southfork of San Geronimo Creek.	Just upstream of the confluence of South Fork San Geronimo Creek.	+1345	Unincorporated Areas of Medina County.
	Approximately 1,844 feet upstream of the confluence of South Fork San Geronimo Creek.	+1371	
Unnamed Tributary 2 of South Fork San Geronimo Creek.	Just upstream of the confluence of South Fork San Geronimo Creek.	+1401	Unincorporated Areas of Medina County.
	Approximately 1,069 feet upstream of the confluence of South Fork San Geronimo Creek.	+1412	
Unnamed Tributary 2 to San Geronimo Creek.	Approximately 779 feet upstream of the intersection of RT 37.	+1295	Unincorporated Areas of Medina County.
	Approximately 0.65 mile upstream of the intersection of RT 37.	+1339	
Unnamed Tributary to Medina Diversion Reservoir.	Approximately 1,514 feet downstream of the confluence of Unnamed Tributary to Unnamed Tributary to Medina Diversion Reservoir.	+1159	Unincorporated Areas of Medina County.
	Approximately 1.4 miles upstream of the confluence of Unnamed Tributary to Unnamed Tributary to Medina Diversion Reservoir.	+1242	
Unnamed Tributary to Unnamed Tributary to Medina Diversion Reservoir.	Just upstream of the confluence of Unnamed Tributary to Medina Diversion Reservoir.	+1173	Unincorporated Areas of Medina County.
	Approximately 0.8 mile upstream of the confluence of Unnamed Tributary to Medina Diversion Reservoir.	+1264	
West Branch Little Live Oak Creek.	Approximately 0.57 mile downstream of the intersection of CR 532.	+832	City of Hondo, Unincorporated Areas of Medina County.
	Approximately 0.39 mile upstream of the intersection of CR 530.	+885	
West Fork Tehuacana Tributary	Just upstream of the confluence of West Fork Tehuacana Creek.	+668	Unincorporated Areas of Medina County.
	Approximately 0.62 mile upstream of CR 732	+699	
West Prong Atascosa River	Approximately 295 feet downstream of the intersection of Main Street.	+693	City of Lytle, Unincorporated Areas of Medina County.
	Just downstream of the intersection of CR 681	+715	
West Tehuacana Creek	Just upstream of the confluence of Tehuacana Creek	+662	Unincorporated Areas of Medina County.
	Approximately 1,258 feet upstream of the intersection of CR 732.	+707	

* National Geodetic Vertical Datum.
+ North American Vertical Datum.
# Depth in feet above ground.

Flooding source(s)	Location of referenced elevation	* Elevation in feet (NGVD) + Elevation in feet (NAVD) # Depth in feet above ground ∧ Elevation in meters (MSL) Modified	Communities affected

∧ Mean Sea Level, rounded to the nearest 0.1 meter.

ADDRESSES

City of Castroville
Maps are available for inspection at 703 Paris Street, Castroville, TX 78009.

City of Devine
Maps are available for inspection at 303 South Teel Drive, Devine, TX 78016.

City of Hondo
Maps are available for inspection at 1600 Avenue M, Hondo, TX 78861.

City of Lacoste
Maps are available for inspection at 16004 South Front Street, LaCoste, TX 78039.

City of Lytle
Maps are available for inspection at 19325 FM 2790, Lytle, TX 78052.

City of Natalia
Maps are available for inspection at 300 3rd Street, Natalia, TX 78059.

Unincorporated Areas of Medina County
Maps are available for inspection at 709 Avenue Y, Hondo, TX 78861.

(Catalog of Federal Domestic Assistance No. 97.022, ''Flood Insurance.'')

Dated: March 21, 2012.

Sandra K. Knight,

Deputy Associate Administrator for Mitigation, Department of Homeland Security, Federal Emergency Management Agency.

[FR Doc. 2012–7688 Filed 3–29–12; 8:45 am]

BILLING CODE 9110–12–P

FEDERAL COMMUNICATIONS COMMISSION

47 CFR Part 54

[WC Docket Nos. 11–42, 03–109, 12–23 and CC Docket No. 96–45; FCC 12–11]

Lifeline and Link Up Reform and Modernization, Advancing Broadband Availability Through Digital Literacy Training

AGENCY: Federal Communications Commission.

ACTION: Final rule; correction.

SUMMARY: This document corrects errors in the **DATES** section of a **Federal Register** document (77 FR 12952, March 2, 2012) regarding the Federal Communications Commission comprehensively reforming and beginning to modernize the Universal Service Fund's Lifeline program. The reforms adopted will substantially strengthen protections against waste, fraud, and abuse; improve program administration and accountability; improve enrollment and consumer disclosures; initiate modernization of the program for broadband; and constrain the growth of the program in order to reduce the burden on all who contribute to the Universal Service Fund. This document also contains corrections to the paragraph numbering of final rule regulations in part 54.

DATES: Effective March 30, 2012.

FOR FURTHER INFORMATION CONTACT: Kimberly Scardino, Wireline Competition Bureau, (202) 418–7400 or TTY: (202) 418–0484.

SUPPLEMENTARY INFORMATION: This summary contains corrections to the **DATES** section of a **Federal Register** document, 77 FR 12952, March 2, 2012. This document also contains corrections to the final rule regulations in part 54. The full text of the Commission's Report and Order in WC Docket Nos. 11–42, 03–109, 12–23 and CC Docket No. 96–45; FCC 12–11 released on February 6, 2012 is available for public inspection during regular business hours in the FCC Reference Center, Room CY–A257, 445 12th Street SW., Washington, DC 20554. Or at the following Internet address: *http://transition.fcc.gov/Daily_Releases/Daily_Business/2012/db0207/FCC-12-11A1.doc.*

1. *Background.* Part 54 rules are issued pursuant to the Communications Act of 1934, as amended. The purpose of the part 54 rules is to implement section 254 of the Communications Act of 1934, as amended. 47 U.S.C. 254. This action corrects the final regulation implemented at § 54.410 of the Commission's rules. 47 CFR 54.410. Specifically, this action corrects the numbering of paragraphs (d)(3)(iii) through (d)(3)(ix).

2. *Need for Correction.* The **Federal Register** Summary published at 77 FR 12952, March 2, 2012 listed paragraph (d)(3)(ii) in § 54.410 twice. This document corrects the paragraph numbering.

[CORRECTION]

In rule FR Doc. 2012–4978 published at 77 FR 12952, March 2, 2012 make the following corrections.

■ 1. On page 12952, in the first column, in the **DATES** section, remove ''§ 54.401(c)'' and add in its place ''§ 54.401(d)''.

■ 2. On page 12952, in the first column, in the **DATES** section, remove ''§ 54.222'' and add in its place ''§ 54.422''.

■ 3. On page 12952, in the first column, in the **DATES** section, add ''§ 54.405(c),'' after ''§ 54.403,''.

■ 4. On page 12952, in the first column, in the **DATES** section, add ''and § 54.410'' after ''§ 54.409.''

§ 54.410 [Corrected]

■ 5. In § 54.410 (d)(3) on page 12972, in the first column, paragraphs (d)(3)(iii) through (d)(3)(viii) are redesignated as (d)(3)(iv) through (d)(3)(ix); and the second paragraph (d)(3)(ii) is redesignated as (d)(3)(iii).

Federal Communications Commission.

Bulah P. Wheeler,

Deputy Manager.

[FR Doc. 2012–7747 Filed 3–29–12; 8:45 am]

BILLING CODE 6712–01–P

DEPARTMENT OF DEFENSE

Defense Acquisition Regulations System

48 CFR Part 201

RIN 0750–AH66

Defense Federal Acquisition Regulation Supplement: New Threshold for Peer Reviews of Noncompetitive Contracts (DFARS Case 2012–D018)

AGENCY: Defense Acquisition Regulations System, Department of Defense (DoD).

ACTION: Final rule.

SUMMARY: DoD is issuing a final rule amending the Defense Federal Acquisition Regulation Supplement (DFARS) to modify the threshold for noncompetitive contract peer reviews.

DATES: *Effective Date:* April 30, 2012.

FOR FURTHER INFORMATION CONTACT: Mr. Manuel Quinones, telephone 571–372–6088.

SUPPLEMENTARY INFORMATION:

I. Background

This final rule reduces the threshold for DoD peer reviews of noncompetitive contracts from the current level of $1 billion to $500 million. Previously, DoD published a final rule in the **Federal Register** at 74 FR 37625 on July 29, 2009, to address the requirements for peer reviews of DoD solicitations and contracts. DFARS Case 2008–D035, entitled ''Peer Reviews of Contracts,'' added DFARS 201.170, Peer Reviews, which (1) specified that the Office of the Director, Defense Procurement and Acquisition Policy, will organize teams of reviewers and will facilitate peer reviews for all solicitations and contracts for services valued at $1 billion or more, and (2) required the military departments, defense agencies, and DoD field activities to establish procedures for preaward and postaward peer review of solicitations and contracts for services valued at less than $1 billion.

This final rule—

- Clarifies DoD peer review phases and revises the threshold for peer reviews of noncompetitive procurements;
- Requires military departments and defense agencies to establish procedures for preaward peer reviews for noncompetitive procurements valued at less than $500 million; and
- Adds an email address for the submission of rolling annual forecasts of acquisitions.

II. Publication of This Final Rule for Public Comment Is Not Required by Statute

''Publication of proposed regulations'', 41 U.S.C. 1707, is the statute which applies to the publication of the Federal Acquisition Regulation. Paragraph (a)(1) of the statute requires that a procurement policy, regulation, procedure or form (including an amendment or modification thereof) must be published for public comment if it relates to the expenditure of appropriated funds, and has either a significant effect beyond the internal operating procedures of the agency issuing the policy, regulation, procedure or form, or has a significant cost or administrative impact on contractors or offerors. This final rule is not required to be published for public comment, because this rule concerns DoD's internal review processes and does not have a significant cost or administrative impact on contractors or offerors. These requirements affect only the internal operating procedures of the Government.

III. Executive Orders 12866 and 13563

Executive Orders (E.O.s) 12866 and 13563 direct agencies to assess all costs and benefits of available regulatory alternatives and, if regulation is necessary, to select regulatory approaches that maximize net benefits (including potential economic, environmental, public health and safety effects, distributive impacts, and equity). E.O. 13563 emphasizes the importance of quantifying both costs and benefits, of reducing costs, of harmonizing rules, and of promoting flexibility. This is not a significant regulatory action and, therefore, was not subject to review under section 6(b) of E.O. 12866, Regulatory Planning and Review, dated September 30, 1993. This rule is not a major rule under 5 U.S.C. 804.

IV. Regulatory Flexibility Act

The Regulatory Flexibility Act does not apply to this rule because this final rule does not constitute a significant DFARS revision within the meaning of FAR 1.501–1, and 41 U.S.C. 1707 does not require publication for public comment.

V. Paperwork Reduction Act

The rule does not contain any information collection requirements that require the approval of the Office of Management and Budget under the Paperwork Reduction Act (44 U.S.C. chapter 35).

List of Subjects in 48 CFR Part 201

Government procurement.

Mary Overstreet,
Editor, Defense Acquisition Regulations System.

Therefore, 48 CFR part 201 is amended as follows:

PART 201—FEDERAL ACQUISITION REGULATIONS SYSTEM

■ 1. The authority citation for 48 CFR part 201 is revised to read as follows:

Authority: 41 U.S.C. 1303 and 48 CFR chapter 1.

■ 2. Section 201.170 is revised to read as follows:

201.170 Peer reviews.

(a) *DoD peer reviews.* (1) The Office of the Director, Defense Procurement and Acquisition Policy, will organize teams of reviewers and facilitate peer reviews for solicitations and contracts, as follows using the procedures at PGI 201.170—

(i) Preaward peer reviews for competitive procurements will be conducted in three phases for all solicitations valued at $1 billion or more;

(ii) Preaward peer reviews for noncompetitive procurements will be conducted in two phases for new contract actions valued at $500 million or more; and

(iii) Postaward peer reviews will be conducted for all contracts for services valued at $1 billion or more.

(2) To facilitate planning for peer reviews, the military departments and defense agencies shall provide a rolling annual forecast of acquisitions at the end of each quarter (i.e., March 31; June 30; September 30; December 31), to the Deputy Director, Defense Procurement and Acquisition Policy (Contract Policy and International Contracting) via email to *peerreviews@osd.mil.*

(b) *Component peer reviews.* The military departments and defense agencies shall establish procedures for—

(1) Preaward peer reviews of solicitations for competitive procurements valued at less than $1 billion;

(2) Preaward peer reviews for noncompetitive procurements valued at less than $500 million; and

(3) Postaward peer reviews of all contracts for services valued at less than $1 billion.

[FR Doc. 2012–7557 Filed 3–29–12; 8:45 am]

BILLING CODE 5001–06–P

DEPARTMENT OF DEFENSE

Defense Acquisition Regulations System

48 CFR Parts 201 and 212

RIN 0750–AH65

Defense Federal Acquisition Regulation Supplement; Inflation Adjustment of Threshold for Acquisition of Right-Hand Drive Passenger Sedans (DFARS Case 2012–D016)

AGENCY: Defense Acquisition Regulations System, Department of Defense (DoD).

ACTION: Interim rule.

SUMMARY: DoD is issuing an interim rule amending the Defense Federal Acquisition Regulation Supplement (DFARS) to implement a section of the National Defense Authorization Act for Fiscal Year 2012 that requires that the statutory limitation on the acquisition of right-hand drive passenger sedans be included on the list of dollar thresholds subject to inflation adjustment.

DATES: *Effective Date:* March 30, 2012.

Comment Date: Comments on the interim rule should be submitted in writing to the address shown below on or before May 29, 2012, to be considered in the formation of a final rule.

ADDRESSES: Submit comments identified by DFARS Case 2012–D016, using any of the following methods:

○ *Regulations.gov: http://www.regulations.gov.* Submit comments via the Federal eRulemaking portal by entering ''DFARS Case 2012–D016'' under the heading ''Enter keyword or ID'' and selecting ''Search.'' Select the link ''Submit a Comment'' that corresponds with ''DFARS Case 2012–D016.'' Follow the instructions provided at the ''Submit a Comment'' screen. Please include your name, company name (if any), and ''DFARS Case 2012–D016'' on your attached document.

○ *Email: dfars@osd.mil.* Include DFARS Case 2012–D016 in the subject line of the message.

○ *Fax:* 571–372–6094.

○ *Mail:* Defense Acquisition Regulations System, Attn: Dr. Laura Welsh, OUSD(AT&L)DPAP/DARS, Room 3B855, 3060 Defense Pentagon, Washington, DC 20301–3060.

Comments received generally will be posted without change to *http://www.regulations.gov,* including any personal information provided. To confirm receipt of your comment(s), please check *www.regulations.gov,* approximately two to three days after submission to verify posting (except allow 30 days for posting of comments submitted by mail).

FOR FURTHER INFORMATION CONTACT: Dr. Laura Welsh, telephone 571–372–6091.

SUPPLEMENTARY INFORMATION:

I. Background

This interim rule revises the DFARS to implement section 814(b) of the National Defense Authorization Act for Fiscal Year 2012 (Pub. L. 112–81). Section 814(b) requires that the dollar limitation established in 10 U.S.C. 2253(a)(2) for the acquisition of right-hand drive passenger sedans be included on the list of dollar thresholds subject to inflation adjustment in accordance with the requirements of 41 U.S.C. 1908, and to adjust the threshold, as appropriate. 10 U.S.C. 2253(a)(2) is based on section 101(b) of the Fiscal Year 1986 Department of Defense Appropriations Act (Pub. L. 99–190). The threshold was previously amended from $12,000 per vehicle to $30,000 per vehicle in 1997 through section 805 of the Fiscal Year 1998 Department of Defense Appropriations Act (Pub. L. 105–85), enacted on November 18, 1997.

II. Discussion and Analysis

This interim rule revises the DFARS to implement section 814(b) of the National Defense Authorization Act for Fiscal Year 2012 (Pub. L. 112–81) as follows:

- Adds DFARS 201.109(a) to include the dollar limitation for the acquisition of right-hand drive passenger sedans in the list of statutory acquisition-related dollar thresholds to be adjusted for inflation.
- Adds DFARS 212.271 to provide the escalated threshold of $40,000 per vehicle when acquiring right-hand drive passenger sedans.

III. Executive Orders 12866 and 13563

Executive Orders (E.O.s) 12866 and 13563 direct agencies to assess all costs and benefits of available regulatory alternatives and, if regulation is necessary, to select regulatory approaches that maximize net benefits (including potential economic, environmental, public health and safety effects, distributive impacts, and equity). E.O. 13563 emphasizes the importance of quantifying both costs and benefits, of reducing costs, of harmonizing rules, and of promoting flexibility. This is not a significant regulatory action and, therefore, was not subject to review under section 6(b) of E.O. 12866, Regulatory Planning and Review, dated September 30, 1993. This rule is not a major rule under 5 U.S.C. 804.

IV. Regulatory Flexibility Act

DoD does not expect this rule to have a significant economic impact on a substantial number of small entities within the meaning of the Regulatory Flexibility Act, 5 U.S.C. 601, *et seq.,* because it merely adjusts upward the current limitation for acquisition of right-hand drive passenger vehicles from $30,000 to $40,000 due to inflation. Therefore, an initial regulatory flexibility analysis has not been performed. DoD invites comments from small business concerns and other interested parties on the expected impact of this rule on small entities.

DoD will also consider comments from small entities concerning the existing regulations in subparts affected by this rule in accordance with 5 U.S.C. 610. Interested parties must submit such comments separately and should cite 5 U.S.C. 610 (DFARS Case 2012–D016), in correspondence.

V. Paperwork Reduction Act

The rule does not contain any information collection requirements that require the approval of the Office of Management and Budget under the Paperwork Reduction Act (44 U.S.C. chapter 35).

VI. Determination To Issue an Interim Rule

A determination has been made under the authority of the Secretary of Defense that urgent and compelling reasons exist to promulgate this interim rule without prior opportunity for public comment. This action is necessary because it implements section 814(b) of the National Defense Authorization Act for Fiscal Year 2012 (Pub. L. 112–81), enacted on December 31, 2011. Section 814(b) requires escalating the current threshold for acquisition of right-hand drive passenger sedans from $30,000 to $40,000. Pursuant to paragraph (d) of 41 U.S.C. 1908, revised thresholds take effect on the date of publication in the **Federal Register**. The threshold was last amended from $12,000 per vehicle to $30,000 per vehicle in 1997 through section 805 of the National Defense Authorization Act for Fiscal Year 1998 (Pub. L. 105–85), enacted on November 18, 1997. Delaying implementation of the threshold adjustment may negatively impact contracting officers and the defense customers they support who require right-hand drive passenger sedans by restricting the purchase authority to the 1997 cost limitation of $30,000, without providing for adjustment due to inflation. Transportation of personnel in right-hand drive passenger sedans is needed

overseas for reasons of safety and security and will allow personnel to move to work locations necessary to achieve the mission of the United States military worldwide, including support of overseas contingency operations. However, pursuant to 41 U.S.C. 1707 and FAR 1.501–3(b), DoD will consider public comments received in response to this interim rule in the formation of the final rule.

List of Subjects in 48 CFR Parts 201 and 212

Government procurement.

Ynette R. Shelkin,

Editor, Defense Acquisition Regulations System.

Therefore, 48 CFR parts 201 and 212 are amended as follows:

PART 201—FEDERAL ACQUISITION REGULATIONS SYSTEM

■ 1. The authority citation for 48 CFR part 201 is revised to read as follows:

Authority: 41 U.S.C. 1303 and CFR chapter 2.

■ 2. Section 201.109 is amended to add paragraph (a) to read as follows:

201.109 Statutory acquisition-related dollar thresholds-adjustment for inflation.

(a) Section 814(b) of the National Defense Authorization Act for Fiscal Year 2012 (Pub. L. 112–81) requires that the threshold established in 10 U.S.C. 2253(a)(2) for the acquisition of right-hand drive passenger sedans be included in the list of dollar thresholds that are subject to adjustment for inflation in accordance with the requirements of 41 U.S.C. 1908, and is adjusted pursuant to such provisions, as appropriate.

* * * * *

PART 212— ACQUISITION OF COMMERCIAL ITEMS

■ 3. The authority citation for 48 CFR part 212 continues to read as follows:

Authority: 41 U.S.C. 1303 and CFR chapter 2.

■ 4. Section 212.271 is added to subpart 212.2 to read as follows:

212.271 Limitation on acquisition of right-hand drive passenger sedans.

10 U.S.C. 2253(a)(2) limits the authority to purchase right-hand drive passenger sedans to a cost of not more than $40,000 per vehicle.

[FR Doc. 2012–7493 Filed 3–29–12; 8:45 am]

BILLING CODE 5001–06–P

DEPARTMENT OF DEFENSE

Defense Acquisition Regulations System

48 CFR Part 203

Defense Federal Acquisition Regulation Supplement; Technical Amendment

AGENCY: Defense Acquisition Regulations System, Department of Defense (DoD).

ACTION: Final rule.

SUMMARY: DoD is making a technical amendment to the Defense Federal Acquisition Regulation Supplement (DFARS) to add a reference for reporting suspected lobbying violations.

DATES: *Effective Date:* March 30, 2012.

FOR FURTHER INFORMATION CONTACT: Ms. Ynette R. Shelkin, Defense Acquisition Regulations System, OUSD (AT&L) DPAP (DARS), Room 3B855, 3060 Defense Pentagon, Washington, DC 20301–3060. Telephone 571–372–6089; facsimile 571–372–6101.

SUPPLEMENTARY INFORMATION: This final rule amends the DFARS by adding text at 203.806 to provide guidance to explain how and where to report violations or potential violations of the Lobbying Disclosure Act (31 U.S.C. 1352).

List of Subjects in 48 CFR Part 203

Government procurement.

Ynette R. Shelkin,

Editor, Defense Acquisition Regulations System.

Therefore, 48 CFR part 203 is amended as follows:

PART 203—IMPROPER BUSINESS PRACTICES AND PERSONAL CONFLICTS OF INTEREST

■ 1. The authority citation for 48 CFR part 203 is revised to read as follows:

Authority: 41 U.S.C. 1303 and 48 CFR chapter 2.

■ 2. Add subpart 203.8 consisting of section 203.806 to read as follows:

Subpart 203.8—Limitations on the Payment of Funds To Influence Federal Transactions

203.806 Processing suspected violations.

Report suspected violations to the address at PGI 203.8(a).

[FR Doc. 2012–7439 Filed 3–29–12; 8:45 am]

BILLING CODE 5001–06–P

DEPARTMENT OF DEFENSE

Defense Acquisition Regulations System

48 CFR Parts 204, 209, 216, 229, and 252

RIN 0750–AH38

Defense Federal Acquisition Regulation Supplement: Separation of Combined Provisions and Clauses (DFARS Case 2011–D048)

AGENCY: Defense Acquisition Regulations System, Department of Defense (DoD).

ACTION: Final rule.

SUMMARY: DoD is issuing a final rule amending the Defense Federal Acquisition Regulation Supplement (DFARS) to separate provisions and clauses that are currently combined in order to be in compliance with DFARS drafting conventions.

DATES: *Effective Date:* March 30, 2012.

FOR FURTHER INFORMATION CONTACT: Amy G. Williams, telephone 571–372–6106.

SUPPLEMENTARY INFORMATION:

I. Background

DoD published a proposed rule in the **Federal Register** at 76 FR 71922 on November 21, 2011, to separate provisions and clauses that are currently combined in order to comply with DFARS drafting conventions. A provision is included only in the solicitation, and generally includes representations and certifications, to which the offeror responds in its offer. A contract clause is included in both the solicitation and the resultant contract, and provides the terms that apply throughout contract performance. It is inconsistent with DFARS drafting conventions to combine a provision and a clause in a single clause. This rule removes the representations from the following five DFARS clauses and creates five new provisions to be used in solicitations that include the associated clauses:

From DFARS clause	To new provision
252.209–7005, Reserve Officer Training Corps and Military Recruiting on Campus.	252.209–7003, Reserve Officer Training Corps and Military Recruiting on Campus—Representation.
252.216–7000, Economic Price Adjustment—Basic Steel, Aluminum, Brass, Bronze, or Copper Mill Products.	252.216–7007, Economic Price Adjustment—Basic Steel, Aluminum, Brass, Bronze, or Copper Mill Products—Representation.
252.216–7003, Economic Price Adjustment—Wage Rates or Material Prices Controlled by a Foreign Government.	252.216–7008, Economic Price Adjustment—Wage Rates or Material Prices Controlled by a Foreign Government—Representation.
252.229–7003, Tax Exemptions (Italy)	252.229–7012, Tax Exemptions (Italy)—Representation.
252.229–7005, Tax Exemptions (Spain)	252.229–7013, Tax Exemptions (Spain)—Representation.

Conforming changes are also required to DFARS 252.204–7007, Alternate A, Annual Representations and Certifications, and the associated prescriptions at DFARS 204.1202(2) to list the new provisions in lieu of the current DFARS clauses.

II. Discussion and Analysis of the Public Comments

There were no public responses submitted that pertained to the proposed rule. Minor changes made to the proposed rule include adding new clause numbers and dates, edits to section titles as required to reflect the addition of new provisions, and minor editorial and grammatical changes to paragraph (a) of 252.229–7005, Tax Exemptions (Spain).

III. Executive Orders 12866 and 13563

Executive Orders (E.O.s) 12866 and 13563 direct agencies to assess all costs and benefits of available regulatory alternatives and, if regulation is necessary, to select regulatory approaches that maximize net benefits (including potential economic, environmental, public health and safety effects, distributive impacts, and equity). E.O. 13563 emphasizes the importance of quantifying both costs and benefits, of reducing costs, of harmonizing rules, and of promoting flexibility. This is not a significant regulatory action and, therefore, was not subject to review under section 6(b) of E.O. 12866, Regulatory Planning and Review, dated September 30, 1993. This rule is not a major rule under 5 U.S.C. 804.

IV. Regulatory Flexibility Act

DoD certifies that this final rule will not have a significant economic impact on a substantial number of small entities within the meaning of the Regulatory Flexibility Act, 5 U.S.C. 601, *et seq.,* because it does not add any new requirements—it only reformats existing requirements of five clauses into separate provisions and clauses.

V. Paperwork Reduction Act

The rule does not contain any information collection requirements that require the approval of the Office of Management and Budget under the Paperwork Reduction Act (44 U.S.C. chapter 35).

List of Subjects in 48 CFR Parts 204, 209, 216, 229, and 252

Government procurement.

Mary Overstreet,
Editor, Defense Acquisition Regulations System.

Therefore, 48 CFR parts 204, 209, 216, 229, and 252 are amended as follows:

■ 1. The authority citation for 48 CFR parts 204, 209, 216, and 229 is revised to read as follows:

Authority: 41 U.S.C. 1303 and 48 CFR chapter 1.

PART 204—ADMINISTRATIVE MATTERS

■ 2. Amend section 204.1202 by revising paragraphs (2)(ii), (iii), (iv), (xi), and (xii) to read as follows:

204.1202 Solicitation provision.

* * * * *

(2) * * *

(ii) 252.209–7002, Disclosure of Ownership or Control by a Foreign Government.

(iii) 252.209–7003, Reserve Officer Training Corps and Military Recruiting on Campus—Representation.

(iv) 252.216–7008, Economic Price Adjustment—Wage Rates or Material Prices Controlled by a Foreign Government—Representation.

* * * * *

(xi) 252.229–7012, Tax Exemptions (Italy)—Representation.

(xii) 252.229–7013, Tax Exemptions (Spain)—Representation.

PART 209—CONTRACTOR QUALIFICATIONS

■ 3. Revise section 209.470–4 to read as follows:

209.470–4 Solicitation provision and contract clause.

(a) Use the provision at 252.209–7003, Reserve Officer Training Corps and Military Recruiting on Campus—Representation, in all solicitations with institutions of higher education.

(b) Use the clause at 252.209–7005, Reserve Officer Training Corps and Military Recruiting on Campus, in all solicitations and contracts with institutions of higher education.

PART 216—TYPES OF CONTRACTS

■ 4. Amend section 216.203–4–70 by—

■ a. Revising the section heading; and

■ b. Revising paragraphs (a) and (c) to read as follows:

216.203–4–70 Additional provisions and clauses.

(a) *Price adjustment for basic steel, aluminum, brass, bronze, or copper mill products.* (1)(i) The price adjustment clause at 252.216–7000, Economic Price Adjustment—Basic Steel, Aluminum, Brass, Bronze, or Copper Mill Products, may be used in fixed-price supply solicitations and contracts for basic steel, aluminum, brass, bronze, or copper mill products, such as sheets, plates, and bars, when an established catalog or market price exists for the particular product being acquired.

(ii) The 10 percent figure in paragraph (d)(1) of the clause shall not be exceeded unless approval is obtained at a level above the contracting officer.

(2) Use the price adjustment provision at 252.216–7007, Economic Price Adjustment—Basic Steel, Aluminum, Brass, Bronze, or Copper Mill Products—Representation, in solicitations that include the clause at 252.216–7000, Economic Price Adjustment—Basic Steel, Aluminum, Brass, Bronze, or Copper Mill Products.

* * * * *

(c) *Price adjustment for wage rates or material prices controlled by a foreign government.* (1)(i) The price adjustment clause at 252.216–7003, Economic Price Adjustment—Wage Rates or Material Prices Controlled by a Foreign Government, may be used in fixed-price supply and service solicitations and contracts when—

(A) The contract is to be performed wholly or in part in a foreign country; and

(B) A foreign government controls wage rates or material prices and may, during contract performance, impose a

mandatory change in wages or prices of material.

(ii) Verify the base wage rates and material prices prior to contract award and prior to making any adjustment in the contract price.

(2) Use the provision at 252.216–7008, Economic Price Adjustment—Wage Rates or Material Prices Controlled by a Foreign Government—Representation, in solicitations that include the clause DFARS 252.216–7003, Economic Price Adjustment—Wage Rates or Material Prices Controlled by a Foreign Government.

PART 229—TAXES

■ 5. Amend section 229.402–70 by—
■ a. Revising the section heading; and
■ b. Revising paragraphs (c) and (e) to read as follows:

229.402–70 Additional provisions and clauses.

* * * * *

(c)(1) Use the clause at 252.229–7003, Tax Exemptions (Italy), in solicitations and contracts when contract performance will be in Italy.

(2) Use the provision at 252.229–7012, Tax Exemptions (Italy)—Representation, in solicitations that contain the clause at 252.229–7003, Tax Exemptions (Italy).

* * * * *

(e)(1) Use the clause at 252.229–7005, Tax Exemptions (Spain), in solicitations and contracts when contract performance will be in Spain.

(2) Use the provision at 252.229–7013, Tax Exemptions (Spain)—Representation, in solicitations that contain the clause at 252.229–7005, Tax Exemptions (Spain).

* * * * *

PART 252—SOLICITATION PROVISIONS AND CONTRACT CLAUSES

■ 6. The authority citation for 48 CFR part 252 continues to read as follows:

Authority: 41 U.S.C. 1303 and 48 CFR chapter 1.

■ 7. Amend section 252.204–7007 by—
■ a. Amending the clause date by removing ''(NOV 2011)'' and adding in its place ''(MAR 2012)''; and
■ b. Revising paragraph (d)(1) to read as follows:

252.204–7007 Alternate A, Annual Representations and Certifications.

* * * * *

(d)(1) The following representations or certifications in ORCA are applicable to this solicitation as indicated:

(i) 252.209–7001, Disclosure of Ownership or Control by the Government of a Terrorist Country. Applies to all solicitations expected to result in contracts of $150,000 or more.

(ii) 252.209–7003, Reserve Officer Training Corps and Military Recruiting on Campus—Representation. Applies to all solicitations with institutions of higher education.

(iii) 252.216–7008, Economic Price Adjustment—Wage Rates or Material Prices Controlled by a Foreign Government. Applies to solicitations for fixed-price supply and service contracts when the contract is to be performed wholly or in part in a foreign country, and a foreign government controls wage rates or material prices and may during contract performance impose a mandatory change in wages or prices of materials.

(iv) 252.225–7042, Authorization to Perform. Applies to all solicitations when performance will be wholly or in part in a foreign country.

(v) 252.229–7012, Tax Exemptions (Italy)—Representation. Applies to solicitations when contract performance will be in Italy.

(vi) 252.229–7013, Tax Exemptions (Spain)—Representation. Applies to solicitations when contract performance will be in Spain.

* * * * *

■ 8. Add section 252.209–7003 to read as follows:

252.209–7003 Reserve Officer Training Corps and Military Recruiting on Campus–Representation.

As prescribed in 209.470–4(a), use the following provision:

RESERVE OFFICER TRAINING CORPS AND MILITARY RECRUITING ON CAMPUS—REPRESENTATION (MAR 2012)

(a) *Definition.* ''Institution of higher education,'' as used in this provision, is defined in the clause at 252.209–7005, Reserve officer Training Corps and Military Recruiting on Campus.

(b) *Limitation on contract award.* Except as provided in paragraph (c) of this provision, an institution of higher education is ineligible for contract award if the Secretary of Defense determines that the institution has a current policy or practice (regardless of when implemented) that prohibits or in effect prevents—

(1) The Secretary of a military department from maintaining, establishing, or operating a unit of the Senior Reserve Officer Training Corps (ROTC) (in accordance with 10 U.S.C. 654 and other applicable Federal laws) at that institution;

(2) A student at that institution from enrolling in a unit of the Senior ROTC at another institution of higher education;

(3) The Secretary of a military department or the Secretary of Transportation from gaining entry to campuses, or access to students (who are 17 years of age or older) on campuses, for purposes of military recruiting; or

(4) Military recruiters from accessing, for purposes of military recruiting, the following information pertaining to students (who are 17 years of age or older) enrolled at that institution:

(i) Name.
(ii) Address.
(iii) Telephone number.
(iv) Date and place of birth.
(v) Educational level.
(vi) Academic major.
(vii) Degrees received.
(viii) Most recent educational institution enrollment.

(c) *Exception.* The limitation in paragraph (b) of this provision does not apply to an institution of higher education if the Secretary of Defense determines that the institution has a long-standing policy of pacifism based on historical religious affiliation.

(d) *Representation.* By submission of its offer, the offeror represents that the institution does not have any policy or practice described in paragraph (b) of this clause, unless the Secretary of Defense has determined that the institution has a long-standing policy of pacifism based on historical religious affiliation.

(End of provision)

■ 9. Amend section 252.209–7005 by—
■ a. Amending the introductory text by removing ''209.470–4'' and adding in its place ''209.470–4(b)'';
■ b. Amending the clause date by removing ''(JAN 2000)'' and adding in its place ''(MAR 2012)'';
■ c. Revising introductory text of paragraph (b);
■ d. Removing paragraph (d);
■ e. Redesignating paragraph (e) as paragraph (d); and
■ f. Revising the introductory text of the newly redesignated paragraph (d).

The revisions read as follows:

252.209–7005 Reserve Officer Training Corps and military recruiting on campus.

* * * * *

(b) *Limitation.* Except as provided in paragraph (c) of this clause, the Contractor shall not, during performance of this contract, have any policy or practice that prohibits or in effect prevents—

* * * * *

(d) Notwithstanding any other clause of this contract, if the Secretary of Defense determines that the Contractor misrepresented its policies and practices at the time of contract award or has violated the prohibition in paragraph (b) of this clause—

* * * * *

■ 10. Amend section 252.216–7000 by—
■ a. Amending the introductory text by removing ''216.203–4–70(a)'' and adding in its place ''216.203–4–70(a)(1)'';

■ b. Amending the clause date by removing ''(JUL 1997)'' and adding in its place ''(MAR 2012)''; and
■ c. Revising paragraph (b) to read as follows:

252.216–7000 Economic price adjustment—basic steel, aluminum, brass, bronze, or copper mill products.

* * * * *

(b) As represented by the Contractor in its offer, the unit price stated for _____ *(Identify the item)* is not in excess of the Contractor's established price in effect on the date set for opening of bids (or the contract date if this is a negotiated contract) for like quantities of the same item. This price is the net price after applying any applicable standard trade discounts offered by the Contractor from its catalog, list, or schedule price.

* * * * *

■ 11. Amend section 252.216–7003 by—
■ a. Amending the introductory text by removing ''216.203–4–70(c)'' and adding in its place ''216.203–4–70(c)(1)'';
■ b. Amending the clause date by removing ''(JUN 1997) and adding in its place ''(MAR 2012)''; and
■ c. Revising paragraph (a) to read as follows:

252.216–7003 Economic price adjustment-wage rates or material prices controlled by a foreign government.

* * * * *

(a) As represented by the Contractor in its offer, the prices set forth in this contract—

(1) Are based on the wage rates or material prices established and controlled by the government of the country specified by the Contractor in its offer; and

(2) Do not include contingency allowances to pay for possible increases in wage rates or material prices.

* * * * *

■ 12. Add section 252.216–7007 to read as follows:

252.216–7007 Economic price adjustment—basic steel, aluminum, brass, bronze, or copper mill products-representation.

As prescribed in 216.203–4–70(a)(2), use the following provision:

ECONOMIC PRICE ADJUSTMENT—BASIC STEEL, ALUMINUM, BRASS, BRONZE, OR COPPER MILL PRODUCTS—REPRESENTATION (MAR 2012)

(a) *Definitions.* The terms ''established price'' and ''unit price,'' as used in this provision, have the meaning given in the clause 252.216–7000, Economic Price Adjustment—Basic Steel, Aluminum, Brass, Bronze, or Copper Mill Products.

(b) By submission of its offer, the offeror represents that the unit price stated in this offer for _____ *(Identify the item)* is not in excess of the offeror's established price in effect on the date set for opening of bids (or the contract date if this is to be a negotiated contract) for like quantities of the same item. This price is the net price after applying any applicable standard trade discounts offered by the offeror from its catalog, list, or schedule price.

(End of provision)

■ 13. Add section 252.216–7008 to read as follows:

252.216–7008 Economic price adjustment—wage rates or material prices controlled by a foreign government—representation.

As prescribed in 216.203–4–70(c)(2), use the following provision:

Economic Price Adjustment—Wage Rates or Material Prices Controlled by a Foreign Government—Representation (MAR 2012)

(a) By submission of its offer, the offeror represents that the prices set forth in this offer—

(1) Are based on the wage rate(s) or material price(s) established and controlled by the government of _____ *(Offeror insert name of host country);* and

(2) Do not include contingency allowances to pay for possible increases in wage rates or material prices.

(End of provision)

■ 14. Amend section 252.229–7003 by—
■ a. Amending the introductory text by removing ''229.402–70(c)'' and adding in its place ''229.402–70(c)(1)'';
■ b. Amending the clause date by removing ''(JAN 2002)'' and adding in its place ''(MAR 2012)''; and
■ c. Revising paragraph (a) to read as follows:

252.229–7003 Tax Exemptions (Italy).

* * * * *

(a) As the Contractor represented in its offer, the contract price, including the prices in subcontracts awarded under this contract, does not include taxes from which the United States Government is exempt.

* * * * *

■ 15. Amend section 252.229–7005 by—
■ a. Amending the introductory text by removing ''229.402–70(e)'' and adding in its place ''229.402–70(e)(1)'';
■ b. Amending the clause date by removing ''(JUN 1997)'' and adding in its place ''(MAR 2012)''; and
■ c. Revising paragraph (a) to read as follows:

252.229–7005 Tax exemptions (Spain).

* * * * *

(a) As the Contractor represented in its offer, the contract price, including the prices in subcontracts awarded under this contract, does not include taxes from which the United States Government is exempt.

* * * * *

■ 16. Add section 252.229–7012 to read as follows:

252.229–7012 Tax exemptions (Italy)—representation.

As prescribed in 229.402–70(c)(2), use the following provision:

TAX EXEMPTIONS (ITALY)—REPRESENTATION (MAR 2012)

(a) *Exemptions.* The United States Government is exempt from payment of—

(1) Imposta Valore Aggiunto (IVA) tax in accordance with Article 72 of the IVA implementing decree on all supplies and services sold to United States Military Commands in Italy; and

(2) The other taxes specified in paragraph (c) of the clause DFARS 252.229–7003, Tax Exemptions (Italy).

(b) *Representation.* By submission of its offer, the offeror represents that the offered price, including the prices of subcontracts to be awarded under the contract, does not include the taxes identified herein, or any other taxes from which the United States Government is exempt.

(End of provision)

■ 17. Add section 252.229–7013 to read as follows:

252.229–7013 Tax exemptions (Spain)—representation.

As prescribed in 229.402–70(e)(2), use the following clause:

TAX EXEMPTIONS (SPAIN)—REPRESENTATION (MAR 2012)

(a) *Exemptions.* In accordance with tax relief agreements between the United States Government and the Spanish Government, and because the resultant contract arises from the activities of the United States Forces in Spain, the contract will be exempt from the excise, luxury, and transaction taxes listed in paragraph (b) of the clause DFARS 252.229–7005, Tax Exemptions (Spain).

(b) *Representation.* By submission of its offer, the offeror represents that the offered price, including the prices of subcontracts to be awarded under the contract, does not include the taxes identified herein, or any other taxes from which the United States Government is exempt.

(End of provision)

[FR Doc. 2012–7559 Filed 3–29–12; 8:45 am]

BILLING CODE 5001–06–P

DEPARTMENT OF DEFENSE

Defense Acquisition Regulations System

48 CFR Part 216

RIN 0750–AH67

Defense Federal Acquisition Regulation Supplement: Repeal of Case-by-Case Reporting (DFARS Case 2012–D020)

AGENCY: Defense Acquisition Regulations System, Department of Defense (DoD).

ACTION: Final rule.

SUMMARY: DoD is issuing a final rule amending the Defense Federal Acquisition Regulation Supplement (DFARS) to implement a section of the National Defense Authorization Act (NDAA) for Fiscal Year (FY) 2012, to remove a congressional notification requirement for single source task- or delivery-order contract awards over $103 million.

DATES: *Effective Date:* March 30, 2012.

FOR FURTHER INFORMATION CONTACT: Dustin Pitsch, telephone 571–372–6094.

SUPPLEMENTARY INFORMATION:

I. Background

This rule implements section 809(b) of the NDAA for FY 2012 (Pub. L. 112–81), which removes the requirement that the head of the agency must notify the congressional defense committees within 30 days for each single source task- or delivery-order contract award over $103 million.

II. Publication of This Final Rule for Public Comment Is Not Required by Statute

''Publication of proposed regulations'', 41 U.S.C. 1707, is the statute that applies to the publication of the Federal Acquisition Regulation. Paragraph (a)(1) of the statute requires that a procurement policy, regulation, procedure or form (including an amendment or modification thereof) must be published for public comment if it relates to the expenditure of appropriated funds, and has either a significant effect beyond the internal operating procedures of the agency issuing the policy, regulation, procedure or form, or has a significant cost or administrative impact on contractors or offerors. This final rule is not required to be published for public comment, because the rule merely removes the requirement for the head of the agency to notify congressional defense committees for each single source task- or delivery-order contract award over $103 million. These requirements affect only the internal operating procedures of the Government.

III. Executive Orders 12866 and 13563

Executive Orders (E.O.s) 12866 and 13563 direct agencies to assess all costs and benefits of available regulatory alternatives and, if regulation is necessary, to select regulatory approaches that maximize net benefits (including potential economic, environmental, public health and safety effects, distributive impacts, and equity). E.O. 13563 emphasizes the importance of quantifying both costs and benefits, of reducing costs, of harmonizing rules, and of promoting flexibility. This is not a significant regulatory action and, therefore, was not subject to review under section 6(b) of E.O. 12866, Regulatory Planning and Review, dated September 30, 1993. This rule is not a major rule under 5 U.S.C. 804.

IV. Regulatory Flexibility Act

The Regulatory Flexibility Act does not apply to this rule because this final rule does not constitute a significant DFARS revision as defined at FAR 1.501–1, and 41 U.S.C. 1707 does not require publication for public comment.

V. Paperwork Reduction Act

The rule does not contain any information collection requirements that require the approval of the Office of Management and Budget under the Paperwork Reduction Act (44 U.S.C. chapter 35).

List of Subjects in 48 CFR Part 216

Government procurement.

Mary Overstreet,

Editor, Defense Acquisition Regulations System.

Therefore, 48 CFR Part 216 is amended as follows:

PART 216—TYPES OF CONTRACTS

■ 1. The authority citation for 48 CFR part 216 is revised to read as follows:

Authority: 41 U.S.C. 1303 and 48 CFR chapter 1.

■ 2. Section 216.504 is revised to read as follows:

216.504 Indefinite-quantity contracts.

(c)(1)(ii)(D) *Limitation on single-award contracts.* The authority to make the determination authorized in FAR 16.504(c)(1)(ii)(D)(*1*) shall not be delegated below the level of the senior procurement executive.

[FR Doc. 2012–7555 Filed 3–29–12; 8:45 am]

BILLING CODE 5001–06–P

DEPARTMENT OF TRANSPORTATION

National Highway Traffic Safety Administration

49 CFR Part 571

[Docket No. NHTSA–2012–0037]

RIN 2127–AK20

Federal Motor Vehicle Safety Standards; Bus Emergency Exits and Window Retention and Release

AGENCY: National Highway Traffic Safety Administration (NHTSA), Department of Transportation (DOT).

ACTION: Final rule.

SUMMARY: In this final rule, which was preceded by a notice of proposed rulemaking, NHTSA is making several housekeeping amendments to the Federal motor vehicle safety standard for bus emergency exits. First, based on a proposal made in response to a petition for rulemaking from the School Bus Manufacturers Technical Council (SBMTC), NHTSA amends the standard to specify that the exterior release (the exterior handle) for school bus rear emergency exit doors may be located opposite the door hinges, rather than located in the middle of the door. Second, this final rule also clarifies the standard as to the number of force applications that are required to open a window or roof emergency exit. Third, in response to a comment on the proposed rule, this document makes a technical correction by removing a reference to a no-longer existent figure. These amendments correct or clarify the requirements of the standard. We believe most, if not all, school buses are currently designed to meet the corrected or clarified requirements.

DATES: The effective date is April 1, 2013. Manufacturers are provided optional early compliance with this final rule beginning March 30, 2012.

Petitions for reconsideration: Petitions for reconsideration of this final rule must be received no later than May 14, 2012.

ADDRESSES: Petitions for reconsideration of this final rule must refer to the docket number set forth above and be submitted to: Administrator, National Highway Traffic Safety Administration, 1200 New Jersey Avenue SE., Washington, DC 20590.

FOR FURTHER INFORMATION CONTACT: For non-legal issues, Mr. Conor McCafferty, Office of Crashworthiness Standards (telephone: 202–366–1046) (fax: 202–493–2990), NVS–113. For legal issues, Ms. Deirdre Fujita, Office of the Chief Counsel (telephone: 202–366–2992) (fax: 202–366–3820), NCC–112. These officials can be reached at the National Highway Traffic Safety Administration, 1200 New Jersey Avenue SE., Washington, DC 20590.

SUPPLEMENTARY INFORMATION:

Table of Contents

I. Background
II. Location of Exterior Release Mechanism (Exterior Handle)
III. Figure 3D
IV. Window or Roof Emergency Exit Release
V. Removing Reference to Figure 6B
VI. Rulemaking Analyses and Notices

I. Background

Federal Motor Vehicle Safety Standard (FMVSS) No. 217, ''Bus emergency exits and window retention and release,'' [1] applies to buses, including school buses, except buses manufactured for the purpose of transporting persons under physical restraint. The purpose of the standard is to minimize the likelihood of occupants being thrown from the bus and to provide a means of readily accessible emergency egress. The standard establishes requirements for the retention of windows other than windshields in buses, and establishes operating forces, opening dimensions, and markings for bus emergency exits.

In this final rule, we make several housekeeping amendments to FMVSS No. 217. First, NHTSA amends the standard to specify that the exterior release (the exterior handle) for school bus rear emergency exit doors may be located at the side opposite the door hinges, rather than located in the middle of the door. Second, this final rule also clarifies the standard as to the number of force applications that are required to open a window or roof emergency exit. Third, this document removes a reference to a no-longer existent figure.

The notice of proposed rulemaking (NPRM) upon which this final rule is based was published on December 28, 2009 (74 FR 68558) (Docket No. NHTSA–2009–0190).

We received seven comments on the NPRM from school bus manufacturers and private individuals.[2] None of the commenters opposed the proposal, several made suggested changes to specific provisions, and some commented on matters beyond the scope of the rulemaking.

II. Location of Exterior Release Mechanism (Exterior Handle)

FMVSS No. 217 (S5.3.3.1(a)) specifies requirements for the location of the interior and exterior releases (handles) for side and rear emergency door exits for school buses with a gross vehicle weight rating (GVWR) greater than 4,536 kilograms (10,000 pounds) (''large school buses'').

The standard currently specifies at S5.3.3.1(a) and Figure 3D of the standard that both the interior and exterior releases (handles) for rear emergency exit doors be located in the center of the door.[3] However, school bus manufacturers have always understood the standard as requiring only interior releases (interior handles) to be in the center of the door. They believed that the exterior handle may be near the edge of the door on the side opposite the hinges. They further believed that an exterior release (exterior handle) so located provides more leverage and may be designed to require less force to open the rear emergency exit door as compared to an exterior handle located in the center of the door.[4]

SBMTC petitioned the agency to amend FMVSS No. 217 to specify that the exterior release (exterior handle) for school bus rear emergency exit doors may be located near the edge of the door on the side opposite the hinges. Regarding interior releases (interior handles), the petitioner believed that the interior handles should be in the center of the door so that it is visible to bus occupants and not obscured by seat backs if the door is wider than the bus's center aisle.

In the NPRM, we tentatively agreed that the school bus manufacturers' current practice of placing the exterior rear emergency exit door release (exterior handle) near the edge of the door on the side opposite the hinges better meets the need for safety than placing the exterior release in the center of the door. Releases (exterior handles) placed opposite the hinges would require less force to pull open the door for persons outside the school bus than comparable releases located in the center.

Accordingly, we proposed to amend FMVSS No. 217 to specify that the exterior release (exterior handle) for the exit must only be in the high force access region shown in the left-side drawing (side view) of current Figure 3D; that is, only the vertical dimensions of the high force region are specified for the location of the exterior handle. We sought comment on whether we should require the exterior release to be no further than 51 millimeters (mm) (two inches) away from the edge of the door opposite the hinges.

We also clarified the requirement that the interior release (interior handle) for a rear emergency exit must be in the high force access region shown in both drawings of current Figure 3D, i.e., in the center of the door.

In addition, to make Figure 3D easier to understand, we proposed to rename the left-side drawing ''Figure 3D(1)'' and the right-side drawing ''Figure 3D(2).''

Comments

All commenters responding to this issue agreed with NHTSA that FMVSS No. 217 should be amended so that it specifies that the exterior release (exterior handle) for school bus rear emergency exit doors be located near the edge of the door on the side opposite the hinges.

However, no commenter supported the idea to limit placement of the exterior release to no further than 51 mm (two inches) from the edge of the door opposite the hinges. SBMTC stated that the NPRM did not give an explanation on the reasoning behind this proposal. SBMTC stated that the shaft of the exterior emergency door release handle on the majority of school buses is located approximately 76 to 127 mm (3 to 5 inches) from the edge of the door. SBMTC also noted that due to current school bus emergency door construction and because emergency

[1] 49 CFR 571.217.

[2] NHTSA received comments from Blue Bird Body Company (Blue Bird), Thomas Built Buses (Thomas Built), the National Truck Equipment Association (NTEA), SBMTC, and W. Coffey, N. Horner, and J. Walsh. This final rule does not discuss issues raised by commenters that were beyond the scope of the rulemaking, such as suggested ideas to possibly improve emergency egress or ideas to improve overall school bus occupant protection. Comments can be read at Docket No. NHTSA–2009–0190.

[3] S5.3.3.1(a) specifies that the manual interior and outside releases (handles) are located: ''Within the high force access region shown in Figure 3A for a side emergency exit door, and in figure 3D for a rear emergency exit door.'' Figure 3D consists of two drawings. The left-side drawing shows the side-view of the high force access region. As shown in the left-side drawing, the release (handle) may be located at any point from the left side of the door to the right. However, the right-side drawing, giving a different perspective of the rear exit (front view), shows that the high force access region is a narrow area in the center of the door. Since S5.3.3.1(a) requires the interior and exterior releases (handles) to be ''[w]ithin the high force access region shown in * * * figure 3D for a rear emergency exit door,'' the releases must be in that narrow area in the center of the door shown in the right-side drawing of Figure 3D.

[4] All things being equal, the longer the distance between the handle and the door hinges, the less force is required to open the door. Thus, for optimum leverage, the handle should be operated from the side of the door as far away as possible from the door hinges.

exits are already required to meet release forces as specified in FMVSS No. 217, it does not see any benefit or need to limit the maximum distance from the edge of the door to 51 mm (two inches).

Thomas Built believed that the 51 mm (two inch) limitation was arbitrary. Thomas Built requested that the edge dimension be determined by each individual manufacturer's design parameters because it would give the manufacturers some tolerance and flexibility in their respective designs.

NTEA believed that most manufacturers' exterior release handles on emergency doors are farther away than 51 mm (two inches) from the edge of the door. NTEA is unaware of any safety need to require design changes such that exterior release handles are no further than 51 mm (2 inches) from the edge of the door.

Response

We are adopting the proposed amendment, except for the requirement that the exterior release handle must be no further than 51 mm (two inches) away from the edge of the door. The purpose of the limitation would have been to ensure the emergency exit door opened within the force requirements set forth in the standard. After reviewing the comments, we agree with SBMTC that the force requirements specified in the standard for opening emergency exits are sufficient to meet this goal. It is the opening force, not the closeness to the edge of the door, that is important for opening the door from the outside.

We also agree with Thomas Built that the location of the exterior release handle should be determined by the individual manufacturer's design parameters because the door design may vary based on each manufacturer's model. Thus, specifying an exact location would be overly design restrictive when the standard already prescribes the maximum force to open the exit.

We received no comment on the issue of the effective date for the changes to the exterior release handle for the school bus rear emergency exit door.

III. Figure 3D

In its comment, Blue Bird stated that Figure 3D already has the required two drawings and only needs to change the width of the ''ACCESS REGION FOR HIGH FORCES'' in the right-hand drawing to span the entire door. Blue Bird stated that the proposal to split Figure 3D into Figures 3D(1) and 3D(2) did not seem necessary and may recreate the problem of using a single two-dimensional drawing to communicate three-dimensional information.

Response

We do not agree with Blue Bird's suggestion that the high access region depicted in Figure 3D(2) (right side drawing) extends across the entire width of the door. The access region depicted in Figure 3D(2) (front view of the access regions for the rear emergency exit without rear obstruction) provides the location requirement for the interior release mechanism (interior handle) and ensures that it is in a location accessible from inside of the school bus. As we explained in the NPRM, the interior release handle for the emergency exit was intentionally required to be located in the center of the door so that it is visible to bus occupants and the view of the handle is not obstructed by seat backs. Further, as noted by SBMTC, the exit would be opened from inside by a pushing motion rather than a pulling motion, so locating the handle in the center of the door does not markedly increase the difficulty of opening the door.

Further, we do not agree with Blue Bird's suggestion not to split Figure 3D into Figures 3D(1) and 3D(2). Splitting Figure 3D into two parts allows referencing the two figures individually, to provide separate location requirements for the interior and exterior release mechanisms. As explained earlier, we intentionally described the interior handle as being in the center of the door, as indicated by Figures 3D(1) (side view) and 3D(2) (front view). However, for exterior release handles, which are not at risk of being obscured, we are only specifying the vertical dimensions of the high force region and are providing flexibility to the manufacturer to place the exterior release handle anywhere along the width of the door, as indicated by Figure 3D(1) alone (with vertical dimensions shown in the front view—3D(2)).

IV. Window or Roof Emergency Exit Release

FMVSS No. 217 (S5.3.3.2) specifies the number, location, type, and magnitude of force applications to open emergency exit windows in all school buses, and S5.3.3.3 does the same for school bus emergency roof exits. At S5.3.2, the standard specifies the number, location, type and magnitude of force applications to open emergency exits in buses other than school buses.

These paragraphs of the standard specify, among other things: ''In the case of [an exit] with one release mechanism, the mechanism shall require two force applications to release the exit. In the case of [an exit] with two release mechanisms, each mechanism shall require one [force] application to release the exit.'' The language first appeared in a November 2, 1992 final rule (57 FR 49423).

In a June 13, 1994 interpretation letter to Blue Bird, NHTSA stated that the sentence in S5.3.3.2, ''In the case of windows with one release mechanism, the mechanism shall require two force applications to release the exit,'' was incorrect. The agency stated that the sentence was meant to read: ''In the case of windows with one release mechanism, the exit shall require two force applications *to open*.'' (Emphasis added.) That is to say, the agency intended a window or roof exit with one release mechanism to be able to be opened with only two force applications: One force application that undoes the release mechanism, and a second force application that opens the exit. The concern is that, because of the current wording of S5.3.3.2, the paragraph could be read as specifying that two force applications are used to activate the single mechanism and that a third force application is applied to open the exit.

The NPRM proposed to change the wording so that it states more clearly what the agency had intended. NHTSA proposed to make S5.3.2, S5.3.3.2, and S5.3.3.3 clearer by separating the requirements for operating an exit's release mechanism(s) from the requirements for opening the exit. NHTSA proposed to specify, for exits with one release mechanism, the exit must require two force applications to open: One to release the mechanism and another to open the exit. For exits with two release mechanisms, there must be a total of three force applications to open the exit: One force application must be applied to each of the two mechanisms to release the mechanism, and another force must be applied to open the exit.

We viewed this rulemaking as primarily a housekeeping measure and stated our belief in the NPRM that all emergency window and roof exits are currently designed to meet the requirements as the agency had intended to be understood.

Comments

We received no comments on this issue. Thus, no manufacturer disagreed with our statement that all emergency window and roof exits are currently designed to meet the existing requirements regarding the number of

force applications. Blue Bird stated generally that it was ''supportive of this NPRM's housekeeping measures,'' which we assume refers to this as well as the other proposed amendments.

Response

For the reasons in the NPRM, we are adopting the changes proposed in the December 2009 NPRM.

V. Removing Reference to Figure 6B

In its comment, Blue Bird pointed out another housekeeping measure. In an August 12, 2005 final rule (70 FR 47131), we amended FMVSS No. 217 by, among other things, removing Figure 6B from the standard. Inadvertently, we did not remove a reference to Figure 6B in the regulatory text of S5.4.3.1(a). Today's final rule corrects S5.4.3.1(a) by removing the reference to Figure 6B.

VI. Rulemaking Analyses and Notices

Executive Order 12866 and DOT Regulatory Policies and Procedures

This rulemaking document was not reviewed by the Office of Management and Budget under E.O. 12866. It is not considered to be significant under E.O. 12866 or the Department's Regulatory Policies and Procedures (44 FR 11034; February 26, 1979). This final rule is of a housekeeping nature. We believe that all vehicles currently meet the changes discussed in this final rule and that there will be no costs associated with this rule.

Regulatory Flexibility Act

Pursuant to the Regulatory Flexibility Act (5 U.S.C. 601 *et seq.,* as amended by the Small Business Regulatory Enforcement Fairness Act (SBREFA) of 1996), whenever an agency is required to publish a notice for any proposed or final rule, it must prepare and make available for public comment a regulatory flexibility analysis that describes the effect of the rule on small entities (i.e., small businesses, small organizations, and small governmental jurisdictions), except as provided below. The Small Business Administration's regulations at 13 CFR part 121 define a small business, in part, as a business entity ''which operates primarily within the United States.'' (13 CFR 121.105(a)). No regulatory flexibility analysis for a rule is required if the head of an agency certifies that the rule will not have a significant economic impact on a substantial number of small entities. The SBREFA amended the Regulatory Flexibility Act to require Federal agencies to provide a statement of the factual basis for certifying that a rule will not have a significant economic impact on a substantial number of small entities.

NHTSA has considered the effects of this rulemaking action under the Regulatory Flexibility Act. I hereby certify that this final rule will not have a significant economic impact on a substantial number of small entities. The basis for the certification is that this final rule is of a housekeeping nature. It does not change any FMVSS No. 217 requirements that school bus manufacturers are now meeting.

National Environmental Policy Act

NHTSA has analyzed this rulemaking action for the purposes of the National Environmental Policy Act. The agency has determined that implementation of this action does not have any significant impact on the quality of the human environment.

Executive Order 13132 (Federalism)

NHTSA has examined today's final rule pursuant to Executive Order 13132 (64 FR 43255, August 10, 1999) and concluded that no additional consultation with States, local governments or their representatives is mandated beyond the rulemaking process. The agency has concluded that this housekeeping rulemaking does not have sufficient federalism implications to warrant consultation with State and local officials or the preparation of a federalism summary impact statement. The final rule does not have ''substantial direct effects on the States, on the relationship between the national government and the States, or on the distribution of power and responsibilities among the various levels of government.''

NHTSA rules can preempt in two ways. First, the National Traffic and Motor Vehicle Safety Act contains an express preemption provision: When a motor vehicle safety standard is in effect under this chapter, a State or a political subdivision of a State may prescribe or continue in effect a standard applicable to the same aspect of performance of a motor vehicle or motor vehicle equipment only if the standard is identical to the standard prescribed under this chapter. 49 U.S.C. 30103(b)(1). It is this statutory command by Congress that preempts any non-identical State legislative and administrative law addressing the same aspect of performance.

The express preemption provision described above is subject to a savings clause under which ''[c]ompliance with a motor vehicle safety standard prescribed under this chapter does not exempt a person from liability at common law.'' 49 U.S.C. 30103(e) Pursuant to this provision, State common law tort causes of action against motor vehicle manufacturers that might otherwise be preempted by the express preemption provision are generally preserved. However, the Supreme Court has recognized the possibility, in some instances, of implied preemption of such State common law tort causes of action by virtue of NHTSA's rules, even if not expressly preempted. This second way that NHTSA rules can preempt is dependent upon there being an actual conflict between an FMVSS and the higher standard that would effectively be imposed on motor vehicle manufacturers if someone obtained a State common law tort judgment against the manufacturer, notwithstanding the manufacturer's compliance with the NHTSA standard. Because most NHTSA standards established by an FMVSS are minimum standards, a State common law tort cause of action that seeks to impose a higher standard on motor vehicle manufacturers will generally not be preempted. However, if and when such a conflict does exist—for example, when the standard at issue is both a minimum and a maximum standard—the State common law tort cause of action is impliedly preempted. See *Geier* v. *American Honda Motor Co.,* 529 U.S. 861 (2000).

Pursuant to Executive Order 13132 and 12988, NHTSA has considered whether this rule could or should preempt State common law causes of action. The agency's ability to announce its conclusion regarding the preemptive effect of one of its rules reduces the likelihood that preemption will be an issue in any subsequent tort litigation.

To this end, the agency has examined the nature (*e.g.,* the language and structure of the regulatory text) and objectives of today's rule and finds that this rule prescribes only housekeeping amendments. Accordingly, NHTSA does not intend that this rule preempt state tort law.

Executive Order 12988 (Civil Justice Reform)

With respect to the review of the promulgation of a new regulation, section 3(b) of Executive Order 12988, ''Civil Justice Reform'' (61 FR 4729, February 7, 1996) requires that Executive agencies make every reasonable effort to ensure that the regulation: (1) Clearly specifies the preemptive effect; (2) clearly specifies the effect on existing Federal law or regulation; (3) provides a clear legal standard for affected conduct, while promoting simplification and burden reduction; (4) clearly specifies the

retroactive effect, if any; (5) adequately defines key terms; and (6) addresses other important issues affecting clarity and general draftsmanship under any guidelines issued by the Attorney General. This document is consistent with that requirement.

Pursuant to this Order, NHTSA notes as follows. The preemptive effect of this rule is discussed above. NHTSA notes further that there is no requirement that individuals submit a petition for reconsideration or pursue other administrative proceeding before they may file suit in court.

Paperwork Reduction Act

Under the Paperwork Reduction Act of 1995, a person is not required to respond to a collection of information by a Federal agency unless the collection displays a valid Office of Management and Budget (OMB) control number. There are no collections of information associated with today's final rule. Thus, the Paperwork Reduction Act does not apply.

National Technology Transfer and Advancement Act

Section 12(d) of the National Technology Transfer and Advancement Act of 1995 (NTTAA), Public Law 104–113, section 12(d) (15 U.S.C. 272) directs NHTSA to use voluntary consensus standards in its regulatory activities unless doing so would be inconsistent with applicable law or otherwise impractical. Voluntary consensus standards are technical standards (e.g., materials specifications, test methods, sampling procedures, and business practices) that are developed or adopted by voluntary consensus standards bodies, such as the Society of Automotive Engineers (SAE). The NTTAA directs the agency to provide Congress, through the OMB, explanations when we decide not to use available and applicable voluntary consensus standards.

After carefully reviewing the available information, NHTSA has determined that there are no voluntary consensus standards relevant to this rulemaking, as this final rule clarifies existing FMVSS No. 217 requirements.

Unfunded Mandates Reform Act

Section 202 of the Unfunded Mandates Reform Act of 1995 (UMRA) requires Federal agencies to prepare a written assessment of the costs, benefits, and other effects of proposed or final rules that include a Federal mandate likely to result in the expenditure by State, local or tribal governments, in the aggregate, or by the private sector, of more than $100 million in any one year (adjusted for inflation with base year of 1995). This final rule will not result in the expenditure by State, local, or tribal governments, in the aggregate, or by the private sector of more than $100 million annually.

Executive Order 13211

Executive Order 13211 (66 FR 28355, May 18, 2001) applies to any rulemaking that: (1) Is determined to be economically significant as defined under E.O. 12866, and is likely to have a significantly adverse effect on the supply of, distribution of, or use of energy; or (2) that is designated by the Administrator of the Office of Information and Regulatory Affairs as a significant energy action. This rulemaking is not subject to E.O. 13211.

Regulation Identifier Number (RIN)

The Department of Transportation assigns a regulation identifier number (RIN) to each regulatory action listed in the Unified Agenda of Federal Regulations. The Regulatory Information Service Center publishes the Unified Agenda in April and October of each year. You may use the RIN contained in the heading at the beginning of this document to find this action in the Unified Agenda.

Privacy Act

Anyone is able to search the electronic form of all comments received into any of our dockets by the name of the individual submitting the comment (or signing the comment, if submitted on behalf of an association, business, labor union, etc.). You may review DOT's complete Privacy Act Statement in the **Federal Register** published on April 11, 2000 (65 FR 19477 at 19478).

List of Subjects in 49 CFR Part 571

Labeling, Motor vehicle safety, Reporting and recordkeeping requirements, Tires.

In consideration of the foregoing, NHTSA amends 49 CFR part 571 as follows:

PART 571—FEDERAL MOTOR VEHICLE SAFETY STANDARDS

■ 1. The authority for part 571 continues to read as follows:

Authority: 49 U.S.C. 322, 30111, 30115, 30117 and 30166; delegation of authority at 49 CFR 1.50.

■ 2. Section 571.217 is amended by:
■ a. Revising S5.3.2;
■ b. Adding S5.3.2.1(a) and S5.3.2.1(b);
■ c. Revising S5.3.3.1(a);
■ d. Revising S5.3.3.2;
■ e. Adding S5.3.3.2.1(a) and S5.3.3.2.1(b);
■ f. Revising S5.3.3.3;
■ g. Adding S5.3.3.3.1(a) and S5.3.3.3.1(b);
■ h. Revising S5.4.3.1(a); and,
■ i. Revising Figure 3D.

The revised and added text and figure read as follows:

§ 571.217 Bus emergency exits and window retention and release.

* * * * *

S5.3.2 (a) When tested under the conditions of S6, both before and after the window retention test required by S5.1, each emergency exit not required by S5.2.3 shall allow manual release of the exit by a single person, from inside the passenger compartment, using force applications each of which conforms, at the option of the manufacturer, either to S5.3.2.1(a) or S5.3.2.1(b).

(b) Each exit described in S5.3.2(a) shall have no more than two release mechanisms. For exits with one release mechanism, the exit shall require two force applications to open the exit: One force application shall be applied to the mechanism and another force application shall be applied to open the exit. The force application for the release mechanism must differ by not less than 90 degrees and not more than 180 degrees from the direction of the initial motion to open the exit. For exits with two release mechanisms, there shall be a total of three force applications to open the exit: One force application shall be applied to each of the two mechanisms to release each mechanism, and another force shall be applied to open the exit. The force application for at least one of the release mechanisms must differ by not less than 90 degrees and not more than 180 degrees from the direction of the initial motion to open the exit. The force applications for the mechanism(s) must conform to either S5.3.2.1(a) or S5.3.2.1(b), as appropriate.

S5.3.2.1(a) *Low-force application.*

(1) Location: As shown in Figure 1 or Figure 3.

(2) Type of motion: Rotary or straight.

(3) Magnitude: Not more than 90 N.

(b) *High-force application.*

(1) Location: As shown in Figure 2 or Figure 3.

(2) Type of motion: Straight and perpendicular to the undisturbed exit surface.

(3) Magnitude: Not more than 270 N.

S5.3.3 * * *

S5.3.3.1 * * *

(a) *Location:* Within the high force access region shown in Figure 3A for a side emergency exit door, within the high force access region shown in both

Figure 3D(1) and Figure 3D(2) for an interior release mechanism for a rear emergency exit door, and within the high force access region shown in Figure 3D(1) for an exterior release mechanism for a rear emergency exit door.

* * * * *

S5.3.3.2 When tested under the conditions of S6., both before and after the window retention test required by S5.1, each school bus emergency exit window shall allow manual opening of the exit by a single person, from inside the passenger compartment. Each exit shall have no more than two release mechanisms. The mechanism(s) must be located in either the specified low-force or high-force regions (at the option of the manufacturer), with force applications and types of motions that conform to either S5.3.3.2.1(a) or (b) of this section, as appropriate. For exits with one release mechanism, the exit shall require two force applications to open the exit: One force application shall be applied to the mechanism and another force application shall be applied to open the exit. The force application for the release mechanism must differ by not less than 90 degrees and not more than 180 degrees from the direction of the initial motion to open the exit. For exits with two release mechanisms, there shall be a total of three force applications to open the exit: One force application shall be applied to each of the two mechanisms to release each mechanism, and another force shall be applied to open the exit. The force application for at least one of the release mechanisms must differ by not less than 90 degrees and not more than 180 degrees from the direction of the initial motion to open the exit. Each release mechanism shall operate without the use of remote controls or tools, and notwithstanding any failure of the vehicle's power system. When a release mechanism is unlatched and the vehicle's ignition is in the ''on'' position, a continuous warning shall be audible at the driver's seating position and in the vicinity of that emergency exit.

S5.3.3.2.1(a) Emergency exit windows—*Low-force application.*

(1) Location: Within the low-force access regions shown in Figures 1 and 3 for an emergency exit window.

(2) Type of motion: Rotary or straight.

(3) Magnitude: Not more than 90 N.

(b) Emergency exit windows—*High-force application.*

(1) Location: Within the high-force access regions shown in Figures 2 and 3 for an emergency exit window.

(2) Type of motion: Straight and perpendicular to the undisturbed exit surface.

(3) Magnitude: Not more than 180 N.

S5.3.3.3 When tested under the conditions of S6., both before and after the window retention test required by S5.1, each school bus emergency roof exit must allow manual opening of the exit by a single person, from inside the passenger compartment. Each exit shall have no more than two release mechanisms. The mechanism(s) must be located in either the specified low-force or high-force regions (at the option of the manufacturer), with force applications and types of motions that conform to either S5.3.3.3.1(a) or (b) of this section, as appropriate. For exits with one release mechanism, the exit shall require two force applications to open the exit: One force application shall be applied to the mechanism and another force application shall be applied to open the exit. The force application for the release mechanism must differ by not less than 90 degrees and not more than 180 degrees from the direction of the initial motion to open the exit. For exits with two release mechanisms, there shall be a total of three force applications to open the exit: One force application shall be applied to each of the two mechanisms to release each mechanism, and another force shall be applied to open the exit. The force application for at least one of the release mechanisms must differ by not less than 90 degrees and not more than 180 degrees from the direction of the initial motion to open the exit.

S5.3.3.3.1(a) Emergency roof exits—*Low-force application.*

(1) Location: Within the low force access regions shown in Figure 3B, in the case of buses whose roof exits are not offset from the plane specified in S5.2.3.2(b)(5). In the case of buses which have roof exits offset from the plane specified in S5.2.3.2(b)(5), the amount of offset shall be used to recalculate the dimensions in Figure 3B for the offset exits.

(2) Type of motion: Rotary or straight.

(3) Magnitude: Not more than 90 N.

(b) Emergency roof exits—*High-force application.*

(1) Location: Within the high force access regions shown in Figure 3B, in the case of buses whose roof exits are not offset from the plane specified in S5.2.3.2(b)(5). In the case of buses which have roof exits offset from the plane specified in S5.2.3.2(b)(5), the amount of offset shall be used to recalculate the dimensions in Figure 3B for the offset exits.

(2) Type of motion: Straight and perpendicular to the undisturbed exit surface.

(3) Magnitude: Not more than 180 N.

* * * * *

S5.4.3.1 * * *

(a) In the case of side emergency exit doors, any portion of the wheelchair securement anchorage is within the space bounded by the interior side wall and emergency exit door opening, transverse vertical planes 305 mm (12 inches) forward and rearward of the center of any side emergency exit door restricted area, and a longitudinal vertical plane through the longitudinal centerline of the school bus, as shown in Figure 6A.

* * * * *

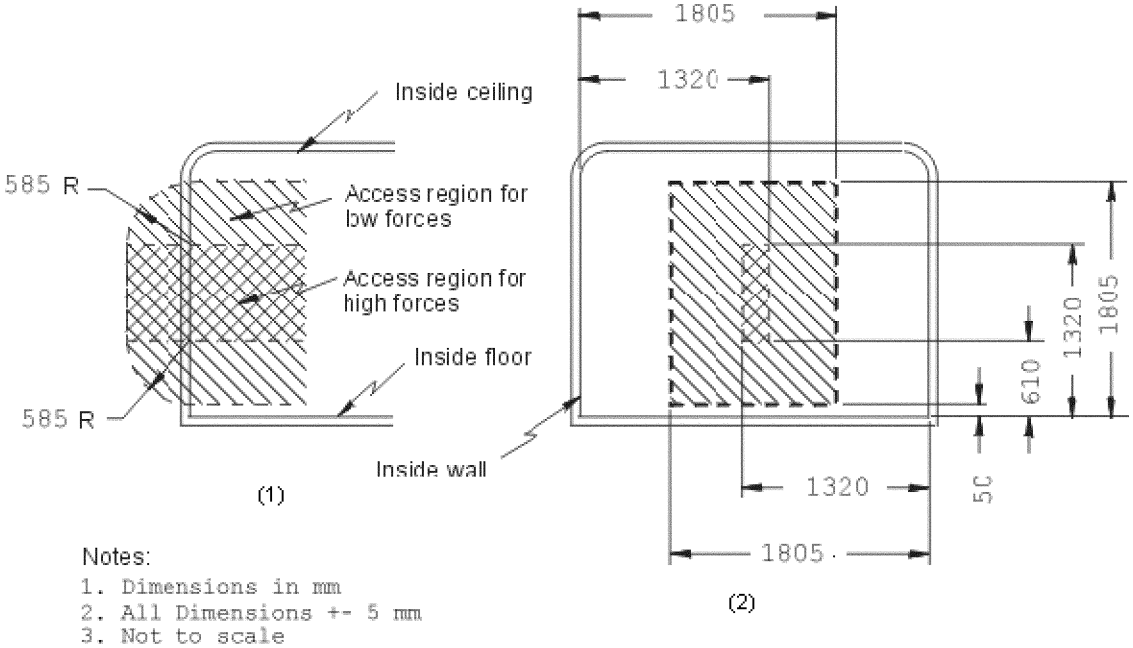

Figure 3D

* * * * *

Issued on: March 23, 2012.

David L. Strickland,

Administrator.

[FR Doc. 2012–7626 Filed 3–29–12; 8:45 am]

BILLING CODE 4910–59–P

DEPARTMENT OF COMMERCE

National Oceanic and Atmospheric Administration

50 CFR Part 648

[Docket No. 110816505–2184–03]

RIN 0648–BB39

Fisheries of the Northeastern United States; Northeast Multispecies Fishery Management Plan; Secretarial Amendment

AGENCY: National Marine Fisheries Service (NMFS), National Oceanic and Atmospheric Administration (NOAA), Commerce.

ACTION: Final rule.

SUMMARY: This final rule implements a Secretarial Amendment to the Northeast Multispecies Fishery Management Plan to establish a mechanism for specifying annual catch limits and accountability measures for the small-mesh multispecies fishery beginning in fishing year 2012. This amendment is necessary because the New England Fishery Management Council has been delayed in implementing a mechanism to specify annual catch limits and accountability measures for the silver hake, red hake, and offshore hake stocks that are managed as a sub-set of the Northeast Multispecies Fishery Management Plan to meet the 2011 deadline in the Magnuson-Stevens Fishery Conservation and Management Act.

DATES: This rule is effective on April 30, 2012.

ADDRESSES: An environmental assessment (EA) was prepared for the Secretarial Amendment that describes the proposed action and other considered alternatives, and provides an analysis of the impacts of the proposed measures and alternatives. Copies of the Secretarial Amendment, including the EA and the Initial Regulatory Flexibility Analysis (IRFA), are available on request from Daniel Morris, Acting Regional Administrator, Northeast Regional Office, 55 Great Republic Drive, Gloucester, MA 01930. These documents are also available online at *http://www.nero.noaa.gov.*

FOR FURTHER INFORMATION CONTACT: Moira Kelly, Fishery Policy Analyst, (978) 281–9218.

SUPPLEMENTARY INFORMATION:

Background

The small-mesh multispecies complex is composed of five stocks of three species of hakes (northern silver hake, southern silver hake, northern red hake, southern red hake, and offshore hake), and the fishery is managed through a series of exemptions from the other provisions of the Northeast Multispecies Fishery Management Plan (FMP). Amendment 19 to the FMP was initiated by the New England Fishery Management Council (Council) in 2009 to establish a mechanism for specifying annual catch limits (ACLs) and accountability measures (AMs) for the small-mesh multispecies fishery, as required by the 2007 reauthorization of the Magnuson-Stevens Fishery Conservation and Management Act (Magnuson-Stevens Act), 16 U.S.C. 1801 *et seq.* The Council postponed development of the amendment in order to include the results of an updated stock assessment in November 2010. Developing the amendment has been further delayed by the Council due to other pressing actions, and Amendment 19 is not scheduled to be implemented until October 2012, well past the Magnuson-Stevens Act's deadline of 2011 for implementing ACLs and AMs. NMFS has determined that it is necessary and appropriate, under section 304(c)(1)(A) of the Magnuson-Stevens Act, to develop a Secretarial Amendment in order to bring the small-mesh multispecies fishery into compliance with the Magnuson-Stevens Act requirements concerning ACLs and AMs. A description of the steps NMFS took to comply with the Magnuson-Stevens Act requirements for implementing a Secretarial Amendment was included in the proposed rule published on December 23, 2011 (76 FR 80318) and is not repeated here.

Final Measures

Mechanism for Specifying Catch Limits and the Specification Process

The Magnuson-Stevens Act requires that each FMP establish ''a mechanism for specifying annual catch limits * * * at such a level that overfishing does not occur in the fishery, including measures to ensure accountability.'' In order to do establish ACLs and AMs for the small-mesh multispecies fishery, the first step is to estimate the overfishing limit (OFL) for each stock. The OFL is the amount of catch above which overfishing is deemed to be occurring; that is, it is a status determination criterion for overfishing. It is an annual limit derived as the product of current exploitable biomass and the current rate of fishing, after taking into account the variance of each factor. To calculate the OFL for each stock, the Council's Small-Mesh Multispecies Plan Development Team (PDT) derived a distribution of OFLs for each species; each OFL is equal to the 50th percentile of that distribution. The 3-year moving average biomass for silver hake is estimated using the fall trawl survey and the 3-year moving average biomass estimate for red hake is estimated using the spring trawl survey, based on guidance from the Council's Scientific and Statistical Committee (SSC) and the November 2010 stock assessment. No reliable estimates for offshore hake are available.

For fishing years 2012–2014, the OFLs are as follows:

TABLE 1—FISHING YEARS 2012–2014 OFLS

	OFL (mt)
Northern Red Hake	314
Northern Silver Hake	24,840
Southern Red Hake	3,448
Southern Silver Hake	62,301

The second step in establishing ACLs is to account for uncertainty in the OFL estimate by estimating the acceptable biological catch (ABC). ABC is the level of catch that accounts for scientific uncertainty in the estimate of the OFL and any other scientific uncertainty. Based on guidance from the SSC, the ABCs are set equal to the 40th percentile of the OFL distribution for both red hake stocks, and the 25th percentile for both silver hake stocks (Table 2). In order to account for offshore hake, which are caught incidentally in the southern silver hake fishery and are marketed together as ''whiting,'' the southern silver hake ABC is increased by 4 percent.

TABLE 2—FISHING YEARS 2012–2014 ABCS

	OFL (mt)	Percentile of OFL distribution	Percent of OFL	ABC
Northern Red Hake	314	40th	89.17	280
Northern Silver Hake	24,840	25th	53.05	13,177
Southern Red Hake	3,448	40th	94.52	3,259
Southern Whiting *	62,301	25th	54.48	33,940

* Southern Whiting ABC = Silver Hake 25th percentile of OFL (32,635 mt) + 4% (1,305 mt).

The final step in setting the ACLs, after estimating OFL and ABC, is to take into account any uncertainty in the ability of managers to effectively implement the recommended catch levels. The Council has recommended that ACLs for the small-mesh multispecies fishery be set equal to 95 percent of the corresponding ABC to account for management uncertainty. The mechanism to establish ACLs for the small-mesh multispecies fishery results in four ABCs (northern red hake, northern silver hake, southern red hake, and southern whiting), set below their respective OFLs to account for scientific uncertainty, and four corresponding ACLs, set below ABC to account for management uncertainty, where ACL = 95 percent ABC (Table 3.)

TABLE 3—FISHING YEARS 2012–2014 ABCS AND ACLS FOR SMALL-MESH MULTISPECIES

	ABC (mt)	ACL (95% of ABC) (mt)
Northern Red Hake	280	266
Northern Silver Hake	13,177	12,518
Southern Red Hake	3,259	3,096
Southern Whiting	33,940*	32,243

* Southern Whiting ABC = Silver Hake 25th percentile of OFL (32,635 mt) + 4% (1,305 mt).

This final rule implements total allowable landings (TAL) on a stock area basis, with southern silver and offshore hake combined. This results in four TALs (Table 4) that relate directly to the ACLs recommended by the SSC and the Council. Discards and estimated state landings are deducted from the ACLs, and stock area TALs are used as the management limit. At its September 2011 meeting, the Council recommended a 3-percent allowance for state landings. The Council also recommended using a discard estimate based on the average discards from 2008–2010 for all stocks.

TABLE 4—FISHING YEAR 2012–2014 ACLS AND TALS

	Northern Red Hake	Northern Silver Hake	Southern Red Hake	Southern Whiting
ACL	266 mt	12,518 mt	3,096 mt	32,295 mt.
Discard % (2008–2010)	65%	26%	56%	13%.
Discards (mt)	173 mt	3,255 mt	1,718 mt	4,198 mt.
State Landings (3% of ACL—Discards)	2.8 mt	278 mt	42 mt	842 mt.
Federal TAL (mt)	90.3 mt	8,985 mt	1,336 mt	27,255 mt.
Federal TAL (lb)	199,077.4 lb	19,809,243 lb	2,945,376 lb	60,086,990 lb.

After the publication of the proposed rule, the Council's PDT corrected a calculation error in the information provided to the Whiting Oversight Committee, upon which NMFS based the measures in the proposed rule. The PDT inadvertently used the 2007–2009 discard rates instead of the 2008–2010 discard rates as was intended by the Council. Correcting this error results in a slight decrease in the TALs for both northern silver hake and southern whiting (southern silver hake plus offshore hake), a slight increase in the TAL for southern red hake, and a relatively significant decrease in the TAL for northern red hake. The northern red hake TAL set by this rule is the only TAL that is close to or below recent landings levels: Based on the updated information, the discard rate for northern red hake changed from 58 percent to 65 percent, which reduced the northern red hake TAL from the proposed 108 mt to 90.3 mt. The Whiting Oversight Committee and the Council did not object to correcting the data for Amendment 19, and do not objecting to doing the same in the Secretarial Amendment.

Specifications Process

Specifications will be set on a 3-year cycle, starting with the first year of implementation of the Secretarial Amendment. This process will be used to update the OFLs, ABCs, ACLs, and TALs based on the most recent available information using the calculations described above. Data expected to be used in the specifications setting process include, but are not limited to, new survey biomass indices, reported landings, estimated discards, and estimates of state-waters landings.

The Council, the PDT, and the Whiting Oversight Committee will monitor the status of the small-mesh multispecies fishery and resource. The Small-Mesh Multispecies PDT will meet to review the status of the stocks and the fishery. Based on this review, the PDT will report to the Council any changes or new information about the small-mesh multispecies stocks and/or fishery, and the PDT should recommend whether the specifications for the upcoming year(s) need to be modified. If necessary, the PDT will provide advice and recommendations to the Whiting Oversight Committee and the Council regarding the need to adjust measures for the small-mesh multispecies fishery to better achieve the FMP's objectives.

The PDT's recommendations will include the following information: OFL and ABC estimates for the next 3 fishing years, based on the control rules; ACLs that are set equal to 95 percent of the corresponding ABC; TALs that are calculated using an estimate of discards based on the most recent 3-year moving average for which data are available and an appropriate estimate of state-waters landings; an evaluation of catches compared to the ABCs in recent years; and any other measures that the PDT determines may be necessary to successfully implement the ACL framework, including, but not limited to, adjustments to the management uncertainty buffer between ABC and ACL.

The PDT will provide these recommendations to the SSC for review. The SSC will either approve the PDT's recommendations or provide alternative recommendations to the Council. The Council will then consider the SSC's and PDT's recommendations and make a decision on the specifications for the next 3 fishing years. The Council must establish ACLs that are equal to or lower than the SSC's recommended ABCs. Once the Council has approved ACLs, they will be submitted to NMFS for approval and implementation. After receiving the Council's ACLs, NMFS will review the recommendations and implement the ACLs in a manner consistent with the Administrative Procedure Act, if it is determined that the ACLs are consistent with applicable law. If the ACLs are determined to be inconsistent with applicable law, NMFS may publish alternative specifications that do not exceed the SSC's recommendations and are consistent with applicable law. If new ACLs are not implemented for the start of the new specifications cycle, the old ACLs will remain in effect until they are replaced.

Accountability Measures

This final rule implements both a proactive (in-season) and a reactive (post-season) AM framework for the small-mesh multispecies fishery. NMFS intends for the two AMs to complement each other and to work jointly to ensure that the catch limits are not exceeded, and, if they are, to mitigate the potential harm to the small-mesh multispecies stocks.

In-Season AM: Incidental Possession Limit Trigger

This final rule implements an AM that will reduce the possession of a particular stock to an incidental level when a trigger limit for that stock's TAL is projected to be reached. Under this approach, even if the TAL is exceeded, the possession limit will remain at the incidental level until the end of the fishing year. Based on a review of recent data and recommendations from the Council, this final rule implements the following incidental limits and triggers (Table 5).

TABLE 5—INCIDENTAL POSSESSION LIMITS AND TRIGGERS

	% of TAL	Incidental limit	
Red Hake	90	400 lb	181.44 kg
Silver and Offshore Hake, Combined	90	1,000 lb	907.18 kg

Post-Season AM: Pound-for-Pound Payback of an ACL Overage

The post-season AM requires NMFS, through the Northeast Regional Administrator, to deduct from a subsequent year's ACL any overage of a stock's ACL in a given year. ACL overages that occur in one year would be deducted from the ACL in the second year after the overage occurred (i.e., year 3). The data that are necessary to determine if an ACL was exceeded is not available until sometime the following year. Implementing the AM in year 3 is appropriate for the small-mesh multispecies fishery because this fishery in the northern area is restricted by the groundfish regulations in area and season. An in-season adjustment (i.e., in year 2) to an ACL might result in some exemption areas opening, while others would not. This also allows vessel owners the opportunity to prepare for the reduction with ample time to adjust their business plans.

Council Actions

Since the publication of the proposed rule for the Secretarial Amendment, the Council has preliminarily selected preferred measures for the purpose of public hearings on a draft of Amendment 19. Most of the measures being implemented in the Secretarial Amendment were also the Council's preferred alternatives, with three exceptions. First, the Council likely will propose a post-season AM that would reduce the in-season possession limit trigger by the same percentage by which the ACL was exceeded, instead of the pound-for-pound payback of an ACL overage implemented by this final rule. For example, if an ACL is exceeded by 5 percent, the Council may propose in Amendment 19 that the trigger would be reduced to 85 percent for the next fishing year. Second, the Council may propose in Amendment 19 an in-season AM incidental possession limit for silver hake and offshore hake, combined, of 2,000 lb (907.18 kg), instead of the 1,000-lb (453.59 kg), combined, in-season possession limit trigger implemented by this final rule. The third measure that differs between the Council's preliminary draft of Amendment 19 and the Secretarial Amendment is for the southern stock area quota framework. This final rule establishes an annual, stock-wide quota for the southern stock area. The Council may propose in Amendment 19 an annual, stock-wide quota that would switch to a quarterly, stock-wide quota in a subsequent fishing year if two-thirds of a southern stock area quota is harvested in a year. None of these alternatives were analyzed in the Secretarial Amendment. The Council did not provide any comments on the Secretarial Amendment; therefore, no changes from the proposed rule have been made based on the Council's work on Amendment 19.

Comments and Responses

One comment was received from an individual expressing support for the Secretarial Amendment and increased management of the small-mesh multispecies fishery in general. A second comment simply stated that 'I'm not sure this is a good idea,' without further explanation. For the reasons stated above, this rule is necessary and appropriate to bring the small-mesh multispecies fishery into compliance with the Magnuson-Stevens Act requirements concerning ACLs and AMs.

Changes From the Proposed Rule

As described above, we are implementing a change in the TAL calculations, based on updated information from the Council's PDT.

A technical correction to the regulations at 50 CFR 648.88, and the corresponding prohibition at § 648.14(k)(15)(ii)(C) is also being implemented through this rule. This change is necessary to remove the confusion regarding which species a vessel issued a ''non-regulated'' Northeast multispecies permit may land. Specifically, there may be confusion regarding ocean pout, which is not, by definition, a ''regulated species,'' but is not one of the species that a vessel issued a ''non-regulated'' permit may land.

Classification

The Administrator, Northeast Region, NMFS, determined that the Secretarial Amendment to the Northeast Multispecies FMP is necessary for conservation and management of the small-mesh multispecies fishery and that it is consistent with the Magnuson-Stevens Act and other applicable laws.

This final rule has been determined to be not significant for purposes of Executive Order 12866.

Pursuant to section 604 of the Regulatory Flexibility Act (RFA), this final rule includes a FRFA in support of the Secretarial Amendment analyzing the rule's impact on small entities. This FRFA incorporates the IRFA, a summary of the significant issues raised by the public comments in response to the IRFA, NMFS' responses to those comments, relevant analyses in the Amendment and its EA, and a summary of the analyses completed to support the action implemented through this rule. A copy of the analyses done in the Amendment and EA is available from the Northeast Regional Administrator (see **ADDRESSES**). A summary of the IRFA was published in the proposed rule for this action and is not repeated here. A description of why this action was considered, the objectives of, and the legal basis for this rule is contained in the preamble to the proposed rule and this final rule and is not repeated here.

A Summary of the Significant Issues Raised by the Public in Response to the IRFA, a Summary of the Agency's Assessment of Such Issues, and a Statement of Any Changes Made in the Proposed Rule as a Result of Such Comments

Two comments were received on the proposed rule and the amendment. However, neither addressed the IRFA or economic analysis contained in the Secretarial Amendment, and neither resulted in any changes to the rule.

Description and Estimate of Number of Small Entities to Which the Final Rule Will Apply

The Small Business Administration (SBA) considers commercial fishing entities (NAICS code 114111) to be small entities if they have no more than $4 million in annual sales, while the size standard for charter/party operators (part of NAICS code 487210) is $7 million in sales. The participants in the commercial small-mesh multispecies fishery are those vessels issued limited or open access Northeast multispecies permits that land any of the small-mesh multispecies. Because any vessel at any time may be issued an open access Northeast multispecies permit, it is difficult to determine how many vessels or owners will participate in this fishery in a given year. Although some firms own more than one vessel, available data make it difficult to reliably identify ownership control over more than one vessel. For this analysis, the number of vessels landing at least 1 lb (0.45 kg) of any of the small-mesh multispecies is considered to be a maximum estimate of the number of small business entities. The average number of permitted vessels landing at least 1 lb (0.45 kg) of silver hake or red hake from 2005–2010 was 562 vessels per year. Thus, all of the entities (fishing vessels) affected by this action are considered small entities under the SBA size standards for small fishing businesses ($4.0 million in annual gross sales). Therefore, there are no disproportionate effects on small versus large entities.

Information on costs in the fishery is not readily available and individual vessel profitability cannot be determined directly; therefore, expected changes in gross revenues were used as a proxy for profitability. In general, the economic impacts from the measures implemented in the Secretarial Amendment are neutral. There may be slightly negative impacts if the in-season or post-season AMs are triggered. These measures would reduce the amount of fish available to the fleet, which in turn would reduce revenues. On the other hand, there are likely to be positive long-term impacts on the fishery, as these measures are intended to ensure that the sustainable harvesting of the small-mesh multispecies stocks. These effects would be evaluated at the time such measures, if necessary, are implemented.

Description of Projected Reporting, Recordkeeping, and Other Compliance Requirements

There are no compliance requirements associated with this final rule implementing the Secretarial Amendment.

This final rule does not duplicate, overlap, or conflict with other Federal rules.

Description of the Steps the Agency Has Taken To Minimize the Significant Economic Impact on Small Entities Consistent With the Stated Objectives of Applicable Statutes

The management measures implemented in the Secretarial Amendment were developed to improve the overall management of the small-mesh multispecies fishery by establishing ACLs and AMs aimed at preventing overfishing. None of the measures being implemented in the Secretarial Amendment reduce fishing opportunities or flexibility. The TALs are well-above recent landings levels, except for northern red hake. These measures also promote efficiency within the fishery or reduce waste associated with regulatory discards by establishing incidental possession limits that take into account the existing behavior of the fleet and setting incidental possession limits at or above the current, market-driven incidental level.

Therefore, by implementing management measures that provide flexibility and efficiency and reduce waste, NMFS has taken the steps necessary to minimize the impacts of this action on small entities consistent with the stated objectives of applicable statutes.

Small Entity Compliance Guide

Section 212 of the Small Business Regulatory Enforcement Fairness Act of 1996 states that, for each rule or group of related rules for which an agency is required to prepare a FRFA, the agency shall publish one or more guides to assist small entities in complying with the rule, and shall designate such publications as ''small entity compliance guides.'' The agency shall explain the actions a small entity is required to take to comply with a rule or group of rules. As part of this rulemaking process, a letter to permit holders that also serves as small entity compliance guide (the guide) was prepared. Copies of this final rule are available from the Northeast Regional Office, and the guide, i.e., permit holder letter, will be sent to all holders of permits for the Northeast multispecies fishery. The guide and this final rule will be available upon request, and posted on the Northeast Regional Office's Web site at *www.nero.noaa.gov.*

List of Subjects in 50 CFR Part 648

Fisheries, Fishing, Recordkeeping and reporting requirements.

Dated: March 27, 2012.

Alan D. Risenhoover,

Acting Deputy Assistant Administrator for Regulatory Programs, National Marine Fisheries Service.

For the reasons stated in the preamble, 50 CFR part 648 is amended as follows:

PART 648—FISHERIES OF THE NORTHEASTERN UNITED STATES

■ 1. The authority citation for part 648 continues to read as follows:

Authority: 16 U.S.C. 1801 *et seq.*

■ 1. In § 648.14, paragraph (k)(15)(ii)(C) is revised to read as follows:

§ 648.14 Prohibitions.

* * * * *

(k) * * *

(15) * * *

(ii) * * *

(C) *Open access NE multispecies (non-regulated species permit).* It is unlawful for any owner or operator of a vessel issued a valid open access NE multispecies permit to possess or land any regulated species, as defined in § 648.2, or to violate any applicable provisions of § 648.88, unless otherwise specified in §§ 648.14, 648.86, or 648.88.

* * * * *

■ 2. In § 648.80, paragraphs (a)(8)(iii) and (a)(16)(iii) are revised to read as follows:

§ 648.80 NE Multispecies regulated mesh areas and restrictions on gear and methods of fishing.

* * * * *

(a) * * *

(8) * * *

(iii) For exemptions allowing no incidental catch of regulated species, as defined under paragraph (a)(8)(i) of this section, the NEFMC may recommend to the Regional Administrator, through the framework procedure specified in § 648.90(c), additions or deletions to exemptions for fisheries, either existing or proposed, for which there may be insufficient data or information for the Regional Administrator to determine, without public comment, percentage catch of regulated species. For exemptions allowing incidental catch of regulated species, as defined under paragraph (a)(8)(ii) of this section, the NEFMC may recommend to the Regional Administrator, through the framework procedure specified in § 648.90(c), additions or deletions to exemptions for fisheries, either existing or proposed, for which there may be insufficient data or information for the Regional Administrator to determine, without public comment, the risk that this exemption would result in a targeted regulated species fishery, the extent of the fishery in terms of time and area, and the possibility of expansion in the fishery.

* * * * *

(16) * * *

(iii) *Annual review.* On an annual basis, the Groundfish PDT will review data from this fishery, including sea sampling data, to determine whether adjustments are necessary to ensure that regulated species bycatch remains at a minimum. If the Groundfish PDT recommends adjustments to ensure that regulated species bycatch remains at a minimum, the Council may take action prior to the next fishing year through the framework adjustment process specified in § 648.90(c), and in accordance with the Administrative Procedure Act.

* * * * *

■ 3. In § 648.86, paragraph (d)(4) is added to read as follows:

§ 648.86 NE Multispecies possession restrictions.

* * * * *

(d) * * *

(4) *In-season adjustment of small-mesh multispecies possession limits.* If the Regional Administrator projects that 90 percent of a stock area TAL, as defined in § 648.90(b)(3), has been landed, the Regional Administrator shall reduce the possession limit of that

stock described in paragraphs (d)(4)(i) and (ii) of this section, for the remainder of the fishing year through notice consistent with the Administrative Procedure Act, unless such a reduction in the possession limit would be expected to prevent the TAL from being reached.

(i) *Red hake.* If a possession limit reduction is needed for a stock area, the incidental possession limit for red hake in that stock area will be 400 lb (181.44 kg) for the remainder of the fishing year.

(ii) *Silver hake and offshore hake.* If a possession limit reduction is needed for a stock area, the incidental possession limit for silver hake and offshore hake, combined, in that stock area will be 1,000 lb (453.59 kg) for the remainder of the fishing year.

* * * * *

■ 4. In § 648.88, paragraph (d) is revised to read as follows:

§ 648.88 Multispecies open access permit restrictions.

* * * * *

(d) *Non-regulated NE multispecies permit.* A vessel issued a valid open access non-regulated NE multispecies permit may possess and land one Atlantic halibut and unlimited amounts of the other non-regulated NE multispecies, unless otherwise restricted by § 648.86. The vessel is subject to restrictions on gear, area, and time of fishing specified in § 648.80 and any other applicable provisions of this part.

■ 5. In § 648.90, the introductory text is revised, and paragraphs (b) and (c)(1)(ii) are revised to read as follows:

§ 648.90 NE multispecies assessment, framework procedures and specifications, and flexible area action system.

For the NE multispecies framework specification process described in this section, the regulated species and ocean pout biennial review is considered a separate process from the small-mesh species annual review, as described in paragraphs (a)(2) and (b)(1), respectively, of this section. In addition, the process for specifying ABCs and associated ACLs for regulated species and ocean pout, as described in paragraph (a)(4) of this section, is considered a separate process from the small-mesh species ABC and ACL process described in paragraph (b)(2) of this section.

* * * * *

(b) *Small-mesh multispecies*—(1) *Three-year specifications process, annual review, and Stock Assessment and Fishery Evaluation.* The Council will specify on at least a 3-year basis the OFL, ABC, ACLs, and TALs for each small-mesh multispecies stock in accordance with the following process.

(i) At least every 3 years, based on the annual review, described below in paragraph (b)(3) of this section, and/or the SAFE Report described in paragraph (b)(4) of this section, recommendations for ABC from the Scientific and Statistical Committee (SSC), and any other relevant information, the Small-Mesh Multispecies PDT will recommend to the Whiting Oversight Committee and Council specifications including the OFL, ABC, ACL and TAL for each small-mesh multispecies stock the following specifications for a period of at least 3 years. The Small-Mesh Multispecies PDT and the Council will follow the process in paragraph (b)(2) of this section for setting these specifications.

(ii) The Small-Mesh Multispecies PDT, after reviewing the available information on the status of the stock and the fishery, may recommend to the Council any measures necessary to assure that the specifications will not be exceeded, as well as changes to the appropriate specifications.

(iii) Taking into account the annual review and/or SAFE Report described in paragraph (b)(2) of this section, the advice of the SSC, and any other relevant information, the Small-Mesh Multispecies PDT may also recommend to the Whiting Oversight Committee and Council changes to stock status determination criteria and associated thresholds based on the best scientific information available, including information from peer-reviewed stock assessments of small-mesh multispecies. These adjustments may be included in the Council's specifications for the small-mesh multispecies fishery.

(iv) *Council recommendation.* (A) The Council will review the recommendations of the Small-Mesh Multispecies PDT, Whiting Oversight Committee, and SSC, any public comment received thereon, and any other relevant information, and make a recommendation to the Regional Administrator on appropriate specifications and any measures necessary to assure that the specifications will not be exceeded.

(B) The Council's recommendation must include supporting documentation, as appropriate, concerning the environmental, economic, and social impacts of the recommendations. The Regional Administrator will consider the recommendations and publish a rule in the **Federal Register** proposing specifications and associated measures, consistent with the Administrative Procedure Act.

(C) The Regional Administrator may propose specifications different than those recommended by the Council. If the specifications published in the **Federal Register** differ from those recommended by the Council, the reasons for any differences must be clearly stated and the revised specifications must satisfy the criteria set forth in this section, the FMP, and other applicable laws.

(D) If the final specifications are not published in the **Federal Register** for the start of the fishing year, the previous year's specifications will remain in effect until superseded by the final rule implementing the current year's specifications, to ensure that there is no lapse in regulations while new specifications are completed.

(2) *Process for specifying ABCs, ACLs and TALs.* The Small-Mesh Multispecies PDT will calculate the OFL and ABC values for each small-mesh multispecies stock based on the control rules established in the FMP. These calculations will be reviewed by the SSC, guided by terms of reference developed by the Council. The ACLs and TALs will be calculated based on the SSC's approved ABCs, as specified in paragraphs (a)(2)(i)(A) through (C), and (a)(2)(ii)(A) through (C) of this section.

(i) *Red hake*—(A) *ABCs.* The Council's SSC will recommend an ABC to the Council for both the northern and southern stocks of red hake. The red hake ABCs are reduced from the OFLs based on an adjustment for scientific uncertainty as specified in the FMP; the ABCs must be less than or equal to the OFL.

(B) *ACLs.* The red hake ACLs are equal to 95 percent of the corresponding ABCs.

(C) *TALs.* The red hake TALs are equal to the ACLs minus a discard estimate based on the most recent 3 years of data. The red hake TALs are then reduced by 3 percent to account for red hake landings that occur in state waters.

(ii) *Silver and Offshore Hake*—(A) *ABCs.* The Council's SSC will recommend an ABC to the Council for both the northern and southern stocks of silver hake. The ABC for the southern stock of silver hake will be increased by 4 percent to account for catch of offshore hake. The combined silver hake and offshore hake ABC in the southern area will be the southern whiting ABC. The silver hake and whiting ABCs are reduced from the OFLs based on an adjustment for scientific uncertainty as specified in the FMP; the ABCs must be less than or equal to the OFLs.

(B) *ACLs.* The northern silver hake and southern whiting ACLs are equal to 95 percent of the ABCs.

(C) *TALs.* The northern silver hake and southern whiting TALs are equal to the northern silver hake and southern whiting ACLs minus a discard estimate based on the most recent 3 years of data. The northern silver hake and southern whiting TALs are then reduced by 3 percent to account for silver hake and offshore hake landings that occur in state waters.

(3) *Annual Review.* (i) The Small-Mesh Multispecies PDT will meet at least once annually to review the status of the stock and the fishery and the adequacy of the 3-year specifications. Based on such review, the PDT will provide a report to the Council on any changes or new information about the small-mesh multispecies stocks and/or fishery, and it will recommend whether the specifications for the upcoming year(s), established pursuant to paragraph (b)(1) of this section, need to be modified. At a minimum, this review should include a review of at least the following data, if available: Commercial catch data; current estimates of fishing mortality and catch-per-unit-effort (CPUE); discards; stock status; recent estimates of recruitment; virtual population analysis results and other estimates of stock size; sea sampling, port sampling, and survey data or, if sea sampling data are unavailable, length frequency information from port sampling and/or surveys; impact of other fisheries on the mortality of small-mesh multispecies; and any other relevant information.

(ii) If new and/or additional information becomes available, the Small-Mesh Multispecies PDT will consider it during this annual review. Based on this review, the Small-Mesh Multispecies PDT will provide guidance to the Whiting Oversight Committee and the Council regarding the need to adjust measures for the small-mesh multispecies fishery to better achieve the FMP's objectives. After considering this guidance, the Council may submit to NMFS its recommendations for changes to management measures, as appropriate, through the specifications process described in this section, the process specified in paragraph (c) of this section, or through an amendment to the FMP.

(4) *SAFE Report.* (i) The Small-Mesh Multispecies PDT will prepare a SAFE Report at least every 3 years. Based on the SAFE Report, the Small-Mesh Multispecies PDT will develop and present to the Council recommended specifications as defined in paragraph (a) of this section for up to 3 fishing years. The SAFE Report will be the primary vehicle for the presentation of all updated biological and socio-economic information regarding the small-mesh multispecies fishery. The SAFE Report will provide source data for any adjustments to the management measures that may be needed to continue to meet the goals and objectives of the FMP.

(ii) In any year in which a SAFE Report is not completed by the Small-Mesh Multispecies PDT, the annual review process described in paragraph (a) of this section will be used to recommend any necessary adjustments to specifications and/or management measures in the FMP.

(5) *Accountability measures for the small-mesh multispecies fishery*—(i) *In-season adjustment of possession limits.* If the Regional Administrator projects that 90 percent of a stock area TAL, as defined in § 648.90(b)(3), has been landed, the Regional Administrator shall reduce the possession limit of that stock to the incidental level, as specified in § 648.86(d)(4), for the remainder of the fishing year through notice consistent with the Administrative Procedure Act, unless such a reduction in the possession limit would be expected to prevent the TAL from being reached.

(ii) *Post-season adjustment for an overage.* If NMFS determines that a small-mesh multispecies ACL was exceeded in a given fishing year, the exact amount of the landings overage will be deducted, as soon as is practicable, from a subsequent single fishing year's ACL for that stock, through notification consistent with the Administrative Procedure Act.

(c) * * *

(1) * * *

(ii) *Adjustment process for whiting DAS.* The Council may develop recommendations for a whiting DAS effort reduction program through the framework process outlined in paragraph (c) of this section only if these options are accompanied by a full set of public hearings that span the area affected by the proposed measures in order to provide adequate opportunity for public comment.

* * * * *

[FR Doc. 2012–7710 Filed 3–29–12; 8:45 am]

BILLING CODE 3510–22–P

DEPARTMENT OF COMMERCE

National Oceanic and Atmospheric Administration

50 CFR Part 679

[Docket No. 111213751–2102–02]

RIN 0648–XB138

Fisheries of the Exclusive Economic Zone Off Alaska; Pacific Cod for American Fisheries Act Catcher/Processors Using Trawl Gear in the Bering Sea and Aleutian Islands Management Area

AGENCY: National Marine Fisheries Service (NMFS), National Oceanic and Atmospheric Administration (NOAA), Commerce.

ACTION: Temporary rule; closure.

SUMMARY: NMFS is prohibiting directed fishing for Pacific cod by American Fisheries Act (AFA) trawl catcher/processors in the Bering Sea and Aleutian Islands management area (BSAI). This action is necessary to prevent exceeding the B season allowance of the 2012 Pacific cod total allowable catch specified for AFA trawl catcher/processors in the BSAI.

DATES: Effective 1200 hrs, Alaska local time (A.l.t.), April 1, 2012, through 1200 hrs, A.l.t., June 10, 2012.

FOR FURTHER INFORMATION CONTACT: Obren Davis, 907–586–7228.

SUPPLEMENTARY INFORMATION: NMFS manages the groundfish fishery in the BSAI exclusive economic zone according to the Fishery Management Plan for Groundfish of the Bering Sea and Aleutian Islands Management Area (FMP) prepared by the North Pacific Fishery Management Council under authority of the Magnuson-Stevens Fishery Conservation and Management Act. Regulations governing fishing by U.S. vessels in accordance with the FMP appear at subpart H of 50 CFR part 600 and 50 CFR part 679.

The B season allowance of the 2012 Pacific cod total allowable catch (TAC) specified for AFA trawl catcher/processors in the BSAI is 1,340 metric tons (mt) as established by the final 2012 and 2013 harvest specifications for groundfish in the BSAI (77 FR 10669, February 23, 2012).

In accordance with § 679.20(d)(1)(i) and (d)(1)(ii)(B), the Administrator, Alaska Region, NMFS (Regional Administrator), has determined that the B season allowance of the 2012 Pacific cod TAC allocated to AFA trawl catcher/processors in the BSAI will be taken as incidental catch in the directed fishing for other species. Therefore, the

Regional Administrator is establishing a directed fishing allowance of 0 mt for Pacific cod allocated to AFA trawl catcher/processors in the BSAI, and is setting aside the remaining 1,340 mt as incidental catch to support other anticipated groundfish fisheries. In accordance with § 679.20(d)(1)(iii), the Regional Administrator finds that this directed fishing allowance has been reached. Consequently, NMFS is prohibiting directed fishing for Pacific cod by AFA trawl catcher/processors in the BSAI.

After the effective date of this closure the maximum retainable amounts at § 679.20(e) and (f) apply at any time during a trip.

Classification

This action responds to the best available information recently obtained from the fishery. The Acting Assistant Administrator for Fisheries, NOAA, (AA), finds good cause to waive the requirement to provide prior notice and opportunity for public comment pursuant to the authority set forth at 5 U.S.C. 553(b)(B) as such requirement is impracticable and contrary to the public interest. This requirement is impracticable and contrary to the public interest as it would prevent NMFS from responding to the most recent fisheries data in a timely fashion and would delay the closure of directed fishing for Pacific cod by AFA trawl catcher/processors in the BSAI. NMFS was unable to publish a notice providing time for public comment because the most recent, relevant data only became available as of March 26, 2012.

The AA also finds good cause to waive the 30-day delay in the effective date of this action under 5 U.S.C. 553(d)(3). This finding is based upon the reasons provided above for waiver of prior notice and opportunity for public comment.

This action is required by § 679.20 and is exempt from review under Executive Order 12866.

Authority: 16 U.S.C. 1801 *et seq.*

Dated: March 27, 2012.

Emily H. Menashes,

Acting Director, Office of Sustainable Fisheries, National Marine Fisheries Service.

[FR Doc. 2012–7711 Filed 3–27–12; 4:15 pm]

BILLING CODE 3510–22–P

DEPARTMENT OF COMMERCE

National Oceanic and Atmospheric Administration

50 CFR Part 679

[Docket No. 111207737–2141–02]

RIN 0648–XB113

Fisheries of the Exclusive Economic Zone Off Alaska; Pollock in the West Yakutat District in the Gulf of Alaska

AGENCY: National Marine Fisheries Service (NMFS), National Oceanic and Atmospheric Administration (NOAA), Commerce.

ACTION: Temporary rule; modification of a closure.

SUMMARY: NMFS is opening directed fishing for pollock in the West Yakutat District of the Gulf of Alaska (GOA). This action is necessary to fully use the 2012 total allowable catch of pollock in the West Yakutat District of the GOA.

DATES: Effective 1200 hrs, Alaska local time (A.l.t.), March 26, 2012, through 1200 hrs, A.l.t., August 25, 2012, and applicable beginning March 21, 2012. Comments must be received at the following address no later than 4:30 p.m., A.l.t., April 10, 2012.

ADDRESSES: You may submit comments, identified by NOAA–NMFS–2012–0069, by any one of the following methods:

- *Electronic Submission:* Submit all electronic public comments via the Federal e-Rulemaking Portal *www.regulations.gov*. To submit comments via the e-Rulemaking Portal, first click the ''submit a comment'' icon, then enter NOAA–NMFS–2012–0069 in the keyword search. Locate the document you wish to comment on from the resulting list and click on the ''Submit a Comment'' icon on that line.
- *Mail*: Address written comments to Glenn Merrill, Assistant Regional Administrator, Sustainable Fisheries Division, Alaska Region NMFS, Attn: Ellen Sebastian. Mail comments to P.O. Box 21668, Juneau, AK 99802–1668.
- *Fax:* Address written comments to Glenn Merrill, Assistant Regional Administrator, Sustainable Fisheries Division, Alaska Region NMFS, Attn: Ellen Sebastian. Fax comments to 907–586–7557.
- *Hand delivery to the Federal Building:* Address written comments to Glenn Merrill, Assistant Regional Administrator, Sustainable Fisheries Division, Alaska Region NMFS, Attn: Ellen Sebastian. Deliver comments to 709 West 9th Street, Room 420A, Juneau, AK.

Instructions: Comments must be submitted by one of the above methods to ensure that the comments are received, documented, and considered by NMFS. Comments sent by any other method, to any other address or individual, or received after the end of the comment period, may not be considered. All comments received are a part of the public record and will generally be posted for public viewing on *www.regulations.gov* without change. All personal identifying information (e.g., name, address) submitted voluntarily by the sender will be publicly accessible. Do not submit confidential business information, or otherwise sensitive or protected information. NMFS will accept anonymous comments (enter ''N/A'' in the required fields if you wish to remain anonymous). Attachments to electronic comments will be accepted in Microsoft Word or Excel, WordPerfect, or Adobe PDF file formats only.

FOR FURTHER INFORMATION CONTACT: Josh Keaton, 907–586–7228.

SUPPLEMENTARY INFORMATION: NMFS manages the groundfish fishery in the GOA exclusive economic zone according to the Fishery Management Plan for Groundfish of the Gulf of Alaska (FMP) prepared by the North Pacific Fishery Management Council under authority of the Magnuson-Stevens Fishery Conservation and Management Act. Regulations governing fishing by U.S. vessels in accordance with the FMP appear at subpart H of 50 CFR part 600 and 50 CFR part 679.

NMFS closed directed fishing for pollock in the West Yakutat District of the GOA under § 679.20(d)(1)(iii) on March 17, 2012 (77 FR 16481, March 21, 2012).

As of March 20, 2012, NMFS has determined that approximately 950 metric tons of pollock remain in the directed fishing allowance for pollock in the West Yakutat District of the GOA. Therefore, in accordance with § 679.25(a)(1)(i), (a)(2)(i)(C), and (a)(2)(iii)(D), and to fully utilize the 2012 TAC of pollock in the West Yakutat District of the GOA, NMFS is terminating the previous closure and is reopening directed fishing pollock in the West Yakutat District of the GOA.

The Administrator, Alaska Region (Regional Administrator) considered the following factors in reaching this decision: (1) The current catch of pollock in the West Yakutat District of the GOA and, (2) the harvest capacity and stated intent on future harvesting patterns of vessels in participating in this fishery.

Classification

This action responds to the best available information recently obtained

from the fishery. The Assistant Administrator for Fisheries, NOAA (AA), finds good cause to waive the requirement to provide prior notice and opportunity for public comment pursuant to the authority set forth at 5 U.S.C. 553(b)(B) as such requirement is impracticable and contrary to the public interest. This requirement is impracticable and contrary to the public interest as it would prevent NMFS from responding to the most recent fisheries data in a timely fashion and would delay the opening of the pollock fishery in the West Yakutat District of the GOA. Immediate notification is necessary to allow for the orderly conduct and efficient operation of this fishery, to allow the industry to plan for the fishing season, and to avoid potential disruption to the fishing fleet and processors. NMFS was unable to publish a notice providing time for public comment because the most recent, relevant data only became available as of March 20, 2012.

The AA also finds good cause to waive the 30-day delay in the effective date of this action under 5 U.S.C. 553(d)(3). This finding is based upon the reasons provided above for waiver of prior notice and opportunity for public comment.

Without this inseason adjustment, NMFS could not allow pollock fishery in West Yakutat District of the GOA to be harvested in an expedient manner and in accordance with the regulatory schedule. Under § 679.25(c)(2), interested persons are invited to submit written comments on this action to the above address until April 10, 2012.

This action is required by § 679.25 and is exempt from review under Executive Order 12866.

Authority: 16 U.S.C. 1801 *et seq.*

Dated: March 26, 2012.

Emily H. Menashes,

Acting Director, Office of Sustainable Fisheries, National Marine Fisheries Service.

[FR Doc. 2012–7577 Filed 3–26–12; 4:15 pm]

BILLING CODE 3510–22–P

DEPARTMENT OF COMMERCE

National Oceanic and Atmospheric Administration

50 CFR Part 679

[Docket No. 111207737–2141–02]

RIN 0648–XB122

Fisheries of the Economic Exclusive Zone Off Alaska; Shallow-Water Species Fishery by Vessels Using Trawl Gear in the Gulf of Alaska

AGENCY: National Marine Fisheries Service (NMFS), National Oceanic and Atmospheric Administration (NOAA), Commerce.

ACTION: Temporary rule; closure.

SUMMARY: NMFS is prohibiting directed fishing for species that comprise the shallow-water species fishery by vessels using trawl gear in the Gulf of Alaska (GOA). This action is necessary because the first seasonal apportionment of the Pacific halibut bycatch allowance specified for the shallow-water species fishery in the GOA has been reached.

DATES: Effective 1200 hrs, Alaska local time (A.l.t.), March 26, 2012, through 1200 hrs, A.l.t., April 1, 2012.

FOR FURTHER INFORMATION CONTACT: Obren Davis, 907–586–7228.

SUPPLEMENTARY INFORMATION: NMFS manages the groundfish fishery in the GOA exclusive economic zone according to the Fishery Management Plan for Groundfish of the Gulf of Alaska (FMP) prepared by the North Pacific Fishery Management Council under authority of the Magnuson-Stevens Fishery Conservation and Management Act. Regulations governing fishing by U.S. vessels in accordance with the FMP appear at subpart H of 50 CFR part 600 and 50 CFR part 679.

The first seasonal apportionment of the Pacific halibut bycatch allowance specified for the shallow-water species fishery in the GOA is 450 metric tons as established by the final 2012 and 2013 harvest specifications for groundfish of the GOA (77 FR 15194, March 14, 2012), for the period 1200 hrs, A.l.t., January 20, 2012, through 1200 hrs, A.l.t., April 1, 2012.

In accordance with § 679.21(d)(7)(i), the Administrator, Alaska Region, NMFS, has determined that the first seasonal apportionment of the Pacific halibut bycatch allowance specified for the trawl shallow-water species fishery in the GOA has been reached. Consequently, NMFS is prohibiting directed fishing for the shallow-water species fishery by vessels using trawl gear in the GOA. The species and species groups that comprise the shallow-water species fishery are pollock, Pacific cod, shallow-water flatfish, flathead sole, Atka mackerel, skates, squids, sharks, octopuses, and sculpins. This prohibition does not apply to fishing for pollock by vessels using pelagic trawl gear in those portions of the GOA open to directed fishing for pollock.

After the effective date of this closure the maximum retainable amounts at § 679.20(e) and (f) apply at any time during a trip.

Classification

This action responds to the best available information recently obtained from the fishery. The Assistant Administrator for Fisheries, NOAA (AA), finds good cause to waive the requirement to provide prior notice and opportunity for public comment pursuant to the authority set forth at 5 U.S.C. 553(b)(B) as such requirement is impracticable and contrary to the public interest. This requirement is impracticable and contrary to the public interest as it would prevent NMFS from responding to the most recent fisheries data in a timely fashion and would delay the closure of the shallow-water species fishery by vessels using trawl gear in the GOA. NMFS was unable to publish a notice providing time for public comment because the most recent, relevant data only became available as of March 23, 2012.

The AA also finds good cause to waive the 30-day delay in the effective date of this action under 5 U.S.C. 553(d)(3). This finding is based upon the reasons provided above for waiver of prior notice and opportunity for public comment.

This action is required by § 679.21 and is exempt from review under Executive Order 12866.

Authority: 16 U.S.C. 1801 *et seq.*

Dated: March 26, 2012.

Emily H. Menashes,

Acting Director, Office of Sustainable Fisheries, National Marine Fisheries Service.

[FR Doc. 2012–7581 Filed 3–26–12; 4:15 pm]

BILLING CODE 3510–22–P

DEPARTMENT OF COMMERCE

National Oceanic and Atmospheric Administration

50 CFR Part 679

[Docket No. 111213751–2102–02]

RIN 0648–XB118

Fisheries of the Exclusive Economic Zone Off Alaska; Pacific Cod by Catcher Vessels Using Trawl Gear in the Bering Sea and Aleutian Islands Management Area

AGENCY: National Marine Fisheries Service (NMFS), National Oceanic and Atmospheric Administration (NOAA), Commerce.

ACTION: Temporary rule; modification of a closure.

SUMMARY: NMFS is opening directed fishing for Pacific cod by catcher vessels using trawl gear in the Bering Sea and Aleutian Islands management area (BSAI). This action is necessary to fully use the A season apportionment of the 2012 Pacific cod total allowable catch (TAC) allocated to trawl catcher vessels in the BSAI.

DATES: Effective 1200 hrs, Alaska local time (A.l.t.), March 29, 2012, through 1200 hrs, A.l.t., April 1, 2012. Comments must be received at the following address no later than 4:30 p.m., A.l.t., April 10, 2012.

ADDRESSES: You may submit comments, identified by NOAA–NMFS–2012–0073, by any one of the following methods:

- *Electronic Submission:* Submit all electronic public comments via the Federal e-Rulemaking Portal *www.regulations.gov.* To submit comments via the e-Rulemaking Portal, first click the ''submit a comment'' icon, then enter NOAA–NMFS–2012–0073 in the keyword search. Locate the document you wish to comment on from the resulting list and click on the ''Submit a Comment'' icon on that line.
- *Mail:* Address written comments to Glenn Merrill, Assistant Regional Administrator, Sustainable Fisheries Division, Alaska Region NMFS, Attn: Ellen Sebastian. Mail comments to P.O. Box 21668, Juneau, AK 99802–1668.
- *Fax:* Address written comments to Glenn Merrill, Assistant Regional Administrator, Sustainable Fisheries Division, Alaska Region NMFS, Attn: Ellen Sebastian. Fax comments to 907–586–7557.
- *Hand delivery to the Federal Building:* Address written comments to Glenn Merrill, Assistant Regional Administrator, Sustainable Fisheries Division, Alaska Region NMFS, Attn: Ellen Sebastian. Deliver comments to 709 West 9th Street, Room 420A, Juneau, AK.

Instructions: Comments must be submitted by one of the above methods to ensure that the comments are received, documented, and considered by NMFS. Comments sent by any other method, to any other address or individual, or received after the end of the comment period, may not be considered. All comments received are a part of the public record and will generally be posted for public viewing on *www.regulations.gov* without change. All personal identifying information (e.g., name, address) submitted voluntarily by the sender will be publicly accessible. Do not submit confidential business information, or otherwise sensitive or protected information. NMFS will accept anonymous comments (enter ''N/A'' in the required fields if you wish to remain anonymous). Attachments to electronic comments will be accepted in Microsoft Word or Excel, WordPerfect, or Adobe PDF file formats only.

FOR FURTHER INFORMATION CONTACT: Josh Keaton, 907–586–7228.

SUPPLEMENTARY INFORMATION: NMFS manages the groundfish fishery in the GOA exclusive economic zone according to the Fishery Management Plan for Groundfish of the Gulf of Alaska (FMP) prepared by the North Pacific Fishery Management Council under authority of the Magnuson-Stevens Fishery Conservation and Management Act. Regulations governing fishing by U.S. vessels in accordance with the FMP appear at subpart H of 50 CFR part 600 and 50 CFR part 679.

NMFS closed directed fishing for Pacific cod by catcher vessels using trawl gear in the BSAI under § 679.20(d)(1)(iii) on February 29, 2012 (77 FR 13013, March 5, 2012).

As of March 21, 2012, NMFS has determined that approximately 3,000 metric tons of Pacific cod remain in the 2012 A season directed fishing allowance allocated to trawl catcher vessels in the BSAI. Therefore, in accordance with § 679.25(a)(1)(i), (a)(2)(i)(C), and (a)(2)(iii)(D), and to fully utilize the A season apportionment of the 2012 Pacific cod TAC allocated to trawl catcher vessels in the BSAI, NMFS is terminating the previous closure and is reopening directed fishing for Pacific cod by catcher vessels using trawl gear in the BSAI.

The Administrator, Alaska Region (Regional Administrator) considered the following factors in reaching this decision: (1) The current catch for Pacific cod by catcher vessels using trawl gear in the BSAI, and (2) the harvest capacity and stated intent on future harvesting patterns of vessels in participating in this fishery.

Classification

This action responds to the best available information recently obtained from the fishery. The Assistant Administrator for Fisheries, NOAA (AA), finds good cause to waive the requirement to provide prior notice and opportunity for public comment pursuant to the authority set forth at 5 U.S.C. 553(b)(B) as such requirement is impracticable and contrary to the public interest. This requirement is impracticable and contrary to the public interest as it would prevent NMFS from responding to the most recent fisheries data in a timely fashion and would delay the opening of directed fishing for Pacific cod by catcher vessels using trawl gear in the BSAI. Immediate notification is necessary to allow for the orderly conduct and efficient operation of this fishery, to allow the industry to plan for the fishing season, and to avoid potential disruption to the fishing fleet and processors. NMFS was unable to publish a notice providing time for public comment because the most recent, relevant data only became available as of March 21, 2012.

The AA also finds good cause to waive the 30-day delay in the effective date of this action under 5 U.S.C. 553(d)(3). This finding is based upon the reasons provided above for waiver of prior notice and opportunity for public comment.

Without this inseason adjustment, NMFS could not allow Pacific cod fishery by catcher vessels using trawl gear in the BSAI to be harvested in an expedient manner and in accordance with the regulatory schedule. Under § 679.25(c)(2), interested persons are invited to submit written comments on this action to the above address until April 10, 2012.

This action is required by § 679.25 and is exempt from review under Executive Order 12866.

Authority: 16 U.S.C. 1801 *et seq.*

Dated: March 26, 2012.

Emily H. Menashes,

Acting Director, Office of Sustainable Fisheries, National Marine Fisheries Service.

[FR Doc. 2012–7583 Filed 3–26–12; 4:15 pm]

BILLING CODE 3510–22–P

Proposed Rules

Federal Register
Vol. 77, No. 62
Friday, March 30, 2012

This section of the FEDERAL REGISTER contains notices to the public of the proposed issuance of rules and regulations. The purpose of these notices is to give interested persons an opportunity to participate in the rule making prior to the adoption of the final rules.

DEPARTMENT OF TRANSPORTATION

Federal Aviation Administration

14 CFR Part 25

[Docket No. FAA–2012–0343; Notice No. 25–460–SC]

Special Conditions: Airbus, A350–900 Series Airplane; Crew Rest Compartments

AGENCY: Federal Aviation Administration (FAA), DOT.

ACTION: Notice of proposed special conditions.

SUMMARY: This action proposes special conditions for Airbus A350–900 series airplanes. These airplanes will have novel or unusual design features associated with two separate Crew Rest Compartments: a Flight Crew Rest Compartment (FCRC) intended to be occupied by flight crew members only, and a Cabin Crew Rest Compartment (CCRC) intended to be occupied by cabin crew members. Both types of Crew Rest Compartments (CRC) are installed in the overhead area with access from the main deck. The applicable airworthiness regulations do not contain adequate or appropriate safety standards for this design feature. These proposed special conditions contain the additional safety standards that the Administrator considers necessary to establish a level of safety equivalent to that established by the existing airworthiness standards.

DATES: We must receive your comments by May 14, 2012.

ADDRESSES: Send comments identified by docket number FAA–2012–0343 using any of the following methods:

- *Federal eRegulations Portal:* Go to *http://www.regulations.gov/* and follow the online instructions for sending your comments electronically.
- *Mail:* Send comments to Docket Operations, M–30, U.S. Department of Transportation (DOT), 1200 New Jersey Avenue SE., Room W12–140, West Building Ground Floor, Washington, DC 20590–0001.
- *Hand Delivery or Courier:* Take comments to Docket Operations in Room W12–140 of the West Building Ground Floor at 1200 New Jersey Avenue SE., Washington, DC, between 8 a.m. and 5 p.m., Monday through Friday, except federal holidays.
- *Fax:* Fax comments to Docket Operations at 202–493–2251.

Privacy: The FAA will post all comments it receives, without change, to *http://www.regulations.gov/*, including any personal information the commenter provides. Using the search function of the docket web site, anyone can find and read the electronic form of all comments received into any FAA docket, including the name of the individual sending the comment (or signing the comment for an association, business, labor union, etc.). DOT's complete Privacy Act Statement can be found in the **Federal Register** published on April 11, 2000 (65 FR 19477–19478), as well as at *http://DocketsInfo.dot.gov/*.

Docket: Background documents or comments received may be read at *http://www.regulations.gov/* at any time. Follow the online instructions for accessing the docket or go to the Docket Operations in Room W12–140 of the West Building Ground Floor at 1200 New Jersey Avenue SE., Washington, DC, between 9 a.m. and 5 p.m., Monday through Friday, except federal holidays.

FOR FURTHER INFORMATION CONTACT: Jeff Gardlin, FAA, Airframe/Cabin Safety, ANM–115, Transport Airplane Directorate, Aircraft Certification Service, 1601 Lind Avenue SW., Renton, Washington, 98057–3356; telephone (425) 227–2136; facsimile (425) 227–1320.

SUPPLEMENTARY INFORMATION:

Comments Invited

We invite interested people to take part in this rulemaking by sending written comments, data, or views. The most helpful comments reference a specific portion of the special conditions, explain the reason for any recommended change, and include supporting data. We ask that you send us two copies of written comments.

We will file in the docket all comments we receive, as well as a report summarizing each substantive public contact with FAA personnel concerning these special conditions. You can inspect the docket before and after the comment closing date. If you wish to review the docket in person, go to the address in the **ADDRESSES** section of this preamble between 7:30 a.m. and 4 p.m., Monday through Friday, except Federal holidays.

We will consider all comments we receive on or before the closing date for comments. We will consider comments filed late if it is possible to do so without incurring expense or delay. We may change these special conditions based on the comments we receive.

If you want us to acknowledge receipt of your comments on this proposal, include with your comments a self-addressed, stamped postcard on which you have written the docket number. We will stamp the date on the postcard and mail it back to you.

Background

On August 25, 2008, Airbus applied for a type certificate for their new A350–900 series airplane. Later, Airbus requested and the FAA approved an extension to the application for FAA type certification to June 28, 2009. The A350–900 series has a conventional layout with twin wing-mounted Rolls Royce Trent engines. It features a twin aisle 9-abreast economy class layout, and accommodates side-by-side placement of LD–3 containers in the cargo compartment. The basic A350–900 series configuration will accommodate 315 passengers in a standard two-class arrangement. The design cruise speed is Mach 0.85 with a Maximum Take-Off Weight of 591,000 lbs. Airbus proposes the A350–900 series to be certified for extended operations (ETOPS) beyond 180 minutes at entry into service for up to a 420-minute maximum diversion time.

Crew rest compartments have been previously installed and certificated on several Airbus airplane models (as well as those of other manufacturers) in various locations including the main passenger seating area, and the overhead space above the main passenger cabin seating area. In each case, the FAA determined that the applicable Title 14 Code of Federal Regulations (14 CFR) sections did not provide all of the necessary requirements because each installation had unique features by virtue of its design, location, and use on the airplane. When the FAA finds that the applicable airworthiness regulations

do not contain adequate or appropriate safety standards because of a novel or unusual design feature, special conditions are prescribed under the provisions of § 21.16. The special conditions contain safety standards that the FAA considers necessary to establish a level of safety equivalent to that established by the existing airworthiness standards.

The FAA has previously written special conditions to address crew rest compartment installations in various locations for various models. These special conditions have been very similar in content, but the particular details of a given installation have resulted in differences between the actual special conditions. The FAA has used the experience gained over time from prior special conditions to refine and enhance the special conditions proposed in this special condition. In the case of the A350–900 series, these proposed special conditions reflect the knowledge gained from those programs and therefore have some differences in wording from prior Airbus special conditions, even though the overall intent of the proposed special conditions is essentially the same.

Type Certification Basis

Under Title 14, Code of Federal Regulations (14 CFR) 21.17, Airbus must show that the A350–900 series airplane meets the applicable provisions of 14 CFR part 25, as amended by Amendments 25–1 through 25–128.

If the Administrator finds that the applicable airworthiness regulations (i.e., 14 CFR part 25) do not contain adequate or appropriate safety standards for the A350–900 series airplane because of a novel or unusual design feature, special conditions are prescribed under § 21.16.

Special conditions are initially applicable to the model for which they are issued. Should the type certificate for that model be amended later to include any other model that incorporates the same or similar novel or unusual design feature, the special conditions would also apply to the other model under § 21.101.

In addition to the applicable airworthiness regulations and special conditions, the A350–900 series must comply with the fuel vent and exhaust emission requirements of 14 CFR part 34 and the noise certification requirements of 14 CFR part 36. The FAA must also issue a finding of regulatory adequacy under § 611 of Public Law 92–574, the ''Noise Control Act of 1972.''

The FAA issues special conditions, as defined in 14 CFR 11.19, under § 11.38, and they become part of the type-certification basis under § 21.17(a)(2).

Novel or Unusual Design Features

The Airbus A350–900 series will incorporate the following novel or unusual design features: two separate Crew Rest Compartments in the overhead area accessible from the main deck. The FCRC is intended to be occupied by flight crew members only, and a CCRC is intended to be occupied by cabin crew members only. These compartments are unique to part 25 because of their design, location, and use on the airplane. Because of the novel or unusual features associated with installation of these compartments, special conditions are considered necessary to provide a level of safety equal to that established by the airworthiness regulations.

Discussion

Compliance with these special conditions does not ensure that the applicant has demonstrated compliance with the requirements of 14 CFR part 91, 121, or 135.

In order to obtain an operational evaluation, the type design holder must contact the appropriate Aircraft Evaluation Group (AEG) in the Flight Standards Service and request an evaluation for operational suitability of the flight crew sleeping quarters in their crew rest facility. Results of these evaluations should be documented and appended to the A350 Flight Standardization Board (FSB) Report. Individual operators may reference these standardized evaluations in discussions with their FAA Principal Operating Inspector (POI) as the basis for an operational approval, in lieu of an on-site operational evaluation.

Any changes to the approved overhead crew rest compartment configuration that affect crewmember emergency egress or any other procedures affecting the safety of the occupying crewmembers and/or related training shall require a re-evaluation and approval. The applicant for a crew rest design change that affects egress, safety procedures, or training is responsible for notifying the FAA's AEG that a new crew rest facility evaluation is required.

Procedures must be developed to assure that a crewmember entering the overhead crew rest compartment through the vestibule to fight a fire will examine the vestibule and the lavatory areas for the source of the fire prior to entering the remaining areas of the crew rest compartment. These procedures are intended to assure that the source of the fire is not between the crewmember and the primary exit. In the event a fire source is not immediately self-evident to the firefighter, the firefighter should check for potential fire sources at areas closest to the primary exit first, then proceed to check areas in such a manner that the fire source, when found, would not be between the firefighter and the primary exit. Procedures describing methods to search the overhead crew rests for fire source(s) must be transmitted to the operator for incorporation into their training programs and appropriate operational manuals.

Applicability

As discussed above, these special conditions apply to the A350–900 series airplanes. Should Airbus apply later for a change to the type certificate to include another model incorporating the same novel or unusual design feature, the special conditions would apply to that model as well.

Conclusion

This action affects only certain novel or unusual design features on the Airbus A350–900 series airplanes. It is not a rule of general applicability.

List of Subjects in 14 CFR Part 25

Aircraft, Aviation safety, Reporting and recordkeeping requirements.

The authority citation for these special conditions is as follows:

Authority: 49 U.S.C. 106(g), 40113, 44701, 44702, 44704.

The Proposed Special Conditions

Accordingly, the Federal Aviation Administration (FAA) proposes the following special conditions as part of the type certification basis for Airbus A350–900 series airplanes.

1. Occupancy of the overhead crew rest compartment is limited to the total number of installed bunks and seats in each compartment, and is not allowed for taxi, takeoff and landing. There must be an approved seat or berth able to withstand the maximum flight loads when occupied for each occupant permitted in the overhead crew rest compartment. In addition, the maximum occupancy in the overhead crew rest compartment may be limited as necessary to provide the required level of safety.

(a) There must be appropriate placards, inside and outside each entrance to the overhead crew rest compartment to indicate:

(1) The maximum number of occupants allowed,

(2) That occupancy is restricted to crewmembers who are trained in the

evacuation procedures for the overhead crew rest compartment,

(3) That occupancy is prohibited during taxi, take-off and landing,

(4) That smoking is prohibited in the overhead crew rest compartment, and

(5) That stowage in the crew rest compartment area is limited to crew personal luggage. The stowage of cargo or passenger baggage is not allowed.

(b) There must be at least one ashtray on the inside and outside of any entrance to the overhead crew rest compartment.

(c) There must be a means to prevent passengers from entering the overhead crew rest compartment in the event of an emergency or when no flight attendant is present.

(d) There must be a means for any door installed between the overhead crew rest compartment and passenger cabin to be capable of being quickly opened from inside the compartment, even when crowding occurs at each side of the door.

(e) For all doors installed, there must be a means to preclude anyone from being trapped inside the overhead crew rest compartment. If a locking mechanism is installed, it must be capable of being unlocked from the outside without the aid of special tools. The lock must not prevent the compartment from being opened from the inside at any time.

(f) The means of opening doors and hatches to the overhead crew rest compartment must be simple and obvious. In addition, doors or hatches that separate the overhead crew rest compartment from the main deck must not adversely affect evacuation of occupants on the main deck (slowing evacuation by encroaching into aisles in a way that is not easily reversible, for example) or cause injury to those occupants during opening or while opened.

2. There must be at least two emergency evacuation routes, which could be used by each occupant of the overhead crew rest compartment to evacuate rapidly to the main cabin.

(a) The routes must also be able to be closed from the main passenger cabin after evacuation. In addition, the routes must be located with sufficient separation within the overhead crew rest compartment to minimize the possibility of an event either inside or outside of the crew rest compartment which would render both routes inoperative.

Compliance to the requirements of proposed special condition no. 2. may be shown by inspection or by analysis. Regardless which method is used, the maximum acceptable exit separation is 60 feet measured between exit openings.

Compliance by Inspection

An overhead crew rest compartment less than 60 feet in length in which the evacuation routes are located such that each occupant of the seats and berths has an unobstructed route to at least one of the evacuation routes regardless of the location of a fire would be acceptable by inspection. A fire within a berth that only blocks the occupant of that berth from exiting the berth need not be considered. Therefore, exits which are located at absolute opposite ends (i.e., adjacent to opposite end walls) of the crew rest would require no further review or analysis with regard to exit separation.

Compliance by Analysis

Analysis must show the overhead crew rest compartment configuration and interior features provide for all occupants of the overhead crew rest to escape the compartment in the event of a hazard inside or outside of the compartment. Elements to consider in this evaluation are as follows:

(1) Fire inside or outside the overhead crew rest compartment considered separately and the design elements used to reduce the available fuel for the fire,

(2) Design elements to reduce the fire ignition sources in the overhead crew rest compartment,

(3) Distribution and quantity of emergency equipment within the overhead crew rest compartment,

(4) Structural failure or deformation of components that could block access to the available evacuation routes (*e.g.,* seats, folding berths, contents of stowage compartments, etc.,

(5) An incapacitated person blocking the evacuation routes,

(6) Any other foreseeable hazard not identified above that could cause the evacuation routes to be compromised.

Analysis must consider design features affecting access to the evacuation routes. The design features that should be considered include, but are not limited to, seat-back break-over, the elimination of rigid structure that reduces access from one part of the compartment to another, the elimination of items that are known to be the cause of potential hazards, the availability of emergency equipment to address fire hazards, the availability of communications equipment, supplemental restraint devices to retain items of mass that could hinder evacuation if broken loose, and load path isolation between components that contain the evacuation routes.

Analysis of the fire threats should be used in determining the placement of required fire extinguishers and protective breathing equipment (PBEs) and should consider the possibility of fire in any location in the overhead crew rest compartment. The location and quantity of PBEs and fire extinguishers should allow occupants located in any approved seats or berths access to the equipment necessary to fight a fire in the overhead crew rest compartment.

The intent of this proposed special condition is to provide sufficient exit separation. The exit separation analysis described above should not be used to approve exits which have less physical separation (measured between the centroid of each exit opening) than the minimums prescribed below, unless compensating features are identified and submitted to the FAA for evaluation and approval.

For overhead crew rest compartments with one exit located near the forward or aft end of an overhead crew rest compartment, as measured by having the centroid of the exit opening within 20 percent of the forward or aft end of the total overhead crew rest compartment length, the exit separation should not be less than 50 percent of the total overhead crew rest compartment length.

For overhead crew rest compartments with neither required exit located near the forward or aft end of the overhead crew rest compartment, as measured by not having the centroid of either exit opening within 20 percent of the forward or aft end of the total overhead crew rest compartment length, the exit separation should not be less than 30 percent of the total overhead crew rest compartment length.

(b) The routes must be designed to minimize the possibility of blockage, which might result from fire, mechanical or structural failure, or persons standing below or against the escape route. One of the evacuation routes should not be located where normal movement by passengers, such as in the main aisle, cross aisle or galley complex, would impede egress from the overhead crew rest compartment when it is occupied. If an evacuation route utilizes an area where normal movement of passengers occurs, it must be demonstrated that passengers would not impede egress to the main deck. If there is low headroom at or near the evacuation route, provisions must be made to prevent or to protect occupants of the overhead crew rest compartment from head injury. The use of evacuation routes must not be dependent on any powered device. If the evacuation path is over an area where there are

passenger seats, a maximum of five passengers may be displaced from their seats temporarily during the evacuation process of an incapacitated person(s). If the evacuation procedure involves the evacuee stepping on seats, the seats must not be damaged to the extent that they would not be acceptable for occupancy during an emergency landing.

(c) Emergency evacuation procedures, including the emergency evacuation of an incapacitated occupant from the overhead crew rest compartment, must be established. All of these procedures must be transmitted to the operator for incorporation into their training programs and appropriate operational manuals.

(d) There must be a limitation in the Airplane Flight Manual or other suitable means requiring that crewmembers be trained in the use of all evacuation routes.

3. There must be a means for the evacuation of an incapacitated person, representative of a ninety-fifth percentile male, from the overhead crew rest compartment to the passenger cabin floor.

(a) The evacuation must be demonstrated for all evacuation routes. One person, e.g., a crewmember or assistant, within the overhead crew rest compartment may provide assistance in the evacuation. Additional assistance may be provided by up to three persons in the main passenger compartment. These additional assistants must be standing on the floor while providing assistance.

(b) For evacuation routes having stairways, the additional assistants may ascend up to one half the elevation change from the main deck to the overhead crew rest compartment, or to the first landing, whichever is lower.

4. The following signs and placards must be provided in the overhead crew rest compartment:

(a) At least one exit sign meeting the requirements of § 25.812(b)(1)(i) must be located near each exit. One allowable exception is utilization of a sign with reduced background area of no less than 5.3 square inches (excluding the letters), provided that it is installed such that the material surrounding the exit sign is light in color (e.g., white, cream, light beige). If the material surrounding the exit sign is not light in color, a sign with a minimum of a one-inch wide background border around the letters would also be acceptable. Another allowable exception is a sign with a symbol that the FAA has determined to be equivalent for use as an exit sign in an overhead crew rest compartment.

(b) An appropriate placard located near each exit defining the location and the operating instructions for each evacuation route.

(c) Placards must be readable from a distance of 30 inches under emergency lighting conditions.

(d) The exit handles and evacuation path operating instruction placards must be illuminated to at least 160 microlamberts under emergency lighting conditions.

5. If the aircraft's main power system fails, or of the normal overhead crew rest compartment lighting system fails, there must be a means for emergency illumination to be automatically provided for the overhead crew rest compartment.

(a) This emergency illumination must be independent of the main lighting system.

(b) The sources of general cabin illumination may be common to both the emergency and the main lighting systems if the power supply to the emergency lighting system is independent of the power supply to the main lighting system.

(c) The illumination level must be sufficient for the occupants of the overhead crew rest compartment to locate and transfer to the main passenger cabin floor by means of each evacuation route.

6. There must be means for two-way voice communications between crewmembers on the flight deck and occupants of the overhead crew rest compartment. There must also be two-way communications between the occupants of the overhead crew rest compartment and each flight attendant station required to have a public address system microphone per § 25.1423(g) in the passenger cabin. In addition, the public address system must include provisions to provide only the relevant information to the flight crewmembers in the overhead crew rest compartment (e.g., fire in flight, aircraft depressurization, preparation of the compartment occupants for landing.).

7. There must be a means for manual activation of an aural emergency alarm system, audible during normal and emergency conditions, to enable crewmembers on the flight deck and at each pair of required floor level emergency exits to alert occupants of the overhead crew rest compartment of an emergency situation. Use of a public address or crew interphone system will be acceptable, provided an adequate means of differentiating between normal and emergency communications is incorporated. The system must be powered in flight, after the shutdown or failure of all engines and auxiliary power units, for a period of at least ten minutes.

8. There must be a means, readily detectable by seated or standing occupants of the overhead crew rest compartment, which indicates when seat belts should be fastened. In the event there are no seats, at least one means must be provided to cover anticipated turbulence such as sufficient handholds. Seat belt type restraints must be provided for berths and must be compatible for the sleeping attitude during cruise conditions. There must be a placard on each berth requiring that seat belts must be fastened when occupied. If compliance with any of the other requirements of these special conditions is predicated on specific head location, there must be a placard identifying the head position.

9. In lieu of the requirements specified in § 25.1439(a) that pertain to isolated compartments and to providing a level of safety equivalent to that for occupants of an isolated galley, the following equipment must be provided in the overhead crew rest compartment:

(a) At least one approved hand-held fire extinguisher appropriate for the kinds of fires likely to occur,

(b) Two Protective Breathing Equipment (PBE) devices approved to Technical Standard Order (TSO)–C116 or equivalent, suitable for firefighting, or one PBE for each hand-held fire extinguisher, whichever is greater, and

(c) One flashlight.

Note: Additional PBEs and fire extinguishers in specific locations, beyond the minimum numbers prescribed in Special Condition No. 9 may be required as a result of the egress analysis accomplished to satisfy Special Condition No. 2(a).

10. A smoke or fire detection system or systems must be provided that monitors each occupiable area within the overhead crew rest compartment, including those areas partitioned by curtains. Flight tests must be conducted to show compliance with this requirement. Each system or systems must provide:

(a) A visual indication to the flightdeck within one minute after the start of a fire;

(b) An aural warning in the overhead crew rest compartment; and

(c) A warning in the main passenger cabin. This warning must be readily detectable by a flight attendant, considering the positioning of flight attendants throughout the main passenger compartment during various phases of flight.

11. The overhead crew rest compartment must be designed such that fires within the compartment can

be controlled without a crewmember having to enter the compartment, or the design of the access provisions must allow crewmembers equipped for firefighting to have unrestricted access to the compartment. The time for a crewmember on the main deck to react to the fire alarm, to don the firefighting equipment, and to gain access must not exceed the time for the compartment to become smoke-filled, making it difficult to locate the fire source. Procedures describing methods to search the overhead crew rests for fire sources(s) must be established. These procedures must be transmitted to the operator for incorporation into their training programs and appropriate operational manuals.

12. There must be a means provided to exclude hazardous quantities of smoke or extinguishing agent originating in the overhead crew rest compartment from entering any other compartment occupied by crewmembers or passengers. This means must include the time periods during the evacuation of the overhead crew rest compartment and, if applicable, when accessing the overhead crew rest compartment to manually fight a fire. Smoke entering any other compartment occupied by crewmembers or passengers when the access to the overhead crew rest compartment is opened, during an emergency evacuation, must dissipate within five minutes after the access to the overhead crew rest compartment is closed. Hazardous quantities of smoke may not enter any other compartment occupied by crewmembers or passengers during subsequent access to manually fight a fire in the overhead crew rest compartment (the amount of smoke entrained by a firefighter exiting the overhead crew rest compartment through the access is not considered hazardous). During the one-minute smoke detection time, penetration of a small quantity of smoke from the overhead crew rest compartment into an occupied area is acceptable. Flight tests must be conducted to show compliance with this requirement.

There must be a provision in the firefighting procedures to ensure that all door(s) and hatch(es) at the crew rest compartment outlets are closed after evacuation of the crew rest compartment and during firefighting to minimize smoke and extinguishing agent from entering other occupiable compartments.

If a built-in fire extinguishing system is used in lieu of manual firefighting, then the fire extinguishing system must be designed so that no hazardous quantities of extinguishing agent will enter other compartments occupied by passengers or crew. The system must have adequate capacity to suppress any fire occurring in the overhead crew rest compartment, considering the fire threat, volume of the compartment, and the ventilation rate.

13. There must be a supplemental oxygen system within the crew rest compartment as follows:

(a) There must be at least one mask for each seat and for each berth in the crew rest compartment.

(b) If a destination area, such as a changing area, is provided in the overhead crew rest compartment, there must be an oxygen mask readily available for each occupant that can reasonably be expected to be in the destination area. The maximum number of required masks within the destination area is limited to the placarded maximum occupancy of the crew rest.

(c) There must also be an oxygen mask readily accessible to each occupant that can reasonably be expected to be either transitioning from the main cabin into the crew rest compartment, transitioning within the crew rest compartment, or transitioning from the crew rest compartment to the main cabin.

(d) The system must provide an aural and visual alert to warn the occupants of the overhead crew rest compartment to don oxygen masks if there is a decompression. The aural and visual alerts must activate concurrently with the deployment of the oxygen masks in the passenger cabin. To compensate for sleeping occupants, the aural alert must be heard in each section of the overhead crew rest compartment and must sound continuously for a minimum of five minutes or until a reset switch within the overhead crew rest compartment is activated. A visual alert that informs occupants that they must don an oxygen mask must be visible in each section.

(e) There must also be a means by which the oxygen masks can be manually deployed from the flight deck.

(f) Decompression procedures for crew rest occupants must be established. These procedures must be transmitted to the operator for incorporation into their training programs and appropriate operational manuals.

(g) The supplemental oxygen system for the crew rest shall meet the same 14 CFR part 25 regulations as the supplemental oxygen system for the passenger cabin occupants except for the 10 percent additional masks requirement of § 25.1447(c)(1).

(h) The illumination level of the normal overhead crew rest compartment lighting system must automatically be sufficient for each occupant of the compartment to locate a deployed oxygen mask.

14. The following requirements apply to overhead crew rest compartments that are divided into sections by curtains or partitions:

(a) A placard is required adjacent to each curtain that visually divides or separates, for privacy purposes, the overhead crew rest compartment into small sections. The placard must require that the curtain(s) remains open when the private section it creates is unoccupied. The vestibule section adjacent to the stairway is not considered a private area and, therefore, does not require a placard.

(b) For each section of the overhead crew rest compartment created by a curtain, the following requirements of these special conditions must be met with the curtain open or closed:

(1) No smoking placard (Special Condition No. 1),

(2) Emergency illumination (Special Condition No. 5),

(3) Emergency alarm system (Special Condition No. 7),

(4) Seat belt fasten signal or return to seat signal as applicable (Special Condition No. 8),

(5) The smoke or fire detection system (Special Condition No. 10), and

(6) The oxygen system (Special Condition No. 13).

(c) Overhead crew rest compartments visually divided to the extent that evacuation could be affected must have exit signs that direct occupants to the primary stairway exit. The exit signs must be provided in each separate section of the overhead crew rest compartment, except for curtained bunks, and must meet the requirements of § 25.812(b)(1)(i). An exit sign with reduced background area or a symbolic exit sign as described in Special Condition No. 4(a) may be used to meet this requirement.

(d) For sections within an overhead crew rest compartment with a rigid partition with a door physically separating the sections, the following requirements of these special conditions must be met with the door open or closed:

(1) There must be a secondary evacuation route from each section to the main deck, or alternatively, it must be shown that any door between the sections has been designed to preclude anyone from being trapped inside the compartment. Removal of an incapacitated occupant within this area must be considered. A secondary evacuation route from a small room designed for only one occupant for short time duration, such as a changing area or lavatory, is not required. However,

removal of an incapacitated occupant from a small room, such as a changing area or lavatory, must be considered.

(2) Any door between the sections must be shown to be openable when crowded against, even when crowding occurs at each side of the door.

(3) There may be no more than one door between any seat or berth and the primary stairway exit.

(4) There must be exit signs in each section meeting the requirements of § 25.812(b)(1)(i), or shown to have an Equivalent Level of Safety, that direct occupants to the primary stairway exit. An exit sign with reduced background area or a symbolic exit sign as described in Special Condition No. 4(a) may be used to meet this requirement.

(e) For each smaller section within the main overhead crew rest compartment created by the installation of a partition with a door, the following requirements of these special conditions must be met with the door open or closed:

(1) No smoking placards (Special Condition No. 1);

(2) Emergency illumination (Special Condition No. 5);

(3) Two-way voice communication (Special Condition No. 6);

(4) Emergency alarm system (Special Condition No. 7);

(5) Seat belt fasten signal or return to seat signal as applicable (Special Condition No. 8);

(6) Emergency firefighting and protective equipment (Special Condition No. 9);

(7) Smoke or fire detection system (Special Condition No. 10), and

(8) The oxygen system (Special Condition No. 13).

15. The requirements of two-way voice communication with the flight deck and provisions for emergency firefighting and protective equipment are not applicable to lavatories or other small areas that are not intended to be occupied for extended periods of time.

16. Where a waste disposal receptacle is fitted, it must be equipped with an automatic fire extinguisher that meets the performance requirements of § 25.854(b).

17. Materials (including finishes or decorative surfaces applied to the materials) must comply with the flammability requirements of § 25.853(a) as amended by Amendment 25–116. Mattresses must comply with the flammability requirements of § 25.853(c), as amended by Amendment 25–116.

18. The addition of a lavatory within the overhead crew rest compartment would require the lavatory to meet the same requirements as those for a lavatory installed on the main deck except with regard to Special Condition No. 10 for smoke detection.

19. Each stowage compartment in the crew rest compartment, except for underseat compartments for occupant convenience, must be completely enclosed. All enclosed stowage compartments within the overhead crew rest compartment that are not limited to stowage of emergency equipment or airplane supplied equipment such as bedding must meet the design criteria given in the table below. Enclosed stowage compartments greater than 200 ft^3 in interior volume are not addressed by this special condition. The in-flight accessibility of very large enclosed stowage compartments and the subsequent impact on the crewmembers' ability to effectively reach any part of the compartment with the contents of a hand fire extinguisher will require additional fire protection considerations similar to those required for inaccessible compartments such as Class C cargo compartments.

Fire protection features	Stowage compartment interior volumes	
	Less than 25 cubic feet	25 cubic feet to 200 cubic feet
Materials of Construction [1].	Yes	Yes.
Detectors [2]	No	Yes.
Liner [3]	No	Yes.
Locating Device [4].	No	Yes.

[1] *Material*—The material used to construct each enclosed stowage compartment must at least be fire resistant and must meet the flammability standards established for interior components of § 25.853. For compartments less than 25 ft^3 in interior volume, the design must ensure the ability to contain a fire likely to occur within the compartment under normal use.

[2] *Detectors*—Enclosed stowage compartments equal to or exceeding 25 ft^3 in interior volume must be provided with a smoke or fire detection system to ensure that a fire can be detected within a one-minute detection time. Flight tests must be conducted to show compliance with this requirement.

Each system (or systems) must provide:

(a) A visual indication in the flight deck within one minute after the start of a fire,

(b) An aural warning in the overhead crew rest compartment, and

(c) A warning in the main passenger cabin. This warning must be readily detectable by a flight attendant and consider the position of flight attendants throughout the main passenger compartment during various phases of flight.

[3] *Liner*—If it can be shown that the material used to construct the stowage compartment meets the flammability requirements of a liner for a Class B cargo compartment (i.e., § 25.855 at Amendment 25–116, and Appendix F, part I, paragraph (a)(2)(ii)), then no liner is required for enclosed stowage compartments equal to or greater than 25 ft^3 in interior volume but less than 57 ft^3 in interior volume. For all enclosed stowage compartments equal to or greater than 57 ft^3 in interior volume but less than or equal to 200 ft^3, a liner must be provided that meets the requirements of § 25.855 for a Class B cargo compartment.

[4] *Locating Device*—Overhead crew rest compartments which contain enclosed stowage compartments exceeding 25 ft^3 interior volume and which are located away from the entry to the overhead crew rest compartment require additional fire protection features and/or devices to assist the firefighter in determining the location of a fire.

Issued in Renton, Washington, on March 20, 2012.

Ali Bahrami,

Manager, Transport Airplane Directorate, Aircraft Certification Service.

[FR Doc. 2012–7732 Filed 3–29–12; 8:45 am]

BILLING CODE 4910–13–P

SOCIAL SECURITY ADMINISTRATION

20 CFR Parts 404 and 416

[Docket No. SSA 2006–0173]

RIN 0960–AG12

Nonpayment of Benefits to Fugitive Felons and Probation or Parole Violators

AGENCY: Social Security Administration.

ACTION: Proposed rules; withdrawal.

SUMMARY: We are withdrawing the proposed rules we published in the **Federal Register** on December 5, 2005.

DATES: The proposed rules identified in this document are withdrawn as of March 30, 2012.

FOR FURTHER INFORMATION CONTACT: Brian Rudick, Social Insurance Specialist, Office of Regulations, Social Security Administration, 6401 Security Boulevard, Baltimore, MD 21235–6401, (410) 965–7102. For information on eligibility or filing for benefits, call our national toll-free number, 1–800–772–1213 or TTY 1–800–325–0778, or visit our Internet site, Social Security Online, at *http://www.socialsecurity.gov.*

SUPPLEMENTARY INFORMATION:

Background

On December 5, 2005, we published in the **Federal Register** a notice of proposed rulemaking (NPRM) titled ''Nonpayment of Benefits to Fugitive Felons and Probation and Parole Violators'' (70 FR 72411). We have decided not to pursue final rules based

on this NPRM at this time. Therefore, we are withdrawing this NPRM.

Michael J. Astrue,

Commissioner of Social Security.

[FR Doc. 2012–7684 Filed 3–29–12; 8:45 am]

BILLING CODE 4191–02–P

DEPARTMENT OF HOUSING AND URBAN DEVELOPMENT

24 CFR Part 1000

[Docket No. FR–5275–N–12]

Native American Housing Assistance and Self-Determination Reauthorization Act of 2008: Negotiated Rulemaking Committee

AGENCY: Office of the Assistant Secretary for Public and Indian Housing, HUD.

ACTION: Notice of meeting of negotiated rulemaking committee.

SUMMARY: This notice announces a two-day session of the negotiated rulemaking committee that developed HUD's November 18, 2011, proposed rule to revise the regulations governing the Indian Housing Block Grant (IHBG) Program and Title VI Loan Guarantee Program. HUD's proposed rule was developed, as required by statute, by negotiated rulemaking. The public comment period on the proposed rule closed on January 17, 2012. The purpose of the two-day session is to provide the negotiated rulemaking committee members the opportunity to review and consider responses to the public comments received on the November 18, 2011, proposed rule.

DATES: The session will be held on Tuesday, May 1, 2012, and Wednesday, May 2, 2012. On each day, the session will begin at approximately 8:30 a.m., and will adjourn at approximately 6 p.m.

ADDRESSES: The sessions will take place in the Brooke Mondale Auditorium, Department of Housing and Urban Development, 451 Seventh Street SW., Washington DC, 20410. Members of the public wishing to enter the HUD Weaver Building to attend the sessions must present a current photo identification card, such as a valid driver's license, military ID, work related ID, or passport, at the Southeast lobby security reception desk. To expedite entrance into the building, the public is encouraged to RSVP to *Emily.Wright@hud.gov* by April 27, 2012. A visitor pass will be issued and must remain visible at all times. Visitors to the HUD Weaver Building will be required to pass through the magnetometer and have their packages X-rayed or inspected by the security staff.

FOR FURTHER INFORMATION CONTACT: Rodger J. Boyd, Deputy Assistant Secretary for Native American Programs, Office of Public and Indian Housing, Department of Housing and Urban Development, 451 Seventh Street SW., Room 4126, Washington, DC 20410, telephone number 202–401–7914 (this is not a toll-free number). Hearing- or speech-impaired individuals may access this number via TTY by calling the toll-free Federal Relay Service at 1–800–877–8339.

SUPPLEMENTARY INFORMATION: On November 18, 2011 (76 FR 71474), HUD published a proposed rule to revise the regulations governing the IHBG and Title VI Loan Guarantee programs, codified in 24 CFR part 1000. HUD's proposed rule would implement statutory amendments to the Native American Housing Assistance and Self-Determination Act of 1996 (25 U.S.C. 4101 *et seq.*) (NAHASDA) enacted by the Native American Housing Assistance and Self-Determination Reauthorization Act of 2008 (Pub. L. 110–411, approved October 14, 2008). Specifically, HUD's proposed rule would amend subpart A of 24 CFR part 1000 regarding the guiding principles of NAHASDA, definitions, labor standards, environmental review procedures, procurement, tribal and Indian preference, and program income. Proposed changes to subpart B of 24 CFR part 1000 would address eligible families, useful life of properties, and criminal conviction records. Proposed changes to subpart C of 24 CFR part 1000 would address the tribal program year, Indian Housing Plan (IHP) requirements, administrative and planning expenses, reserve accounts, local cooperation agreements, and exemption from taxation. Proposed changes to subpart D of part 24 would address certain formula information that must be included in the IHP and Annual Performance Report (APR), as well as the date by which HUD must provide data used for the formula and projected allocation to a tribe or Tribally Designated Housing Entity. Proposed changes to subpart E of 24 CFR part 1000 would address financing guarantees. Finally, proposed changes to subpart F of 24 CFR part 1000 would address HUD monitoring, APRs, APR review, HUD performance measures, recipient comments on HUD reports, remedial actions in the event of substantial noncompliance, audits, submission of audit reports, and records retention. Additional explanation of HUD's proposed regulatory revisions are provided in the preamble to the November 18, 2011, proposed rule. The public comment period on the proposed rule closed on January 17, 2012.

As required by section 106 of NAHASDA, as amended, HUD negotiated the November 18, 2011, proposed rule with active tribal participation under the procedures of the Negotiated Rulemaking Act of 1990 (5 U.S.C. 561–570). HUD's proposed rule reflects the consensus decisions reached by HUD and the tribal representatives.

This notice announces a two-day session of the negotiated rulemaking committee that developed the November 18, 2011, proposed rule. The purpose of the two-day session is to provide the negotiated rulemaking committee members the opportunity to review and consider responses to the public comments received on the November 18, 2011, proposed rule.

The two-day session will take place as described in the **DATES** and **ADDRESSES** section of this document. The two-day session will be open to the public; however, public attendance may be limited to the space available. Members of the public may be allowed to make statements during the meeting to the extent time permits.

Dated: March 27, 2012.

Rodger J. Boyd,

Deputy Assistant Secretary for Native American Programs.

[FR Doc. 2012–7730 Filed 3–29–12; 8:45 am]

BILLING CODE 4210–67–P

DEPARTMENT OF THE TREASURY

Internal Revenue Service

26 CFR Part 1

[REG–113903–10]

RIN 1545–BJ59

Allocation and Apportionment of Interest Expense; Hearing Cancellation

AGENCY: Internal Revenue Service (IRS), Treasury.

ACTION: Cancellation of notice of public hearing on proposed rulemaking.

SUMMARY: This document cancels a public hearing on proposed rulemaking that provides guidance relating to the allocation and apportionment of interest expense.

DATES: The public hearing, originally scheduled for April 3, 2012 at 10 a.m. is cancelled.

FOR FURTHER INFORMATION CONTACT: Funmi Taylor of the Publications and Regulations Branch, Legal Processing Division, Associate Chief Counsel (Procedure and Administration) at (202) 622–7180 (not a toll-free number).

SUPPLEMENTARY INFORMATION: A notice of proposed rulemaking by cross-reference to temporary regulations and a notice of public hearing that appeared in the **Federal Register** on Tuesday January 17, 2012 (77 FR 2240) announced that a public hearing was scheduled for April 3, 2012, at 10 a.m. in the IRS Auditorium, Internal Revenue Building, 1111 Constitution Avenue NW., Washington, DC. The subject of the public hearing is under section 861 of the Internal Revenue Code.

The public comment period for the proposed rulemaking expired on March 13, 2012. The notice of proposed rulemaking by cross-reference to temporary regulations and a notice of public hearing instructed those interested in testifying at the public hearing to submit an outline of the topics to be addressed. As of Monday, March 26, 2012, no one has requested to speak. Therefore, the public hearing scheduled for April 3, 2012, is cancelled.

LaNita VanDyke,

Chief, Publications and Regulations Branch, Legal Processing Division, Associate Chief Counsel (Procedure and Administration).

[FR Doc. 2012–7609 Filed 3–29–12; 8:45 am]

BILLING CODE 4830–01–P

DEPARTMENT OF TRANSPORTATION

National Highway Traffic Safety Administration

49 CFR Part 571

[Docket No. NHTSA–2012–0036]

RIN 2127–AL05

Federal Motor Vehicle Safety Standards; Seat Belt Assembly Anchorages; Incorporation by Reference

AGENCY: National Highway Traffic Safety Administration (NHTSA), Department of Transportation (DOT).

ACTION: Notice of proposed rulemaking (NPRM).

SUMMARY: This NPRM proposes to amend Federal Motor Vehicle Safety Standard No. 210, ''Seat belt assembly anchorages,'' to specify a new force application device for use as a testing interface to transfer loads onto the seat belt anchorage system during compliance tests of anchorage strength. The device represents a human torso and pelvis. The new device comes in two sizes, one representative of a mid-size adult male, and the other of a small occupant. We propose both sizes be used in FMVSS No. 210. We believe that the devices provide a consistent test configuration and load path to the seat belt assembly anchorages. We are proposing this amendment because the devices are significantly easier to use than the current body blocks.

DATES: Comments must be received on or before May 29, 2012.

ADDRESSES: You may submit comments to the docket number identified in the heading of this document by any of the following methods:

- *Federal eRulemaking Portal:* Go to *http://www.regulations.gov*. Follow the online instructions for submitting comments.
- *Mail:* Docket Management Facility, M–30, U.S. Department of Transportation, West Building, Ground Floor, Rm. W12–140, 1200 New Jersey Avenue SE., Washington, DC 20590.
- *Hand Delivery or Courier:* West Building Ground Floor, Room W12–140, 1200 New Jersey Avenue SE., between 9 a.m. and 5 p.m. Eastern Time, Monday through Friday, except Federal holidays.
- *Fax:* (202) 493–2251.

Regardless of how you submit your comments, you should mention the docket number of this document.

You may call the Docket at 202–366–9324.

Instructions: For detailed instructions on submitting comments and additional information on the rulemaking process, see the Public Participation heading of the **SUPPLEMENTARY INFORMATION** section of this document. Note that all comments received will be posted without change to *http://www.regulations.gov,* including any personal information provided. Please see the Privacy Act discussion below.

Privacy Act: Anyone is able to search the electronic form of all comments received into any of our dockets by the name of the individual submitting the comment (or signing the comment, if submitted on behalf of an association, business, labor union, etc.). You may review DOT's complete Privacy Act Statement in the **Federal Register** published on April 11, 2000 (65 FR 19477–78).

FOR FURTHER INFORMATION CONTACT: *For non-legal issues:* Ms. Carla Rush, Office of Crashworthiness Standards, National Highway Traffic Safety Administration, 1200 New Jersey Avenue SE., Washington, DC 20590 (telephone 202–366–4583, fax 202–493–2739).

For legal issues: Ms. Deirdre Fujita, Office of the Chief Counsel, National Highway Traffic Safety Administration, 1200 New Jersey Avenue SE., Washington, DC 20590 (telephone 202–366–2992, fax: 202–366–3820).

SUPPLEMENTARY INFORMATION:

Table of Contents

I. FMVSS No. 210
II. Proposed New Force Application Device
  a. FAD1 and FAD2
  b. Positioning the FAD
  c. Drawing Package
III. Data From Use of the FADs
  a. Consistent Positioning of the FADs on a Vehicle Seat
  b. Repeatability of Force Measurement
  c. Vehicle Tests
  1. FADs Do Not Appear To Affect the Stringency of the Test
  2. FADs Appear To Offer Advantages
IV. Lead Time
V. Miscellaneous Issues
  a. Metric Units
  b. Note—Testing Motorcoach Seat Belt Anchorages
  c. Note—Figure 3 in FMVSS No. 210
  d. Note—Side-Facing Seats Correction
VI. Rulemaking Analyses and Notices
VII. Public Participation

I. FMVSS No. 210

FMVSS No. 210, ''Seat belt assembly anchorages,'' applies to passenger cars, multipurpose passenger vehicles (MPVs), trucks, and buses. The standard establishes requirements for seat belt assembly anchorages to ensure the anchorages are properly located for effective occupant restraint and to reduce the likelihood of their failure. As to the latter, the standard requires seat belt anchorages to withstand specified forces to increase the likelihood that the belts will remain attached to the vehicle structure in a crash. Under the standard, seat belt anchorage assemblies for lap/shoulder belts must withstand a 13,345 Newton (N) (3,000 pounds (lb)) force applied to the lap belt portion of the seat belt assembly simultaneously with a 13,345 N force applied to the shoulder belt portion of the seat belt assembly. The anchorage assemblies must withstand the force as it is increased over thirty seconds, and withstand that force as it is held for 10 seconds.[1] These forces are applied to the shoulder portion of the belt (for a lap/shoulder belt) by an upper torso body block (Figure 3 in FMVSS No. 210) and the lap belt portion of the belt by a pelvic body block[2] (Figures 2A and 2B in

[1] For lap belt only anchorages, the seat belt anchorage must withstand force as it is increased to 22,241 N (5,000 pounds) over thirty seconds and withstand that force as it is held for 10 seconds.

[2] The particular pelvic body block used depends on the type of seat. Typically the body block in

Continued

FMVSS No. 210 and Figure 2 in FMVSS No. 222, ''School bus passenger seating and crash protection'').

II. Proposed New Force Application Device

We propose to amend FMVSS No. 210 to reference a new ''force application device'' (FAD), which would replace the pelvic body block for all belt types and the upper torso body block for lap/shoulder belts. The FAD consists of an upper torso portion and a pelvic portion hinged together to form a one-piece device, and is available in two sizes (see Figures 5 and 6 in the proposed regulatory text). We propose both sizes be incorporated into the FMVSS No. 210 test procedure.

a. FAD1 and FAD2

The two different size versions of the FADs are called FAD1 and FAD2. We estimate the cost of each FAD (both the FAD1 and FAD2) to be approximately $8,000.

The external dimensions of the FAD1 are based on digital data [3] developed by the University of Michigan Transportation Research Institute (UMTRI) as a representation of the 50th percentile adult male. The FAD1, which weighs 55.8 kg (123 lb), replicates the torso and lap portions of what UMTRI calls the ''Golden Shell'' and reproduces the seat belt angles produced when a seat belt is fastened around a 50th percentile adult male. We believe that the FAD1 and FAD2 provide a consistent test configuration and load path to the seat belt assembly anchorages. A detailed description of the FAD can be found in a technical report prepared for the agency (''Final Report: Development of a Combination Upper Torso and Pelvic Body Block for FMVSS 210 Test, Revision A,'' May 22, 2003, KARCO Engineering, LLC), a copy of which has been placed in the docket for this NPRM.

NHTSA developed the specifications for the FAD2, the smaller version of the force application device, to use at designated seating positions (DSPs) that are too narrow in width to accommodate the FAD1, such as some rear center seats in passenger cars and MPVs. In addition to enabling the testing of the seat belt assembly anchorages of smaller-width DSPs, the FAD2 also would ensure that the test simulates parameters (*e.g.,* belt angle and placement) that are consistent with a smaller person sitting in the seat.

The table below summarizes the dimensions of the FAD1 and the FAD2, and, for comparison purposes, the dimensions of the Hybrid III (HIII) test dummies representing the 50th percentile adult male, 10-year-old child, and the 5th percentile adult female.

	FAD1	HIII 50th Male	FAD2	HIII 10-year-old child	HIII 5th percentile female
Weight (lb/kg)*	123.00/55.79	171.30/77.70	47.50/27.55	77.60/35.20	108/48.99
Shoulder Pivot Height (in/millimeters (mm))	18.50/470	20.2/513	12.38/314	15.55/395	17.5/445
Shoulder Breadth (in/mm)	17.73/450	16.90/429	11.97/304	12.40/315	14.1/358
Hip Breadth (in/mm)	13.97/355	14.3/363	9.43/240	10.40/264	12.1/307

* There is a weight difference in part because the FADs do not have arms, legs, or a head.

As to when the agency would use the FAD1 versus the FAD2 to test the seat belt anchorages, NHTSA proposes the following. The agency would, in the first instance, attempt to fit the FAD1 in the DSP to test the seat belt assembly anchorages, using the procedure described in the next section below. For tests conducted in accordance with S4.2.4 of FMVSS No. 210 (simultaneous testing of adjacent DSP anchorages),[4] if after the FAD1 devices are installed, but prior to conducting the test, there is contact between the FAD1s (or if there is contact between the FAD1s that prevent them from fitting side-by-side), an inboard FAD1 would be replaced with a FAD2. If there is still contact between the FADs, and if there is another inboard DSP, an additional inboard FAD1 would be replaced with a FAD2, and so on. If the contact continues with all inboard DSPs with FAD2s, the FAD1 in the non-driver side outboard DSP would be replaced with a FAD2. If there is still contact between the FADs, the FAD1 in the driver side outboard DSP would be replaced with a FAD2.

Comments are requested on this procedure.

b. Positioning the FAD

The regulatory text of FMVSS No. 210 would specify how the FADs would be positioned on a vehicle seat at the outset of the strength test.[5] Generally, the seat back would be at the manufacturer's design seat back angle, and the seat in its rearmost and lowest position. The FAD would be placed so that its midsagittal plane is vertical and aligned with the longitudinal centerline of the seat back. Prior to the application of forces described in S5 of FMVSS No. 210, the FAD is set up such that the pelvis portion of the FAD rests on the seat and makes contact with the seat back. Holding the pelvis portion in place, the technician positions the torso portion of the FAD in contact with the seat back. The technician would place the lap belt over the lap portion of the pelvis, and if applicable, the shoulder belt across the FAD's torso portion. Once the FAD is in place, the technician would remove enough slack such that the seat belt is snug [6] against the FAD, and would ensure that the seat belt is locked in this position. The technician would then attach the device used to

Figure 2A of FMVSS No. 210 is used. The Figure 2B body block of FMVSS No. 210 is optionally used for center seating positions. The FMVSS No. 222 Figure 2 body block is only used for school buses with a GVWR of 4,536 kilograms (kg) (10,000 pounds) or less.

[3] Robbins, D. 1985. ''Anthropometric Specifications for Mid-Size Male Dummy,'' Volume 2, UMTRI, DOT HS 806 716.

[4] Briefly stated, S4.2.4 specifies that anchorages, attachment hardware, and attachment bolts shall be tested by simultaneously loading them if: (a) The DSPs are common to the same occupant seat and face the same direction, or (b) the DSPs are not common to the same occupant seat, but a DSP has an anchorage that is within 305 mm of an anchorage for one of the adjacent DSPs, provided that the adjacent seats face in the same direction.

[5] In the 1990s, NHTSA did not prevail in an enforcement action brought against a manufacturer for an apparent noncompliance with FMVSS No. 210. In the test, NHTSA positioned the pelvic body block away from the rear seat back, believing that positioning the body block in this manner was within the test parameters of the standard. The manufacturer argued that its vehicle met FMVSS No. 210 when tested with the body block placed against the seat back, and that NHTSA's placement of the pelvic body block forward of the seat back was not required by FMVSS No. 210. Ultimately, the U.S. Court of Appeals for the District of Columbia Circuit determined that NHTSA failed to provide adequate notice about the correct placement of the pelvic body block, i.e., that it could be placed forward of the seat back. *United States* v. *Chrysler Corporation.* 158 F.3rd 1350 (DC Cir. 1998).

[6] ''Snug'' refers to when enough slack is removed from the seat belt(s) such that a 31.75 mm (1¼ inch) diameter wooden rod will not pass between the FAD and the belt with a maximum force of 2.22 N (0.5 lb-force) exerted tangent to the FAD shoulder or lap belt interface.

apply the requisite load(s), and apply the load(s) in the manner described in S5 of the standard. (The May 22, 2003 docketed test report illustrates a typical pull test set-up.)

NHTSA has tentatively concluded that the regulatory text proposed today provides a clear explanation of how the agency will position the FADs in FMVSS No. 210 compliance tests and that following that text will result in consistent positioning of the FADs. NHTSA requests comments on whether and how the proposed text could be improved to provide clearer information on how the FADs would be positioned and how the FMVSS No. 210 test would be conducted.

c. Drawing Package

The FAD1 and the FAD2 each consist of component assemblies specified in approximately 32 drawings that we have docketed. We believe that the drawing package is sufficiently detailed to allow manufacturers to fabricate the FAD1 and FAD2. During development of this NPRM, we compared a FAD1 and FAD2 manufactured by Denton ATD using the drawing package to a FAD1 and a FAD2 that pre-existed the drawing package. NHTSA's Vehicle Research and Test Center dimensionally inspected the FADs manufactured according to the drawings and the preexisting FADs.[7] Based upon this inspection, the agency determined that the devices were sufficiently equivalent. From this evaluation, we tentatively conclude that the drawing package is sufficient to allow consistent fabrication of the FAD1 and FAD2.

III. Data From Use of the FADs

a. Consistent Positioning of the FADs on a Vehicle Seat

Test data indicate that the FADs can be positioned on a vehicle seat in a repeatable manner. In an assessment of the FADs during development of the devices, different test technicians positioned the FAD1 and FAD2 three times in the following nine vehicles: The model year (MY) 2002 Buick LeSabre, MY 2002 Toyota MR–2, MY 1995 Plymouth Neon, MY 1995 Toyota Previa, MY 2000 Chevrolet S–10, MY 2002 Chevrolet TrailBlazer, MY 2003 Volkswagen Jetta, MY 1996 Ford F–350 (U-Haul), and MY 1992 Dodge Ram 350. The technicians were provided a written copy of the seating procedure and no additional instructions. Once each technician had seated a FAD in a test vehicle, a Faro Arm[8] was used to record the precise location of three predetermined points on the FAD relative to a fixed point on the test vehicle.

The results from each technician were compared. On average, the technicians were able to place a FAD in a specific test vehicle so that the predetermined measuring points were within 6.35 mm (¼ inch) of the same point, on the same FAD, in the same test vehicle, placed by the other technicians. (See ''Final Report: Development of a Combination Upper Torso and Pelvic Body Block for FMVSS 210 Test, Revision A,'' *supra.*) We tentatively conclude that a 6.35 mm (¼ inch) variability in seating the FAD is acceptable. In comparison, FMVSS No. 208, ''Occupant crash protection,'' at S10.4.2.1, specifies a 12.7 mm (½ inch) tolerance for the H-point.[9] A 6.35 mm (¼ inch) variability in seating the FAD is well within the same range of tolerance as specified in FMVSS No. 208 for positioning the H-point. This is even more compelling considering the technicians performing the FAD test were unaccustomed to the seating procedure, and that the results were based on the comparison of three points of the FAD surface, not just one.

b. Repeatability of Force Measurement

Test data indicates that in tests with the FADs, comparable forces would be measured, within specified tolerances, from tests of a given seat belt anchorage during repeated trials on the same vehicle body design. Our assessment is based on results of four tests conducted to assess the repeatability of the FAD1 test device. The test configuration was set up in a generic configuration to minimize variability. Anchorage load cells were mounted to a rigid test rig, the vehicle seat was replaced with a rigid seat, and the seat belt webbing was replaced with high strength webbing.

In each test, the FAD1 was positioned, belted, and pulled per the proposed FMVSS No. 210 test procedure. A statistical analysis was performed on both the peak force values as well as time-based metrics. The coefficient of variance (CV) was used to assess the variability of the peak values for each data channel in order to determine the repeatability of the test results and to rate the channels based on an established CV acceptance criteria. The analysis of these tests can be found in a NHTSA Technical Report, ''Repeatability Analysis of the Force Applied to Safety Belt Anchors Using the Force Application Device (May 2009),'' a copy of which is in the docket for this NPRM.

The results indicated that all data channels, except two, were rated ''excellent.'' Of the two, one data channel was rated ''good'' and another was rated ''acceptable.'' To model statistically the output of the entire system over different tests conducted at different points in time, a general linear model (GLM) and a mixed model were used. The GLM produced a time-based p-value of 0.98, which means that there was no statistically significant difference over tests 1 through 4 for the four repeated measures while considering all the data channels. Similarly, there was no statistically significant interaction between the test number and the data channels. This is shown with a p-value of 0.95. These results showed that the repeated force plots of the various channels had similar trends. The mixed model results were similar to the GLM and similarly showed that the four tests were repeatable and consistent over time.

Overall, the test procedure using the FAD1 was demonstrated to be repeatable, with fourteen force channels meeting the ''excellent'' criteria, one channel meeting the ''good'' criteria and one channel meeting the ''acceptable'' criteria. The one ''acceptable'' data channel (retractor Y-axis) had a large measurement error relative to the other channels as seen by the ''acceptable'' coefficient of variation. However, the scale of the mean value, around 889.64 N (200 pounds), is relatively small compared to the 13,345 N (3,000 pound) belt load, thus the greater measurement error has a minor effect on the overall test results. Both the GLM and the mixed model method showed that there are no statistically significant correlations between the test number and the data channel and that the repeated force values of various channels share similar trends.

The agency has no reason to believe that similar results would not be achieved with the FAD2.

c. Vehicle Tests

1. FADs Do Not Appear To Affect the Stringency of the Test

We believe that using the FADs would not affect a vehicle's performance under FMVSS No. 210. That is, use of the FADs would not affect the stringency of the strength test, and would not affect the likelihood of a vehicle's meeting or not meeting the standard's strength requirements.

[7] A document describing the inspection criteria used to make this determination has been placed in the docket for this NPRM.

[8] A Faro Arm is a multiple axis articulated measuring arm with six degrees of freedom.

[9] H-point means the mechanically hinged hip point of a manikin which simulates the actual pivot center of the human torso and thigh.

NHTSA tested nine vehicles with the FAD1, FAD2, and current FMVSS No. 210 body blocks in adjacent seating positions installed in the vehicles shown in Table 2 below. The FAD1 was in the left seat, the FAD2 was in the center seat, and the current upper torso and pelvic body blocks were on the right seat. (Each of the nine indicant Test Reports are in the docket for this NPRM.) Vehicles that met FMVSS No. 210's strength requirements using the current body blocks also met those strength requirements using the FADs.

TABLE 2—NINE INDICANT TESTS

Vehicle year, make, and model	FMVSS No. 210 test results	
	w/Current body blocks	w/FAD1 and FAD2
2005 VW Passat	Pass	Pass.
2005 Acura RL	Pass	Pass.
2005 Toyota Avalon	Pass	Pass.
2005 Buick Lacrosse	Pass	Pass.
2005 Chrysler 300	Pass	Pass.
2005 Chevy Express 11 Passenger Van	Pass	Pass.
2005 Chrysler Town and Country Mini Van with Stow N' Go seating	Pass	Pass.
2005 Ford F–150 Super Crew Cab Pick-up Truck	Pass	Pass.
2005 Chevy Aveo	Pass	Pass.

2. FADs Appear To Offer Advantages

During the vehicle test program, it appeared that there are several advantages to testing with the FADs as compared to testing with the current body blocks, in addition to the factor, discussed above, that the FADs are more representative of a human form than the upper torso and pelvic body blocks.

As noted in the docketed test reports, an advantage to the FAD geometry is that it does not put an unrealistic bending force on the belt buckle, unlike the pelvic body block. Also, the FADs lack the sharp edges of the pelvic body block, which reduces the likelihood of seat belt buckle breakage during testing. (See docketed test reports.) Buckle breakage occurs sometimes with the pelvic body block, which results in replacing the seat belt with steel cable, as allowed by the standard.[10]

We have also noted that, due to the range of motion associated with the current body blocks (which can move independently of each other), there can be excessive spooling out of seat belt webbing during an FMVSS No. 210 test, to the point where the hydraulic rams can reach their full stroke during a test before a requisite force level is reached. When the hydraulic rams reach their full stroke before the test is completed, the test must be stopped so the rams can be re-hooked for the test to continue. The proposed FADs provide a more realistic range of motion because they are shaped like a human, with the upper torso portion hinged to the pelvic portion. The two parts cannot move as independently of each other as can the current FMVSS No. 210 body blocks. The FADs do not result in as much seat belt spool-out as seen with the current body blocks and thereby eliminate the problem of bottoming-out the hydraulic cylinders during the test.

Another noteworthy advantage of the proposed FADs over the current FMVSS No. 210 body blocks is that the FADs necessitate significantly less effort and time to install in a test vehicle. A FAD can be installed in a vehicle seat in less than 5 minutes, while the current body blocks typically necessitate over 10 minutes.[11] This estimated reduction in time results from the ease-of-use of the FADs; they required only one attempt for installation in our tests. In contrast, for the current body blocks, typically numerous attempts at positioning are necessary because the upper torso block often falls out of position during set-up and needs to be re-installed. A test of a common seat with three designated seating positions can be as much as 20 minutes shorter when using the FADs versus when using the current body blocks, which can be associated with decreased labor costs, and ultimately, a decrease in the total cost of the test. Furthermore, the current body blocks need two technicians for installation, while the FADs can be installed by one technician.[12]

For the reasons provided above, we propose to amend FMVSS No. 210 to incorporate the FAD1 and FAD2 into the standard in place of the upper torso and pelvic body blocks.

IV. Lead Time

The proposed effective date (the date that the text of FMVSS No. 210 would be revised in the Code of Federal Regulations) is 180 days after date of publication of the final rule.

The proposed compliance date for testing with the FADs would be three years from the date of publication of the final rule. The agency would use the FADs to test vehicles manufactured on or after the first September 1st that is three years from the date of publication of the final rule. We have tentatively determined that three years is sufficient time for manufacturers to procure the FADs and test their vehicles' seat belt anchorages with the FADs. Optional early compliance would be permitted.

Comment is sought on the proposed lead time.

V. Miscellaneous Issues

a. Metric Units

There are English and metric units used in FMVSS No. 210. At present, force measurements in the introductory sentence of S4.2.1 and in the introductory sentence of S4.2.2 are in pounds (5,000 pounds in S4.2.1 and 3,000 pounds in S4.2.2). The preferred method of measurement in the FMVSSs is the metric system. To reflect the preference for the metric system and to promote consistency throughout FMVSS

[10] S5 of the standard specifies that, when testing the anchorage, the anchorage is connected to material whose breaking strength is equal to or greater than the breaking strength of the webbing for the seat assembly installed as original equipment at that seating position.

[11] See Karco Engineering, LLC ''Final Report: Development of a Combination Upper Torso and Pelvic Body Block for FMVSS 210 Test, Revision A,'' supra, at page 28.

[12] Assuming the use of one technician at a pay rate of $75 per hour and a savings of 5 minutes per seat installation, we estimate that using the FADs to test a vehicle may result in a total labor cost savings of $93.75 (or $18.75 per seating position), as compared to tests of the vehicle using the current body blocks.

No. 210, these measurements specified in pounds are proposed to be specified in Newtons (N). Therefore, for S4.2.1, we propose to specify the force as ''22,241 N (5,000 pounds)'' and for S4.2.2, we propose to specify the force as ''13,345 N (3,000 pounds).''

b. Note—Testing Motorcoach Seat Belt Anchorages

In 2010, NHTSA published an NPRM that, among other matters, proposed to require passenger seat belts on motorcoaches (75 FR 50958; August 18, 2010; Docket NHTSA–2010–0112). Today's NPRM would amend FMVSS No. 210 as applied to all vehicles subject to the standard, including motorcoaches. If the proposal is adopted, the FAD1 and FAD2 would be used instead of the current upper torso and pelvic body blocks to test seat belt anchorages on motorcoaches manufactured on or after the compliance date of the standard.

c. Note—Figure 3 in FMVSS No. 210

For clarification purposes, we would like to point out that, even if we adopt the FADs in a final rule, there would still be a need for the upper torso block shown in Figure 3 of FMVSS No. 210. The upper torso body block depicted in Figure 3 is currently referenced in S5.1.6 of FMVSS No. 222 for use in testing school bus seats to that standard's quasi-static test requirements. The quasi-static test requirements help ensure that seat backs incorporating lap/shoulder belts are strong enough to withstand the forward pull of the torso belts in a crash and the forces imposed on the seat from unbelted passengers to the rear of the belted occupants. NHTSA would continue to use the (Figure 3) torso body block in FMVSS No. 222's quasi-static test. (If the FADs are adopted, the school bus seat belt anchorages would be tested under FMVSS No. 210 with the FADs.)

d. Note—Side-Facing Seats Correction

The regulatory text in this NPRM sets forth S4.2 without the clause ''except for side-facing seats,'' which appears several times in current S4.2. These clauses were made obsolete by an October 8, 2008 final rule [13] which announced our decision to eliminate the exclusion of side-facing seats (and thus apply S4.2's strength requirements to side-facing seats) but which failed to amend S4.2 to reflect this change. A correcting amendment removing the clauses from S4.2 will be issued by the agency. In the meantime, today's document shows S4.2 in corrected form.

VI. Rulemaking Analyses and Notices

A. Executive Order (E.O.) 12866 (Regulatory Planning and Review), E.O. 13563, and DOT Regulatory Policies and Procedures

The agency has considered the impact of this rulemaking action under E.O. 12866, E.O. 13563, and the Department of Transportation's regulatory policies and procedures. This rulemaking was not reviewed by the Office of Management and Budget under E.O. 12866, ''Regulatory Planning and Review.'' The rulemaking action has also been determined to be not significant under the Department's regulatory policies and procedures.

We estimate the cost of each FAD, both the FAD1 and FAD2, to be approximately $8,000 each. Assuming a vehicle manufacturer or testing facility purchases a set of two FAD1s and three FAD2s, the principal cost associated with this NPRM is the one-time [14] purchase cost of the set, totaling $40,000. As discussed above, the FADs require significantly less effort, time and personnel to install in the test vehicle. Thus, we believe there would be associated cost savings which could off-set the purchase cost of the FADs.

The FAD2 is smaller than the FAD1 and would enable NHTSA to test belt anchorages at DSPs that do not fit the latter device. However, additional safety benefits accruing beyond those already attributable to FMVSS No. 210 cannot be quantified.

B. Regulatory Flexibility Act

The Regulatory Flexibility Act of 1980, as amended, requires agencies to evaluate the potential effects of their proposed and final rules on small businesses, small organizations and small governmental jurisdictions. I hereby certify that this proposed rule, if made final, would not have a significant economic impact on a substantial number of small entities. Small organizations and small governmental units would not be significantly affected since the potential cost impacts associated with this action would not significantly affect the price of new motor vehicles.

The Small Business Administration's (SBA's) size standard regulation at 13 CFR part 121, ''Small business size regulations,'' prescribes small business size standards by North American Industry Classification System (NAICS) codes. NAICS code 336111, *Automobile Manufacturing* prescribes a small business size standard of 1,000 or fewer employees. NAICS code 336399, *All Other Motor Vehicle Parts Manufacturing,* prescribes a small business size standard of 750 or fewer employees.

The majority of motor vehicle manufacturers would not qualify as a small business. There are a number of vehicle manufacturers that are small businesses. We anticipate that these small businesses will not directly incur the costs of purchasing the FADs to be used in FMVSS No. 210. However, if these small businesses perform their own FMVSS No. 210 testing or purchase testing services for FMVSS No. 210 compliance, they will benefit from the easier-to-use FADs and the lower labor costs based on the ease of using the FADs, compared to the existing pelvic body blocks. For these reasons, if this proposed rule is made final, NHTSA does not anticipate a significant economic impact on a substantial number of small businesses.

C. Executive Order 13132 (Federalism)

NHTSA has examined today's proposed rule pursuant to Executive Order 13132 (64 FR 43255, August 10, 1999) and concluded that no additional consultation with States, local governments or their representatives is mandated beyond the rulemaking process. The agency has concluded that the rulemaking would not have sufficient federalism implications to warrant consultation with State and local officials or the preparation of a federalism summary impact statement. The proposed rule would not have ''substantial direct effects on the States, on the relationship between the national government and the States, or on the distribution of power and responsibilities among the various levels of government.''

NHTSA rules can preempt in two ways. First, the National Traffic and Motor Vehicle Safety Act contains an express preemption provision: When a motor vehicle safety standard is in effect under this chapter, a State or a political subdivision of a State may prescribe or continue in effect a standard applicable to the same aspect of performance of a motor vehicle or motor vehicle equipment only if the standard is identical to the standard prescribed under this chapter. 49 U.S.C. § 30103(b)(1). It is this statutory command by Congress that preempts

[13] 73 FR 58887, 58888; definition of ''designated seating position.''

[14] Given that the materials that compose the new FADs are polyurethane castings with aluminum structural components and the peripheral attachments are aluminum and steel, we do not expect them to experience any appreciable wear as a result of the FMVSS No. 210 testing and, therefore, we believe that the FADs will have a long service life.

any non-identical State legislative and administrative law addressing the same aspect of performance.

The express preemption provision described above is subject to a savings clause under which ''[c]ompliance with a motor vehicle safety standard prescribed under this chapter does not exempt a person from liability at common law.'' 49 U.S.C. 30103(e) Pursuant to this provision, State common law tort causes of action against motor vehicle manufacturers that might otherwise be preempted by the express preemption provision are generally preserved. However, the Supreme Court has recognized the possibility, in some instances, of implied preemption of such State common law tort causes of action by virtue of NHTSA's rules, even if not expressly preempted. This second way that NHTSA rules can preempt is dependent upon there being an actual conflict between an FMVSS and the higher standard that would effectively be imposed on motor vehicle manufacturers if someone obtained a State common law tort judgment against the manufacturer, notwithstanding the manufacturer's compliance with the NHTSA standard. Because most NHTSA standards established by an FMVSS are minimum standards, a State common law tort cause of action that seeks to impose a higher standard on motor vehicle manufacturers will generally not be preempted. However, if and when such a conflict does exist—for example, when the standard at issue is both a minimum and a maximum standard—the State common law tort cause of action is impliedly preempted. See *Geier* v. *American Honda Motor Co.,* 529 U.S. 861 (2000).

Pursuant to Executive Order 13132 and 12988, NHTSA has considered whether this proposed rule could or should preempt State common law causes of action. The agency's ability to announce its conclusion regarding the preemptive effect of one of its rules reduces the likelihood that preemption will be an issue in any subsequent tort litigation.

To this end, the agency has examined the nature (*e.g.,* the language and structure of the regulatory text) and objectives of today's proposed rule and finds that this proposed rule, like many NHTSA rules, would prescribe only a minimum safety standard. As such, NHTSA does not intend that this proposed rule would preempt state tort law that would effectively impose a higher standard on motor vehicle manufacturers than that established by today's proposed rule. Establishment of a higher standard by means of State tort law would not conflict with the minimum standard proposed here. Without any conflict, there could not be any implied preemption of a State common law tort cause of action.

D. Unfunded Mandates Reform Act

The Unfunded Mandates Reform Act of 1995 (UMRA) requires Federal agencies to prepare a written assessment of the costs, benefits and other effects of proposed or final rules that include a Federal mandate likely to result in the expenditure by State, local or tribal governments, in the aggregate, or by the private sector, of more than $100 million annually (adjusted annually for inflation, with base year of 1995). UMRA also requires an agency issuing a final rule subject to the Act to select the ''least costly, most cost-effective or least burdensome alternative that achieves the objectives of the rule.'' If made final, this proposed rule would not result in a Federal mandate that would likely result in the expenditure by State, local or tribal governments, in the aggregate, or by the private sector, of more than $100 million annually (adjusted annually for inflation, with base year of 1995).

E. National Environmental Policy Act

NHTSA has analyzed this proposed rule for the purposes of the National Environmental Policy Act. The agency has determined that implementation of this action will not have any significant impact on the quality of the human environment.

F. Executive Order 12778 (Civil Justice Reform)

With respect to the review of the promulgation of a new regulation, section 3(b) of Executive Order 12988, ''Civil Justice Reform'' (61 FR 4729, February 7, 1996) requires that Executive agencies make every reasonable effort to ensure that the regulation: (1) Clearly specifies the preemptive effect; (2) clearly specifies the effect on existing Federal law or regulation; (3) provides a clear legal standard for affected conduct, while promoting simplification and burden reduction; (4) clearly specifies the retroactive effect, if any; (5) adequately defines key terms; and (6) addresses other important issues affecting clarity and general draftsmanship under any guidelines issued by the Attorney General. This document is consistent with that requirement.

Pursuant to this Order, NHTSA notes as follows. The preemptive effect of this proposed rule is discussed above. NHTSA notes further that there is no requirement that individuals submit a petition for reconsideration or pursue other administrative proceeding before they may file suit in court.

G. Paperwork Reduction Act (PRA)

Under the PRA of 1995, a person is not required to respond to a collection of information by a Federal agency unless the collection displays a valid OMB control number. In this notice of proposed rulemaking, we are not proposing any ''collections of information'' (as defined at 5 CFR 1320.3(c)).

H. National Technology Transfer and Advancement Act

Under the National Technology Transfer and Advancement Act of 1995 (NTTAA)(Public Law 104–113), all Federal agencies and departments shall use technical standards that are developed or adopted by voluntary consensus standards bodies, using such technical standards as a means to carry out policy objectives or activities determined by the agencies and departments. Voluntary consensus standards are technical standards (e.g., materials specifications, test methods, sampling procedures, and business practices) that are developed or adopted by voluntary consensus standards bodies, such as the International Organization for Standardization (ISO) and the Society of Automotive Engineers (SAE). The NTTAA directs us to provide Congress, through OMB, explanations when we decide not to use available and applicable voluntary consensus standards.

The agency identified an ISO standard (TR 1417–1974) and an SAE standard (J384, Rev. JUN94) that have testing recommendations for seat belt anchorages. Both standards recommend the use of body blocks, similar to those currently specified in FMVSS No. 210, for applying the required test loads. As noted in the preamble, there are advantages to the proposed FADs over the current FMVSS No. 210 body blocks, including that the FADs require significantly less effort and time to install in a test vehicle. Accordingly, we have decided to propose using the FADs in FMVSS No. 210, rather than the body blocks used in the ISO and SAE standards.

Consistent with the Act's goal of eliminating the agency's cost of developing its own standards, NHTSA has based the external dimensions of the FAD1 on the ''Golden Shell'' digital data developed by UMTRI as a representation of the 50th percentile male. By so doing, the agency is saving resources by making use of pertinent

technical information that is already available.

I. Plain Language

Executive Order 12866 requires each agency to write all rules in plain language. Application of the principles of plain language includes consideration of the following questions:

- Have we organized the material to suit the public's needs?
- Are the requirements in the rule clearly stated?
- Does the rule contain technical language or jargon that isn't clear?
- Would a different format (grouping and order of sections, use of headings, paragraphing) make the rule easier to understand?
- Would more (but shorter) sections be better?
- Could we improve clarity by adding tables, lists, or diagrams?
- What else could we do to make the rule easier to understand?

If you have any responses to these questions, please write to us with your views.

VII. Public Participation

How do I prepare and submit comments?

Your comments must be written and in English. To ensure that your comments are correctly filed in the Docket, please include the docket number of this document in your comments.

Your comments must not be more than 15 pages long. (49 CFR 553.21). We established this limit to encourage you to write your primary comments in a concise fashion. However, you may attach necessary additional documents to your comments. There is no limit on the length of the attachments.

Please submit two copies of your comments, including the attachments, to the Docket at the address given above under **ADDRESSES**.

Comments may also be submitted to the docket electronically by logging into *http://www.regulations.gov.* Follow the online instructions for submitting comments.

Please note that pursuant to the Data Quality Act, in order for substantive data to be relied upon and used by the agency, it must meet the information quality standards set forth in the OMB and DOT Data Quality Act guidelines. Accordingly, we encourage you to consult the guidelines in preparing your comments. OMB's guidelines may be accessed at *http://www.whitehouse.gov/omb/fedreg/reproducible.html.*

How can I be sure that my comments were received?

If you wish Docket Management to notify you upon its receipt of your comments, enclose a self-addressed, stamped postcard in the envelope containing your comments. Upon receiving your comments, Docket Management will return the postcard by mail.

How do I submit confidential business information?

If you wish to submit any information under a claim of confidentiality, you should submit three copies of your complete submission, including the information you claim to be confidential business information, to the Chief Counsel, NHTSA, at the address given above under **FOR FURTHER INFORMATION CONTACT**. In addition, you should submit two copies, from which you have deleted the claimed confidential business information, to Docket Management at the address given above under **ADDRESSES**. When you send a comment containing information claimed to be confidential business information, you should include a cover letter setting forth the information specified in our confidential business information regulation. (49 CFR part 512.)

Will the agency consider late comments?

We will consider all comments that Docket Management receives before the close of business on the comment closing date indicated above under **DATES**. To the extent possible, we will also consider comments that Docket Management receives after that date. If Docket Management receives a comment too late for us to consider in developing a final rule (assuming that one is issued), we will consider that comment as an informal suggestion for future rulemaking action.

How can I read the comments submitted by other people?

You may read the comments received by Docket Management at the address given above under **ADDRESSES**. The hours of the Docket are indicated above in the same location. You may also see the comments on the Internet. To read the comments on the Internet, go to *http://www.regulations.gov.* Follow the online instructions for accessing the dockets.

Please note that even after the comment closing date, we will continue to file relevant information in the Docket as it becomes available. Further, some people may submit late comments. Accordingly, we recommend that you periodically check the Docket for new material.

List of Subjects in 49 CFR Part 571

Imports, Motor vehicle safety, Motor vehicles, and Tires.

In consideration of the foregoing, NHTSA proposes to amend 49 CFR part 571 as set forth below.

PART 571—FEDERAL MOTOR VEHICLE SAFETY STANDARDS

1. The authority citation for part 571 of title 49 continues to read as follows:

Authority: 49 U.S.C. 322, 30111, 30115, 30117, and 30166; delegation of authority at 49 CFR 1.50.

2. Section 571.5 by adding paragraph (j)(5) to read as follows:

§ 571.5 Matter incorporated by reference.

* * * * *

(j) * * *

(5) ''Drawing Package for the Force Application Device (FAD) FAD1 and FAD2,'' June 6, 2006, into § 571.210.

* * * * *

3. Section 571.210 is amended by: adding to S3, in alphabetical order, the definitions of ''actuator,'' ''bridged pull yoke,'' ''FAD1,'' ''FAD2,'' ''longitudinal centerline,'' and ''seat centerline''; by revising S4.2.1 and S4.2.2; by adding S5.3, S5.4 and S7, and by adding Figures 5 and 6, to read as follows:

§ 571.210 Standard No. 210, Seat belt assembly anchorages.

* * * * *

S3. *Definitions.*

Actuator means the device used to apply the load in performing testing according to the procedures described in S5 and S7 of this standard.

Bridged pull yoke means the yoke that bridges the torso and pelvis on the FAD1 or FAD2.

FAD1 means a force application device specified in drawings NHTSA–210–12J–A, ''Drawing Package for the Force Application Device (FAD) FAD1 and FAD2,'' June 6, 2006 (incorporated by reference; see § 571.5). (FAD1 is depicted in Figure 5 (figure provided for illustration purposes).)

FAD2 means a force application device that is smaller than FAD1, specified in drawings NHTSA–210–12J–B, ''Drawing Package for the Force Application Device (FAD) FAD1 and FAD2,'' June 6, 2006 (incorporated by reference; see § 571.5). (FAD2 is depicted in Figure 6 (figure provided for illustration purposes).)

Longitudinal centerline of a forward and rear-facing seat refers to the line formed by the intersection of the seating surface and the vertical plane that

passes through the ''seating reference point'' (as defined at 49 CFR 571.3) and is parallel to the longitudinal centerline of the vehicle. For a side-facing seat, longitudinal centerline refers to the intersection of the seating surface and the vertical plane that passes through the seating reference point and is parallel to the transverse centerline of the vehicle.

* * * * *

Seat centerline refers to the line formed by the intersection of the seating surface and the vertical plane that passes through the ''seating reference point'' (as defined at 49 CFR 571.3) and is parallel to the direction that the seat faces.

* * * * *

S4.2 *Strength.*

S4.2.1(a) For vehicles manufactured before [*date inserted would be the first September 1st that is three years from the date of publication of a final rule*], except as provided in S4.2.5, the anchorages, attachment hardware, and attachment bolts for any of the following seat belt assemblies shall withstand a 22,241 N (5,000 pound) force when tested in accordance with S5.1 of this standard:

(1) Type 1 seat belt assembly; and

(2) Lap belt portion of either a Type 2 or automatic seat belt assembly, if such seat belt assembly is equipped with a detachable upper torso belt.

(b) For vehicles manufactured on or after [*date inserted would be the first September 1st that is three years from the date of publication of a final rule*], except as provided in S4.2.5, the anchorages, attachment hardware, and attachment bolts for any of the following seat belts assemblies shall withstand a 22,241 N (5,000 pound) force when tested in accordance with S5.3 of this standard:

(1) Type 1 seat belt assembly; and

(2) Lap belt portion of either a Type 2 or automatic seat belt assembly, if such seat belt assembly is equipped with a detachable upper torso belt.

S4.2.2(a) For vehicles manufactured before [*date inserted would be the first September 1st that is three years from the date of publication of a final rule*], except as provided in S4.2.5, the anchorages, attachment hardware, and attachment bolts for any of the following seat belt assemblies shall withstand a 13,345 N (3,000 pound) force applied to the lap belt portion of the seat belt assembly simultaneously with a 13,345 N (3,000 pound) force applied to the shoulder belt portion of the seat belt assembly, when tested in accordance with S5.2 of this standard:

(1) Type 2 and automatic seat belt assemblies that are installed to comply with Standard No. 208 (49 CFR 571.208); and

(2) Type 2 and automatic seat belt assemblies that are installed at a seating position required to have a Type 1 or Type 2 seat belt assembly by Standard No. 208 (49 CFR 571.208).

(b) For vehicles manufactured on or after [*date inserted would be the first September 1st that is three years from the date of publication of a final rule*], except as provided in S4.2.5, the anchorages, attachment hardware, and attachment bolts for any of the following seat belt assemblies shall withstand a 13,345 N (3,000 pound) force applied to the lap belt portion of the seat belt assembly simultaneously with a 13,345 N (3,000 pound) force applied to the shoulder belt portion of the seat belt assembly, when tested in accordance with S5.4 of this standard:

(1) Type 2 and automatic seat belt assemblies that are installed to comply with Standard No. 208 (49 CFR 571.208); and

(2) Type 2 and automatic seat belt assemblies that are installed at a seating position required to have a Type 1 or Type 2 seat belt assembly by Standard No. 208 (49 CFR 571.208).

* * * * *

S5.3 *Testing seating positions with Type 1 seat belt assemblies.*

(a) Position a FAD1 as specified in S7. When testing in accordance with S4.2.4, if after the FAD1 devices are installed, but prior to conducting the test, there is contact between the FAD1s, or if FAD1s cannot be positioned side-by-side due to contact, replace an inboard FAD1 with a FAD2. If contact remains and another inboard designated seating position exists, replace an additional inboard FAD1 with a FAD2. If contact remains and no other inboard designated seating position exists, replace the non-driver side outboard FAD1 with a FAD2. If there is still contact, replace the driver side outboard FAD1 with a FAD2.

(b) After positioning the FAD1 or FAD2, as appropriate, in accordance with S7, apply a force of 22,241 N to the bridged pull yoke on the FAD1 or to the bridged pull yoke on the FAD2, in the direction in which the seat faces, in a vertical plane that passes through the ''seating reference point'' (as defined in 49 CFR 571.3) and that is parallel to the longitudinal centerline of the vehicle for forward- and rear-facing seats, or that is perpendicular to the longitudinal centerline of the vehicle for side-facing seats, with an initial force application angle of 10 +/− 5 degrees above the horizontal plane and +/− 5 degrees from the vertical plane. Apply the force at the onset rate of not more than 222,411 N per second. Attain the 22,241 N force within 30 seconds and maintain it for 10 seconds.

S5.4 *Testing seats with Type 2 or Type 2A seat belt assemblies.*

(a) Position a FAD1 as specified in S7. When testing in accordance with S4.2.4, if after the FAD1 devices are installed, but prior to conducting the test, there is contact between the FAD1s, or if FAD1s cannot be positioned side-by-side due to contact, replace an inboard FAD1 with a FAD2. If contact remains and another inboard designated seating position exists, replace an additional inboard FAD1 with a FAD2. If contact remains and no other inboard designated seating position exists, replace the non-driver side outboard FAD1 with a FAD2. If there is still contact, replace the driver side outboard FAD1 with a FAD2.

(b) After positioning the FAD1 or FAD2, as appropriate, in accordance with S7, apply forces of 13,345 N simultaneously to the yoke attached to the torso of the FAD1 or FAD2 and to the eyelet attached to the pelvis of the FAD1 or FAD2, in the direction in which the seat faces, in a vertical plane that passes through the ''seating reference point'' (as defined in 49 CFR 571.3), and that is parallel to the longitudinal centerline of the vehicle for forward- and rear-facing seats, or that is perpendicular to the longitudinal centerline of the vehicle for side-facing seats, with an initial force application angle of 10+/− 5 degrees above the horizontal plane and +/− 5 degrees from the vertical plane. Apply the forces at the onset rate of not more than 133,447 N per second. Attain the 13,345 N force within 30 seconds of the initial application of force and maintain it for 10 seconds.

* * * * *

S7. *Force Application Device (FAD)1 and FAD2 Positioning Procedure.*

(a) If adjustable, place the seat in its rearmost position and, if separately adjustable in the vertical direction, at its lowest position.

(b) If adjustable, place the seat back at the manufacturer's design seat back angle, as measured by SAE J826 (July 1995) (incorporated by reference, see § 571.5).

(c) Identify and mark the longitudinal centerline for each designated seating position.

(d) Place the FAD1 or FAD2, as appropriate, on the seat such that the midsagittal plane of the FAD1 or FAD2 is vertical and within ± 10 mm of the seat centerline, with the torso in contact with the seat back.

(e) While maintaining the alignment with the longitudinal centerline as

described in S7.(d), move the pelvis portion of the FAD1 or FAD2 toward the seat back until it contacts the seat back.

(f) If the torso is not in contact with the seat back, rotate it against the seat back while holding the pelvis in place until the back of the torso is in contact with the seat back.

(g) Apply a horizontal force of 180 ± 5 N to the yoke attached to the torso of the FAD1 or FAD2 towards the seat back. While performing this step, ensure that the pelvis portion of the FAD1 or FAD2 remains in contact with the seat and seat back.

(h) Buckle and position the seat belt so that the lap belt secures the pelvis portion of the FAD1 or FAD2 and the shoulder strap secures the torso portion of the FAD1 or FAD2.

(i) Remove enough slack such that a 31.75 mm (1¼ inch) diameter wooden rod will not pass between the FAD1 or FAD2 and the lap and shoulder belt with a maximum force of 2.22 N (0.5 lb-force) exerted tangent to the FAD1 or FAD2 shoulder or lap belt interface and ensure that the seat belt is locked in this position.

(j) If testing a Type 2 or Type 2A seat belt assembly, attach one actuator to the yoke attached to the torso of the FAD1 and one to the eyelet attached to the pelvis of the FAD1, or to the torso of the FAD2 and one to the eyelet attached to the pelvis of the FAD2. If testing a Type 1 seat belt assembly, attach the actuator to the bridged pull yoke of the FAD 1 or to the bridged pull yoke of the FAD2.

* * * * *

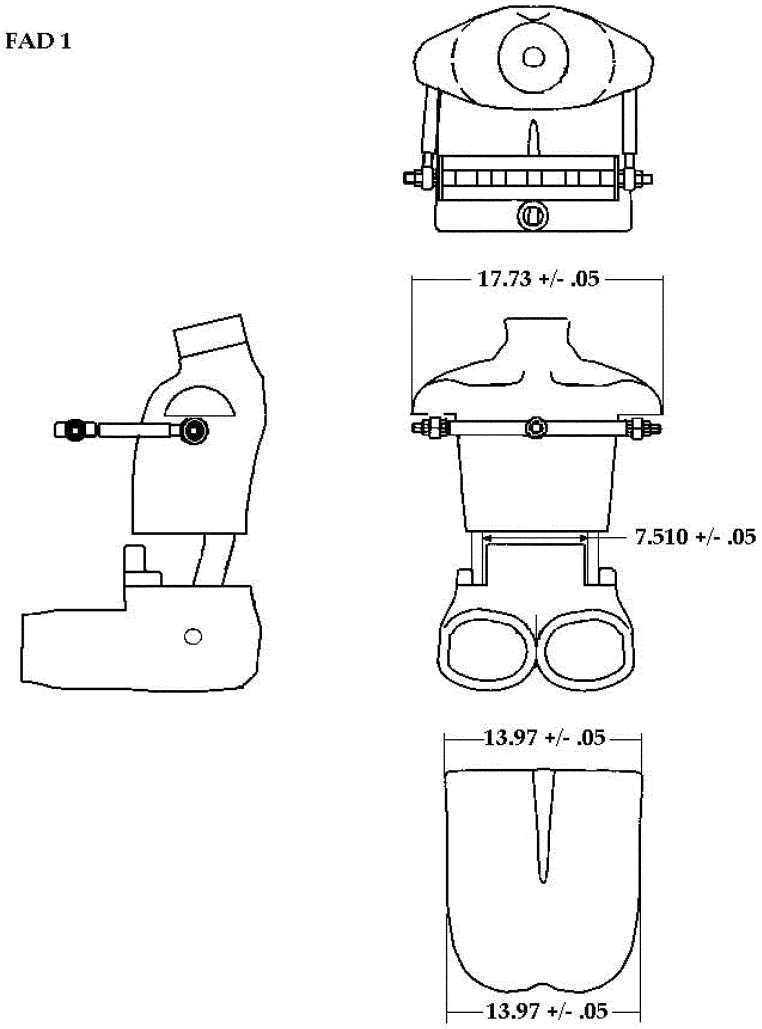

Figure 5 – FAD1 (provided for illustration purposes)

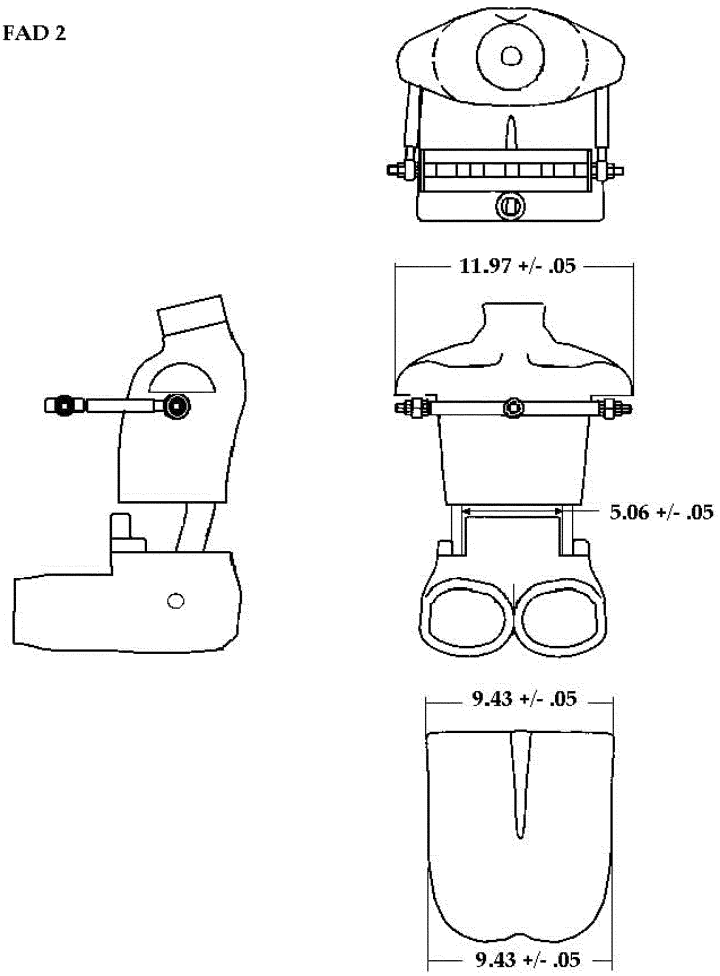

Figure 6 – FAD2 (provided for illustration purposes)

Dated: Issued on: March 23, 2012.

Christopher J. Bonanti,

Associate Administrator for Rulemaking.

[FR Doc. 2012–7623 Filed 3–27–12; 8:45 am]

BILLING CODE 4910–59–P

DEPARTMENT OF COMMERCE

National Oceanic and Atmospheric Administration

50 CFR Parts 600 and 635

RIN 0648–XB121

Atlantic Highly Migratory Species; 2006 Consolidated Highly Migratory Species Fishery Management Plan; Amendment 4

AGENCY: National Marine Fisheries Service (NMFS), National Oceanic and Atmospheric Administration (NOAA), Commerce.

ACTION: Notice of public hearings.

SUMMARY: On March 16, 2012, NMFS published a proposed rule for a fishery management plan (FMP) amendment modifying the regulations governing the Federal small-scale HMS fisheries in the U.S. Caribbean, and announced that public hearings would be scheduled in a future notice. In this notice, NMFS is announcing public hearings in St. Croix, United States Virgin Islands (USVI) St. Thomas, USVI, San Juan, Puerto Rico (PR), Ponce, PR, and Mayaguez, PR, in order to provide greater opportunity for public comment on the proposed rule. Public comments on the proposed rule must be received on or before June 14, 2012.

DATES: Public hearings for Amendment 4 to the 2006 Consolidated Highly Migratory Species (HMS) Fishery Management Plan (FMP) will be held from April through May 2012. See **SUPPLEMENTARY INFORMATION** for meeting dates, times, and locations.

ADDRESSES: As published on March 16, 2012 (77 FR 15701), written comments on this action may be submitted, identified by NOAA–NMFS–2012–0053, by any one of the following methods:

- *Electronic submissions:* Submit all electronic public comments via the Federal e-Rulemaking Portal: *http://www.regulations.gov.* To submit comments via the e-Rulemaking Portal, first click the ''submit a comment'' icon, then enter NOAA–NMFS–2012–0053 in the keyword search. Locate the document you wish to comment on from the resulting list and click on the ''Submit a Comment'' icon on the right of that line.
- *Mail:* Submit written comments to Margo Schulze-Haugen, 1315 East-West Highway, Silver Spring, MD 20910.
- *Fax:* 301–713–1917; Attn: Margo Schulze-Haugen.

Instructions: All comments received are part of the public record and generally will be posted to portal *http://www.regulations.gov* without

change. All personal identifying information (for example, name, address, etc.) voluntarily submitted by the commenter may be publicly accessible. Do not submit confidential business information or otherwise sensitive or protected information. NMFS will accept anonymous comments (enter ''N/A'' in the required fields if you wish to remain anonymous). Attachments to electronic comments will be accepted in Microsoft Word or Excel, WordPerfect, or Adobe PDF file formats only.

Supporting documents, including the 2012 Environmental Assessment, Regulatory Impact Review, and Final Regulatory Flexibility Analysis, as well as others, such as the Highly Migratory Species Fishery Management Plans may be downloaded from the HMS Web site at *www.nmfs.noaa.gov/sfa/hms/*. These documents also are available by calling Greg Fairclough or Randy Blankinship at 727–824–5399.

FOR FURTHER INFORMATION CONTACT: Greg Fairclough or Randy Blankinship at 727–824–5399.

SUPPLEMENTARY INFORMATION: Atlantic tunas and swordfish are managed under the dual authority of the Magnuson-Stevens Fishery Conservation and Management Act (Magnuson-Stevens Act) and the Atlantic Tuna Conventions Act (ATCA), which authorizes the Secretary of Commerce (Secretary) to promulgate regulations as may be necessary and appropriate to implement recommendations of ICCAT. Federal Atlantic shark fisheries are managed under the authority of the Magnuson-Stevens Act. The authority to issue regulations under the Magnuson-Stevens Act and ATCA has been delegated from the Secretary to the Assistant Administrator for Fisheries, NOAA (AA). On May 28, 1999, NMFS published in the **Federal Register** (64 FR 29090) final regulations, effective July 1, 1999, implementing the Fishery Management Plan for Atlantic Tunas, Swordfish, and Sharks (1999 FMP). On October 2, 2006, NMFS published in the **Federal Register** (71 FR 58058) final regulations, effective November 1, 2006, implementing the 2006 Consolidated HMS FMP, which details the management measures for Atlantic HMS fisheries, including the HMS handgear fishery.

In a proposed rule published on March 16, 2012 (77 FR 15701), NMFS indicated that dates and locations for public hearings on the proposed action would be published in the **Federal Register** at a later date. In this notice, NMFS announces that it will hold six public hearings (see Table 1 for meeting dates, times, and locations). These hearings, in addition to written comment collected via the methods described above, will allow NMFS to collect public comments on the proposed rule, which will assist NMFS in determining the final action for Amendment 4 to the 2006 Consolidated HMS FMP, consistent with the Magnuson-Stevens Act, ATCA, and other applicable laws.

TABLE 1—DATES, TIMES, AND LOCATIONS OF SIX PUBLIC HEARINGS

Date	Time	Meeting locations	Address
April 10, 2012	6–9 p.m	Buccaneer Hotel	5007 Estate Shoys, Christiansted, VI 00820.
April 11, 2012	8 a.m	Buccaneer Hotel	5007 Estate Shoys, Christiansted, VI 00820.
April 12, 2012	6–9 p.m	Frenchman's Reef Marriot	Frenchman's Reef Marriott 5 Estate Bakkeroe, St. Thomas, USVI 00801.
May 8, 2012	3–5 p.m	Ateneo Puertorriqueno	Biblioteca del Ateneo Puertorriqueno, Avenida Constitucion, Parada 2, Viejo San Juan, San Juan PR 00901.
May 9, 2012	2–5 p.m	Servicio de Extension Agricola.	2440 Avenida Las Americas, Ste. 208, Centro Gubernamental, Ponce, PR 00717–2111.
May 10, 2012	6–9 p.m	Universidad de Puerto Rico.	University of Puerto Rico, Mayaguez Campus, Physics Building, Room 310, Mayaguez, PR 00680.

Authority: 16 U.S.C. 1801 *et seq.*

Dated: March 27, 2012.

Emily H. Menashes,

Acting Director, Office of Sustainable Fisheries, National Marine Fisheries Service.

[FR Doc. 2012–7713 Filed 3–27–12; 4:15 pm]

BILLING CODE 3510–22–P

DEPARTMENT OF COMMERCE

National Oceanic and Atmospheric Administration

50 CFR Part 622

[Docket No. 100812344–2165–01]

RIN 0648–AY74

Fisheries of the Caribbean, Gulf of Mexico, and South Atlantic; Snapper-Grouper Fishery Off the Southern Atlantic States; Amendment 20A

AGENCY: National Marine Fisheries Service (NMFS), National Oceanic and Atmospheric Administration (NOAA), Commerce.

ACTION: Proposed rule; request for comments.

SUMMARY: NMFS proposes regulations to implement Amendment 20A (Amendment 20A) to the Fishery Management Plan for the Snapper-Grouper Fishery of the South Atlantic Region (FMP) as prepared and submitted by the South Atlantic Fishery Management Council (Council). If implemented, this rule would revise the wreckfish individual transferable quota (ITQ) program, by defining and reverting inactive wreckfish quota shares, redistributing reverted quota shares to remaining shareholders, establishing a cap on the number of wreckfish quota shares a single entity may own, and establishing an appeals process for redistribution of reverted wreckfish quota shares. The intent of this rule is to help achieve the optimum yield (OY) from the wreckfish commercial sector in accordance with the Magnuson-Stevens Fishery Conservation and Management Act (Magnuson-Stevens Act).

DATES: Written comments must be received on or before April 30, 2012.

ADDRESSES: You may submit comments on the amendment identified by ''NOAA–NMFS–2011–0277'' by any of the following methods:

- *Electronic submissions:* Submit electronic comments via the Federal e-Rulemaking Portal: *http://www.regulations.gov*. Follow the instructions for submitting comments.
- *Mail:* Nikhil Mehta, Southeast Regional Office, NMFS, 263 13th Avenue South, St. Petersburg, FL 33701.

Instructions: All comments received are a part of the public record and will generally be posted to *http://www.regulations.gov* without change. All Personal Identifying Information (for example, name, address, etc.)

voluntarily submitted by the commenter may be publicly accessible. Do not submit Confidential Business Information or otherwise sensitive or protected information.

To submit comments through the Federal e-Rulemaking Portal: *http://www.regulations.gov,* click on ''submit a comment'', then enter ''NOAA–NMFS–2011–0277'' in the keyword search and click on ''search''. To view posted comments during the comment period, enter ''NOAA–NMFS–2011–0277'' in the keyword search and click on ''search''. NMFS will accept anonymous comments (enter N/A in the required field if you wish to remain anonymous). You may submit attachments to electronic comments in Microsoft Word, Excel, WordPerfect, or Adobe PDF file formats only.

Comments received through means not specified in this rule will not be considered.

Electronic copies of Amendment 20A may be obtained from the Southeast Regional Office Web Site at *http://sero.nmfs.noaa.gov/sf/SASnapperGrouperHomepage.htm*.

Comments regarding the burden-hour estimates or other aspects of the collection-of-information requirements contained in this proposed rule may be submitted in writing to Anik Clemens, Southeast Regional Office, NMFS, 263 13th Avenue South, St. Petersburg, FL 33701; and OMB, by email at *OIRA Submission@omb.eop.gov,* or by fax to 202–395–7285.

FOR FURTHER INFORMATION CONTACT: Nikhil Mehta, telephone: 727–824–5305, or email: *nikhil.mehta@noaa.gov*.

SUPPLEMENTARY INFORMATION: Wreckfish is part of the snapper-grouper fishery and is managed under the FMP. The FMP was prepared by the Council and is implemented through regulations at 50 CFR part 622 under the authority of the Magnuson-Stevens Act.

Background

The wreckfish commercial sector has been managed under an ITQ program since March 1992, through Amendment 5 to the FMP, in order to end derby fishing (race to fish) practices. Currently, latent effort exists in the wreckfish commercial sector with very few active participants. In August 2010, the Council's Scientific and Statistical Committee (SSC) recommended an acceptable biological catch (ABC) for wreckfish off the southern Atlantic states of 250,000 lb (113,389 kg), round weight. The proposed rule for the South Atlantic Comprehensive Annual Catch Limit Amendment (Comprehensive ACL Amendment), which published on December 1, 2011 (76 FR 74757), proposed an ACL of 250,000 lb (113,389 kg), round weight for wreckfish. However, in November 2011, the Council's SSC recommended a revised wreckfish ABC equal to 235,000 lb (106,594 kg), round weight, and the Council approved revising the ACL to reflect the lower ABC at its December meeting. Thus, NMFS published an amended proposed rule for the Comprehensive ACL Amendment on December 30, 2011 (76 FR 82264), to propose the ACL of 235,000 lb (106,594 kg), round weight. The Comprehensive ACL Amendment was approved on January 18, 2012, and the final rule for the Comprehensive ACL Amendment will allocate 95 percent of the wreckfish ACL to the commercial sector, which represents a commercial ACL of 223,250 lb (101,264 kg), round weight. The commercial ACL would be an 89-percent reduction from the current total allowable catch for wreckfish of 2 million lb (907,185 kg), round weight. The purpose of Amendment 20A is to identify and revert inactive wreckfish shares for redistribution among remaining shareholders and establish a share cap and an appeals process. The intent of this amendment is to achieve OY in the wreckfish commercial sector while maximizing harvest potential and not exceeding the ACL.

Management Measures Contained in This Proposed Rule

Define and Revert Inactive Wreckfish Quota Shares

The ACL for the wreckfish commercial sector in the Comprehensive ACL Amendment and in the amended proposed rule, will result in a significant reduction in the amount of available harvest associated with each wreckfish quota share, including inactive wreckfish quota shares, in order to maintain harvest at or below the ACL. If inactive wreckfish quota shares are not reverted and redistributed to active wreckfish quota shareholders, harvest would likely only be approximately 130,735–160,338 lb (59,300–72,728 kg), round weight, after applying the new ACL. As of November 17, 2011, there were 20 shareholders in the wreckfish commercial sector of the snapper-grouper fishery. Out of those 20 wreckfish shareholders, 13 inactive wreckfish quota shareholders held a combined 28.18 percent of wreckfish quota shares. Amendment 20A defines inactive shares as those shares held by ITQ shareholders who did not report any wreckfish landings between April 16, 2006, and January 14, 2011. This rule, if implemented, would revert these inactive wreckfish quota shares and redistribute them among the seven remaining active wreckfish quota shareholders.

Redistribute Reverted Wreckfish Quota Shares

This rule, if implemented, would redistribute the above mentioned wreckfish quota shares to remaining wreckfish quota shareholders based on landings history from fishing years 2006/2007 through 2010/2011. The percentage of individual wreckfish quota shares redistributed to the remaining wreckfish quota shareholders would range from 0.04 percent to 9.91 percent, depending on the remaining wreckfish quota shareholder's landings history.

Establish a Share Cap

This rule, if implemented, would establish a share ownership cap of 49 percent of the total wreckfish quota shares. This would prevent any one entity from holding the majority of wreckfish quota shares. NMFS would determine a corporation's total ITQ share, which would not exceed the 49 percent share cap, by adding the corporation's ITQ shares to any other ITQ shares the corporation owns in another corporation. If an individual ITQ shareholder is also a shareholder in a corporation that holds ITQ shares, the applicable ITQ shares held by the individual is added to the applicable ITQ shares equivalent to the corporate share the individual holds in a corporation. A corporation must provide the Regional Administrator (RA) the identity of the shareholders of the corporation and their percent of shares in the corporation, and provide updated information to the RA within 30 days of when changes occur. This information must also be provided to the RA any time a commercial vessel permit for wreckfish is renewed or transferred.

Establish an Appeals Process

Five percent of the wreckfish quota shares for the 2012/2013 fishing year would be set-aside if Amendment 20A is approved, to resolve any appeals, for a period of 90 days starting on the effective date of the final rule. The RA would review, evaluate, and provide final decisions on appeals. Hardship arguments would not be considered. The only items subject to appeal are the status of wreckfish quota shares, as active or inactive and the accuracy of the amount of landings. The RA would determine the outcome of appeals based on NMFS' logbooks. If NMFS' logbooks are not available, the RA could use state landings records. Appellants would

submit NMFS logbooks, or state landings records if appropriate, to support their appeal. Any portion of the 5-percent share remaining after the appeals process is completed will be distributed as soon as possible among the remaining shareholders, based on each shareholder's wreckfish landings reported between April 16, 2006, and January 14, 2011.

Availability of Amendment 20A

Additional background and rationale for the measures previously discussed are contained in Amendment 20A. The availability of Amendment 20A was announced in the **Federal Register** on January 12, 2012 (77 FR 1908). Written comments on Amendment 20A must be received by March 12, 2012. All comments received on the amendment or the proposed rule during their respective comment periods will be addressed in the preamble to the final rule, if the Amendment is approved.

Classification

Pursuant to section 304(b)(1)(A) of the Magnuson-Stevens Act, the NMFS Assistant Administrator has determined that this proposed rule is consistent with Amendment 20A, other provisions of the Magnuson-Stevens Act, and other applicable law, subject to further consideration after public comment.

This proposed rule has been determined to be not significant for purposes of Executive Order 12866.

The Chief Counsel for Regulation of the Department of Commerce certified to the Chief Counsel for Advocacy of the Small Business Administration that this rule, if adopted, would not have a significant economic impact on a substantial number of small entities. The factual basis for this determination is as follows.

This rule, if implemented, would define and revert inactive shares of wreckfish quota, redistribute any reverted shares to active shareholders, establish a share cap, and establish an appeals process. The objectives of this rule are to achieve OY in the commercial wreckfish sector of the South Atlantic snapper-grouper fishery in accordance with National Standard 1 of the Magnuson-Stevens Act, which will in turn result in a more efficient use of the species in accordance with National Standard 5 of the Magnuson-Stevens Act. Establishment of a share cap is necessary to comply with requirements for limited access privilege programs under Section 303A of the Magnuson-Stevens Act. The management measures contained in this rule are described in the preamble and are not repeated here.

This rule is expected to directly affect shareholders that possess quota shares in the wreckfish commercial sector of the snapper-grouper fishery. The Small Business Administration has established size criteria for all major industry sectors in the U.S. including fish harvesters. A business involved in fish harvesting is classified as a small business if it is independently owned and operated, is not dominant in its field of operation (including its affiliates), and has combined annual receipts not in excess of $4.0 million (NAICS code 114111, finfish fishing) for all its affiliated operations worldwide.

As of November 17, 2011, 20 entities held shares in the wreckfish commercial sector of the snapper-grouper fishery. The minimum quota share held by a shareholder was 0.06 percent. The maximum quota share was 20.63 percent. The average quota share was approximately 5 percent. With respect to the distribution of shares, as of November 17, 2011, 13 shareholders owned less than 5 percent, 4 shareholders owned between 5 percent and 10 percent, 2 shareholders owned between 10 percent and 15 percent, and 1 shareholder owned more than 20 percent of the quota shares. Given that the current market value of a 1 percent share is $6,407, the minimum market value of a shareholder's quota shares is $384, the maximum market value of a shareholder's quota shares is approximately $132,176, while the average market value of a shareholder's quota shares is approximately $32,035.

Based on landings data from the 5 most recent fishing years (i.e., 2006/2007 to 2010/2011), 13 of the 20 shareholders had no wreckfish commercial landings during this time. Further, 11 of the 13 inactive shareholders were not commercially active in any fisheries, and thus earned no gross revenue or profit from commercial fishing activities, between 2006 and 2010. The other two inactive shareholders commercially harvested species other than wreckfish during this time. The extent to which these two shareholders were involved in other commercial harvesting activities differs greatly, as one was only minimally involved and the other significantly involved in such activities. Specific information regarding their landings and gross revenue is confidential, while information regarding their profits is currently not available.

Seven of the 20 shareholders had at least 1 lb (0.45 kg) of wreckfish commercial landings during the 5 most recent fishing years. More specifically, these shareholders' annual wreckfish landings and gross revenue were 32,804 lb (14,880 kg) and $82,085 on average during this time, respectively. On average, these shareholders also earned $90,582 in annual gross revenue from other species during this time. Thus, annual gross revenue from commercial fishing was $172,668 per shareholder on average during the 5 most recent fishing years. Information regarding these shareholders' profits is not currently available. The maximum gross revenue earned by a single shareholder in any of the 5 most recent fishing years was $484,372. Based on these figures, all 20 shareholders that are expected to be directly affected by this rule are treated as small business entities for the purpose of this analysis.

The rule would define 28.18 percent of the quota shares as inactive and would revert them for redistribution to shareholders determined to be active. By definition, the 13 inactive shareholders possessing these quota shares would not incur any losses in wreckfish landings or gross revenue. Eleven of these inactive shareholders had no commercial landings of any species between 2006 and 2010 and, thus, have no gross revenue or profits from commercial fishing. As such, this action would not reduce their profits from commercial fishing. The other two inactive shareholders did have commercial landings and gross revenue of other species during 2006 and 2010. Because all of their landings, gross revenue, and thus profit come from the commercial harvest of species other than wreckfish, NMFS does not expect the loss of wreckfish shares to affect the current operations of these two shareholders' vessels. However, they would no longer have the option of fishing for wreckfish in the future. The loss of shares would also prevent the inactive shareholders from leasing their annual allocation of wreckfish coupons. However, as no coupons have been leased by any shareholder since 1995, no loss in profits is expected. NMFS estimates the value of the loss of quota share to these 13 inactive shareholders to be approximately $180,600, or about $13,890 per shareholder. However, these losses represent a loss in asset value or wealth rather than a loss in profits.

If implemented, this rule would redistribute reverted shares to the 7 active shareholders in the wreckfish segment of the snapper-grouper fishery, who would see an increase in shares by 0.04 percent, 0.06 percent, 1.43 percent, 2.37 percent, 5.07 percent, 9.3 percent, and 9.9 percent, respectively. After the redistribution, the final distribution of total wreckfish shares across the 7 active shareholders would be 3.55 percent,

9.05 percent, 11.24 percent, 11.62 percent, 18.38 percent, 23 percent, and 23.16 percent, respectively. Because the proposed action would distribute reverted shares proportionate to current share holdings, the distribution of reverted shares will be unequal. All active shareholders would, nevertheless receive redistributed shares and associated economic benefits. With respect to short-term economic benefits, the increase in annual allocation for each active shareholder ranges from 86 lb (39 kg) to 22,114 lb (10,052 kg), or approximately 8,986 lb (4,085 kg) on average. In turn, the expected increase in annual gross revenue from wreckfish landings ranges from $257 to $65,457 per shareholder, or approximately $26,603 on average. This increase in shareholders' gross revenue from wreckfish landings represents an increase of approximately 15.4 percent in gross revenue from all of their commercial fishing activities on average. Thus, NMFS expects this action to increase the profits of the seven active shareholders relative to the profits they would earn if the reverted shares were not redistributed. With respect to long-term economic benefits, the expected increase in the total value of shareholders' shares is approximately $180,600. On a per shareholder basis, the increase in the value of each shareholder's shares ranges from $249 to $63,465, or approximately $13,890 on average. These gains represent an increase in asset value or wealth rather than an increase in profits.

No person, including a corporation or other entity, may individually or collectively hold ITQ shares in excess of 49 percent of the total shares. If implemented, this share cap would prevent any one person, including a corporation or other entity, from holding the majority of wreckfish quota shares, and would not result in any of the 7 active shareholders exceeding the quota share cap. The maximum quota share held by a person, including a corporation or other entity, as a result of the actions to define and revert inactive shares and redistribute those shares to remaining shareholders is 41.54 percent. Thus, no person, including a corporation or other entity, would exceed the 49 percent share cap and, in turn, no person, including a corporation or other entity, would possess excess shares that would be subject to further redistribution. As a result, no direct, adverse economic effects are expected and profits would not be reduced.

Because the RA would have sole authority with respect to reviewing, evaluating, and rendering final decisions on appeals, the cost to a shareholder for filing an appeal is expected to be minimal. Further, the set aside of 11,163 lb (5,074 kg) to resolve appeals is likely small enough relative to the total shares distributed to avoid creating any significant adverse economic effects on active shareholders.

As discussed above, this rule, if implemented, is not expected to have a significant direct adverse economic effect on the profits of the small entities impacted by this rule. For this reason, the Chief Counsel for Regulation certified that this rule would not have a significant economic impact on a substantial number of small entities. Thus, an initial regulatory flexibility analysis is not required and none has been prepared.

No duplicative, overlapping, or conflicting Federal rules have been identified.

Notwithstanding any other provision of law, no person is required to respond to, nor shall a person be subject to a penalty for failure to comply with, a collection-of-information subject to the requirements of the Paperwork Reduction Act (PRA), unless that collection-of-information displays a currently valid Office of Management and Budget (OMB) control number.

This proposed rule contains a collection-of-information requirement that has been approved under OMB control number 0648–0205, on May 24, 2011. Participants in the South Atlantic wreckfish ITQ program are required to identify the shareholders of the corporation and their percent of shares in the corporation in the Federal Wreckfish Permit Application Form, to allow NMFS to determine the share cap for the wreckfish ITQ program. NMFS requires this information upon renewal or transfer of a commercial vessel permit for wreckfish and within 30 days of when such changes occur.

Additionally, this proposed rule contains a new collection of information requirement that is subject to the PRA. Under this proposed rule, NMFS would implement a process to allow participants in the South Atlantic wreckfish ITQ program to submit an appeal of ITQ landings information. Under this proposed rule, those participants would be required to submit documentation, including NMFS' logbooks or state landings records to support their appeal.

An application for this information collection requirement has been submitted to OMB for approval. The public reporting burden for this collection-of-information is estimated to average 2 hours per appellant. This estimate of the public reporting burden includes the time for reviewing instructions, gathering and maintaining the data needed, and completing and reviewing the collection-of-information. NMFS seeks public comment regarding whether this proposed collection-of-information is necessary for the proper performance of the functions of the agency, including whether the information will have practical utility; the accuracy of the burden estimate; ways to enhance the quality, utility, and clarity of the information to be collected; and ways to minimize the burden of the collection-of-information, including the use of automated collection techniques or other forms of information technology. Send comments regarding the burden estimate or any other aspect of the collection-of-information requirement, including suggestions for reducing the burden, to NMFS and to OMB (see **ADDRESSES**).

List of Subjects in 50 CFR Part 622

Fisheries, Fishing, Puerto Rico, Reporting and recordkeeping requirements, Virgin Islands.

Dated: March 26, 2012.

Alan D. Risenhoover,

Acting Deputy Assistant Administrator for Regulatory Programs, National Marine Fisheries Service.

For the reasons set out in the preamble, 50 CFR part 622 is proposed to be amended as follows:

PART 622—FISHERIES OF THE CARIBBEAN, GULF, AND SOUTH ATLANTIC

1. The authority citation for part 622 continues to read as follows:

Authority: 16 U.S.C. 1801 *et seq.*

2. In § 622.15, paragraph (a) is revised to read as follows:

§ 622.15 Wreckfish individual transferable quota (ITQ) system.

* * * * *

(a) *General*—(1) *Percentage shares*—(i) *Initial ITQ shares.* In accordance with the procedure specified in the Fishery Management Plan for the Snapper-Grouper Fishery of the South Atlantic Region, percentage shares of the quota for wreckfish were assigned at the beginning of the program. Each person was notified by the RA of his or her percentage share and shareholder certificate number.

(ii) *Reverted ITQ shares.* Any shares determined by NMFS to be inactive, will be redistributed proportionately among remaining shareholders (subject to cap restrictions) based on shareholder landings history. Inactive shares are, for purposes of this section, those shares held by ITQ shareholders who have not

reported any wreckfish landings between April 16, 2006, and January 14, 2011.

(iii) *Percentage share set-aside to accommodate resolution of appeals.* During the 2012–2013 fishing year, the RA will reserve 5 percent of wreckfish ITQ shares prior to redistributing shares (see paragraph (a)(1)(ii) of this section) to accommodate resolution of appeals, if necessary. NMFS will distribute any portion of the 5-percent share remaining after the appeals process as soon as possible among the remaining shareholders.

(iv) *Procedure for appealing wreckfish quota share status and landings information.* Appeals must be submitted to the RA postmarked no later than [*date 90 days after the effective date of the final rule*] and must contain documentation supporting the basis for the appeal. The only items subject to appeal are the status of wreckfish quota shares, as active or inactive and the accuracy of the amount of landings. The RA will review and evaluate all appeals, render final decisions on the appeals, and advise the appellant of the final decision. Appeals based on hardship factors will not be considered. The RA will determine the outcome of appeals based on NMFS' logbooks. If NMFS' logbooks are not available, the RA may use state landings records. Appellants must submit NMFS' logbooks or state landings records, as appropriate, to support their appeal.

(2) *Share transfers.* All or a portion of a person's percentage shares are transferrable. Transfer of shares must be reported on a form available from the RA. The RA will confirm, in writing, each transfer of shares. The effective date of each transfer is the confirmation date provided by the RA. NMFS charges a fee for each transfer of shares and calculates the amount in accordance with the procedures of the NOAA Finance Handbook. The handbook is available from the RA. The fee may not exceed such costs and is specified with each transfer form. The appropriate fee must accompany each transfer form.

(3) *ITQ share cap.* No person, including a corporation or other entity, may individually or collectively hold ITQ shares in excess of 49 percent of the total shares. For the purposes of considering the share cap, a corporation's total ITQ share is determined by adding the corporation's ITQ shares to any other ITQ shares the corporation owns in another corporation. If an individual ITQ shareholder is also a shareholder in a corporation that holds ITQ shares, an individual's total ITQ share is determined by adding the applicable ITQ shares held by the individual to the applicable ITQ shares equivalent to the corporate share the individual holds in a corporation. A corporation must provide the RA the identity of the shareholders of the corporation and their percent of shares in the corporation, and provide updated information to the RA within 30 days of when a change occurs. This information must also be provided to the RA any time a commercial vessel permit for wreckfish is renewed or transferred.

* * * * *

[FR Doc. 2012–7604 Filed 3–29–12; 8:45 am]

BILLING CODE 3510–22–P

DEPARTMENT OF COMMERCE

National Oceanic and Atmospheric Administration

50 CFR Part 622

[Docket No. 101202599–0641–01]

RIN 0648–BA52

Fisheries of the Caribbean, Gulf of Mexico, and South Atlantic; Snapper-Grouper Fishery Off the Southern Atlantic States; Amendment 24

AGENCY: National Marine Fisheries Service (NMFS), National Oceanic and Atmospheric Administration (NOAA), Commerce.

ACTION: Proposed rule; request for comments.

SUMMARY: NMFS proposes to implement Amendment 24 to the Fishery Management Plan for the Snapper-Grouper Fishery of the South Atlantic Region (FMP), as prepared by the South Atlantic Fishery Management Council (Council). If implemented, this rule would establish red grouper commercial and recreational sector annual catch limits (ACLs); establish red grouper sector accountability measures (AMs); and remove the combined gag, black grouper, and red grouper commercial quota, and commercial and recreational sector ACLs and AMs. The intent of this rule is to specify ACLs and AMs for red grouper while maintaining catch levels consistent with achieving optimum yield (OY) for the red grouper resource. Additionally, Amendment 24 would implement a rebuilding plan for red grouper in the South Atlantic.

DATES: Written comments must be received on or before April 30, 2012.

ADDRESSES: You may submit comments on the amendment identified by ''NOAA–NMFS–2011–0298'' by any of the following methods:

- *Electronic submissions:* Submit electronic comments via the Federal e-Rulemaking Portal: *http://www.regulations.gov.* Follow the instructions for submitting comments.
- *Mail:* Rick DeVictor, Southeast Regional Office, NMFS, 263 13th Avenue South, St. Petersburg, FL 33701.

Instructions: All comments received are a part of the public record and will generally be posted to *http://www.regulations.gov* without change. All Personal Identifying Information (for example, name, address, etc.) voluntarily submitted by the commenter may be publicly accessible. Do not submit Confidential Business Information or otherwise sensitive or protected information.

To submit comments through the Federal e-rulemaking portal: *http://www.regulations.gov,* click on ''submit a comment,'' then enter ''NOAA–NMFS–2011–0298'' in the keyword search and click on ''search.'' To view posted comments during the comment period, enter ''NOAA–NMFS–2011–0298'' in the keyword search and click on ''search.'' NMFS will accept anonymous comments (enter N/A in the required field if you wish to remain anonymous). You may submit attachments to electronic comments in Microsoft Word, Excel, WordPerfect, or Adobe PDF file formats only.

Comments received through means not specified in this rule will not be considered.

Electronic copies of Amendment 24, which includes an environmental assessment, an initial regulatory flexibility analysis (IRFA), and a regulatory impact review, may be obtained from the Southeast Regional Office Web site at *http://sero.nmfs.noaa.gov/sf/pdfs/SGAmend24_121411.pdf.*

FOR FURTHER INFORMATION CONTACT: Rick DeVictor, telephone: 727–824–5305, or email: *rick.devictor@noaa.gov.*

SUPPLEMENTARY INFORMATION: The snapper-grouper fishery of the South Atlantic is managed under the FMP. The FMP was prepared by the Council and is implemented through regulations at 50 CFR part 622 under the authority of the Magnuson-Stevens Fishery Conservation and Management Act (Magnuson-Stevens Act).

Background

The red grouper stock in the South Atlantic was assessed through the Southeast, Data, Assessment, and Review (SEDAR) process in 2010. The assessment indicates that the stock is experiencing overfishing and is overfished. As required by the

Magnuson-Stevens Act, the Council must implement a rebuilding plan which ends overfishing immediately and provides for rebuilding the fishery. The intent of a rebuilding plan is to increase biomass of overfished stocks to a sustainable level within a specified period of time. A plan should achieve conservation goals, while minimizing to the extent practicable adverse socio-economic impacts. NMFS notified the Council of the red grouper stock status on June 9, 2010, and the Magnuson-Stevens Act specifies that measures to end overfishing and rebuild the stock must be implemented within two years of notification.

The Magnuson-Stevens Act requires that ACLs and AMs be implemented to prevent overfishing and achieve the OY from a fishery. An ACL is the level of annual catch of a stock that if exceeded, triggers AMs. AMs are management controls to prevent ACLs from being exceeded and to correct any overages of ACLs if they occur. Two examples of AMs include an in-season closure if catch approaches the ACL and reducing the ACL by an overage that occurred the previous fishing year.

This rule would divide the red grouper ACL into sector-ACLs based upon allocation decisions and apply sector specific AMs.

Management Measures Contained in This Proposed Rule

Gag, Black Grouper, and Red Grouper, Combined ACLs and AMs

Currently, Federal regulations specify a commercial sector ACL (equivalent to the commercial quota) and recreational sector ACL for gag, black grouper, and red grouper, combined. The current combined gag, black grouper, and red grouper ACLs and AMs were implemented through Amendment 17B to the FMP (75 FR 82280, December 30, 2010), before black grouper and red grouper stock assessments were completed through SEDAR. This rule would remove the gag, black grouper, and red grouper, combined commercial and recreational ACLs and AMs as the ACLs are not based upon the best scientific information. Gag individual ACLs and AMs were previously implemented through Amendment 16 to the FMP (June 29, 2009, 74 FR 30964) and black grouper ACLs and AMs will be implemented through the Comprehensive ACL Amendment (proposed rule published December 1, 2011, 76 FR 74757) and will remain in effect.

This rule would remove this combined species group from the Federal regulations and complete the implementation of measures to specify individual ACLs and AMs for these three species.

Red Grouper Commercial and Recreational Sector ACLs and AMs

Amendment 24 would implement red grouper ACLs and AMs for the commercial and recreational sectors. The Council decided to define the red grouper ACL equal to ABC. The SSC's recommendation for ABC is the projected yield stream with a 70 percent probability of rebuilding success. The Council has chosen to define the rebuilding yield stream at the equivalent of OY (75 percent of fishing mortality (F) at maximum sustainable yield (MSY)(F_{MSY})). The resultant red grouper stock ACLs in this proposed rule are 647,000 lb (293,474 kg) for 2012, 718,000 lb (325,679 kg) for 2013, and 780,000 lb (353,802 kg) for 2014 and subsequent fishing years. If the ACLs, as estimated by the Southeast Fisheries Science Center (SEFSC) are exceeded in a fishing year, then during the following fishing year, the Assistant Administrator for Fisheries (AA) will file a notification with the Office of the Federal Register to state that both the commercial and recreational sectors will not have an increase in their respective sector ACLs during that following fishing year. Additionally, this rule would establish sector specific ACLs for the red grouper commercial and recreational sectors. The commercial sector ACLs would be 284,680 lb (129,129 kg) for 2012, 315,920 lb (143,299 kg) for 2013, and 343,200 lb (155,673 kg) for 2014 and subsequent fishing years. The recreational sector ACLs would be 362,320 lb (164,346 kg) for 2012, 402,080 lb (182,380 kg) for 2013, and 436,800 lb (198,129 kg) for 2014 and subsequent fishing years.

This rule would implement in-season commercial and recreational sector AMs for red grouper. If NMFS-estimated commercial or recreational landings for red grouper reach or are projected to reach the applicable ACL, then NMFS would file a notification with the Office of the Federal Register to close the commercial or recreational sector, as applicable, for the remainder of the fishing year.

This rule would also implement overage adjustments for red grouper. If commercial or recreational landings for red grouper exceed the applicable ACL, NMFS would file a notification with the Office of the Federal Register to reduce the applicable ACL the following fishing year by the amount of the overage in the prior fishing year. In particular, overage adjustments are needed for red grouper to follow guidance for stocks and stock complexes in rebuilding plans that ensure rebuilding occurs within the specified timeframe.

Measures Contained in Amendment 24 That Are Not in This Proposed Rule

Amendment 24 also contains actions that are not specifically addressed through this rulemaking. These items include revising the definitions of management thresholds for South Atlantic red grouper, establishing a red grouper rebuilding plan, specifying commercial and recreational sector allocations, and establishing a recreational sector annual catch target (ACT).

Modify the Current Definitions for Management Thresholds

Definitions of MSY, OY, and minimum stock size threshold (MSST) were set for red grouper in Amendment 11 to the FMP. The Council is revising these definitions based upon the most recent scientific information. Amendment 24 would specify the MSY value for red grouper equal to 1.11 million lb (503,488 kg). The OY would be set equal to the Acceptable Biological Catch (ABC) and ACL. The MSST, which is the overfished definition, would be changed. The current MSST definition specifies MSST at a level reduced from the spawning stock biomass when fishing at the MSY level. The level to be reduced depends on the natural mortality rate of the stock. Amendment 24 would change the MSST definition to 75 percent of the spawning stock biomass when fishing at the MSY level.

Red Grouper Rebuilding Plan

The Council selected a 10-year rebuilding plan for red grouper in Amendment 24. This is the maximum time frame allowed under the Magnuson-Stevens Act. However, because the Council intends to manage the stock using the fishing mortality at OY yield stream, the stock is projected to have an 81 percent chance of rebuilding in 10 years, greater than the 70 percent probability recommended by the Council's SSC. Given management uncertainties and uncertainties regarding stock assessment projections more than a few years in the future, a 10-year rebuilding plan would allow for fluctuations in catches and provide leeway to account for the needs of fishing communities when setting catch levels and management measures.

Red Grouper Commercial and Recreational Sector Allocations

Amendment 24 would implement red grouper sector allocations for the

commercial and recreational sectors. The Council has decided that sector specific ACLs and AMs are important components of red grouper management as each sector differs in its scientific and management uncertainty. The allocation of red grouper among the commercial and recreational sectors is 44 percent and 56 percent, respectively. The allocations were determined by using 50 percent of the average combined commercial and recreational landings from 1986 through 2008, in addition to using 50 percent of average combined landings from 2006 through 2008. This proposed rule would implement ACLs for the red grouper commercial and recreational sectors based on this allocation.

Red Grouper Recreational ACT

Amendment 24 would establish ACTs for the red grouper recreational sector. The ACT is the amount of annual catch of a stock or stock complex that is the management target of the fishery and accounts for management uncertainty in controlling the actual catch below the ACL so that the ACL is not exceeded. The recreational ACTs would be equal to the greater of either half of the recreational ACL or a portion of the recreational ACL, dependent on the precision of the recreational catch estimates. The recreational ACTs established through Amendment 24 would be 271,740 lb (123,259 kg) for 2012, 301,560 lb (136,785 kg) for 2013, and 327,600 lb (148,597 kg) for 2014 and subsequent fishing years. If, in the future, the Council chose to limit recreational harvest to the recreational ACT, which would serve as an in-season AM for the recreational sector, establishing the ACT lower than the recreational ACL would also reduce or eliminate the need to close or implement post-season recreational AMs that are meant to correct for an ACL overage.

Classification

Pursuant to section 304(b)(1)(A) of the Magnuson-Stevens Act, the AA has determined that this proposed rule is consistent with Amendment 24, the Magnuson-Stevens Act and other applicable law, subject to further consideration after public comment.

This proposed rule has been determined to be not significant for purposes of Executive Order 12866.

NMFS prepared an IRFA, as required by section 603 of the Regulatory Flexibility Act, 5 U.S.C. 603, for this rule. The IRFA describes the economic impact that this proposed rule, if adopted, would have on small entities. A description of the proposed rule, why it is being considered, and the objectives of, and legal basis for the rule are contained at the beginning of this section in the preamble and in the **SUMMARY** section of the preamble. A copy of the full analysis is available from the NMFS (see **ADDRESSES**). A summary of the IRFA follows.

The proposed rule would specify a total red grouper ACL as equal to ABC and ABC equal to OY. This proposed rule would allocate the total ACL into 44 percent for the commercial sector and 56 percent for the recreational sector. This rule would also remove the commercial and recreational combined ACLs for black grouper, red grouper, and gag as well as the commercial and recreational AMs associated with the combined ACLs for the three species. The actual levels of the commercial and recreational ACLs are contained at the beginning of this section in the preamble and in the **SUMMARY** section of the preamble.

This proposed rule would implement in-season commercial and recreational sector AMs for red grouper. If commercial and recreational landings for red grouper reach or are projected to reach the applicable ACL, then NMFS would file a notification with the Office of the Federal Register to close the commercial and recreational sectors for the remainder of the fishing year.

This proposed rule would also implement overage adjustments for red grouper. If NMFS estimated commercial or recreational landings for red grouper exceed the applicable ACL, NMFS would file a notification with the Office of the Federal Register to reduce the applicable ACL the following fishing year by the amount of the overage in the prior fishing year. In particular, overage adjustments are needed for red grouper to follow Magnuson-Stevens Act guidance for stocks and stock complexes in rebuilding plans to include overage adjustments that reduce the ACLs in the next fishing year following an ACL overage.

Amendment 24 would establish a recreational ACT equal to the greater of either half of the recreational ACL or a portion of the recreational ACL, dependent on the estimate of precision of the recreational catch.

The intent of this proposed rule and Amendment 24 is to develop and implement a rebuilding plan to end overfishing and rebuild the spawning stock of red grouper by establishing a rebuilding schedule and a rebuilding strategy; specifying or re-specifying ABC, commercial/recreational allocation, ACLs and OY; and establishing ACTs for the recreational sector and AMs for the commercial and recreational sectors. Amendment 24 would also redefine MSY and MSST.

The Magnuson-Stevens Act provides the statutory basis for the proposed rule.

No duplicative, overlapping, or conflicting Federal rules have been identified.

The proposed rule is expected to directly affect commercial fishers and for-hire operators. The Small Business Administration has established size criteria for all major industry sectors in the U.S. including fish harvesters and for-hire operations. A business involved in fish harvesting is classified as a small business if it is independently owned and operated, is not dominant in its field of operation (including its affiliates), and has combined annual receipts not in excess of $4.0 million (NAICS code 114111, finfish fishing) for all its affiliated operations worldwide. For for-hire vessels, other qualifiers apply and the annual receipts threshold is $7.0 million (NAICS code 713990, recreational industries).

From 2005–2009, an annual average of 892 vessels with valid permits to operate in the commercial snapper-grouper fishery landed snapper-grouper, generating dockside revenues of approximately $13.817 million (2009 dollars). Each vessel, therefore, generated an average of approximately $15,500 in gross revenues from snapper-grouper. Gross dockside revenues by area were distributed as follows: $4.196 million in North Carolina, $3.612 million in South Carolina, $3.219 million in Georgia/East Florida, and $2.790 in the west coast of Florida. Vessels that operate in the snapper-grouper fishery may also operate in other fisheries, the revenues of which cannot be determined with available data and are not reflected in these totals.

Based on revenue information, all commercial vessels affected by the proposed action can be considered small entities.

From 2005–2009, an annual average of 2,018 vessels had valid permits to operate in the snapper-grouper for-hire fishery, of which 82 are estimated to have operated as headboats. The for-hire fleet is comprised of charterboats, which charge a fee on a vessel basis, and headboats, which charge a fee on an individual angler (head) basis. The charterboat annual average gross revenue is estimated to range from approximately $62,000–$84,000 for Florida vessels, $73,000–$89,000 for North Carolina vessels, $68,000–$83,000 for Georgia vessels, and $32,000–$39,000 for South Carolina vessels. For headboats, the corresponding estimates are $170,000–$362,000 for Florida

vessels, and $149,000–$317,000 for vessels in the other states.

Based on these average revenue figures, all for-hire operations that would be affected by the proposed action can be considered small entities.

Some fleet activity, i.e., multiple vessels owned by a single entity, may exist in both the commercial and for-hire snapper-grouper sectors but the extent of such activity is unknown, and all vessels are treated as independent entities in this analysis. For this fleet to reach the $4 million threshold, each permitted vessel would have to generate yearly receipts of approximately $333,000. It is not known for certain whether this is the case, but it appears that such a figure of yearly receipts is too high given the above noted average gross revenues per vessel.

The proposed rule is expected to directly affect all federally-permitted commercial and for-hire vessels that operate in the South Atlantic snapper-grouper fishery. All directly affected entities have been determined, for the purpose of this analysis, to be small entities. Therefore, it is determined that the proposed action will affect a substantial number of small entities.

All entities that are expected to be affected by the proposed rule are considered small entities, so the issue of disproportional effects on small versus large entities does not arise in the present case.

The proposed action on the rebuilding strategy, ABC, and ACL would result in an increase in cumulative commercial vessel profits of $990,000 over the first 7 years of the rebuilding schedule with an additional $310,000 generated in years 8 through 10, assuming a discount rate of 7 percent. The corresponding effects on the for-hire vessels would also be an increase in cumulative profits but the magnitude cannot be estimated based on available information. These increases in commercial vessel and for-hire vessel profits are mainly a result of increases in the ACL over time which are assumed to be fully harvested.

To the extent that the proposed action for the commercial/recreational allocation of total ACL would maintain the baseline landings distribution of red grouper between the two sectors, no profit changes to the commercial or for-hire vessels are expected to occur as a direct result of the proposed action.

The proposed action for ACL/OY would provide the largest ACL/OY for red grouper, so that this proposed action may be expected to increase the profits of the commercial and for-hire vessels. The proposed action eliminating the aggregate black grouper, red grouper, and gag quota would tend to ensure profit increases from the largest ACL/OY alternative for red grouper would be realized.

The proposed action on the recreational ACT would have no impacts on the profits of for-hire vessels in the short term, because this measure is not used to trigger AM applications. Should this ACT be used in the future to trigger AMs, then it may be expected to reduce the profits of for-hire vessels. The magnitude of such reduction cannot be estimated with available information.

The proposed in-season and post-season AMs for the commercial sector are expected to limit the increases in the profits of commercial vessels as a result of ACL increases especially since the most recent landings information suggests the proposed series of ACLs would likely be exceeded in the near future.

In principle, the proposed in-season and post-season AMs for the recreational sector are expected to limit the increases in profits of for-hire vessels as a result of ACL increases. However, the most recent (2010) recreational harvest of red grouper was well below the proposed ACL for the recreational sector, suggesting that the proposed AM has a low probability of being triggered in the near future. In effect, the proposed AM for the recreational sector may be expected to have a low likelihood of affecting the profits of for-hire vessels in the near future.

Redefining MSY and MSST and establishing a rebuilding schedule for red grouper would not alter the current harvest or use of the resource and thus would not affect the profitability of small entities.

Defining a rebuilding schedule as the maximum time to rebuild the stock to biomass at MSY would add flexibility in designing management measures that would have the least short-term effects on the profitability of small entities.

Six alternatives, including the preferred alternative, were considered for the rebuilding strategy and ABC. The first alternative, the no action alternative, would not establish a rebuilding strategy for red grouper. Within a rebuilding strategy, the specification of targets and limits, such as ACLs is a crucial component of any management program involving natural resources. Without the designation of these components, regulations may not be sufficient to prevent overfishing and rebuild the stock. The second alternative would define a rebuilding strategy that sets ABC equal to the yield at $F_{REBUILD}$, which is a fishing mortality rate that would have a 70 percent probability of rebuilding success to biomass at MSY in 10 years. This alternative would provide the best profitability scenario for the commercial and for-hire vessels over the entire rebuilding timeframe. However, it would allow a higher fishing mortality rate than what would be appropriate if the stock was not overfished. Both this alternative and the preferred alternative would maintain catches at a similar level to what they have been in recent years, but the preferred alternative is more consistent with fishing at a level that would produce OY. The third alternative would define a rebuilding strategy that sets ABC equal to the yield at 65 percent of F_{MSY}. This alternative would likely result in lower profits to small entities than the preferred alternative, because it would require more restrictive management measures. The fourth alternative would define a rebuilding strategy that sets ABC equal to the yield at $F_{REBUILD}$, which is a fishing mortality rate that would have a 70 percent probability of rebuilding success to biomass at MSY in 7 years. This alternative would likely result in lower profits to small entities than the preferred alternative, because it would require more restrictive management measures. The fifth alternative would define a rebuilding strategy that sets ABC equal to the yield at $F_{REBUILD}$, which is a fishing mortality rate that would have a 70 percent probability of rebuilding success to biomass at MSY in 8 years. This alternative would likely result in lower profits to small entities than the preferred alternative, because it would require more restrictive management measures.

Two alternatives were considered for sector allocation, with one alternative being the no action alternative which would not establish sector allocation and the second would establish sector allocation. The no action alternative would not allow specification of sector ACLs and corresponding AMs, such that both sectors would be accountable for any ACL overages even if there is only one sector responsible for an ACL overage. Under the second alternative, five sub-alternatives including the preferred sub-alternative were considered. The first sub-alternative would establish a 52 percent commercial and 48 percent recreational allocation; the second sub-alternative, 54 percent commercial and 46 percent recreational allocation; the third sub-alternative, 49 percent commercial and 51 percent recreational allocation; and, the fourth sub-alternative, 41 percent commercial and 59 percent recreational allocation. All of these alternatives, including the preferred alternative,

would base the allocation ratio solely on a sector distribution of landings. No economic valuation was considered due to the absence of sufficient information. In terms of effects on the profits of small entities, the general nature of the various allocation alternatives is to favor one sector over another. The higher the allocation to one sector, the higher would be the profit potential to that sector and the lower would be the profit potential to the other sector. Among the alternatives, the preferred alternative was found to have neutral effects on profits on both the commercial and for-hire vessels, because the resulting allocation would be the same as the historical sector distribution of landings used as the baseline landings distribution.

Six alternatives, including the three preferred alternatives, were considered for ACL and OY. The three preferred alternatives are not mutually exclusive but are rather complementary to one another. The first alternative, the no action alternative, would not establish a specific ACL for red grouper. This alternative would not allow for specific management actions to address the overfished/overfishing status of the red grouper stock. The second alternative would specify an ACL for red grouper equal to OY and OY equal to 90 percent of ABC. This alternative would result in lower profit potential to small entities than the preferred alternative. The third alternative would specify an ACL for red grouper equal to OY and OY equal to 80 percent of ABC. This alternative would result in lower profit potential to small entities than the preferred alternative.

Three alternatives, including the preferred alternative, were considered for the commercial sector ACT. The first and second alternatives would set the commercial ACT equal to 90 percent and 80 percent of commercial ACL, respectively. If ACTs were used to trigger AM applications, these two alternatives would result in lower profits to small entities than the preferred alternative. The Council chose not to establish a commercial ACT (no action alternative) because the current method to track commercial harvests is adequate to determine whether the commercial ACL is met or projected to be met.

Four alternatives, including the preferred alternative, were considered for the recreational ACT. The first alternative, the no action alternative, would not specify a recreational ACT for red grouper. This alternative would not allow consideration of management uncertainty which is deemed high in the recreational sector. Without consideration of management uncertainty, the probability of exceeding the ACL would be relatively high, increasing the probability of implementing more stringent management measures. The second and third alternatives would specify a recreational ACT equal to 85 percent and 75 percent of the recreational ACL, respectively. The second alternative would likely result in the same effects on the short-run profits of small entities as the preferred alternative. The third alternative would likely result in lower profits to small entities than the preferred alternative. These short-run effects of the ACT alternatives assume that ACTs would be used in the future to trigger AM applications.

Three alternatives, including the two preferred alternatives, were considered for the commercial AM. The two preferred alternatives are not mutually exclusive but rather complementary to one another. The only alternative to the preferred alternatives is the no action alternative, which would not specify a commercial AM for red grouper. This alternative would retain the current commercial AM specified for the group of species consisting of red grouper, black grouper, and gag. This particular AM could be either more or less restrictive than the preferred AM alternatives specified for red grouper, but it would not allow implementing management measures that would specifically address the overfished and undergoing overfishing condition of the red grouper stock. In addition, the current AM for the aggregate species of red grouper, black grouper, and gag does not provide for post-season AMs. The lack of post-season AMs under the no action alternative would result in higher short-term profits to small entities than the preferred alternative. However, there is an expectation that the long-term profit environment would be better under the preferred alternatives because they would provide for higher ACLs over time, and therefore higher profits on a more sustainable basis. It should also be noted that a separate commercial sector ACL/AM for black grouper will be implemented through the Comprehensive ACL Amendment (proposed rule published on December 1, 2011, 76 FR 74757), negating the need for the aggregate species ACL/AM.

Four alternatives were considered for the recreational AM. The first alternative is the no action alternative which would not set a specific recreational AM for red grouper. This alternative would retain the current recreational AM specified for the group of species consisting of red grouper, black grouper, and gag. This particular AM could be either more or less restrictive than the preferred AM alternatives specified for red grouper, but it would not allow implementing management measures that would specifically address the overfished/overfishing condition of the red grouper stock. It should also be noted that a separate recreational sector ACL/AM for black grouper will be implemented through the Comprehensive ACL Amendment, negating the need for the aggregate species ACL/AM.

The second alternative would specify a recreational sector AM trigger and includes five sub-alternatives, including the preferred sub-alternative. The first sub-alternative would not specify a recreational sector AM trigger. This sub-alternative would likely result in higher profits to small entities than the preferred sub-alternative. However, it would not address the overfished/overfishing condition of red grouper. The second sub-alternative specifies that AM would be triggered if the mean recreational landings for the past 3 years exceed the recreational ACL. The profit environment for small entities under this sub-alternative may be lower or higher than that of the preferred sub-alternative, depending on whether the trend in landings is upward or downward.

The third sub-alternative specifies that the AM would be triggered if the modified mean (highest and lowest landings dropped) landings for the past 5 years exceed the recreational sector ACL. This sub-alternative would have the same effects on profitability as the second sub-alternative, although the magnitude may be lower. The fourth sub-alternative specifies that the AM would be triggered if the lower bound of the 90 percent confidence interval estimate of the Marine Recreational Fishing Statistical Survey landings' population mean plus headboat landings is greater than the recreational ACL. This sub-alternative is likely to produce the same effects on profitability as the first sub-alternative, but the magnitude could be lower or higher.

The third alternative for a recreational sector AM would specify a recreational sector in-season AM and includes two sub-alternatives, of which one is the preferred sub-alternative. The only sub-alternative to the preferred alternative is the no action alternative which would not specify a recreational in-season AM. This alternative would result in higher short-term profits to small entities, but it would not constrain recreational fishing pressure and thus would not aid in addressing the overfished/overfishing condition for red grouper.

The fourth alternative for a recreational sector AM would specify a recreational sector post-season AM if the current fishing year's recreational sector ACL is exceeded, and includes seven sub-alternatives, of which one is the preferred sub-alternative. The first sub-alternative would not specify a recreational sector post-season AM. This sub-alternative would result in higher short-term profits to small entities than the preferred alternative, although the expectation is for long-term profitability to better under the preferred sub-alternative. The second sub-alternative would compare the recreational sector ACL with the 2011 landings for 2011, with the mean 2011 and 2012 landings for 2012, and mean landings of the most recent 3 years for 2013 and beyond for triggering a post-season AM. This sub-alternative may or may not have the same sort of effects on profitability as the preferred alternative, depending on the specific AM measure that would be implemented.

The third sub-alternative specifies monitoring the following year's landings for persistence in increased landings, with the Regional Administrator (RA) taking management actions as necessary. This sub-alternative would likely result in the lower adverse effects on short-term profits than the preferred alternative, although the actual effects would depend on the type of restrictions that would be imposed by the RA. The fourth sub-alternative specifies monitoring the following year's landings for persistence in increased landings, with the RA publishing a notice in the **Federal Register** to reduce the recreational fishing season as necessary. This sub-alternative would likely result in less adverse effects on short term profits than the preferred sub-alternative to the extent that post-season AM may not be imposed depending on how persistent the upward trend in landings would be. If a post-season AM were necessary, this sub-alternative could still result in higher profits than the preferred alternative since it would set a specific red grouper recreational season closure date, allowing for-hire vessels to make the necessary changes in their operations.

The fifth sub-alternative specifies monitoring the following year's landings for persistence in increased landings, with the RA publishing a notice in the **Federal Register** to reduce the recreational bag limit as necessary to prevent harvest from exceeding the recreational ACL. This sub-alternative would likely result in less adverse effects on short term profits than the preferred sub-alternative to the extent that post-season AMs may not be imposed depending on how persistent the upward trend in landings would be. If a post-season AM were necessary, this sub-alternative could still result in higher profits than the preferred alternative since it would allow for-hire vessels to operate year round, although at lower bag limits. The sixth sub-alternative specifies that the RA publish a notice in the **Federal Register** to reduce the following year's recreational fishing season to ensure landings do not exceed the following fishing season's recreational ACL. There is a good possibility that this sub-alternative would result in the same fishing season length as the preferred alternative, assuming no significant changes in effort would occur in the following fishing year. It is possible that other measures, like a bag limit reduction, may be employed under the preferred alternative to effect a longer season that would provide more fishing opportunities. Whichever of these two sub-alternatives can provide more fishing opportunities may be considered better than the other from the standpoint of profits to small entities.

Two alternatives, including the preferred alternative, were considered for redefining MSY. The first alternative, the no action alternative, would retain the definition of MSY which would not reflect the conclusions of the latest stock assessment. This alternative, like the preferred alternative, would not directly affect the profitability of small entities.

Five alternatives, including the preferred alternative, were considered for redefining MSST. The first alternative, the no action alternative, would retain the definition of MSST as equal to natural mortality (M) times the biomass at MSY. The second alternative would set MSST equal to 50 percent of biomass at MSY. The third alternative would set MSST equal to 85 percent of biomass at MSY. The fourth alternative would set MSST as the minimum stock size at which rebuilding to MSY would be expected to occur within 10 years at the maximum fishing mortality threshold level. All these alternatives, like the preferred alternative, would not directly affect the profitability of small entities.

Five alternatives, including the preferred alternative, were considered for the rebuilding schedule. The first alternative, the no action alternative, would not implement a rebuilding schedule. This alternative would not comply with Magnuson-Stevens Act requirement to rebuild an overfished red grouper stock. The second, third, and fourth alternatives would establish a rebuilding period of 3 years (shortest), 7 years, and 8 years, respectively. These other alternatives would provide for a shorter rebuilding timeframe than the preferred alternative, and thus may be expected to restrict the flexibility in designing management measures that would minimize the economic effects on the profits of small entities.

List of Subjects in 50 CFR Part 622

Fisheries, Fishing, Puerto Rico, Reporting and recordkeeping requirements, Virgin Islands.

Dated: March 27, 2012.

Alan D. Risenhoover,

Acting Deputy Assistant Administrator for Regulatory Programs, National Marine Fisheries Service.

For the reasons set out in the preamble, 50 CFR part 622 is proposed to be amended as follows:

PART 622—FISHERIES OF THE CARIBBEAN, GULF, AND SOUTH ATLANTIC

1. The authority citation for part 622 continues to read as follows:

Authority: 16 U.S.C. 1801 *et seq.*

§ 622.42 [Amended]

2. In § 622.42, paragraph (e)(8) is removed.

3. In § 622.43, paragraph (a)(5)(iii) is revised to read as follows:

§ 622.43 Closures.

(a) * * *

(5) * * *

(iii) For gag, when the appropriate commercial quota is reached, the provisions of paragraph (a)(5)(i) and (ii) of this section apply to gag and all other SASWG.

* * * * *

4. In § 622.49, paragraph (b)(4) is revised to read as follows:

§ 622.49 Annual Catch Limits (ACLs) and Accountability Measures (AMs).

* * * * *

(b) * * *

(4) *Red grouper*—(i) *Commercial sector.* (A) If commercial landings for red grouper, as estimated by the SRD, reach or are projected to reach the applicable ACL in paragraph (b)(4)(i)(C) of this section, the AA will file a notification with the Office of the Federal Register to close the commercial sector for the remainder of the fishing year. On and after the effective date of such a notification, all sale or purchase of red grouper is prohibited and harvest or possession of this species in or from the South Atlantic EEZ is limited to the bag and possession limit. This bag and possession limit applies in the South

Atlantic on board a vessel for which a valid Federal charter vessel/headboat permit for South Atlantic snapper-grouper has been issued, without regard to where such species were harvested, *i.e.* in state or Federal waters.

(B) If commercial landings exceed the ACL, the AA will file a notification with the Office of the Federal Register, at or near the beginning of the following fishing year to reduce the ACL for that following year by the amount of the overage in the prior fishing year.

(C) The applicable commercial ACLs, in round weight, are 284,680 lb (129,129 kg) for 2012, 315,920 lb (143,299 kg) for 2013, and 343,200 lb (155,673 kg) for 2014 and subsequent fishing years.

(ii) *Recreational sector.* (A) If recreational landings for red grouper, as estimated by the SRD, are projected to reach the applicable ACL in paragraph (b)(4)(ii)(C) of this section, the AA will file a notification with the Office of the Federal Register to close the recreational sector for the remainder of the fishing year. On and after the effective date of such a notification, the bag and possession limit is zero. This bag and possession limit applies in the South Atlantic on board a vessel for which a valid Federal charter vessel/headboat permit for South Atlantic snapper-grouper has been issued, without regard to where such species were harvested, i.e. in state or Federal waters.

(B) If recreational landings for red grouper, as estimated by the SRD, exceed the applicable ACL, the AA will file a notification with the Office of the Federal Register, to reduce the recreational ACL the following fishing year by the amount of the overage in the prior fishing.

(C) The applicable recreational ACLs, in round weight, are 362,320 lb (164,346 kg) for 2012, 402,080 lb (182,380 kg) for 2013, and 436,800 lb (198,129 kg) for 2014 and subsequent fishing years.

(iii) Without regard to overfished status, if the combined commercial and recreational sector ACL (total ACL), as estimated by the SRD, is exceeded in a fishing year, then during the following fishing year, an automatic increase will not be applied to the commercial and recreational sector ACLs during that following fishing year. The SRD will evaluate the landings data to determine whether or not an increase in the respective sector ACLs will be applied. The applicable combined commercial and recreational sector ACLs, in round weight are 647,000 lb (293,474 kg) for 2012, 718,000 lb (325,679 kg) for 2013, and 780,000 lb (353,802 kg) for 2014 and subsequent fishing years.

(A) Following an overage of the total ACL, if there is no overage the following fishing year, the SRD will evaluate the landings data to determine whether or not an increase in the respective sector ACLs will be applied.

(B)[Reserved]

* * * * *

[FR Doc. 2012–7721 Filed 3–29–12; 8:45 am]

BILLING CODE 3510–22–P

DEPARTMENT OF COMMERCE

National Oceanic and Atmospheric Administration

50 CFR Part 635

RIN 0648–XA920

Atlantic Highly Migratory Species; 2012 Atlantic Bluefin Tuna Quota Specifications

AGENCY: National Marine Fisheries Service (NMFS), National Oceanic and Atmospheric Administration (NOAA), Commerce.

ACTION: Notice of public hearings.

SUMMARY: On March 16, 2012, NMFS published a proposed rule to establish 2012 BFT quota specifications, and announced that public hearings would be scheduled in a future notice. In this notice NMFS is announcing public hearings in Gloucester, MA, and Silver Spring, MD, in order to provide greater opportunity for public comment on the proposed rule.

DATES: A hearing will be held on April 4, 2012, from 2 to 4 p.m. in Gloucester, MA, and a hearing will be held on April 10, 2012, from 2:30 to 4 p.m. in Silver Spring, MD. Public comments on the proposed rule must be received on or before April 16, 2012. See **SUPPLEMENTARY INFORMATION** for further details.

ADDRESSES: As published on March 16, 2012 (77 FR 15712), you may submit comments, identified by ''NOAA–NMFS–2012–0048'', by any one of the following methods:

- *Electronic Submissions:* Submit all electronic public comments via the Federal eRulemaking Portal *http://www.regulations.gov.* To submit comments via the e-Rulemaking Portal, first click the ''submit a comment'' icon, then enter ''NOAA–NMFS–2012–0048'' in the keyword search. Locate the document you wish to comment on from the resulting list and click on the ''Submit a Comment'' icon on the right of that line.
- *Fax:* 978–281–9340, Attn: Sarah McLaughlin.
- *Mail:* Sarah McLaughlin, Highly Migratory Species Management Division, Office of Sustainable Fisheries (F/SF1), NMFS, 55 Great Republic Drive, Gloucester, MA 01930.
- *Instructions:* Comments must be submitted by one of the above methods to ensure that the comments are received, documented, and considered by NMFS. Comments sent by any other method, to any other address or individual, or received after the end of the comment period, may not be considered. All comments received are a part of the public record and will generally be posted for public viewing on *http://www.regulations.gov* without change. All personal identifying information (e.g., name, address, etc.) submitted voluntarily by the sender will be publicly accessible. Do not submit confidential business information, or otherwise sensitive or protected information. NMFS will accept anonymous comments (enter ''N/A'' in the required fields if you wish to remain anonymous). Attachments to electronic comments will be accepted in Microsoft Word or Excel, WordPerfect, or Adobe PDF file formats only.

Supporting documents, including the 2011 Environmental Assessment, Regulatory Impact Review, and Final Regulatory Flexibility Analysis, as well as others, such as the Highly Migratory Species Fishery Management Plans may be downloaded from the HMS Web site at *www.nmfs.noaa.gov/sfa/hms/.* These documents also are available by sending your request to Sarah McLaughlin at the mailing address specified above.

The public hearing locations are:

1. Gloucester, MA—NMFS, 55 Great Republic Drive, Gloucester, MA 01930.
2. Silver Spring, MD—NMFS Science Center, 1301 East-West Highway, Silver Spring, MD 20910.

FOR FURTHER INFORMATION CONTACT: Sarah McLaughlin or Brad McHale, 978–281–9260.

SUPPLEMENTARY INFORMATION: Atlantic bluefin tuna, bigeye tuna, albacore tuna, yellowfin tuna, and skipjack tuna (hereafter referred to as ''Atlantic tunas'') are managed under the dual authority of the Magnuson-Stevens Fishery Conservation and Management Act (Magnuson-Stevens Act) and the Atlantic Tunas Convention Act (ATCA). As an active member of the International Commission for the Conservation of Atlantic Tunas (ICCAT), the United States implements binding ICCAT recommendations to comply with this international treaty. ATCA authorizes the Secretary of Commerce (Secretary) to promulgate regulations, as may be necessary and appropriate, to implement ICCAT recommendations. The authority to issue regulations under the Magnuson-Stevens Act and ATCA

has been delegated from the Secretary to the Assistant Administrator for Fisheries, NMFS.

In the proposed rule, NMFS indicated that dates and locations for public hearings on the proposed action would be specified in a separate document in the **Federal Register** to be published at a later date. In this document, NMFS is announcing that it will hold a public hearing in Gloucester, MA, and one in Silver Spring, MD. These hearings, in addition to written comment collected via the methods described above, will allow NMFS to collect public comments on the proposed rule, which will assist NMFS in determining the final 2012 BFT quota specifications, consistent with the 2006 Consolidated HMS FMP, the Magnuson-Stevens Act, ATCA, and other applicable law.

Dated: March 26, 2012.

Emily H. Menashes,

Acting Director, Office of Sustainable Fisheries, National Marine Fisheries Service.

[FR Doc. 2012–7578 Filed 3–26–12; 4:15 pm]

BILLING CODE 3510–22–P

Notices

Federal Register
Vol. 77, No. 62
Friday, March 30, 2012

This section of the FEDERAL REGISTER contains documents other than rules or proposed rules that are applicable to the public. Notices of hearings and investigations, committee meetings, agency decisions and rulings, delegations of authority, filing of petitions and applications and agency statements of organization and functions are examples of documents appearing in this section.

DEPARTMENT OF AGRICULTURE

Forest Service

Beaverhead-Deerlodge National Forest, Jefferson Ranger District, Montana, Boulder River Salvage and Vegetation Management Project

AGENCY: Forest Service, USDA.

ACTION: Notice of intent to prepare an environmental impact statement.

SUMMARY: The project proposes to salvage by clearcut harvest dead and lodgepole pine infested or at risk of infestation with mountain pine beetle; use biomass removal, commercial thinning, and prescribed fire to reduce stand density on lodgepole pine and Douglas-fir stands; and remove Douglas-fir that is encroaching upon quaking aspen clones and shrublands/grasslands. Treatments would occur on about 24,940 total acres (346 total units) of National Forest System Lands north of Whitehall, MT.

DATES: Comments concerning the scope of the analysis must be received by April 30, 2012. The draft environmental impact statement is expected in May 2013 and the final environmental impact statement is expected in May 2014.

ADDRESSES: Send written comments to District Ranger, Beaverhead-Deerlodge National Forest, Butte-Jefferson Ranger District, 1820 Meadowlark Lane, Butte, MT 59701. Comments may also be sent via email to *comments-northern-beaverhead-deerlodge-butte@fs.fed.us,* please indicate Boulder River Project in the subject line or via facsimile to (406) 494–0269; again please indicate Boulder River Project.

FOR FURTHER INFORMATION CONTACT: Karen Gallogly, Project Coordinator, at *kgallogly@fs.fed.us* (406–683–3853); or Peri Suenram, Acting District Ranger at *psuenram@fs.fed.us* (406–494–2147).

Individuals who use telecommunication devices for the deaf (TDD) may call the Federal Information Relay Service (FIRS) at 1–800–877–8339 between 8 a.m. and 8 p.m., Eastern Time, Monday through Friday.

SUPPLEMENTARY INFORMATION:

Purpose and Need for Action

The purpose and need for this project is to harvest merchantable wood products from larger diameter lodgepole pine forested stands infested, or at risk for infestation, with bark beetles, before the value of the wood deteriorates; reduce stand density in lodgepole pine and Douglas-fir stands to maintain or improve resilient forest conditions; remove encroaching Douglas-fir from shrublands and grasslands that historically lacked conifir species; create early seral conditions in mid to higher-elevation lodgepole pine stands to improve resiliency to natural disturbances; and improve riparian-associated aspen and upland aspen clones by removing encroaching conifers to improve growing conditions.

Proposed Action

The Proposed Action would (1) salvage dead and dying lodgepole pine using clearcut harvest methods on 6,174 acres over 106 units; (2) use biomass removal to treat 2,626 acres within 36 units of younger, predominantly lodgepole pine stands, many of which have been previously harvested; (3) use a combination of commercial thinning and lodgepole pine salvage (clearcut harvest) on 439 acres in three units; (4) remove conifers for aspen restoration on 2,892 acres within 86 units; (5) use prescribed fire on 4,596 acres across 13 units in Restoration and Fish Key Watersheds that are are inoperable and unfeasible for conventional mechanized harvest; (6) non-commercially thin Douglas-fir and burn slash on 8,212 acres within 102 units.

Approximately 210 miles of existing roads would be used as haul routes within the project area and approximately 8 to16 miles of temporary roads would be constructed for access to some commercial units. No temporary roads would cross streams and all temporary roads would be obliterated after use.

Responsible Official

Forest Supervisor for the Beaverhead-Deerlodge National Forest, Dave Myers, 420 Barrett St., Dillon, MT 59725–3572.

Nature of Decision To Be Made

Given the purpose and need for the proposal the Responsible Official will decide whether or not to implement salvage harvest of dead and dying lodgepole pine infested with mountain pine beetle and which units to harvest; whether or not to reduce stand density in lodgepole pine and Douglas-fir stands, which methods to use and what units to treat; whether or not to remove encroaching conifers from grasslands and shrublands, and which units to treat; and whether or not to restore aspen clones and which units to treat.

Scoping Process

This notice of intent initiates the scoping process, which guides the development of the environmental impact statement. A scoping package, including a detailed description and map of the project will be sent to individuals, groups and organization already expressing interest in the project and anyone requesting further information.

It is important that reviewers provide their comments at such times and in such manner that they are useful to the agency's preparation of the environmental impact statement. Therefore, comments should be provided prior to the close of the comment period and should clearly articulate the reviewer's concerns and contentions.

Comments received in response to this solicitation, including names and addresses of those who comment, will become part of the public record for this proposed action. Comments submitted anonymously will be accepted and considered; however, anonymous comments will not provide the Agency with the ability to provide the respondent with subsequent environmental documents.

Dated: March 23, 2012.

Charles A Mark,

Deputy Forest Supervisor.

[FR Doc. 2012–7685 Filed 3–29–12; 8:45 am]

BILLING CODE 3410–11–P

DEPARTMENT OF COMMERCE

Submission for OMB Review; Comment Request

The Department of Commerce will submit to the Office of Management and

Budget (OMB) for clearance the following proposal for collection of information under the provisions of the Paperwork Reduction Act (44 U.S.C. chapter 35).

Agency: National Institute of Standards and Technology (NIST).

Title: Survey of the Need for the Improvement of the Infrared Reflectance Measurements Standards.

OMB Control Number: None.

Form Number(s): None.

Type of Request: Regular submission (new information collection).

Burden Hours: 50 Hours.

Number of Respondents: 100.

Average Hours Per Response: 30 minutes.

Needs and Uses: The Sensor Science Division (SSD) of the Physical Measurement Laboratory (PML) of NIST is responsible for providing standards for the characterization of the optical properties of materials for the United States. This serves the needs of a wide range of industries as well as government and academic laboratories. For many years, the SSD has been working to establish physical standards, measurement methods and measurement services in the infrared, and in recent years there have been numerous inquiries and requests for NIST to address specific needs, many of which are related to infrared reflectance. The purpose of this survey is to assess infrared optical properties measurement community needs for standard reference materials, calibration services, workshops, courses, and other means for improvement of the quality of their measurement data and traceability to national standards.

Affected Public: Business or other for-profit organizations; Not-for-profit institutions; Federal government; State, local, or tribal government.

Frequency: Once.

Respondent's Obligation: Voluntary.

OMB Desk Officer: Jasmeet Seehra, (202) 395–3123.

Copies of the above information collection proposal can be obtained by calling or writing Jennifer Jessup, Departmental Paperwork Clearance Officer, (202) 482–0336, Department of Commerce, Room 6616, 14th and Constitution Avenue NW., Washington, DC 20230 (or via the Internet at *JJessup@doc.gov*).

Written comments and recommendations for the proposed information collection should be sent within 30 days of publication of this notice to, OMB Desk Officer, Jasmeet Seehra, (202) 395–3123, Fax Number (202) 395–5167, or *Jasmeet_K._Seehra@omb.eop.gov*).

Dated: March 27, 2012.

Gwellnar Banks,

Management Analyst, Office of the Chief Information Officer.

[FR Doc. 2012–7641 Filed 3–29–12; 8:45 am]

BILLING CODE 3510–13–P

DEPARTMENT OF COMMERCE

Economic Development Administration

Proposed Information Collection; Comment Request; Comprehensive Economic Development Strategy

AGENCY: Economic Development Administration (EDA), Department of Commerce.

ACTION: Notice.

SUMMARY: The Department of Commerce, as part of its continuing effort to reduce paperwork and respondent burden, invites the general public and other Federal agencies to take this opportunity to comment on proposed and/or continuing information collections, as required by the Paperwork Reduction Act of 1995, as amended.

DATES: Written comments must be submitted on or before May 29, 2012.

ADDRESSES: Direct all written comments to Jennifer Jessup, Departmental Paperwork Clearance Officer, Department of Commerce, Room 6616, 14th Street and Constitution Avenue NW., Washington, DC 20230 (or via the Internet at *JJessup@doc.gov*).

FOR FURTHER INFORMATION CONTACT: Requests for additional information or copies of the information collection instrument and instructions should be directed to John Cobb, Program Analyst, Office of Regional Affairs, Room 7009, Economic Development Administration, Washington, DC 20230, telephone (202) 482–0951, facsimile (202) 482–2838 (or via the Internet at *John.f.cobb@eda.gov*).

SUPPLEMENTARY INFORMATION:

I. Abstract

The mission of the Economic Development Administration (EDA) is to lead the Federal economic agenda by promoting innovation and competitiveness, preparing American regions for growth and success in the worldwide economy. In order to effectively administer and monitor its economic development assistance programs, EDA collects certain information from applications for, and recipients of, EDA investment assistance. This 60-day **Federal Register** Notice covers: Comprehensive Economic Development Strategy.

A Comprehensive Economic Development Strategy (CEDS) is required to qualify for EDA investment assistance under its Public Works, Economic Adjustment, and most planning programs, and is a prerequisite for a region's designation by EDA as an Economic Development District (*see* 13 CFR 303, 305.2, and 307.2 of EDA's regulations). This collection of information is required to ensure that the recipient is complying with EDA's CEDS requirement.

II. Method of Collection

Paper and electronic submissions.

III. Data

OMB Control Number: 0610–0093.

Form Number(s): None.

Type of Review: Regular submission.

Affected Public: Not-for-profit institutions; Federal government; State, local, or tribal government; Business or other for-profit organizations.

Estimated Number of Annual Responses: 552.

Estimated Time per Response: 480 hours for the initial CEDS for a District organization or other planning organization funded by EDA; 160 hours for the CEDS revision required at least every 5 years from an EDA-funded District or other planning organization; 40 hours for the annual updated CEDS performance report required of EDA-funded District or other planning organizations; 40 hours per applicant for EDA Public Works or Economic Adjustment assistance with a project deemed by EDA to 'merit further consideration' that is not located in an EDA-funded District.

Estimated Total Annual Burden Hours: 31,295.

Estimated Total Annual Cost: $0.

IV. Request for Comments

Comments are invited on: (a) Whether the proposed collection of information is necessary for the proper performance of the functions of the agency, including whether the information shall have practical utility; (b) the accuracy of the agency's estimate of the burden (including hours and cost) of the proposed collection of information; (c) ways to enhance the quality, utility, and clarity of the information to be collected; and (d) ways to minimize the burden of the collection of information on respondents, including through the use of automated collection techniques or other forms of information technology.

Comments submitted in response to this notice will be summarized and/or included in the request for OMB approval of this information collection;

they also will become a matter of public record.

Dated: March 27, 2012.

Glenna Mickelson,

Management Analyst, Office of the Chief Information Officer.

[FR Doc. 2012–7647 Filed 3–29–12; 8:45 am]

BILLING CODE 3510–34–P

DEPARTMENT OF COMMERCE

Foreign-Trade Zones Board

[Docket T–1–2012]

Foreign-Trade Zone 267, Temporary/Interim Manufacturing Authority, CNH America, LLC, Agricultural and Construction Equipment; Notice of Approval

On January 12, 2012, the Executive Secretary of the Foreign-Trade Zones (FTZ) Board filed an application submitted by the Fargo Municipal Airport Authority, grantee of FTZ 267, requesting to expand manufacturing under temporary/interim manufacturing (T/IM) authority to include subassemblies and parts of tractors, combines, and wheel loaders, on behalf of CNH America LLC, within FTZ 267—Site 2, in Fargo, North Dakota.

The application was processed in accordance with T/IM procedures, as authorized by FTZ Board Orders 1347 (69 FR 52857, 8/30/04) and 1480 (71 FR 55422, 9/22/06), including notice in the **Federal Register** inviting public comment (77 FR 2699, 1/19/2012). The FTZ staff examiner reviewed the application and determined that it meets the criteria for approval under T/IM procedures. Pursuant to the authority delegated to the FTZ Board Executive Secretary in the above-referenced Board Orders, the application is approved, effective this date, until March 22, 2012, subject to the FTZ Act and the Board's regulations, including Section 400.28.

Dated: March 23, 2012.

Andrew McGilvray,

Executive Secretary.

[FR Doc. 2012–7598 Filed 3–29–12; 8:45 am]

BILLING CODE 3510–DS–M

DEPARTMENT OF COMMERCE

Bureau of Industry and Security

Emerging Technology and Research Advisory Committee; Notice of Partially Closed Meeting

The Emerging Technology and Research Advisory Committee (ETRAC) will meet on April 16, 2012, 8:30 a.m., Room 6527, (closed session) and April 17, 2012, 8:30 a.m., Room 3884, (open session) at the Herbert C. Hoover Building, 14th Street between Pennsylvania and Constitution Avenues NW., Washington, DC. The Committee advises the Office of the Assistant Secretary for Export Administration on emerging technology and research activities, including those related to deemed exports.

Agenda

Monday, April 16

Closed Session: 8:30 a.m.–5 p.m.

Discussion of matters determined to be exempt from the provisions relating to public meetings found in 5 U.S.C. app. 2 10(a)(1) and l0(a)(3).

The Assistant Secretary for Administration, with the concurrence of the delegate of the General Counsel, formally determined on March 20, 2012, pursuant to Section l0(d) of the Federal Advisory Committee Act, as amended, that the portion of the meeting dealing with matters which would be likely to frustrate significantly implementation of a proposed agency action as described in 5 U.S.C. 552b(c)(9)(B) shall be exempt from the provisions relating to public meetings found in 5 U.S.C. app. 2 10(a)1 and 10(a)(3). The remaining portions of the meeting will be open to the public.

Tuesday, April 17

Open Session: 8:30 a.m.–3:30 p.m.

1. ETRAC Committee Business.
2. Nanotechnology—Nanocoated Materials.
3. Science and Engineering Indicators.
4. ETRAC Committee Discussion.
5. Planning for Next Meeting.

The open sessions will be accessible via teleconference to 40 participants on a first come, first serve basis. To join the conference, submit inquiries to Ms. Yvette Springer at *Yvette.Springer@bis.doc.gov* no later than April 9, 2012.

A limited number of seats will be available for the public session. Reservations are not accepted. To the extent that time permits, members of the public may present oral statements to the Committee. The public may submit written statements at any time before or after the meeting. However, to facilitate the distribution of public presentation materials to the Committee members, the Committee suggests that presenters forward the public presentation materials prior to the meeting to Ms. Springer via email.

For more information, call Yvette Springer at (202) 482–2813.

Dated: March 26, 2012.

Yvette Springer,

Committee Liaison Officer.

[FR Doc. 2012–7720 Filed 3–29–12; 8:45 am]

BILLING CODE 3510–JT–P

DEPARTMENT OF COMMERCE

International Trade Administration

Initiation of Antidumping and Countervailing Duty Administrative Reviews and Request for Revocation in Part, and Deferral of Administrative Review

AGENCY: Import Administration, International Trade Administration, Department of Commerce.

SUMMARY: The Department of Commerce (''the Department'') has received requests to conduct administrative reviews of various antidumping and countervailing duty orders and findings with February anniversary dates. In accordance with the Department's regulations, we are initiating those administrative reviews. The Department received a request to revoke one antidumping duty order in part. The Department also received a request to defer the initiation of an administrative review for one anitdumping duty order.

DATES: *Effective Date:* March 30, 2012.

FOR FURTHER INFORMATION CONTACT: Brenda E. Waters, Office of AD/CVD Operations, Customs Unit, Import Administration, International Trade Administration, U.S. Department of Commerce, 14th Street and Constitution Avenue NW., Washington, DC 20230, telephone: (202) 482–4735.

SUPPLEMENTARY INFORMATION:

Background

The Department has received timely requests, in accordance with 19 CFR 351.213(b), for administrative reviews of various antidumping and countervailing duty orders and findings with February anniversary dates. With respect to the antidumping duty orders on Certain Frozen Warmwater Shrimp from Brazil, India, and Thailand, the initiation of the antidumping duty administrative review for these cases will be published in a separate initiation notice. The Department received a timely request to revoke in part the antidumping duty order on Certain Frozen Warmwater Shrimp from the People's Republic of China with respect to one exporter. The Department also received a request in accordance with 19 CFR 351.213(c) to defer for one year the initiation of the February 1, 2011, through January 31, 2012, administrative review of the antidumping duty order on Stainless

Steel Bar from Japan. The Department received no objections to this request from any party cited in 19 CFR 351.213(c)(1)(ii).

All deadlines for the submission of various types of information, certifications, or comments or actions by the Department discussed below refer to the number of calendar days from the applicable starting time.

Notice of No Sales

If a producer or exporter named in this notice of initiation had no exports, sales, or entries during the period of review (''POR''), it must notify the Department within 60 days of publication of this notice in the **Federal Register**. All submissions must be filed electronically at *http://iaaccess.trade.gov* in accordance with 19 CFR 351.303. *See Antidumping and Countervailing Duty Proceedings: Electronic Filing Procedures; Administrative Protective Order Procedures,* 76 FR 39263 (July 6, 2011). Such submissions are subject to verification in accordance with section 782(i) of the Tariff Act of 1930, as amended (''Act''). Further, in accordance with 19 CFR 351.303(f)(3)(ii), a copy of each request must be served on the petitioner and each exporter or producer specified in the request.

Respondent Selection

In the event the Department limits the number of respondents for individual examination for administrative reviews, the Department intends to select respondents based on U.S. Customs and Border Protection (''CBP'') data for U.S. imports during the POR. We intend to release the CBP data under Administrative Protective Order (''APO'') to all parties having an APO within seven days of publication of this initiation notice and to make our decision regarding respondent selection within 21 days of publication of this **Federal Register** notice. The Department invites comments regarding the CBP data and respondent selection within five days of placement of the CBP data on the record of the applicable review.

In the event the Department decides it is necessary to limit individual examination of respondents and conduct respondent selection under section 777A(c)(2) of the Act:

In general, the Department has found that determinations concerning whether particular companies should be ''collapsed'' (*i.e.,* treated as a single entity for purposes of calculating antidumping duty rates) require a substantial amount of detailed information and analysis, which often require follow-up questions and analysis. Accordingly, the Department will not conduct collapsing analyses at the respondent selection phase of this review and will not collapse companies at the respondent selection phase unless there has been a determination to collapse certain companies in a previous segment of this antidumping proceeding (*i.e.,* investigation, administrative review, new shipper review or changed circumstances review). For any company subject to this review, if the Department determined, or continued to treat, that company as collapsed with others, the Department will assume that such companies continue to operate in the same manner and will collapse them for respondent selection purposes. Otherwise, the Department will not collapse companies for purposes of respondent selection. Parties are requested to (a) identify which companies subject to review previously were collapsed, and (b) provide a citation to the proceeding in which they were collapsed. Further, if companies are requested to complete the Quantity and Value Questionnaire for purposes of respondent selection, in general each company must report volume and value data separately for itself. Parties should not include data for any other party, even if they believe they should be treated as a single entity with that other party. If a company was collapsed with another company or companies in the most recently completed segment of this proceeding where the Department considered collapsing that entity, complete quantity and value data for that collapsed entity must be submitted.

Deadline for Withdrawal of Request for Administrative Review

Pursuant to 19 CFR 351.213(d)(1), a party that has requested a review may withdraw that request within 90 days of the date of publication of the notice of initiation of the requested review. The regulation provides that the Department may extend this time if it is reasonable to do so. In order to provide parties additional certainty with respect to when the Department will exercise its discretion to extend this 90-day deadline, interested parties are advised that, with regard to reviews requested on the basis of anniversary months on or after August 2011, the Department does not intend to extend the 90-day deadline unless the requestor demonstrates that an extraordinary circumstance has prevented it from submitting a timely withdrawal request. Determinations by the Department to extend the 90-day deadline will be made on a case-by-case basis.

Separate Rates

In proceedings involving non-market economy (''NME'') countries, the Department begins with a rebuttable presumption that all companies within the country are subject to government control and, thus, should be assigned a single antidumping duty deposit rate. It is the Department's policy to assign all exporters of merchandise subject to an administrative review in an NME country this single rate unless an exporter can demonstrate that it is sufficiently independent so as to be entitled to a separate rate.

To establish whether a firm is sufficiently independent from government control of its export activities to be entitled to a separate rate, the Department analyzes each entity exporting the subject merchandise under a test arising from the *Final Determination of Sales at Less Than Fair Value: Sparklers from the People's Republic of China,* 56 FR 20588 (May 6, 1991), as amplified by *Final Determination of Sales at Less Than Fair Value: Silicon Carbide from the People's Republic of China,* 59 FR 22585 (May 2, 1994). In accordance with the separate rates criteria, the Department assigns separate rates to companies in NME cases only if respondents can demonstrate the absence of both *de jure* and *de facto* government control over export activities.

All firms listed below that wish to qualify for separate rate status in the administrative reviews involving NME countries must complete, as appropriate, either a separate rate application or certification, as described below. For these administrative reviews, in order to demonstrate separate rate eligibility, the Department requires entities for whom a review was requested, that were assigned a separate rate in the most recent segment of this proceeding in which they participated, to certify that they continue to meet the criteria for obtaining a separate rate. The Separate Rate Certification form will be available on the Department's Web site at *http://www.trade.gov/ia* on the date of publication of this **Federal Register** notice. In responding to the certification, please follow the ''Instructions for Filing the Certification'' in the Separate Rate Certification. Separate Rate Certifications are due to the Department no later than 60 calendar days after publication of this **Federal Register** notice. The deadline and requirement for submitting a Certification applies equally to NME-owned firms, wholly

foreign-owned firms, and foreign sellers who purchase and export subject merchandise to the United States.

Entities that currently do not have a separate rate from a completed segment of the proceeding [1] should timely file a Separate Rate Application to demonstrate eligibility for a separate rate in this proceeding. In addition, companies that received a separate rate in a completed segment of the proceeding that have subsequently made changes, including, but not limited to, changes to corporate structure, acquisitions of new companies or facilities, or changes to their official company name,[2] should timely file a Separate Rate Application to demonstrate eligibility for a separate rate in this proceeding. The Separate Rate Status Application will be available on the Department's Web site at *http://www.trade.gov/ia* on the date of publication of this **Federal Register** notice. In responding to the Separate Rate Status Application, refer to the instructions contained in the application. Separate Rate Status Applications are due to the Department no later than 60 calendar days of publication of this **Federal Register** notice. The deadline and requirement for submitting a Separate Rate Status Application applies equally to NME-owned firms, wholly foreign-owned firms, and foreign sellers that purchase and export subject merchandise to the United States.

For exporters and producers who submit a separate-rate status application or certification and subsequently are selected as mandatory respondents, these exporters and producers will no longer be eligible for separate rate status unless they respond to all parts of the questionnaire as mandatory respondents.

Initiation of Reviews

In accordance with 19 CFR 351.221(c)(1)(i), we are initiating administrative reviews of the following antidumping and countervailing duty orders and findings. We intend to issue the final results of these reviews not later than February 28, 2013. Also, in accordance with 19 CFR 351.213(c) we are deferring for one year the initiation of the February 1, 2011 through January 31, 2012 administrative review of the antidumping duty order on Stainless Steel Bar from Japan (A–588–833) with respect to one exporter.

	Period to be reviewed
Antidumping Duty Proceedings	
BRAZIL:	
Frozen Warmwater Shrimp,[3] A–351–838	2/1/11–1/31/12
Stainless Steel Bar, A–351–825	2/1/11–1/31/12
Villares Metals S.A.	
INDIA:	
Certain Preserved Mushrooms, A–533–813	2/1/11–1/31/12
Agro Dutch Foods Limited (Agro Dutch Industries Limited)	
Himalya International Ltd.	
Hindustan Lever Ltd. (formerly Ponds India, Ltd.)	
Transchem, Ltd.	
Weikfield Foods Pvt. Ltd.	
Frozen Warmwater Shrimp,[4] A–533–840	2/1/11–1/31/12
Stainless Steel Bar, A–533–810	2/1/11–1/31/12
Ambica Steels Limited Mukand Ltd.	
JAPAN: Stainless Steel Bar,[5] A–588–833	2/1/10–1/31/11
Misumi Corporation	
REPUBLIC OF KOREA: Certain Cut-to-Length Carbon-Quality Steel Plate, A–580–836	2/1/11–1/31/12
Daewood International Corp.	
Dongbu Steel Co., Ltd.	
Dongkuk Steel Mill Co., Ltd.	
GS Global Corp.	
Hyundai Steel Co.	
Samsung C&T Corp.	
TCC Steel Corp.	
THAILAND: Frozen Warmwater Shrimp,[6] A–549–822	2/1/11–1/31/12
THE PEOPLE'S REPUBLIC OF CHINA:	
Certain Preserved Mushrooms,[7] A–570–851	2/1/11–1/31/12
Ayecue (Liaocheng) Foodstuff Co., Ltd.	
Blue Field (Sichuan) Food Industrial Co., Ltd.	
China National Cereals, Oils & Foodstuffs Import & Export Corp.	
China Processed Food Import & Export Co.	
Dujiangyan Xingda Foodstuff Co., Ltd.	
Fujian Golden Banyan Foodstuffs Industrial Co., Ltd.	
Fujian Pinghe Baofeng Canned Foods	
Fujian Yuxing Fruits and Vegetables Foodstuffs Development Co., Ltd.	
Fujian Zishan Group Co., Ltd.	
Guangxi Eastwing Trading Co., Ltd.	
Guangxi Hengyong Industrial & Commercial Dev. Ltd.	
Guangxi Jisheng Foods, Inc.	
Inter-Foods (Dongshan) Co., Ltd.	
Linyi City Kangfa Foodstuff Drinkable Co., Ltd.	
Longhai Guangfa Food Co., Ltd.	

[1] Such entities include entities that have not participated in the proceeding, entities that were preliminarily granted a separate rate in any currently incomplete segment of the proceeding (*e.g.,* an ongoing administrative review, new shipper review, *etc.*) and entities that lost their separate rate in the most recently complete segment of the proceeding in which they participated.

[2] Only changes to the official company name, rather than trade names, need to be addressed via a Separate Rate Application. Information regarding new trade names may be submitted via a Separate Rate Certification.

	Period to be reviewed
Primera Harvest (Xiangfan) Co., Ltd.	
Shandong Fengyu Edible Fungus Corporation Ltd.	
Shandong Jiufa Edible Fungus Corporation, Ltd.	
Sun Wave Trading Co., Ltd.	
Xiamen Greenland Import & Export Co., Ltd.	
Xiamen Gulong Import & Export Co., Ltd.	
Xiamen International Trade & Industrial Co., Ltd.	
Xiamen Jiahua Import & Export Trading Co., Ltd.	
Xiamen Longhuai Import & Export Co., Ltd.	
Zhangzhou Gangchang Canned Foods Co., Ltd.	
Zhangzhou Golden Banyan Foodstuffs Industrial Co., Ltd.	
Zhangzhou Hongda Import & Export Trading Co., Ltd.	
Zhangzhou Long Mountain Food Co., Ltd.	
Zhangzhou Tongfa Foods Industry Co., Ltd.	
Zhejiang Iceman Food Co., Ltd.	
Zhejiang Iceman Group Co., Ltd.	
Certain Frozen Warmwater Shrimp,[8] A–570–893	2/1/11–1/31/12
Allied Pacific Aquatic Products Zhanjiang Co Ltd	
Allied Pacific Food (Dalian) Co., Ltd	
Aqua Foods (Qingdao) Co., Ltd.	
Asian Seafoods (Zhanjiang) Co., Ltd.	
Beihai Evergreen Aquatic Product Science And Technology Co Ltd.	
Dalian Hualian Foods Co., Ltd.	
Dalian Shanhai Seafood Co., Ltd.	
Dalian Taiyang Aquatic Products Co., Ltd.	
Dalian Z&H Seafood Co., Ltd.	
Fujian Chaohui International Trading	
Fujian Dongshan County Shunfa Aquatic Product Co., Ltd.	
Fujian Rongjiang Import and Export Corp.	
Fuqing Minhua Trade Co., Ltd.	
Fuqing Yihua Aquatic Food Co., Ltd.	
Fuqing Yiyuan Trading Co., Ltd.	
Guangdong Jiahuang Foods Co., Ltd.	
Guangdong Jinhang Foods Co., Ltd.	
Guangdong Shunxin Sea Fishery Co. Ltd.	
Guangdong Wanya Foods Fty. Co., Ltd.	
Hai Li Aquatic Co., Ltd.	
Hainan Brich Aquatic Products Co., Ltd.	
Hainan Hailisheng Food Co., Ltd.	
Hainan Xiangtai Fishery Co., Ltd.	
Haizhou Aquatic Products Co., Ltd.	
Hilltop International	
Hua Yang (Dalian) International Transportation Service Co.	
Kingston Foods Corporation	
Maoming Xinzhou Seafood Co., Ltd.	
Ocean Duke Corporation	
Olanya (Germany) Ltd.	
Qingdao Yuanqiang Foods Co., Ltd.	
Rizhao Smart Foods	
Rizhao Xinghe Foodstuff Co., Ltd.	
Rui'an Huasheng Aquatic Products Processing Factory	
Savvy Seafood Inc.	
Sea Trade International Inc.	
Shandong Meijia Group Co., Ltd.	
Shanghai Linghai Fisheries Trading Co. Ltd.	
Shanghai Lingpu Aquatic Products Co.	
Shanghai Smiling Food Co., Ltd.	
Shanghai Zhoulian Foods Co., Ltd.	
Shantou Jiazhou Foods Industry	
Shantou Jin Cheng Food Co., Ltd.	
Shantou Longsheng Aquatic Product Foodstuff Co., Ltd.	
Shantou Ruiyuan Industry Company Ltd.	
Shantou Wanya Foods Fty. Co., Ltd.	
Shantou Yuexing Enterprise Co.	
Shenzen Allied Aquatic Produce Development Ltd.	
Shenzhen Yudayuan Trade Ltd.	
Thai Royal Frozen Food Zhanjiang Co., Ltd.	
Xiamen Granda Import & Export Co., Ltd.	
Yancheng Hi-king Agriculture Developing Co., Ltd.	
Yanfeng Aquatic Product Foodstuff	
Yangjiang Anyang Food Co., Ltd.	
Yangjiang City Yelin Hoi Tat Quick Frozen Seafood Co., Ltd.	
Yangjiang Wanshida Seafood Co., Ltd.	

	Period to be reviewed
Yelin Enterprise Co., Ltd.	
Zhangzhou Xinwanya Aquatic Product	
Zhangzhou Yanfeng Aquatic Product	
Zhanjiang Evergreen Aquatic Product Science and Technology Co., Ltd.	
Zhanjiang Fuchang Aquatic Products Co., Ltd.	
Zhanjiang Go Harvest Aquatic Products Co., Ltd.	
Zhanjiang Haizhou Aquatic Product Co. Ltd.	
Zhanjiang Hengrun Aquatic Co, Ltd.	
Zhanjiang Jinguo Marine Foods Co., Ltd.	
Zhanjiang Join Wealth Aquatic Products Co., Ltd.	
Zhanjiang Longwei Aquatic Products Industry Co., Ltd.	
Zhanjiang Newpro Foods Co., Ltd.	
Zhanjiang Rainbow Aquatic Development	
Zhanjiang Regal Integrated Marine Resources Co., Ltd.	
Zhanjiang Universal Seafood Corp.	
Zhejiang Daishan Baofa Aquatic Products Co., Ltd.	
Zhejiang Xinwang Foodstuffs Ltd.	
Zhejiang Zhoufu Food Co., Ltd.	
Zhoushan Corporation	
Zhoushan Haiwang Seafood Co., Ltd.	
Small Diameter Graphite Electrodes,[9] A–570–929	2/1/11–1/31/12
5-Continent Imp. & Exp. Co., Ltd.	
Acclcarbon Co., Ltd.	
Allied Carbon (China) Co., Limited	
Anssen Metallurgy Group Co., Ltd.	
AMGL	
Apex Maritime (Dalian) Co., Ltd.	
Asahi Fine Carbon (Dalian) Co., Ltd.	
Beijing Fangda Carbon Tech Co., Ltd.	
Beijing Xinchengze Inc.	
Beijing Xincheng Sci-Tech. Development Inc.	
Brilliant Charter Limited	
Chang Cheng Chang Electrode Co., Ltd.	
Chengdelh Carbonaceous Elements Factory	
Chengdu Jia Tang Corp.	
Chengdu Rongguang Carbon Co., Ltd.	
China Industrial Mineral & Metals Group	
China Shaanxi Richbond Imp. & Exp. Industrial Corp. Ltd.	
China Xingyong Carbon Co., Ltd.	
CIMM Group Co., Ltd.	
Dalian Carbon & Graphite Corporation	
Dalian Hongrui Carbon Co., Ltd.	
Dalian Honest International Trade Co., Ltd.	
Dalian Horton International Trading Co., Ltd.	
Dalian LST Metallurgy Co., Ltd.	
Dalian Shuangji Co., Ltd.	
Dalian Thrive Metallurgy Imp. & Exp. Co., Ltd.	
Datong Carbon	
Datong Carbon Plant	
Datong Xincheng Carbon Co., Ltd.	
Dechang Shida Carbon Co., Ltd.	
De Well Container Shipping Corp.	
Dewell Group	
Dignity Success Investment Trading Co., Ltd.	
Double Dragon Metals and Mineral Tools Co., Ltd.	
Fangda Carbon New Material Co., Ltd	
Fangda Lanzhou Carbon Joint Stock Company Co. Ltd.	
Foset Co., Ltd.	
Fushun Carbon Co., Ltd.	
Fushun Jinly Petrochemical Carbon Co., Ltd.	
Fushun Orient Carbon Co., Ltd.	
GES (China) Co., Ltd.	
Guangdong Highsun Yongye (Group) Co., Ltd.	
Guanghan Shida Carbon Co., Ltd.	
Haimen Shuguang Carbon Industry Co., Ltd.	
Handan Hanbo Material Co., Ltd.	
Hebei Long Great Wall Electrode Co., Ltd.	
Hefei Carbon Co., Ltd.	
Heilongjiang Xinyuan Carbon Products Co., Ltd.	
Heilongjiang Xinyuan Metacarbon Company, Ltd.	
Henan Sanli Carbon Products Co., Ltd.	
Hopes (Beijing) International Co., Ltd.	
Hunan Mec Machinery and Electronics Imp. & Exp. Corp.	

	Period to be reviewed
Hunan Yinguang Carbon Factory Co., Ltd.	
Inner Mongolia QingShan Special Graphite and Carbon Co., Ltd.	
Inner Mongolia Xinghe County Hongyuan Electrical Carbon Factory	
Jiang Long Carbon	
Jiangsu Yafei Carbon Co., Ltd.	
Jiaozuo Zhongzhou Carbon Products Co., Ltd.	
Jichun International Trade Co., Ltd. of Jilin Province	
Jiexiu Juyuan Carbon Co., Ltd.	
Jiexiu Ju-Yuan & Coaly Co., Ltd.	
Jilin Carbon Graphite Material Co., Ltd.	
Jilin Carbon Import and Export Company	
Jilin Songjiang Carbon Co Ltd.	
Jinneng Group Co., Ltd.	
Jinyu Thermo-Electric Material Co., Ltd.	
Kaifeng Carbon Company Ltd.	
KASY Logistics (Tianjin) Co., Ltd.	
Kimwan New Carbon Technology and Development Co., Ltd.	
Kingstone Industrial Group Ltd.	
L & T Group Co., Ltd.	
Laishui Long Great Wall Electrode Co. Ltd.	
Lanzhou Carbon Co., Ltd.	
Lanzhou Carbon Import & Export Corp.	
Lanzhou Hailong Technology	
Lanzhou Ruixin Industrial Material Co., Ltd.	
LH Carbon Factory of Chengde	
Lianxing Carbon Qinghai Co., Ltd.	
Lianxing Carbon Science Institute	
Lianxing Carbon (Shandong) Co., Ltd.	
Lianyungang Jinli Carbon Co., Ltd.	
Liaoyang Carbon Co. Ltd.	
Linghai Hongfeng Carbon Products Co., Ltd.	
Linyi County Lubei Carbon Co., Ltd.	
Maoming Yongye (Group) Co., Ltd.	
MBI Beijing International Trade Co., Ltd.	
Nantong Dongjin New Energy Co., Ltd.	
Nantong Falter New Energy Co., Ltd.	
Nantong River-East Carbon Co., Ltd.	
Nantong River-East Carbon Joint Stock Co., Ltd.	
Nantong Yangtze Carbon Corp. Ltd.	
Orient (Dalian) Carbon Resources Developing Co., Ltd.	
Orient Star Transport International, Ltd.	
Peixian Longxiang Foreign Trade Co. Ltd.	
Qingdao Grand Graphite Products Co., Ltd.	
Qingdao Haosheng Metals Imp. & Exp. Co., Ltd.	
Quingdao Haosheng Metals & Minerals Imp. & Exp. Co., Ltd.	
Qingdao Liyikun Carbon Development Co., Ltd.	
Qingdao Likun Graphite Co., Ltd.	
Qingdao Ruizhen Carbon Co., Ltd.	
Ray Group Ltd.	
Rex International Forwarding Co., Ltd.	
Rt Carbon Co., Ltd.	
Ruitong Carbon Co., Ltd.	
Shandong Basan Carbon Plant	
Shandong Zibo Continent Carbon Factory	
Shanghai Carbon International Trade Co., Ltd.	
Shanghai GC Co., Ltd.	
Shanghai Jinneng International Trade Co., Ltd.	
Shanghai P.W. International Ltd.	
Shanghai Shen-Tech Graphite Material Co., Ltd.	
Shanghai Topstate International Trading Co., Ltd.	
Shanxi Datong Energy Development Co., Ltd.	
Shanxi Foset Carbon Co. Ltd.	
Shanxi Jiexiu Import and Export Co., Ltd.	
Shanxi Jinneng Group Co., Ltd.	
Shanxi Yunheng Graphite Electrode Co., Ltd.	
Shenyang Jinli Metals & Minerals Imp. & Exp. Co., Ltd.	
Shida Carbon Group	
Shijaizhuang Carbon Co., Ltd.	
Shijiazhuang Huanan Carbon Factory	
Sichuan 5-Continent Imp. & Exp. Co., Ltd.	
Sichuan Shida Trading Co., Ltd.	
Sichuan GMT International Inc.	
Sichuan Guanghan Shida Carbon Co., Ltd.	

	Period to be reviewed
Sinicway International Logistics Ltd.	
Sinosteel Anhui Co., Ltd.	
Sinosteel Jilin Carbon Co., Ltd.	
Sinosteel Jilin Carbon Imp. & Exp. Co., Ltd.	
Sinosteel Sichuan Co., Ltd.	
SMMC Group Co., Ltd.	
Sure Mega (Hong Kong) Ltd.	
Tangshan Kimwan Special Carbon & Graphite Co., Ltd.	
Tengchong Carbon Co., Ltd.	
Tianjin (Teda) Iron & Steel Trade Co., Ltd.	
Tianjin Kimwan Carbon Technology and Development Co., Ltd.	
Tianjin Yue Yang Industrial & Trading Co., Ltd.	
Tianzhen Jintian Graphite Electrodes Co., Ltd.	
Tielong (Chengdu) Carbon Co., Ltd.	
UK Carbon & Graphite	
United Carbon Ltd.	
United Trade Resources, Inc.	
Weifang Lianxing Carbon Co., Ltd.	
World Trade Metals & Minerals Co., Ltd.	
XC Carbon Group	
Xinghe County Muzi Carbon Co., Ltd.	
Xinghe Xinyuan Carbon Products Co., Ltd.	
Xinyuan Carbon Co., Ltd.	
Xuanhua Hongli Refractory and Mineral Company	
Xuchang Minmetals & Industry Co., Ltd.	
Xuzhou Carbon Co., Ltd.	
Xuzhou Electrode Factory	
Xuzhou Jianglong Carbon Manufacture Co., Ltd.	
Yangzhou Qionghua Carbon Trading Ltd.	
Yixing Huaxin Imp & Exp Co. Ltd.	
Youth Industry Co., Ltd.	
Zhengzhou Jinyu Thermo-Electric Material Co., Ltd.	
Zibo Continent Carbon Factory	
Zibo DuoCheng Trading Co., Ltd.	
Zibo Lianxing Carbon Co., Ltd.	
Zibo Wuzhou Tanshun Carbon Co., Ltd.	
Uncovered Innerspring Units,[10] A–570–928	2/1/11–1/31/12
Tai Wa Hong	
SOCIALIST REPUBLIC OF VIETNAM: Frozen Warmwater Shrimp,[11] A–552–802	2/1/11–1/31/12
Bac Lieu Fisheries Company Limited, aka	
Bac Lieu Fisheries Company Limited (“Bac Lieu”) aka	
Bac Lieu Fisheries Joint Stock Company aka	
Bac Lieu Fisheries Limited Company aka	
Bac Lieu Fisheries Company Limited	
Bentre Aquaproduct Import & Export Joint Stock Company	
Bien Dong Seafood Co., Ltd.	
Binh An Seafood Joint Stock Company	
C.P. Vietnam Livestock Company Limited (“C.P. Vietnam”) aka	
C.P. Vietnam Livestock Company Limited aka	
C.P. Vietnam Livestock Corporation (“C.P. Vietnam”)	
C.P. Vietnam Livestock Corporation	
C.P. Vietnam Livestock Co., Ltd.	
Minh Hai Sea Products Import Export Company (“Seaprimex Co”), aka	
Ca Mau Seafood Joint Stock Company (“SEAPRIMEXCO”) aka	
Seaprimexco Vietnam, aka	
Seaprimexco.	
Ca Mau Seafood Joint Stock Company (“Seaprimexco”)	
Minh Hai Seaproducts Import Export Corporation	
Seaprimexco.	
Minh Hai Seaproducts Co Ltd. (Seaprimexco)	
Ca Mau Frozen Seafood Processing Import-Export Corporation (“CAMIMEX”)	
Cadovimex Seafood Import-Export and Processing Joint Stock Company (“CADOVIMEX–VIETNAM”) aka	
Cai Doi Vam Seafood Import-Export Company (“Cadovimex”) aka	
Cai Doi Vam Seafood aka	
Cai Doi Vam Seafood Im-Ex Company (Cadovimex) aka	
Cai Doi Vam Seafood Processing Factory aka	
Caidoivam Seafood Company (Cadovimex) aka	
Caidoivam Seafood Im-Ex Co.	
Cafatex Fishery Joint Stock Corporation (“Cafatex Corp.”) aka	
Cantho Animal Fisheries Product Processing Export Enterprise (Cafatex), aka	
Cafatex, aka	
Cafatex Vietnam, aka	
Xi Nghiep Che Bien Thuy Suc San Xuat Kau Cantho, aka	

	Period to be reviewed
Cas, aka	
Cas Branch, aka	
Cafatex Saigon, aka	
Cafatex Fishery Joint Stock Corporation, aka	
Cafatex Corporation, aka	
Taydo Seafood Enterprise.	
Cafatex Corp	
Cafatex Fishery Joint Stock Corporation (''Cafatex Corp.'') and/or Cafatex Fishery Joint Stock Corporation (''CAFATEX CORP.'')	
Cadovimex Seafood Import-Export and Processing Joint Stock Company (''CADOVIMEX–VIETNAM'') aka	
Cai Doi Vam Seafood Import-Export Company (''Cadovimex'') aka	
Cadovimex Seafood Import-Export and Processing Joint Stock Company (''CADOVIMEX'') and/or Cadovimex Seafood Import-Export and Processing Joint-Stock Company (''Cadovimex-Vietnam'')	
Cadovimex II Seafood Import and Export and/or Cadovimex II Seafood Joint Processing Stock Company	
Can Tho Agricultural and Animal Products Import Export Company (''CATACO'') aka	
Can Tho Agricultural Products aka	
CATACO aka	
Can Tho Agricultural and Animal Products Imex Company	
Can Tho Agricultural and Animal Product Import Export Company (''CATACO'') and/or Can Tho Agricultural and Animal Products Import Export Company (''CATACO'')	
Cantho Agricultural & Animal Product Import Export Company (''CATACO'') and/or Can Tho Agricultural and Animal Products Import Export Company (''CATACO'')	
Cantho Imp. Exp. Fishery Ltd.	
Cam Ranh Seafoods Processing Enterprise Company (''Camranh Seafoods'') aka	
Camranh Seafoods	
Cam Ranh Seafoods Processing Enterprise Company (''Camranh Seafoods'') and/or Cam Ranh Seafoods Processing Enterprise PTE and/or Camramh Seafoods	
Camranh Seafoods Processing Enterprise Pte. Aka	
Cam Ranh Seafoods Processing Enterprise Processing Pte. aka	
Cam Ranh Seafoods aka	
Camranh Seafoods Processing & Exporting Company Limited and its branch factory, Branch of Camranh Seafoods Processing Enterprise Pte.	
Quang Ninh Export Aquatic Products Processing Factory aka	
Quang Ninh Seaproducts Factory	
Can Tho Agricultural Products	
Camau Frozen Seafood Processing Import Export Corporation (''CAMIMEX'') aka	
Camimex aka	
Camau Seafood Factory No. 4 aka	
Camau Seafood Factory No. 5 aka	
Camau Frozen Seafood Processing Import & Export aka	
Camau Frozen Seafood Processing Import Export Corp. (CAMIMEX–FAC 25) aka	
Frozen Factory No. 4	
Camau Frozen Seafood Processing Import Export Corporation, or Camau Seafood Factory No. 4 (''CAMIMEX'') and/or Camau Frozen Seafood Processing Import Export Corporation (''CAMIMEX'')	
Camau Frozen Seafood Processing Import & Export Co.	
Camimex Factory 25	
Coastal Fishery Development aka	
Coastal Fisheries Development Corporation (''Cofidec'') aka	
COFIDEC aka	
Coastal Fisheries Development Corporation aka	
Coastal Fisheries Development Co., aka	
Coastal Fisheries Development Corp.	
Coastal Fisheries Development Corporation (Cofidec) and/or Coastal Fisheries Development Corporation (''COFIDEC'')	
Coastal Fisheries Development Corporation (Cofidec)	
Cuulong Seaproducts Company (''Cuu Long Seapro'') aka	
Cuu Long Seaproducts Limited (''Cuulong Seapro'') aka	
Cuulong Seapro aka	
Cuulong Seaproducts Company (''Cuulong Seapro'') aka	
Cuu Long Seaproducts Company (''Cuu Long Seapro'') aka	
Cuu Long Seaproducts Company aka	
Cuu Long Seapro aka	
Cuulong Seaproducts Company (''Cuu Long Seapro'') aka	
Cuu Long Seaproducts Limited (Cuulong Seapro) aka	
Cuulong Seapro aka	
Cuulong Seaproduct Company	
Cuulong Seaproducts Company (''Cuu Long Seapro'') and/or Cuulong Seaproducts Company (''Cuulong Seapro'') and/or Cuulong Seaprodex Co.	
Can Tho Import Export Fishery Limited Company (''CAFISH'')	
Danang Seaproducts Import Export Corporation (''Seaprodex Danang'') aka	
Danang Seaproducts Import Export Corporation aka	
Danang Seaproduct Import-Export Corporation aka	
Danang Seaproducts Import Export aka	
Tho Quang Seafood Processing & Export Company aka	

	Period to be reviewed
Seaprodex Danang aka	
Tho Quang Seafood Processing and Export Company aka	
Tho Quang, aka	
Tho Quang Co	
Danang Seaproducts Import Export Corporation (''Seaprodex Danang'') and/or Danang Seaproducts Import Export Corporation (and its affiliates) (''Seaprodex Danang'')	
Grobest & I-Mei Industrial Vietnam, aka	
Grobest, aka	
Grobest & I-Mei Industrial (Vietnam) Co., Ltd.	
Grobest & I-Mei Industry Vietnam	
Gallant Ocean (Vietnam) Co., Ltd. (''Gallant Ocean Vietnam'')	
Gallant Ocean (Vietnam) Co. Ltd.	
Gallant Ocean (Quang Ngai), Ltd.	
Investment Commerce Fisheries Corporation (''Incomfish'') aka	
Incomfish aka	
Investment Commerce Fisheries Corp., aka	
Incomfish Corp., aka	
Incomfish Corporation aka	
Investment Commerce Fisheries aka	
Investment Commerce Fisheries Corporation	
Investment Commerce Fisheries Corporation (''Incomfish'') and/or Investment Commerce Fisheries Corporation (''INCOMFISH'')	
Kim Anh Company Limited (''Kim Anh'')	
Kim Anh Co., Ltd.	
Luan Vo Fishery Co., Ltd.	
Lucky Shing Co., Ltd..	
Minh Phat Seafood Co., Ltd aka	
Minh Phat Seafood aka	
Minh Phu Seafood Export Import Corporation (and affiliates Minh Qui Seafood Co. Ltd. and Minh Phat Seafood Co., Ltd.) aka	
Minh Phu Seafood Corp. aka	
Minh Phu Seafood Corporation aka	
Minh Qui Seafood aka	
Minh Qui Seafood Co., Ltd.	
Minh Phat Seafood and/or Minh Phat Seafood Co., Ltd.	
Minh Phu Seafood Export Import Corporation (and affiliates Minh Qui Seafood Co., Ltd. and Minh Phat Seafood Co., Ltd.) and/or Minh Phu Seafood Export Import Corporation (and affiliates Minh Qui Seafood Co., Ltd. and Minh Phat Seafood Co., Ltd.) (collectively ''Minh Phu Group'')	
Minh Phu Seafood Pte	
Mp Consol Co., Ltd.	
Minh Hai Jostoco aka	
Minh Hai Export Frozen Seafood Processing Joint-Stock Company (''Minh Hai Jostoco'') aka	
Minh Hai Export Frozen Seafood Processing Joint-Stock Company aka	
Minh Hai Joint Stock Seafood Processing Joint-Stock Company aka	
Minh Hai Export Frozen Seafood Processing Joint-Stock Co., aka	
Minh-Hai Export Frozen Seafood Processing Joint-Stock Company	
Minh Hai Export Frozen Seafood Processing Joint-Stock Company (''Minh Hai Jostoco'') and/or Minh Hai Export Frozen Seafood Processing Joint-Stock Company (''Minh Hai Jotosco'')	
Minh Hai Joint-Stock Seafoods Processing Company (''Seaprodex Minh Hai'') aka	
Sea Minh Hai aka	
Minh Hai Joint-Stock Seafoods Processing Company aka	
Seaprodex Minh Hai aka	
Seaprodex Min Hai aka	
Seaprodex Minh Hai (Minh Hai Joint Stock Seafoods Processing Co.) aka	
Seaprodex Minh Hai Factory aka	
Seaprodex Minh Hai Factory No. 69 aka	
Seaprodex Minh Hai Workshop 1 aka	
Seaprodex Minh Hai-Factory No. 78 aka	
Minh Hai Joint-Stock Seafoods Processing Company (''Seaprodex Minh Hai'') and/or Minh Hai Joint-Stock Seafoods Processing Company (''Sea Minh Hai'')	
Minh Hai Sea Products Import Export Company (''Seaprimex Co''), aka	
Ca Mau Seafood Joint Stock Company (''SEAPRIMEXCO'') aka	
Seaprimexco Vietnam, aka	
Seaprimexco.	
Ca Mau Seafood Joint Stock Company (''Seaprimexco'')	
Minh Hai Seaproducts Import Export Corporation	
Seaprimexco.	
Minh Hai Seaproducts Co Ltd. (Seaprimexco)	
Nha Trang Seaproduct Company (''Nha Trang Seafoods'') aka	
NT Seafoods Corporation	
Nhatrang Seafoods-F.89 Joint Stock Company.	
NTSF Seafoods Joint Stock Company	
(Collectively ''Nha Trang Seafood Group'')	

	Period to be reviewed
Nha Trang Seafoods aka	
Nha Trang Seaproducts Company Nha Trang Seafoods	
Nha Trang Seaproduct Company (“Nha Trang Seafoods”) and/or Nha Trang Seaproduct Company (“NHA TRANG SEA-FOODS”)	
Nhat Duc Co., Ltd.	
Nha Trang Fisheries Joint Stock Company (“Nha Trang Fisco”) aka	
Nha Trang Fisheries Joint Stock Company aka	
Nhatrang Fisheries Joint Stock Company aka	
Nha Trang Fisco aka	
Nhatrang Fisco aka	
Nha Trang Fisheries Joint Stock Company (“Nha Trang Fisco”) aka	
Nha Trang Fisheries, Joint Stock	
Nha Trang Fisheries Joint Stock Company (“Nha Trang Fisco”) and/or Nha Trang Fisheries Joint Stock Company (“Nha Trang FISCO”)	
Nhat Du Co., Ltd.	
Ngoc Sinh Private Enterprise aka	
Ngoc Sinh Seafoods aka	
Ngoc Sinh Seafoods Processing and Trading Enterprise aka	
Ngoc Sinh Fisheries aka	
Ngoc Sinh Private Enterprises aka	
Ngoc Sinh Seafoods Processing and Trading Enterprises aka	
Ngoc Sinh aka	
Ngoc Sinh Seafood Processing Company aka	
Ngoc Sinh Seafoods (Private Enterprise)	
Ngoc Sinh Seafood Trading & Processing Enterprise	
Ngoc Sinh Seafood Trading & Processing	
Phu Cuong Seafood Processing and Import-Export Co., Ltd.	
Phu Cuong Jostoco Seafood Corporation, aka Phu Cuoung Seafood Processing & Import-Export Co., Ltd.	
Phuong Nam Co., Ltd. (“Phuong Nam”) aka	
Western Seafood Processing and Exporting Factory (“Western Seafood”)	
Phuong Nam Co. Ltd. and/or Phuong Nam Foodstuff Corp.	
Phu Cuong Seafood Processing And Import Export Company Limited	
Sao Ta Foods Joint Stock Company (“Fimex VN”) aka	
Sao Ta Foods Joint Stock Company aka	
Fimex VN aka	
Sao Ta Seafood Factory aka	
Saota Seafood Factory	
Sao Ta Foods Joint Stock Company (“Fimex VN”) and/or Sao Ta Foods Joint Stock Company (“FIMEX”)	
Soc Trang Aquatic Products and General Import Export Company (“Stapimex”) aka	
Soc Trang Seafood Joint Stock Company (“Stapimex”) aka	
Soc Trang Aquatic Products and General Import Export Company aka Stapimex aka	
Soc Trang Aquatic Products and General Import Export Company-(Stapimex) aka	
Stapimex Soc Trans Aquatic Products and General Import Export Company aka Stapmex	
Soc Trang Aquatic Products and General Import Export Company (“Stapimex”) and/or Soc Trang Aquatic Products and General Import-Export Company (“STAPIMEX”) and/or Soc Trang Aquatic Seafood Joint-Stock Company	
Trang Corporation	
Thuan Phuoc Seafoods and Trading Corporation aka	
Frozen Seafoods Factory No. 32 aka	
Seafoods and Foodstuff Factory aka	
My Son Seafoods Factory	
Frozen Seafoods Factory No. 32 and/or Frozen Seafoods Fty No. 32	
Gn Foods	
UTXI Aquatic Products Processing Company aka	
UT XI Aquatic Products Processing Company aka	
UT–XI Aquatic Products Processing Company aka	
UTXI aka	
UTXI Co. Ltd., aka	
Khanh Loi Seafood Factory aka	
Hoang Phuong Seafood Factory aka	
UTXI Aquatic Products Processing Corporation (“UTXICO”)	
Viet Hai Seafood Co., Ltd. aka	
Vietnam Fish One Co., Ltd. (“Fish One”)	
Vietnam Fish One Co., Ltd.	
Viet Foods Co., Ltd. aka	
Nam Hai Foodstuff and Export Company Ltd	
Vinh Loi Import Export Company (“Vimexco”), aka	
Vinh Loi Import Export Company (“VIMEX”), aka	
VIMEXCO aka	
VIMEX aka	
Vinh Loi Import/Export Co., aka	
Vinhloi Import Export Company aka	
Vinh Loi Import-Export Company	
Vinh Loi Import Export Company (“Vimexco”) and/or Vinh Loi Import Export Company (“VIMEX”)	

	Period to be reviewed
Amanda Foods (Vietnam) Ltd.	
Amanda Seafood Co., Ltd.	
Agrex Saigon	
Anvifish Joint Stock Co.	
BIM Seafood Joint Stock Company	
Can Tho Import Export Seafood Joint Stock Company (CASEAMEX)	
Can Tho Imp. Exp. Fishery Ltd.	
Cau Tre Enterprise (C.T.E.)	
CL Fish Co., Ltd. (Cuu Long Fish Company)	
Cautre Export Goods Processing Joint Stock Company	
Cong Ty Tnhh Thong Thuan (Thong Thuan)	
D & N Foods Processing (Danang Company Ltd.)	
Duy Dai Corporation	
Hai Thanh Food Company Ltd.	
Hai Viet Corporation (“HAVICO”)	
Hai Vuong Co., Ltd.	
Hoang Hai Company Ltd.	
Hua Heong Food Industries Vietnam Co. Ltd.	
Hoa Phat Aquatic Products Processing And Trading Service Co., Ltd.	
Interfood Shareholding Co.	
Kien Long Seafoods Co. Ltd.	
Minh Chau Imp. Exp. Seafood Processing Co., Ltd.	
Ngoc Chau Co., Ltd. and/or Ngoc Chau Seafood Processing Company	
Ngoc Tri Seafood Joint Stock Company	
Ngoc Tri Seafood Company.	
Quoc Viet Seaproducts Processing Trading Import and Export Co., Ltd.	
Quoc Viet Seaproducts Processing Trading and Import-Export Co., Ltd.	
S.R.V. Freight Services Co., Ltd.	
Sea Product	
Seavina Joint Stock Company (“Seavina”)	
Sustainable Seafood	
Tan Thanh Loi Frozen Food Co., Ltd.	
Thanh Doan Seaproducts Import & Export Processing Joint-Stock Company (THADIMEXCO)	
Thanh Hung Frozen Seafood Processing Import Export Co., Ltd.	
Thanh Tri Seafood Processing Co. Ltd.	
Tho Quang Seafood Processing and Export Company	
Thuan Phuoc Seafoods and Trading Corporation and/or Thuan Phuoc Seafoods and Trading Corporation (and its affiliates)	
Thuan Phuoc Seafoods & Trading Corporation and/or Thuan Phuoc Seafoods and Trading Corporation (and its affiliates)	
Tien Tien Garment Joint Stock Company	
Tithi Co., Ltd.	
Viet Cuong Seafood Processing Import Export Joint-Stock Company	
Viet Cuong Seafood Processing Import Export	
Viet I-Mei Frozen Foods Co., Ltd.	
Vietnam Clean Seafood Corporation (VINA Cleanfood)	
Vietnam Northern Viking Technologies Co. Ltd.	
Vinatex Danang	
Vinh Hoan Corp.	
Countervailing Duty Proceedings	
None.	
Suspension Agreements	
None.	
Deferral of Initiation of Administrative Review	
JAPAN: Stainless Steel Bar,[12] A–588–833	2/1/11–1/31/12
Misumi Corporation	

[3] The initiation of the administrative review for the above referenced case will be published in a separate initiation notice.

[4] The initiation of the administrative review for the above referenced case will be published in a separate initiation notice.

[5] Pursuant to 19 CFR 351.213 (c) the Department received a request to defer the administrative review covering the period 02/01/2010—01/31/2011 with respect to Misumi Corporation for one year. We stated in the initiation notice that we will initiate the administrative review with respect to Misumi Corporation in the month immediately following the next anniversary month. *See Initiation of Antidumping Duty Administrative Reviews, Requests for Revocation in Part, and Deferral of Administrative Review,* 76 FR 17825 (March 31, 2011).

[6] The initiation of the administrative review for the above referenced case will be published in a separate initiation notice.

[7] If one of the above-named companies do not qualify for a separate rate, all other exporters of Certain Preserved Mushrooms from the PRC who have not qualified for a separate rate are deemed to be covered by this review as part of the single PRC entity of which the named exporters are a part.

[8] If one of the above-named companies do not qualify for a separate rate, all other exporters of Certain Frozen Warmwater Shrimp from the PRC who have not qualified for a separate rate are deemed to be covered by this review as part of the single PRC entity of which the named exporters are a part.

[9] If one of the above-named companies do not qualify for a separate rate, all other exporters of Small Diameter Graphite Electrodes from the PRC who have not qualified for a separate rate are deemed to be covered by this review as part of the single PRC entity of which the named exporters are a part.

[10] If one of the above-named companies do not qualify for a separate rate, all other exporters of Uncovered Innerspring Units from the PRC who have not qualified for a separate rate are deemed to be covered by this review as part of the single PRC entity of which the named exporters are a part.

Continued

During any administrative review covering all or part of a period falling between the first and second or third and fourth anniversary of the publication of an antidumping duty order under 19 CFR 351.211 or a determination under 19 CFR 351.218(f)(4) to continue an order or suspended investigation (after sunset review), the Secretary, if requested by a domestic interested party within 30 days of the date of publication of the notice of initiation of the review, will determine, consistent with *FAG Italia* v. *United States,* 291 F.3d 806 (Fed Cir. 2002), as appropriate, whether antidumping duties have been absorbed by an exporter or producer subject to the review if the subject merchandise is sold in the United States through an importer that is affiliated with such exporter or producer. The request must include the name(s) of the exporter or producer for which the inquiry is requested.

For the first administrative review of any order, there will be no assessment of antidumping or countervailing duties on entries of subject merchandise entered, or withdrawn from warehouse, for consumption during the relevant provisional-measures ''gap'' period, of the order, if such a gap period is applicable to the period of review.

Interested parties must submit applications for disclosure under administrative protective orders in accordance with 19 CFR 351.305. On January 22, 2008, the Department published *Antidumping and Countervailing Duty Proceedings: Documents Submission Procedures; APO Procedures,* 73 FR 3634 (January 22, 2008). Those procedures apply to administrative reviews included in this notice of initiation. Parties wishing to participate in any of these administrative reviews should ensure that the meet the requirements of these procedures (*e.g.,* the filing of separate letters of appearance as discussed at 19 CFR 351.103(d)).

Any party submitting factual information in an antidumping duty or countervailing duty proceeding must certify to the accuracy and completeness of that information. *See* section 782(b) of the Act. Parties are hereby reminded that revised certification requirements are in effect for company/government officials as well as their representatives in all segments of any antidumping duty or countervailing duty proceedings initiated on or after March 14, 2011. *See Certification of Factual Information to Import Administration During Antidumping and Countervailing Duty Proceedings: Interim Final Rule,* 76 FR 7491 (February 10, 2011) (''*Interim Final Rule*''), amending 19 CFR 351.303(g)(1) and (2). The formats for the revised certifications are provided at the end of the *Interim Final Rule.* The Department intends to reject factual submissions in any proceeding segments initiated on or after March 14, 2011 if the submitting party does not comply with the revised certification requirements.

These initiations and this notice are in accordance with section 751(a) of the Act (19 U.S.C. 1675(a)) and 19 CFR 351.221(c)(1)(i).

Dated: March 27, 2012.

Christian Marsh,

Deputy Assistant Secretary for Antidumping and Countervailing Duty Operations.

[FR Doc. 2012–7723 Filed 3–29–12; 8:45 am]

BILLING CODE 3510–DS–P

[11] If one of the above-named companies do not qualify for a separate rate, all other exporters of Certain Frozen Warmwater Shrimp from the Socialist Republic of Vietnam who have not qualified for a separate rate are deemed to be covered by this review as part of the single Vietnam entity of which the named exporters are a part.

[12] Pursuant to 19 CFR 351.213(c) the Department received a request to defer the administrative review with respect to Misumi Corporation for one year. The Department did not receive any objections to the deferral within 15 days after the end of the anniversary month. As such, we will initiate the administrative review with respect to Misumi Corporation in the month immediately following the next anniversary month.

DEPARTMENT OF COMMERCE

International Trade Administration

[A–570–909]

Certain Steel Nails From the People's Republic of China: Extension of Time Limit for the Preliminary Results of the Third Antidumping Duty Administrative Review

AGENCY: Import Administration, International Trade Administration, Department of Commerce.

DATES: *Effective Date:* March 30, 2012.

FOR FURTHER INFORMATION CONTACT: Jamie Blair-Walker, Office 9, AD/CVD Operations, Import Administration, International Trade Administration, U.S. Department of Commerce, 14th Street and Constitution Avenue NW., Washington, DC 20230; telephone: (202) 482–2615.

Background

On August 1, 2011, the Department of Commerce (''the Department'') published in the **Federal Register** a notice of opportunity to request an administrative review of the antidumping order on certain steel nails from the People's Republic of China (''PRC'') for the period of review August 1, 2010, through July 31, 2011.[1] Based upon requests for review from various parties, on October 3, 2011, the Department initiated the third antidumping duty administrative review on certain steel nails from the PRC, covering 383 companies.[2] The preliminary results of review are currently due May 2, 2012.

Statutory Time Limits

Section 751(a)(3)(A) of the Tariff Act of 1930, as amended (''Act''), requires the Department to make a preliminary determination within 245 days after the last day of the anniversary month of an order for which a review is requested and a final determination within 120 days after the date on which the preliminary results are published. However, if it is not practicable to complete the review within these time periods, section 751(a)(3)(A) of the Act allows the Department to extend the time limit for the preliminary determination to a maximum of 365 days after the last day of the anniversary month.

Extension of Time Limit for Preliminary Results of Review

We determine that it is not practicable to complete the preliminary results of this review within the current time limits. The Department requires additional time to analyze recently submitted supplemental questionnaire responses, which contained a significant amount of new sales and factors of production data. The additional time is needed to consider these data and their incorporation into the margin calculations for the individually-reviewed respondents. Additionally, at parties' request, the Department extended the deadline for submitting surrogate country and surrogate value data and comments. Therefore, the Department is hereby fully extending the time limits for completion of the preliminary results by 120 days. The preliminary results will now be due no later than August 30, 2012. The final results continue to be due 120 days after the publication of the preliminary results.

This notice is published in accordance with section 777(i)(1) of the Act.

[1] *See Antidumping or Countervailing Duty Order, Finding, or Suspended Investigation; Opportunity To Request Administrative Review,* 76 FR 45773 (August 1, 2011).

[2] *See Initiation of Antidumping and Countervailing Duty Administrative Reviews and Requests for Revocations in Part,* 76 FR 61076 (October 3, 2011) (''*Initiation Notice*'').

Dated: March 26, 2012.

Gary Taverman,

Acting Deputy Assistant Secretary for Antidumping and Countervailing Duty Operations.

[FR Doc. 2012–7743 Filed 3–29–12; 8:45 am]

BILLING CODE 3510–DS–P

DEPARTMENT OF COMMERCE

International Trade Administration

[A–570–918]

Steel Wire Garment Hangers From the People's Republic of China: Amended Final Results of the Second Antidumping Duty Administrative Review

AGENCY: Import Administration, International Trade Administration, Department of Commerce.

DATES: *Effective Date:* March 30, 2012.

FOR FURTHER INFORMATION CONTACT: Bob Palmer, AD/CVD Operations, Office 9, Import Administration, International Trade Administration, Department of Commerce, 14th Street and Constitution Avenue NW., Washington, DC 20230; telephone: (202) 482–0968.

SUPPLEMENTARY INFORMATION:

Background

On March 1, 2012, the Department of Commerce (''Department'') published the final results of the second administrative review of the antidumping duty order on steel wire garment hangers (''hangers'') from the People's Republic of China (''PRC'').[1] On March 5, 2012, Petitioner[2] filed a timely allegation that the Department made two ministerial errors in the *Final Results* and requested, pursuant to 19 CFR 351.224, that the Department correct the alleged ministerial errors. No other party in this proceeding submitted comments on the Department's final margin calculations. Based upon our analysis of the comments and allegations of ministerial errors, we have made changes to the margin calculations for Shanghai Wells Hanger Co., Ltd. (''Shanghai Wells'').[3] Additionally, because no other parties received a separate rate in this administrative review, the changes to Shanghai Wells' margin will not change the current rates of any other parties.

Scope of the Order

The merchandise subject to the order is steel wire garment hangers, fabricated from carbon steel wire, whether or not galvanized or painted, whether or not coated with latex or epoxy or similar gripping materials, and/or whether or not fashioned with paper covers or capes (with or without printing) and/or nonslip features such as saddles or tubes. These products may also be referred to by a commercial designation, such as shirt, suit, strut, caped, or latex (industrial) hangers. Specifically excluded from the scope of the order are wooden, plastic, and other garment hangers that are not made of steel wire. Also excluded from the scope of the order are chrome-plated steel wire garment hangers with a diameter of 3.4 mm or greater. The products subject to the order are currently classified under U.S. Harmonized Tariff Schedule (''HTSUS'') subheadings 7326.20.0020, 7323.99.9060, and 7323.99.9080.

Although the HTSUS subheadings are provided for convenience and customs purposes, the written description of the merchandise is dispositive.

Amended Final Results of the Review

The Tariff Act of 1930, as amended (''Act''), defines a ''ministerial error'' as including ''errors in addition, subtraction, or other arithmetic function, clerical errors resulting from inaccurate copying, duplication, or the like, and any other type of unintentional error which the administering authority considers ministerial.''[4] After analyzing Petitioner's comments, we have determined that we made certain ministerial errors, as defined by section 751(h) of the Act, in our calculations for the *Final Results.*

First, we agree with Petitioner that we made a ministerial error in the calculation of the surrogate financial ratios of Nasco Steel Pvt., Ltd. (''Nasco''), which were used in Shanghai Wells' margin calculation. Specifically, the Department inadvertently excluded Nasco's commission on sales from selling, general and administrative expenses (SG&A'') for the calculation of surrogate SG&A ratio calculation, when we instead intended to include Nasco's commission on sales in the surrogate SG&A ratio calculation. Lastly, we agree with Petitioner's second ministerial error allegation regarding the treatment of the net changes in finished goods inventory in the calculation of Sterling Tools Limited's (''Sterling'') surrogate financial ratio calculations. Specifically, the Department inadvertently excluded the net changes in finished goods in the surrogate SG&A and profit ratio calculations for Sterling, when we instead intended to include the net changes in finished goods inventories in Sterling's SG&A and profit ratios. Additionally, when reviewing the financial ratio calculations for J&K Wire Steel Industries Ltd. (''JK Wire''), we noted that we made the same inadvertent error in JK Wire's SG&A and profit ratio calculation.[5] For a detailed discussion of these ministerial errors, as well as the Department's analysis of these errors, *see* Memorandum to James C. Doyle, from Bob Palmer, regarding ''Second Antidumping Duty Administrative Review of Steel Wire Garment Hangers from the People's Republic of China: Ministerial Error Memorandum,'' dated concurrently with this notice (''Ministerial Memo''). The Ministerial Memo is a public document and is on file electronically via Import Administration's Antidumping and Countervailing Duty Centralized Electronic Service System (''IA ACCESS''). Access to IA ACCESS is available in the Central Records Unit (''CRU''), Main Commerce Building, Room 7046. In addition, a complete version of the Ministerial Memo can be accessed directly on the Internet at *http://www.trade.gov/ia.* The paper copy and electronic versions of the Ministerial Memo are identical in content.

Therefore, in accordance with section 751(h) of the Act and 19 CFR 351.224(e), we are amending the *Final Results* of the administrative review of steel wire garment hangers from the PRC. Listed below are the weighted average dumping margins for these amended final results:

[1] *See Steel Wire Garment Hangers From the People's Republic of China: Final Results and Final Partial Rescission of Second Antidumping Administrative Review,* 77 FR 12553 (March 1, 2012) (''*Final Results*'').

[2] M&B Metal Products Co., Inc. (''Petitioner'').

[3] In the *Final Results,* the Department found that that Shanghai Wells, Hong Kong Wells Limited (''HK Wells'') and Hong Kong Wells Limited (USA) (''USA Wells'') (collectively, ''Wells Group'') are affiliated and that Shanghai Wells and HK Wells comprise a single entity. *See Final Results,* 77 FR at 12554 n. 4. Petitioner's ministerial error allegations do not challenge, and these amended final results do not affect, that determination.

[4] *See* section 751(h) of the Act; *see also* 19 CFR 351.224(f).

[5] Petitioner states we made these adjustments to J&K Wire. However, the Department made these adjustments to Bandsidhar Granites Pvt. Ltd. (''Bansidhar'') and Nasco's financial ratios. Moreover, consistent with the Department's practice, we included net changes in traded goods in the SG&A and profit ratios for Bansidhar alone, given that we only make such an adjustment when the information is available and Bansidhar was the only surrogate company with a traded goods line item in its financial statement.

Exporter	Weighted average margin (percent)
Shanghai Wells Hanger Co., Ltd. and/or Hong Kong Wells Limited [6]	0.81
PRC-Wide Entity	187.25

Disclosure

We will disclose the calculations performed for these amended final results within five days of the date of publication of this notice to interested parties in accordance with 19 CFR 351.224(b).

Assessment Rates

Pursuant to section 751(a)(2)(A) of the Act and 19 CFR 351.212(b)(1), the Department will determine, and U.S. Customs and Border Protection (''CBP'') shall assess, antidumping duties on all appropriate entries of subject merchandise in accordance with the amended final results of this review. For assessment purpose, we calculated importer (or customer)-specific assessment rates for merchandise subject to this review. *See* 19 CFR 351.212(b)(1). Where appropriate, we calculated an *ad valorem* rate for each importer (or customer) by dividing the total dumping margins for reviewed sales to that party by the total entered values associated with those transactions. For duty-assessment rates calculated on this basis, we will direct CBP to assess the resulting *ad valorem* rate against the entered customs values for the subject merchandise. Where appropriate, we calculated a per-unit rate for each importer (or customer) by dividing the total dumping margins for reviewed sales to that party by the total sales quantity associated with those transactions. For duty-assessment rates calculated on this basis, we will direct CBP to assess the resulting per-unit rate against the entered quantity of the subject merchandise. Where an importer (or customer)-specific assessment rate is *de minimis* (*i.e.,* less than 0.50 percent), the Department will instruct CBP to assess that importer's (or customer's) entries of subject merchandise without regard to antidumping duties, in accordance with 19 CFR 351.106(c)(2). The Department intends to issue assessment instructions to CBP 15 days after the date of publication of these amended final results of review.

[6] As stated above, Shanghai Wells and HK Wells comprise a single entity. *See Final Results,* 77 FR at 12554 n. 4.

Cash Deposit Requirements

The following cash deposit requirements will be effective upon publication of the amended final results of this administrative review for all shipments of the subject merchandise entered, or withdrawn from warehouse, for consumption on or after the publication date, as provided for by section 751(a)(2)(C) of the Act: (1) For the exporters listed above, the cash deposit rate will be established by the amended final results of this review; (2) for previously investigated or reviewed PRC and non-PRC exporters not listed above that have separate rates, the cash deposit rate will continue to be the exporter-specific rate published for the most recent period; (3) for all PRC exporters of subject merchandise which have not been found to be entitled to a separate rate, the cash deposit rate will be the PRC-wide rate established in the amended final results of this review (*i.e.,* 187.25 percent); and (4) for all non-PRC exporters of subject merchandise which have not received their own rate, the cash deposit rate will be the rate applicable to the PRC exporters that supplied that non-PRC exporter. These deposit requirements, when imposed, shall remain in effect until further notice.

Reimbursement of Duties

This notice also serves as a final reminder to importers of their responsibility under 19 CFR 351.402(f) to file a certificate regarding the reimbursement of antidumping duties prior to liquidation of the relevant entries during this POR. Failure to comply with this requirement could result in the Department's presumption that reimbursement of antidumping duties has occurred and the subsequent assessment of doubled antidumping duties.

These amended final results are published in accordance with sections 751(h) and 777(i)(1) of the Act.

Dated: March 23, 2012.

Paul Piquado,

Assistant Secretary for Import Administration.

[FR Doc. 2012–7740 Filed 3–29–12; 8:45 am]

BILLING CODE 3510–DS–P

DEPARTMENT OF COMMERCE

International Trade Administration

[C–533–853]

Circular Welded Carbon-Quality Steel Pipe From India: Preliminary Affirmative Countervailing Duty Determination and Alignment of Final Countervailing Duty Determination With Final Antidumping Duty Determination

AGENCY: Import Administration, International Trade Administration, Department of Commerce.

SUMMARY: The Department of Commerce preliminarily determines that countervailable subsidies are being provided to producers and exporters of circular welded carbon-quality steel pipe (''circular welded pipe'') from India. For information on the estimated subsidy rates, see the ''Suspension of Liquidation'' section of this notice.

DATES: *Effective Date:* March 30, 2012.

FOR FURTHER INFORMATION CONTACT: Shane Subler, Thomas Schauer, or David Layton, AD/CVD Operations, Office 1, Import Administration, International Trade Administration, U.S. Department of Commerce, 14th Street and Constitution Avenue NW., Washington, DC 20230; telephone: (202) 482–0189, (202) 482–0410, and (202) 482–0371, respectively.

SUPPLEMENTARY INFORMATION:

Case History

The following events have occurred since the publication of the Department of Commerce's (''Department'') notice of initiation in the **Federal Register**. *See Circular Welded Carbon-Quality Steel Pipe from India, the Sultanate of Oman, the United Arab Emirates, and the Socialist Republic of Vietnam: Initiation of Countervailing Duty Investigations,* 76 FR 72173 (November 22, 2011) (''*Initiation Notice*''), and the accompanying Initiation Checklist.

On December 16, 2011, the U.S. International Trade Commission (''ITC'') published its affirmative preliminary determination that there is a reasonable indication that an industry in the United States is materially injured by reason of allegedly subsidized imports of circular welded pipe from India, the Sultanate of Oman, the United Arab Emirates, and the Socialist Republic of Vietnam (''Vietnam''). *See Circular Welded Carbon-Quality Steel Pipe From India, Oman, the United Arab Emirates, and Vietnam,* 76 FR 78313 (December 16, 2011).

On December 6, 2011, Petitioners [1] requested that the Department postpone the preliminary determination and extend the deadline to submit new subsidy allegations. In response to Petitioners' request, on December 19, 2011, the Department postponed the deadline for the preliminary determination in this investigation until March 26, 2012. *See Circular Welded Carbon-Quality Steel Pipe from India, the Sultanate of Oman, the United Emirates, and Vietnam: Postponement of Preliminary Determinations in the Countervailing Duty Investigations,* 76 FR 78615 (December 19, 2011). In conjunction with this postponement, the Department also postponed the deadline for the submission of new subsidy allegations until February 15, 2012. *See* Memorandum to the File from Joshua S. Morris, ''New Subsidy Allegation Deadline: *Circular Welded Carbon-Quality Steel Pipe from India, the Sultanate of Oman, the United Emirates, and Vietnam,* dated December 15, 2011. In response to requests from Petitioners for additional extensions of the deadline for the submission of new subsidy allegations, the Department subsequently extended this deadline to February 24, 2012 and then to February 28, 2012. *See* Memorandum to the File from Susan Kuhbach, ''New Subsidy Allegation Deadline: *Circular Welded Carbon-Quality Steel Pipe from India, the Sultanate of Oman, the United Emirates, and the Socialist Republic of Vietnam,* dated February 6, 2011, and Letter to All Interested Parties, dated February 24, 2011.

On December 19, 2011, we selected Lloyds Metals and Engineers Ltd. (''Lloyds'') and Zenith Birla Ltd. (''Zenith'') as the mandatory respondents in this proceeding. *See* Memorandum to Christian Marsh, Deputy Assistant Secretary for Antidumping and Countervailing Duty Operations, ''Countervailing Duty Investigation of Circular Welded Carbon-Quality Steel Pipe from India: Respondent Selection Memorandum,'' dated December 19, 2011. The public version of this memorandum and all other memoranda referenced in this notice are on file electronically via Import Administration's Antidumping and Countervailing Duty Centralized Electronic Service System (''IA ACCESS''). Access to IA ACCESS is available in the Department's Central Records Unit in Room 7046 of the main Department building.

[1] Allied Tube and Conduit, JMC Steel Group, Wheatland Tube, and United States Steel Corporation (collectively, Petitioners).

On December 22, 2011, we issued a questionnaire to the Government of India (''GOI''). *See* letter from the Department to the GOI, ''Countervailing Duty Investigation: Circular Welded Carbon-Quality Steel Pipe from India,'' dated December 22, 2011. In the cover letter of the questionnaire, we specifically requested that the GOI respond to Section II of the questionnaire, which applied to the GOI. Further, we instructed the GOI to forward the questionnaire to the mandatory respondents, Lloyds and Zenith. We requested that either the GOI or the mandatory respondents submit a response to Section III of the questionnaire, which applied to the mandatory respondents.

We received responses to the original December 22, 2011, questionnaire from the GOI on January 30, 2012 (''GQR''), and from Zenith on February 13, 2012 (''ZQR''). Supplemental questionnaires were sent to the GOI on February 10 and March 1, 2012. We received a response to the former on March 3, 2012 (''G1SR''), and to the latter on March 5, 2012 (''G2SR''). We sent supplemental questionnaires to Zenith on February 17, and February 28, 2012, and received responses on February 21, 2012 (''ZSR''), March 9, 2012 (''Z2SR''), and March 15, 2012 (''Z3SR'').

On February 22, 2012, we received deficiency comments from Wheatland Tube, one of the petitioners, pertaining to Zenith's February 13, 2012, questionnaire response.

On February 28, 2012, Wheatland Tube submitted a new subsidy allegation requesting the Department expand its countervailing duty (''CVD'') administrative review to include one additional subsidy. On March 16, 2012, the Department issued a memorandum recommending investigating the new subsidy allegation. *See* Memorandum to Susan H. Kuhbach, Director, Office 1 from David Layton, International Trade Analyst, Office 1, ''Analysis of New Subsidy Allegations,'' dated March 16, 2012.

We received pre-preliminary comments from Wheatland Tube on March 19, 2012.

Period of Investigation

The period for which we are measuring subsidies, *i.e.*, the period of investigation (''POI''), is April 1, 2010, through March 31, 2011. GOI and Zenith reported this same period as their fiscal year. *See* GQR at 1; *see also* the cover letter of Zenith's February 13, 2012, questionnaire response.

Scope Comments

In accordance with the preamble to the Department's regulations, we set aside a period of time in our *Initiation Notice* for parties to raise issues regarding product coverage, and encouraged all parties to submit comments within 20 calendar days of publication of that notice. *See Antidumping Duties; Countervailing Duties,* 62 FR 27296, 27323 (May 19, 1997), and Initiation Notice, 76 FR at 72173. On December 5, 2011, SeAH Steel VINA Corp. (''SeAH VINA''), a mandatory respondent in the concurrent CVD circular welded pipe from Vietnam investigation, filed comments arguing that the treatment of double and triple stenciled pipe in the scope of these investigations differs from previous treatment of these products under other orders on circular welded pipe. Specifically, SeAH VINA claims that the Brazilian, Korean, and Mexican orders on these products exclude ''Standard pipe that is dual or triple certified/stenciled that enters the U.S. as line pipe of a kind used for oil and gas pipelines * * *'' *See, e.g., Certain Circular Welded Non-Alloy Steel Pipe from Brazil, the Republic of Korea, and Taiwan; and Certain Circular Welded Carbon Steel Pipes and Tubes From Taiwan: Final Results of the Expedited Third Sunset Reviews of the Antidumping Duty Order,* 76 FR 66899, 66900 (Oct. 28, 2011). According to SeAH VINA: (i) If the term ''class or kind of merchandise'' has meaning, it cannot have a different meaning when applied to the same products in two different cases; and (ii) the distinction between standard and line pipe reflected in the Brazil, Korean and Mexican orders derives from customs classifications administered by U.S. Customs and Border Protection (''CBP'') and, thus, is more administrable.

On December 14, 2011, Allied Tube and Conduit, JMC Steel Group, and Wheatland Tube (collectively, ''certain Petitioners''), responded to SeAH VINA's comments stating that the scope as it appeared in the *Initiation Notice* reflected Petitioners'' intended coverage. Certain Petitioners contend that pipe that is multi-stenciled to both line pipe and standard pipe specifications and meets the physical characteristics listed in the scope (*i.e.*, is 32 feet in length or less; is less than 2.0 inches (50mm) in outside diameter; has a galvanized and/or painted (*e.g.*, polyester coated) surface finish; or has a threaded and/or coupled end finish) is ordinarily used in standard pipe applications. Certain Petitioners state that, in recent years, the Department has

rejected end-use scope classifications, preferring instead to rely on physical characteristics to define coverage, and the scope of these investigations has been written accordingly. Therefore, certain Petitioners ask the Department to reject SeAH VINA's proposed scope modification.

We agree with certain Petitioners that the Department seeks to define the scopes of its proceedings based on the physical characteristics of the merchandise. *See Notice of Final Determination of Sales at Less Than Fair Value and Affirmative Final Determination of Critical Circumstances: Circular Welded Carbon Quality Steel Pipe from the People's Republic of China,* 73 FR 31970 (June 5, 2008) and accompanying Issues and Decision Memorandum at Comment 1. Moreover, we disagree with SeAH VINA's contention that once a ''class or kind of merchandise'' has been established that the same scope description must apply across all proceedings involving the product. For example, as the Department has gained experience in administering antidumping duty (''AD'') and CVD orders, it has shifted away from end use classifications to scopes defined by the physical characteristics. *Id.* Thus, proceedings initiated on a given product many years ago may have end use classifications while more recent proceedings on the product would not. *Compare, e.g., Countervailing Duty Order: Oil Country Tubular Goods from Canada,* 51 FR 21783 (June 16, 1986) (describing subject merchandise as being ''intended for use in drilling for oil and gas'') *with Certain Oil Country Tubular Goods From the People's Republic of China: Amended Final Affirmative Countervailing Duty Determination and Countervailing Duty Order,* 75 FR 3203 (January 20, 2010) (describing the subject merchandise in terms of physical characteristics without regard to use or intended use). Finally, certain Petitioners have indicated the domestic industry's intent to include multi-stenciled products that otherwise meet the physical characteristics set out in the scope. Therefore, the Department is not adopting SeAH VINA's proposed modification of the scope.

Scope of the Investigation

This investigation covers welded carbon-quality steel pipes and tube, of circular cross-section, with an outside diameter (''O.D.'') not more than 16 inches (406.4 mm), regardless of wall thickness, surface finish (*e.g.*, black, galvanized, or painted), end finish (plain end, beveled end, grooved, threaded, or threaded and coupled), or industry specification (*e.g.*, American Society for Testing and Materials International (''ASTM''), proprietary, or other) generally known as standard pipe, fence pipe and tube, sprinkler pipe, and structural pipe (although subject product may also be referred to as mechanical tubing). Specifically, the term ''carbon quality'' includes products in which: (a) Iron predominates, by weight, over each of the other contained elements; (b) the carbon content is 2 percent or less, by weight; and (c) none of the elements listed below exceeds the quantity, by weight, as indicated:

(i) 1.80 percent of manganese;
(ii) 2.25 percent of silicon;
(iii) 1.00 percent of copper;
(iv) 0.50 percent of aluminum;
(v) 1.25 percent of chromium;
(vi) 0.30 percent of cobalt;
(vii) 0.40 percent of lead;
(viii) 1.25 percent of nickel;
(ix) 0.30 percent of tungsten;
(x) 0.15 percent of molybdenum;
(xi) 0.10 percent of niobium;
(xii) 0.41 percent of titanium;
(xiii) 0.15 percent of vanadium;
(xiv) 0.15 percent of zirconium.

Subject pipe is ordinarily made to ASTM specifications A53, A135, and A795, but can also be made to other specifications. Structural pipe is made primarily to ASTM specifications A252 and A500. Standard and structural pipe may also be produced to proprietary specifications rather than to industry specifications. Fence tubing is included in the scope regardless of certification to a specification listed in the exclusions below, and can also be made to the ASTM A513 specification. Sprinkler pipe is designed for sprinkler fire suppression systems and may be made to industry specifications such as ASTM A53 or to proprietary specifications. These products are generally made to standard O.D. and wall thickness combinations. Pipe multi-stenciled to a standard and/or structural specification and to other specifications, such as American Petroleum Institute (''API'') API–5L specification, is also covered by the scope of this investigation when it meets the physical description set forth above, and also has one or more of the following characteristics: is 32 feet in length or less; is less than 2.0 inches (50mm) in outside diameter; has a galvanized and/or painted (*e.g.*, polyester coated) surface finish; or has a threaded and/or coupled end finish.

The scope of this investigation does not include: (a) Pipe suitable for use in boilers, superheaters, heat exchangers, refining furnaces and feedwater heaters, whether or not cold drawn; (b) finished electrical conduit; (c) finished scaffolding;[2] (d) tube and pipe hollows for redrawing; (e) oil country tubular goods produced to API specifications; (f) line pipe produced to only API specifications; and (g) mechanical tubing, whether or not cold-drawn. However, products certified to ASTM mechanical tubing specifications are not excluded as mechanical tubing if they otherwise meet the standard sizes (*e.g.*, outside diameter and wall thickness) of standard, structural, fence and sprinkler pipe. Also, products made to the following outside diameter and wall thickness combinations, which are recognized by the industry as typical for fence tubing, would not be excluded from the scope based solely on their being certified to ASTM mechanical tubing specifications:

1.315 inch O.D. and 0.035 inch wall thickness (gage 20)
1.315 inch O.D. and 0.047 inch wall thickness (gage 18)
1.315 inch O.D. and 0.055 inch wall thickness (gage 17)
1.315 inch O.D. and 0.065 inch wall thickness (gage 16)
1.315 inch O.D. and 0.072 inch wall thickness (gage 15)
1.315 inch O.D. and 0.083 inch wall thickness (gage 14)
1.315 inch O.D. and 0.095 inch wall thickness (gage 13)
1.660 inch O.D. and 0.047 inch wall thickness (gage 18)
1.660 inch O.D. and 0.055 inch wall thickness (gage 17)
1.660 inch O.D. and 0.065 inch wall thickness (gage 16)
1.660 inch O.D. and 0.072 inch wall thickness (gage 15)
1.660 inch O.D. and 0.083 inch wall thickness (gage 14)
1.660 inch O.D. and 0.095 inch wall thickness (gage 13)
1.660 inch O.D. and 0.109 inch wall thickness (gage 12)
1.900 inch O.D. and 0.047 inch wall thickness (gage 18)
1.900 inch O.D. and 0.055 inch wall thickness (gage 17)
1.900 inch O.D. and 0.065 inch wall thickness (gage 16)
1.900 inch O.D. and 0.072 inch wall thickness (gage 15)
1.900 inch O.D. and 0.095 inch wall thickness (gage 13)
1.900 inch O.D. and 0.109 inch wall thickness (gage 12)
2.375 inch O.D. and 0.047 inch wall thickness (gage 18)

[2] Finished scaffolding is defined as component parts of a final, finished scaffolding that enters the United States unassembled as a ''kit.'' A ''kit'' is understood to mean a packaged combination of component parts that contain, at the time of importation, all the necessary component parts to fully assemble a final, finished scaffolding.

2.375 inch O.D. and 0.055 inch wall thickness (gage 17)
2.375 inch O.D. and 0.065 inch wall thickness (gage 16)
2.375 inch O.D. and 0.072 inch wall thickness (gage 15)
2.375 inch O.D. and 0.095 inch wall thickness (gage 13)
2.375 inch O.D. and 0.109 inch wall thickness (gage 12)
2.375 inch O.D. and 0.120 inch wall thickness (gage 11)
2.875 inch O.D. and 0.109 inch wall thickness (gage 12)
2.875 inch O.D. and 0.134 inch wall thickness (gage 10)
2.875 inch O.D. and 0.165 inch wall thickness (gage 8)
3.500 inch O.D. and 0.109 inch wall thickness (gage 12)
3.500 inch O.D. and 0.148 inch wall thickness (gage 9)
3.500 inch O.D. and 0.165 inch wall thickness (gage 8)
4.000 inch O.D. and 0.148 inch wall thickness (gage 9)
4.000 inch O.D. and 0.165 inch wall thickness (gage 8)
4.500 inch O.D. and 0.203 inch wall thickness (gage 7)

The pipe subject to this investigation is currently classifiable in Harmonized Tariff Schedule of the United States (''HTSUS'') statistical reporting numbers 7306.19.1010, 7306.19.1050, 7306.19.5110, 7306.19.5150, 7306.30.1000, 7306.30.5025, 7306.30.5032, 7306.30.5040, 7306.30.5055, 7306.30.5085, 7306.30.5090, 7306.50.1000, 7306.50.5050, and 7306.50.5070. Although the HTSUS subheadings are provided for convenience and customs purposes, the written description of the merchandise under the investigation is dispositive.

Alignment of Final Determination

On November 22, 2011, the Department initiated an AD investigation concurrent with this CVD investigation of circular welded pipe from India. *See Circular Welded Carbon-Quality Steel Pipe from India, the Sultanate of Oman, the United Arab Emirates, and the Socialist Republic of Vietnam: Initiation of Antidumping Duty Investigations,* 76 FR 72164 (November 22, 2011). The scope of the merchandise being covered is the same for both the AD and CVD investigations. On March 23, 2012, Petitioners submitted a letter, in accordance with section 705(a)(1) of the Tariff Act of 1930, as amended (''the Act''), requesting alignment of the final CVD determination with the final determination in the companion AD investigation. Therefore, in accordance with section 705(a)(1) of the Act and 19 CFR 351.210(b)(4), the final CVD determination will be issued on the same date as the final AD determination, which is currently scheduled to be issued on August 6, 2012.

Use of Facts Otherwise Available

Sections 776(a)(1) and (2) of the Act provide that the Department shall apply ''facts otherwise available'' if, *inter alia,* necessary information is not on the record or an interested party or any other person: (A) Withholds information that has been requested; (B) fails to provide information within the deadlines established, or in the form and manner requested by the Department, subject to subsections (c)(1) and (e) of section 782 of the Act; (C) significantly impedes a proceeding; or (D) provides information that cannot be verified as provided by section 782(i) of the Act.

Where the Department determines that a response to a request for information does not comply with the request, section 782(d) of the Act provides that the Department will so inform the party submitting the response and will, to the extent practicable, provide that party the opportunity to remedy or explain the deficiency. If the party fails to remedy the deficiency within the applicable time limits and subject to section 782(e) of the Act, the Department may disregard all or part of the original and subsequent responses, as appropriate. Section 782(e) of the Act provides that the Department ''shall not decline to consider information that is submitted by an interested party and is necessary to the determination but does not meet all applicable requirements established by the administering authority'' if the information is timely, can be verified, is not so incomplete that it cannot be used, and if the interested party acted to the best of its ability in providing the information. Where all of these conditions are met, the statute requires the Department to use the information if it can do so without undue difficulties.

Section 776(b) of the Act provides that the Department may use an adverse inference in applying the facts otherwise available when a party has failed to cooperate by not acting to the best of its ability to comply with a request for information. Section 776(b) of the Act also authorizes the Department to use as adverse facts available (''AFA'') information derived from the petition, the final determination, a previous administrative review, or other information placed on the record.

For the reasons explained below, the Department preliminarily determines that application of facts other available is warranted and that an adverse inference is warranted, pursuant to section 776(b) of the Act because, by not responding to our requests for information, the GOI, Zenith and Lloyds failed to cooperate by not acting to the best of their ability.

I. Government of India

The GOI did not provide information we requested that is necessary to determine whether certain programs under investigation constitute countervailable subsidies. Specifically, for the programs listed below, the GOI did not provide the information necessary to determine whether the GOI provided a financial contribution under these programs and whether the programs are specific. The GOI provided no information based on its contention that no respondent used the programs.

- Government of India Loan Guarantees Program.
- Research and Technology Scheme Under Empowered Committee Mechanism With Steel Development Fund Support.
- Special Economic Zones (''SEZ'') Programs.
- Provision of Captive Mining Rights for Coal and Iron Ore; the Provision of High-Grade Ore for LTAR.
- Programs Administered by the State Government of Maharashtra Programs (Except the Value-Added Tax Refunds Under State Government of Maharashtra Package Scheme)

CVD investigations necessarily rely on information from the government regarding the administration of the alleged subsidy programs, including information on use of the programs by the respondents. As our original questionnaire to the GOI stated, ''The government is responsible for providing the information requested (in the questionnaire) for each company respondent, for each of the respondent's cross-owned companies, and for each trading company through which the respondent sells subject merchandise to the United States.'' See Section II of the questionnaire, dated December 22, 2011, at 2. In its original questionnaire response, the GOI claimed that the respondents did not avail themselves of the programs listed above. See GQR at 77–80 and 95–110. However, it was not clear whether the GOI covered the respondents' cross-owned companies in its response.

Accordingly, in our February 10, 2012, supplemental questionnaire to the GOI, we asked the GOI to confirm that its responses for the programs listed

above covered respondents' cross-owned companies. For example, we asked the GOI to ''{c}onfirm that your response covers all GOI Loan Guarantees that the GOI provided to the mandatory respondents (including their responding cross-owned companies) on loans that were outstanding during the POI. Please coordinate with the mandatory respondents to obtain the names of these cross-owned companies if you do not already have them.'' *See* the Department's supplemental questionnaire to the GOI dated February 10, 2012, at 6. The GOI responded,

> It has been reported by the Zenith (Birla) Ltd. that neither they nor any of their crossowned companies has availed of the said scheme. The Government of India would also like to clarify that this response is based solely on the declaration of Zenith (Birla) Ltd. as the GOI does not maintain any record of the so-called cross-owned companies of the mandatory respondents. As regards Lloyds Metals & Engineers Ltd., it appears that they have since shut down manufacture of the Product under Consideration and they are not participating in the investigations. Therefore, the GOI is in no position to provide further answers to the queries of the USDOC with regard to the cross-owned companies of this particular mandatory respondent.

See the G1SR at, *e.g.*, 9.

After receiving the G1SR on February 10, 2012, we received Zenith's ZQR. As we explain in the section below for Zenith, Zenith's response in the ZQR indicated that Zenith was cross-owned with many other companies. This contradicted the GOI's claim in the GQR and G1SR that Zenith had no cross-owned companies.

Accordingly, on March 1, 2012, we sent a second supplemental questionnaire to the GOI. We noted our request to Zenith for responses on behalf of certain cross-owned companies, and we requested that the GOI update its questionnaire responses for any subsidies these cross-owned companies received. Thus, for any of the programs identified above, the GOI should have updated its response if any responding cross-owned companies used the program.

On March 5, 2012, the GOI responded to this supplemental questionnaire. The GOI stated the following:

> The response of the GOI to the First Supplemental Questionnaire was based on the information supplied by Zenith. It is presumed that Zenith had included all the above companies in their response. The Government of India would also like to reiterate that this response is also based solely on the declaration of Zenith (Birla) Ltd. as the GOI does not maintain any record of the so-called cross-owned companies of the mandatory respondents. GOI has nothing further to add.

See the G2SR at 1. Thus, the GOI did not update its original responses by either providing information on subsidies that the responding cross-owned companies received or by stating that none of Zenith's cross-owned companies for which we requested a response had used the program.

Further, for the Provision of Hot-Rolled Steel by the Steel Authority of India (''SAIL'') for Less Than Adequate Remuneration (''LTAR''), the GOI claimed in both the GQR and the G1SR that it had no involvement in the purchasing decisions of the mandatory respondents and refused to provide any information on the program. *See* GQR at 18 and G1SR at 16. The GOI did not respond to our questions and did not respond to our request in the supplemental questionnaire to explain in detail the efforts it made to obtain this necessary information. See G1SR at 16.

Finally, for the Provision of Land for LTAR, the GOI's original response stated, ''The Government of India does not have such information.'' *See* GQR at 27. Because information from the GOI in response to the questions from our December 22, 2011, questionnaire was necessary for our analysis of the program, we asked the GOI again to answer our original questions. In response, the GOI stated, ''State governments make provisions of land as a part of overall infrastructure development and the development of industry which cannot be considered as a subsidy under the ASCM.'' *See* G1SR at 26. The GOI did not respond to our questions and did not respond to our request in the supplemental questionnaire to explain in detail the efforts it made to obtain this necessary information.

As explained above, section 776(b) of the Act provides that the Department may use an adverse inference in applying the facts otherwise available when a party has failed to cooperate by not acting to the best of its ability to comply with a request for information. Section 776(b) of the Act also authorizes the Department to use as AFA information derived from the petition, the final determination, a previous administrative review, or other information placed on the record. The Department has determined that an adverse inference is warranted, pursuant to section 776(b) of the Act because, by not responding to our requests for information with respect to these programs, the GOI failed to cooperate by not acting to the best of its ability. When the government fails to provide requested information concerning alleged subsidy programs, the Department, as AFA, typically finds that a financial contribution exists under the alleged program and that the program is specific. *See, e.g.*, *Notice of Preliminary Results of Countervailing Duty Administrative Review: Certain Cut-to-Length Carbon-Quality Steel Plate from the Republic of Korea,* 71 FR 11397, 11399 (March 7, 2006) (unchanged in the *Notice of Final Results of Countervailing Duty Administrative Review: Certain Cut-to-Length Carbon-Quality Steel Plate from the Republic of Korea,* 71 FR 38861 (July 10, 2006), in which the Department relied on adverse inferences in determining that the Government of Korea directed credit to the steel industry in a manner that constituted a financial contribution and was specific to the steel industry within the meaning of sections 771(5)(D) and 771(5A)(D)(iii) of the Act, respectively).

Accordingly, as AFA, we preliminarily determine that the GOI Loan Guarantees program, the Research and Technology Scheme Under Empowered Committee Mechanism with Steel Development Fund Support, all of the SEZ Programs, all of the Input Programs (including the provision of hot-rolled steel by SAIL for LTAR), and all of the State Government of Maharashtra Programs (including the provision of land for LTAR, but with the exception of the Value-Added Tax (''VAT'') Refunds under State Government of Maharashtra Package Scheme) provided a financial contribution within the meaning of section 771(5)(D) of the Act and were specific within the meaning of 771(5A) of the Act. For further details with respect to these programs, see the ''Analysis of Programs'' section, below.

II. Lloyds

Lloyds did not provide any of the information requested by the Department that is necessary to determine a CVD rate for this preliminary determination. Specifically, Lloyds did not respond to the Department's December 22, 2011, questionnaire. As a result, we have none of the required data necessary to calculate a subsidy rate for Lloyds. Accordingly, in reaching our preliminary determination, pursuant to section 776(a)(2)(A) and (C) of the Act, we have based Lloyds's CVD rate on facts otherwise available.

The Department has determined that an adverse inference is warranted, pursuant to section 776(b) of the Act because, by not responding to our questionnaire, Lloyds failed to cooperate by not acting to the best of its

ability. Accordingly, our preliminary determination is based on AFA.

III. Zenith

Zenith did not provide information we requested that is necessary to determine a CVD rate for this preliminary determination. Specifically, among numerous other deficiencies, Zenith did not provide complete responses with respect to its cross-owned companies.

Our December 22, 2011, questionnaire instructed the respondents that they must provide a complete questionnaire response for all cross-owned affiliates that meet one of the following criteria: (1) The cross-owned company produces the subject merchandise; (2) the cross-owned company is a holding company or a parent company (with its own operations) of the respondent; (3) the cross-owned company supplies an input product that is primarily dedicated to the production of the subject merchandise; (4) the cross-owned company has received a subsidy and transferred it to the respondent; (5) the cross-owned company is not a producer or manufacturer but provides a good or service to the respondent. *See* Section III of the questionnaire dated December 22, 2011, at 2. Regarding its ownership, Zenith initially only reported that it ''has been a Birla Group Company (under the management of Birla family) since incorporation in the year 1960.'' *See* ZQR at 5. Zenith also identified 38 affiliated companies in its initial response, but claimed that none were cross-owned companies and provided no response for any of them. *Id.* at 3 and Annexure 1.

On February 17, 2012, we sent a supplemental questionnaire to Zenith to clarify the relationship between Zenith, the affiliated companies Zenith identified in Annexure 1 of the ZQR, and Birla Group. *See* the Department's supplemental questionnaire dated February 17, 2012. In its response regarding the relationship of Birla Group and Zenith, Zenith stated, ''Since Mr. Yashovardhan Birla is heading (Zenith) and he controls (Zenith) through other his affiliated companies and other entities and therefore we recognize all these companies and other entities as Yash Birla Group.'' *See* ZSR at 1. Regarding the affiliated companies Zenith identified at Annexure 1 of the ZQR, Zenith stated, ''it is clarified that these all affiliated companies along with Zenith Birla (India) Limited is controlled and managed by Yash Birla Group either through common management or by voting rights.'' [3] Therefore, Zenith's responses indicate that Yash Birla Group, or the ''companies and other entities'' that are collectively Yash Birla Group, was the parent company of Zenith by virtue of its control of Zenith. Furthermore, Zenith's responses indicate that Zenith was cross-owned with all 38 affiliated companies under 19 CFR 351.525(b)(6)(vi) through Yash Birla Group's common control of Zenith and all of its reported affiliates.

Despite the instructions in the December 22, 2011, questionnaire that Zenith provide a complete response for a parent company (*i.e.*, the second criterion indicated above), Zenith did not provide a response for the Yash Birla Group, or the ''companies and other entities'' that are collectively Yash Birla Group. Based on Zenith's responses to the ZQR and ZSR, Yash Birla Group is the parent company of Zenith by virtue of its control of Zenith. In addition, we identified at least three other cross-owned companies for which Zenith should have provided a response based on information in the ZQR and ZSR. Zenith acknowledged that one of these companies, Birla Power Solutions Limited, supplied raw material to Zenith during the POI. *See* ZSR at 2. Furthermore, the financial statements Zenith submitted with the ZQR indicate that Zenith purchased goods and services from ''related parties,'' which indicates these related parties potentially met the third and fifth criteria indicated above from our December 22, 2011, questionnaire. *See* ZQR at Annexures 3 though 5 and our supplemental questionnaire dated February 28, 2012, at 4.

We sent a second supplemental questionnaire to Zenith to request responses for all cross-owned companies that meet one or more of the criteria identified in our December 22, 2011, questionnaire, as well as to address other deficiencies in Zenith's response. Regarding cross-owned companies, we requested the following:

- We stated that Zenith's responses indicated that Yash Birla Group was the parent company, either directly or indirectly, of Zenith during the POI. Thus, we requested a complete questionnaire response on behalf of Yash Birla Group or the collective ''companies and other entities'' to which Zenith referred as Yash Birla Group at page 1 of the ZSR.
- We requested a response on behalf of Birla Power Solutions Limited, a company cross-owned with Zenith through Yash Birla Group's common control. Zenith acknowledged in the ZSR that this company provided raw materials to Zenith during the POI. See ZSR at 2.
- We requested a response on behalf of Birla Global Corporate Pvt. Limited, a cross-owned company under Yash Birla Group's common control, because Zenith's financial statements indicated that Zenith had charges for services from this company during the POI.
- We requested a complete questionnaire response on behalf of Tungabhadra Holdings Private Limited (''THPL''). Zenith's submitted financial statements indicated that Zenith merged with THPL in 2009 and that THPL was the original owner of two of Zenith's three plants. Thus, subsidies that THPL received prior to its merger with Zenith would be attributable to Zenith.
- The financial statements Zenith submitted with the ZQR indicated that Zenith purchased goods and services from ''related parties,'' which indicates that these related parties potentially met the third and fifth criteria indicated above from our December 22, 2011, questionnaire. Therefore, we asked Zenith to identify these ''related parties'' and to provide responses on behalf of any companies within this group that were cross-owned with Zenith through Yash Birla Group's common control.

We requested that Zenith provide complete questionnaire responses for any other cross-owned companies that met one or more of the criteria identified in our December 22, 2011, questionnaire.

For a complete list of the questions, *see* our supplemental questionnaire dated February 28, 2012, at 1–5.

Zenith asked for two extensions of the deadline for responding to our February 28, 2012, supplemental questionnaire. *See* Zenith's letter entitled ''Extension Request'' dated March 5, 2012, and Zenith's letter dated March 12, 2012. Because of the impending fully extended deadline for the preliminary determination, we were only able to grant Zenith a partial extension. *See* our letters to Zenith dated March 6, 2012, and March 12, 2012.

In its response, Zenith filed what it claimed was ''a complete response on behalf of Yash Birla Group.'' *See* Z3SR at 1. Zenith filed individual responses on behalf of seven individual companies, which Zenith described as follows:

> We wish to clarify that entities mentioned at serial number 1 to 6 were involved in manufacturing and export of various products but not the subject merchandise and all of them have received any of various subsidy program as identified by the DOC during the POI and therefore we have reported separate response for each of them and same is enclosed as Annexure-48 to Annexure-53. As far as (Birla Global Corporate Pvt. Limited) is concerned Zenith Birla (India) Limited has paid service charges to that entity and therefore we have reported

[3] Zenith clarified that the company it referred to as ''Birla Group'' in the ZQR was the same as Yash Birla Group (''It is clarified that mention of Birla Group here and elsewhere in our earlier response refers to Yash Birla Group.'') *See* ZSR at 1–2.

separate response for that entity and same is enclosed as Annexure-54.

Id. at 2.

Zenith also filed one response that it claimed covered 28 other companies. In this response, Zenith stated the following:

> We further wish to clarify that all other 28 companies of Yash Birla Group as identified in Annexure-56 were neither involved in production or sales of subject merchandise nor any of them have any export sales and therefore in absence of export sales question of export subsidy does not arise at all and therefore we have reported a single response for all these companies as Annexure-55.

Id.

Zenith did not provide information we requested that is necessary to determine a CVD rate for this preliminary determination for the following reasons. First, we requested that Zenith respond on behalf of the Yash Birla Group because, as we described above, Zenith's responses indicate that Yash Birla Group was the parent company to Zenith. *See* the supplemental questionnaire dated February 28, 2012, at 1–2. In response, Zenith filed incomplete responses on behalf of individual companies under the control of the Yash Birla Group (*see* below), but filed no response on behalf of the Yash Birla Group. *See* Z3SR at 2. Therefore, we have no response for Yash Birla Group, which is Zenith's parent company based on Zenith's responses. Consequently, we cannot identify subsidies Zenith's controlling or parent company received that may be attributable to Zenith under 19 CFR 351.525(b)(6)(iii).

Second, we are not able to identify the universe of cross-owned companies with subsidies attributable to Zenith. Although Zenith initially responded that it has no cross-owned companies, Zenith's responses revealed that Zenith is cross-owned with 38 companies through Yash Birla Group's common control. *See* ZQR at Annexure 1. In accordance with the instructions in the original questionnaire, Zenith should have responded on behalf of any of these companies that may have received subsidies attributable to Zenith under our regulations. For example, subsidies to a cross-owned input supplier to Zenith are attributable to Zenith under 19 CFR 351.525(b)(6)(iv) if production of the input product is primarily dedicated to production of the downstream product. As we stated above, Zenith's financial statements showed purchases from ''related parties,'' suggesting that Zenith may have cross-owned input suppliers with subsidies attributable to Zenith under 19 CFR 351.525(b)(6)(iv). Thus, we requested that Zenith identify these companies. *See* the supplemental questionnaire dated February 28, 2012, at 4. Zenith did not answer this question. *See* Z3SR at 5. Consequently, we do not know the universe of cross-owned companies for which Zenith should have provided questionnaire responses, and we do not know the universe of subsidies attributable to Zenith that these cross-owned companies received.

Third, Zenith's responses on behalf of its cross-owned companies in the Z3SR are unusable for the following reasons. For 28 of these companies, Zenith claimed that none received any of the subsidies under investigation. Id. at Annexure 56. Zenith, however, argued that it was not required to provide financial statements or tax returns for any of these companies because they did have export sales and, thus, the question of receiving any subsidy benefit was not relevant. *Id.* Under the Department's regulations, however, the universe of cross-owned companies receiving subsidies attributable to Zenith is not limited to cross-owned companies that export. *See* 19 CFR 351.525(b) and (c).

In the individual responses for seven specific companies in the Z3SR, Zenith failed to provide requested worksheets reconciling sales to the financial statements. *Id.* at Annexures 48–54. The sales as reported are unusable to calculate the level of subsidy benefits if they include intercompany sales with other responding cross-owned companies. Because Zenith did not provide the requested reconciliations, we cannot determine whether Zenith properly excluded these sales.

Moreover, Zenith did not provide requested documentation and benefit amounts for the seven individual companies in the Z3SR on the grounds that any benefits the companies received were not related to subject merchandise. *Id., e.g.,* at Annexure 48 at 8. Absent a determination by the Department that a subsidy is ''tied'' to a specific product under 19 CFR 351.525(b)(5), the Department does not limit the attribution of a benefit from a subsidy program to a specific product. The Department bases these determinations on information on the record, including the questionnaire responses of respondent companies. Therefore, it is incumbent on Zenith to provide information necessary for our determination by submitting complete and timely responses to the Department's questionnaires.

Furthermore, Zenith did not respond with respect to certain programs on the grounds that its cross-owned companies had not used the program ''during the POI,'' even though we specifically asked for reporting during the entire average useful life (''AUL'') period. *Id., e.g.,* at Annexure 48 at 20.

Also, certain cross-owned companies for which Zenith reported no subsidy information show subsidies under investigation in their annual reports. For example, the 2010–2011 Annual Report of Birla Precision Technologies Limited identifies a Sales Tax Deferred Payment Loan, a Mahartasha Value Added Tax Credit, an Export Promotion Capital Goods Scheme, an Export-oriented Unit, and consumption of steel during the POI (indicating that this company purchased steel during the POI). *Id.,* Annexure 48, at 31, 32, and 37. All of these items in the Annual Report relate to programs under investigation. In its narrative response, however, Zenith stated that the questions in the questionnaire were ''not applicable to us'' and did not report any subsidies or answer any of the questions from the December 22, 2011, questionnaire. *Id.* at 8 and 11. *See also id.* at 17 and 20.

Finally, Zenith also did not provide a complete questionnaire response on behalf of itself. Zenith's financial statements show that Zenith merged with THPL, which was the previous owner of two of Zenith's three plant locations during the POI. *See* ZQR at Annexure 4 at 12. Although Zenith later claimed that its response ''includes all the benefits received by Tungabhadra Holdings Private Limited in the AUL period,'' Zenith provided no requested information (such as financial statements or description of operations or benefits received prior to its amalgamation with Zenith in 2009) with respect to THPL. This makes it impossible to evaluate what subsidies THPL may have availed prior to its amalgamation with Zenith which could potentially be attributable to Zenith. *See* Z3SR at 3.

Furthermore, Zenith responded that it did not purchase land from the GOI during the AUL period. *Id.* at 4. Zenith's response indicates, however, that THPL ''acquired Murbad property (held by Sunlight Pipes and Tubes Private Limited) from Andhra Bank in a public auction in year 2005.'' *Id.* at 4. Publicly available information shows that the Government of India owned a majority of the shares of Andhra Bank in 2005. *See* Memorandum to file, entitled ''Calculation of the Adverse Facts Available Rate for Lloyds Metals and Engineers Ltd. and Zenith Birla Ltd.,'' dated March 26, 2012, at Attachment III. Zenith's response also indicates that the Tarapur plant was ''acquired by

Tungabhadra Holdings Private Limited from Podar Tubes and Tyers Private Limited and part land (G–39) for Tarapur plant were acquired by the Tungabhadra Holdings Private Limited in a public auction by Debt Recovery Tribunal in a year 2003.'' *Id.* at 4. Publicly available information shows that Debt Recovery Tribunals are entities constituted by the GOI. *See* Memorandum to file, entitled ''Calculation of the Adverse Facts Available Rate for Lloyds Metals and Engineers Ltd. and Zenith Birla Ltd.,'' dated March 26, 2012, at Attachment III. Thus, Zenith's claim in the Z3QR that its Murbad and Tarapur plants were ''not acquired from any government authority'' does not take into account this information. By not responding to the questions regarding land received at less than adequate remuneration, Zenith prevented us from evaluating whether these plants received any subsidies which could potentially be attributable to Zenith.

Because of the numerous deficiencies identified above, it is impossible to calculate a credible subsidy rate based on Zenith's responses. We provided Zenith two chances, including multiple deadline extensions, to provide a complete questionnaire response. Zenith filed no notification of difficulty in responding to the questionnaire within 14 days of the date of receipt of the questionnaire, as required by our regulations and the questionnaire. *See* Section III of the questionnaire dated December 22, 2011, at 3; *see also* 19 CFR 351.301(c)(2)(iv). Accordingly, in reaching our preliminary determination, pursuant to sections 776(a)(2)(A) and (C) of the Act, we have based Zenith's CVD rate on facts otherwise available. Moreover, Zenith's failure to provide complete responses, as described above, despite our repeated requests for such responses, constitutes a failure on Zenith's part to cooperate by not acting to the best of its ability. Accordingly, our preliminary determination is based on AFA.

Selection of the Adverse Facts Available Rate

In deciding which facts to use as AFA, section 776(b) of the Act and 19 CFR 351.308(c)(1) authorize the Department to rely on information derived from (1) the petition, (2) a final determination in the investigation, (3) any previous review or determination, or (4) any information placed on the record. The Department's practice when selecting an adverse rate from among the possible sources of information is to ensure that the rate is sufficiently adverse ''as to effectuate the purpose of the facts available role to induce respondents to provide the Department with complete and accurate information in a timely manner.'' *See Notice of Final Determination of Sales at Less than Fair Value: Static Random Access Memory Semiconductors From Taiwan;* 63 FR 8909, 8932 (February 23, 1998). The Department's practice also ensures ''that the party does not obtain a more favorable result by failing to cooperate than if it had cooperated fully.'' *See* Statement of Administrative Action accompanying the Uruguay Round Agreements Act, H.R. Doc. No. 316, 103d Cong., 2d Session (1994) (''SAA''), at 870. In choosing the appropriate balance between providing a respondent with an incentive to respond accurately and imposing a rate that is reasonably related to the respondent's prior commercial activity, selecting the highest prior margin ''reflects a common sense inference that the highest prior margin is the most probative evidence of current margins, because, if it were not so, the importer, knowing of the rule, would have produced current information showing the margin to be less.'' *See Rhone Poulenc, Inc.* v. *United States,* 899 F.2d 1185, 1190 (Fed. Cir. 1990).

In assigning net subsidy rates for each of the programs for which specific information was required from Lloyds and Zenith, we were guided by the Department's approach in prior India CVD reviews as well as recent CVD investigations involving the People's Republic of China. *See, e.g., Certain Hot-Rolled Carbon Steel Flat Products from India: Final Results and Partial Rescission of Countervailing Duty Administrative Review,* 74 FR 20923 (May 6, 2009) (''*Fifth HRS Review*''), and accompanying Issues and Decision Memorandum (''*Fifth HRS Review Decision Memorandum*''), at ''SGOC Industrial Policy 2004–2009'' section; *see also Circular Welded Austenitic Stainless Pressure Pipe from the People's Republic of China: Final Affirmative Countervailing Duty Determination,* 74 FR 4936 (January 28, 2009), and accompanying Issues and Decision Memorandum at ''Application of Facts Available and Use of Adverse Inferences'' section.

It is the Department's practice in CVD proceedings to select, as AFA, the highest calculated rate in any segment of the proceeding.[4] In previous CVD investigations of products from India, we adapted the practice to use the highest rate calculated for the same or similar program in another India CVD proceeding. Thus, under this practice, for investigations involving India, the Department computes the total AFA rate for non-cooperating companies generally using program-specific rates calculated for the cooperating respondents in the instant investigation or calculated in prior India CVD cases. Specifically, for programs other than those involving income tax exemptions and reductions, the Department applies the highest calculated rate for the identical program in the investigation if a responding company used the identical program, and the rate is not zero. If there is no identical program within the investigation, the Department uses the highest non-*de minimis* rate calculated for the same or similar program (based on treatment of the benefit) in another India CVD proceeding. Absent an above-*de minimis* subsidy rate calculated for the same or similar program, the Department applies the highest calculated subsidy rate for any program otherwise listed that could conceivably be used by the non-cooperating companies.[5]

In this case, there is no appropriate information on the record of this investigation from which to select appropriate AFA rates for any of the subject programs. Although Zenith provided some information for some of the programs with respect to itself, it provided no usable information on subsidies received with respect to any of its cross-owned companies, which means we cannot ascertain the total amount of subsidies attributable to Zenith's sales. As a result, it is not possible for us to calculate an accurate subsidy rate for any of the programs alleged. Furthermore, because this is an investigation, we have no previous segments of this proceeding from which to draw potential AFA rates.

For the alleged income tax programs pertaining to either the reduction of the income tax rates or the payment of no income tax, we have applied an adverse inference that the respondents paid no income tax during the POI. The standard income tax rate for corporations in India is 35 percent. See the petition dated October 26, 2011, at Exhibit III–A–18. Therefore, the highest possible benefit for the income tax rate

[4] *See, e.g., Laminated Woven Sacks From the People's Republic of China: Final Affirmative Countervailing Duty Determination and Final Affirmative Determination, in Part, of Critical Circumstances,* 73 FR 35639 (June 24, 2008), and accompanying Issues and Decision Memorandum at ''Selection of the Adverse Facts Available.''

[5] *See, e.g., Lightweight Thermal Paper from the People's Republic of China: Final Affirmative Countervailing Duty Determination,* 73 FR 57323 (October 2, 2008), and accompanying Issues and Decision Memorandum at ''Selection of the Adverse Facts Available Rate.''

programs is 35 percent. We are applying the 35 percent AFA rate on a combined basis (*i.e.*, the income tax programs combined provided a 35 percent benefit).

For programs other than those involving income tax exemptions and reductions, we applied the highest non-*de minimis* rate calculated for the same or similar program in another India CVD proceeding. Absent an above-*de minimis* subsidy rate calculated for the same or similar program, we applied the highest calculated subsidy rate for any program otherwise listed that could conceivably be used by the mandatory company respondents.[6]

For a discussion of the application of the individual AFA rates for programs preliminarily determined to be countervailable, see the ''Analysis of Programs'' section, below.

Corroboration of Secondary Information

Section 776(c) of the Act provides that, when the Department relies on secondary information rather than on information obtained in the course of an investigation or review, it shall, to the extent practicable, corroborate that information from independent sources that are reasonably at its disposal. Secondary information is defined as ''information derived from the petition that gave rise to the investigation or review, the final determination concerning the subject merchandise, or any previous review under section 751 concerning the subject merchandise.'' *See* SAA at 870. The SAA provides that to ''corroborate'' secondary information, the Department will satisfy itself that the secondary information to be used has probative value. *See* SAA at 870. The Department will, to the extent practicable, examine the reliability and relevance of the information to be used. The SAA emphasizes, however, that the Department need not prove that the selected facts available are the best alternative information. See SAA at 869–870.

With regard to the reliability aspect of corroboration, unlike other types of information, such as publicly available data on the national inflation rate of a given country or national average interest rates, there typically are no independent sources for data on company-specific benefits resulting from countervailable subsidy programs. With respect to the relevance aspect of corroboration, the Department will consider information reasonably at its disposal in considering the relevance of information used to calculate a countervailable subsidy benefit. The Department will not use information where circumstances indicate that the information is not appropriate as AFA. *See, e.g., Fresh Cut Flowers From Mexico; Final Results of Antidumping Duty Administrative Review,* 61 FR 6812 (February 22, 1996). In the instant case, no evidence has been presented or obtained that contradicts the relevance of the information relied upon in a prior India CVD proceeding. Therefore, in the instant case, the Department preliminarily finds that the information used has been corroborated to the extent practicable.

Analysis of Programs

A. Export Oriented Unit Schemes

1. Duty-Free Import of All Types of Goods, Including Capital Goods and Raw Materials

The GOI reported that an export oriented unit (''EOU'') ''may import without payment of duty all types of goods, including capital goods and raw material, as defined in the Policy, required by it for manufacture, services, trading or in connection therewith.'' *See* GQR at 26. Accordingly, we preliminarily determine that this program provides a financial contribution in the form of revenue forgone within the meaning of section 771(5)(D)(ii) of the Act. The GOI also reported that ''{u}nits undertaking to export their entire production of goods and services, except permissible sales in the Domestic Tariff Area, as per this policy, may be set up under the EOU Scheme for manufacture of goods.'' *See* GQR at 26. Accordingly, we preliminarily determine that this program is contingent upon export and, therefore, is specific within the meaning of section 771(5A)(B) of the Act.

Absent the cooperation of Lloyds and Zenith (including its cross-owned companies), we preliminarily determine that the respondents' submissions do not constitute complete and verifiable evidence, within the meaning of sections 782(e)(3) and (2) of the Act, respectively, demonstrating that the respondents or any of their cross-owned affiliates did not benefit from this program during the POI. Therefore, as AFA we find that both Lloyds and Zenith used and benefitted from this program within the meaning of section 771(5)(E) of the Act.

For this program, we are assigning a net subsidy rate of 14.61 percent *ad valorem,* which corresponds to the highest above *de minimis* subsidy rate calculated for a similar program in any segment of any proceeding involving India. *See Notice of Final Affirmative Countervailing Duty Determination: Polyethylene Terephthalate Film, Sheet, and Strip (PET Film) From India,* 67 FR 34905 (May 16, 2002) (''*PET Film Investigation*''), and accompanying Issues and Decision Memorandum (''*PET Film Investigation Decision Memorandum*'') at the ''DEPS'' section.

2. Reimbursement of Central Sales Tax (''CST'') Paid on Goods Manufactured in India

The GOI reported that ''Export Oriented Units (EOUs) and units in Export Processing Zones (EPZs), Electronic Hardware Technology Park (EHTP), Software Technology Park (STP) and Special Economic Zones (SEZ) will be entitled to full reimbursement of Central Sales Tax (CST) paid by them on purchases made from the Domestic Tariff Area (DTA), for production of goods and services as per Exim Policy.'' *See* GQR at 27. Accordingly, we preliminarily determine that this program provides a financial contribution in the form of revenue forgone within the meaning of section 771(5)(D)(ii) of the Act. The GOI also reported that ''{u}nits undertaking to export their entire production of goods and services, except permissible sales in the Domestic Tariff Area, as per this policy, may be set up under the EOU Scheme for manufacture of goods.'' *See* GQR at 26. Accordingly, we preliminarily determine that this program is contingent upon export and, therefore, is specific within the meaning of section 771(5A)(B) of the Act.

Absent the cooperation of Lloyds and Zenith (including its cross-owned companies), we preliminarily determine that the respondents' submissions do not constitute complete and verifiable evidence, within the meaning of sections 782(e)(3) and (2) of the Act, respectively, demonstrating that the respondents or any of their cross-owned affiliates did not benefit from this program during the POI. Therefore, as AFA we find that both Lloyds and Zenith used and benefitted from this program within the meaning of section 771(5)(E) of the Act.

For this program, we are assigning a net subsidy rate of 3.09 percent *ad valorem,* which corresponds to the highest above *de minimis* subsidy rate calculated for a similar program in any segment of any proceeding involving India. *See Final Results of Countervailing Duty Administrative Review: Certain Hot-Rolled Carbon Steel*

[6] *See, e.g., Certain Kitchen Shelving and Racks from the People's Republic of China: Final Affirmative Countervailing Duty Determination,* 74 FR 37012, 37013 (July 27, 2009); *see also Sodium Nitrite From the People's Republic of China: Final Affirmative Countervailing Duty Determination,* 73 FR 38981, 38982 (July 8, 2008).

Flat Products from India, 71 FR 28665 (May 17, 2006), and accompanying Issues and Decision Memorandum (''*Second HRS Review Decision Memorandum*'') at the ''State Government of Gujarat Tax Incentives'' section.

3. Duty Drawback on Fuel Procured From Domestic Oil Companies

The GOI reported that ''{f}uels procured from the depots of domestic oil companies on payment of excise duty by EOU/EHTP/STP/BTP will be eligible for reimbursement in the form of terminal excise duty in addition to drawback rates notified by DGFT from time to time provided the recipient unit does not avail CENVAT credit/rebate on such goods.'' *See* GQR at 27–28. Accordingly, we preliminarily determine that this program provides a financial contribution in the form of revenue forgone within the meaning of section 771(5)(D)(ii) of the Act. The GOI also reported that ''{u}nits undertaking to export their entire production of goods and services, except permissible sales in the Domestic Tariff Area, as per this policy, may be set up under the EOU Scheme for manufacture of goods.'' *See* GQR at 26. Accordingly, we preliminarily determine that this program is contingent upon export and, therefore, is specific within the meaning of section 771(5A)(B) of the Act.

Absent the cooperation of Lloyds and Zenith (including its cross-owned companies), we preliminarily determine that the respondents' submissions do not constitute complete and verifiable evidence, within the meaning of sections 782(e)(3) and (2) of the Act, respectively, demonstrating that the respondents or any of their cross-owned affiliates did not benefit from this program during the POI. Therefore, as AFA we find that both Lloyds and Zenith used and benefitted from this program within the meaning of section 771(5)(E) of the Act.

For this program, we are assigning a net subsidy rate of 14.61 percent *ad valorem,* which corresponds to the highest above *de minimis* subsidy rate calculated for a similar program in any segment of any proceeding involving India. *See PET Film Investigation Decision Memorandum* at the ''DEPS'' section.

4. Exemption From Income Tax Under Section 10A and 10B of Income Tax Act

The GOI reported that ''Section 10A of the Income-tax Act provides for a five-year total tax holiday to industrial undertakings which manufacture or produce any article or thing and are set up in notified Free Trade Zones (FTZs)'' and that ''section 10B of the Income-tax Act allows a five-year tax holiday to approved 100% export-oriented undertakings (EOUs) which manufacture or produce any article or thing.'' *See* GQR at 28. Accordingly, we preliminarily determine that this program provides a financial contribution in the form of revenue forgone within the meaning of section 771(5)(D)(ii) of the Act. The GOI also reported that ''{u}nits undertaking to export their entire production of goods and services, except permissible sales in the Domestic Tariff Area, as per this policy, may be set up under the EOU Scheme for manufacture of goods.'' *See* GQR at 26. Accordingly, we preliminarily determine that this program is contingent upon export and, therefore, is specific within the meaning of section 771(5A)(B) of the Act.

Absent the cooperation of Lloyds and Zenith (including its cross-owned companies), we preliminarily determine that the respondents' submissions do not constitute complete and verifiable evidence, within the meaning of sections 782(e)(3) and (2) of the Act, respectively, demonstrating that the respondents or any of their cross-owned affiliates did not benefit from this program during the POI. Therefore, as AFA we find that both Lloyds and Zenith used and benefitted from this program within the meaning of section 771(5)(E) of the Act.

As explained above, for the alleged income tax programs pertaining to either the reduction of the income tax rates or the payment of no income tax, we are applying the 35 percent AFA rate on a combined basis (*i.e.,* the income tax programs combined provided a 35 percent benefit).

5. Exemption From Payment of Central Excise Duty on Goods Manufactured in India and Procured From a Domestic Tariff Area

The GOI reported that ''{t}he EOUs can procure goods from DTA without payment of Central Excise duty subject to following of the Chapter X procedure of erstwhile Central Excise Rules.'' *See* GQR at 29. Most of the products manufactured in India are assessed excise duties at the rate of 16 percent. However, manufactured goods purchased domestically qualify for exemption from this excise duty under this program. Accordingly, we preliminarily determine that this program provides a financial contribution in the form of revenue forgone within the meaning of section 771(5)(D)(ii) of the Act. The GOI also reported that ''{u}nits undertaking to export their entire production of goods and services, except permissible sales in the Domestic Tariff Area, as per this policy, may be set up under the EOU Scheme for manufacture of goods.'' *See* GQR at 26. Accordingly, we preliminarily determine that this program is contingent upon export and, therefore, is specific within the meaning of section 771(5A)(B) of the Act.

Absent the cooperation of Lloyds and Zenith (including its cross-owned companies), we preliminarily determine that the respondents' submissions do not constitute complete and verifiable evidence, within the meaning of sections 782(e)(3) and (2) of the Act, respectively, demonstrating that the respondents or any of their cross-owned affiliates did not benefit from this program during the POI. Therefore, as AFA we find that both Lloyds and Zenith used and benefitted from this program within the meaning of section 771(5)(E) of the Act.

For this program, we are assigning a net subsidy rate of 14.61 percent *ad valorem,* which corresponds to the highest above *de minimis* subsidy rate calculated for a similar program in any segment of any proceeding involving India. *See PET Film Investigation Decision Memorandum* at the ''DEPS'' section.

6. Reimbursement of CST on Goods Manufactured in India and Procured From a Domestic Tariff Area

The GOI reported that ''{t}he EOUs can procure goods from DTA without payment of Central Excise duty subject to following of the Chapter X procedure of erstwhile Central Excise Rules.'' *See* GQR at 29. Accordingly, we preliminarily determine that this program provides a financial contribution in the form of revenue forgone within the meaning of section 771(5)(D)(ii) of the Act. The GOI also reported that ''{u}nits undertaking to export their entire production of goods and services, except permissible sales in the Domestic Tariff Area, as per this policy, may be set up under the EOU Scheme for manufacture of goods.'' *See* GQR at 26. Accordingly, we preliminarily determine that this program is contingent upon export and, therefore, is specific within the meaning of section 771(5A)(B) of the Act.

Absent the cooperation of Lloyds and Zenith (including its cross-owned companies), we preliminarily determine that the respondents' submissions do not constitute complete and verifiable evidence, within the meaning of sections 782(e)(3) and (2) of the Act, respectively, demonstrating that the respondents or any of their cross-owned affiliates did not benefit from this

program during the POI. Therefore, as AFA we find that both Lloyds and Zenith used and benefitted from this program within the meaning of section 771(5)(E) of the Act.

For this program, we are assigning a net subsidy rate of 3.09 percent *ad valorem,* which corresponds to the highest above *de minimis* subsidy rate calculated for a similar program in any segment of any proceeding involving India. *See Second HRS Review Decision Memorandum* at the ''State Government of Gujarat Tax Incentives'' section.

B. Export Promotion Capital Goods Scheme

The GOI reported that ''{t}he scheme allows import of capital goods for pre production, production and post production at 5% Customs duty subject to an export obligation equivalent to 8 times of duty saved on capital goods imported under EPCG scheme to be fulfilled over a period of 8 years reckoned from the date of issuance of license.'' *See* GQR at 41. Thus, under this program, Indian companies may import capital equipment at reduced rates by fulfilling certain export obligations. Accordingly, we preliminarily determine that this program provides a financial contribution in the form of revenue forgone within the meaning of section 771(5)(D)(ii) of the Act. Moreover, because this duty reduction is subject to an export obligation, we preliminarily determine that this program is specific within the meaning of section 771(5A)(B) of the Act.

Absent the cooperation of Lloyds and Zenith (including its cross-owned companies), we preliminarily determine that the respondents' submissions do not constitute complete and verifiable evidence, within the meaning of sections 782(e)(3) and (2) of the Act, respectively, demonstrating that the respondents or any of their cross-owned affiliates did not benefit from this program during the POI. Therefore, as AFA we find that both Lloyds and Zenith used and benefitted from this program within the meaning of section 771(5)(E) of the Act.

For this program, we are assigning a net subsidy rate of 16.63 percent *ad valorem,* which corresponds to the highest above *de minimis* subsidy rate calculated for the same program in any segment of any proceeding involving India. *See Final Affirmative Countervailing Duty Determination: Certain Hot-Rolled Carbon Steel Flat Products From India,* 66 FR 49635 (September 28, 2001), and accompanying Issues and Decision Memorandum (''*HRS Investigation Decision Memorandum*'') at the ''Export Promotion for Capital Goods (EPCGS) Scheme'' section.

C. Duty Exemption/Remission Schemes

1. Advance License Program

The GOI reported that ''{a}n Advance Authorization is issued to allow duty free import of inputs, which are physically incorporated in export product (making normal allowance for wastage). In addition, fuel, oil, energy, catalysts which are consumed/utilized to obtain export product, may also be allowed.'' *See* GQR at 45. Accordingly, we preliminarily determine that this program provides a financial contribution in the form of revenue forgone within the meaning of section 771(5)(D)(ii) of the Act. The GOI also reported that ''{d}uty free import of mandatory spares up to 10% of CIF value of Authorization which are required to be exported/supplied with resultant product are allowed under Advance Authorization.'' *See* GQR at 26. Accordingly, we preliminarily determine that this program is contingent upon export and, therefore, is specific within the meaning of section 771(5A)(B) of the Act.

The GOI initially claimed that the respondents had not availed themselves of any benefits under this program. *See* GQR at 47. Zenith reported that it used this program. *See* ZQR at 12–14.[7] However, for Zenith, we cannot determine the level of benefit within the meaning of section 771(5)(E) of the Act because Zenith did not report necessary information for its cross-owned companies.

Absent the cooperation of Lloyds and Zenith with respect to its cross-owned companies, we preliminarily determine that the respondents' submissions do not constitute complete and verifiable evidence, within the meaning of sections 782(e)(3) and (2) of the Act, respectively, demonstrating that the respondents or any of their cross-owned affiliates did not benefit from this program during the POI. Therefore, we find that Zenith and Lloyds used and benefitted from this program within the meaning of section 771(5)(E) of the Act.

For this program, we are assigning a net subsidy rate of 0.50 percent *ad valorem,* which corresponds to the highest above *de minimis* subsidy rate calculated for the same program in any segment of any proceeding involving India. *See Certain Hot-Rolled Carbon Steel Flat Products From India: Final Results of Countervailing Duty Administrative Review,* 73 FR 40295 (July 14, 2008) (''*Fourth HRS Review*'') and accompanying Issues and Decision Memorandum (''*Fourth HRS Review Decision Memorandum*'') at the ''Advance License Program (ALP)'' section.

2. Duty Free Import Authorization Scheme

The GOI reported that ''DFIA is issued to allow duty free import of inputs, fuel, oil, energy sources, catalyst which are required for production of export product.'' *See* GQR at 46. Accordingly, we preliminarily determine that this program provides a financial contribution in the form of revenue forgone within the meaning of section 771(5)(D)(ii) of the Act. Moreover, because this program is limited to exports, we preliminarily determine that this program is contingent upon export and, therefore, is specific within the meaning of section 771(5A)(B) of the Act.

Absent the cooperation of Lloyds and Zenith (including its cross-owned companies), we preliminarily determine that the respondents' submissions do not constitute complete and verifiable evidence, within the meaning of sections 782(e)(3) and (2) of the Act, respectively, demonstrating that the respondents or any of their cross-owned affiliates did not benefit from this program during the POI. Therefore, as AFA we find that both Lloyds and Zenith used and benefitted from this program within the meaning of section 771(5)(E) of the Act.

For this program, we are assigning a net subsidy rate of 0.50 percent *ad valorem,* which corresponds to the highest above *de minimis* subsidy rate calculated for a similar program in any segment of any proceeding involving India. *See Fourth HRS Review Decision Memorandum* at the ''Advance License Program (ALP)'' section.

3. Duty Entitlement Passbook (''DEP'') Scheme

The GOI reported that the ''{o}bjective of DEPB is to neutralize incidence of customs duty on import content of export product.'' *See* GQR at 46. Under this program, exporting companies earn import duty exemptions in the form of passbook credits rather than cash. All exporters are eligible to earn DEP credits on a post-export basis. DEP credits can be applied to subsequent imports of any materials, regardless of whether they are consumed in the production of an exported product. Accordingly, we preliminarily determine that this

[7] The GOI subsequently acknowledged that Zenith used Advanced Authorization licenses during the POI that were issued before the POI. *See* G1SR at response to Question 18.

program provides a financial contribution in the form of revenue forgone within the meaning of section 771(5)(D)(ii) of the Act. Moreover, because this program is limited to export product, we determine that this program is contingent upon export and, therefore, is specific within the meaning of section 771(5A)(B) of the Act.

Zenith reported that it used this program. *See* ZQR at 15–17. However, for Zenith, we cannot determine the level of benefit within the meaning of section 771(5)(E) of the Act because Zenith did not report necessary information for its cross-owned companies.

Absent the cooperation of Lloyds and Zenith with respect to its cross-owned companies, we preliminarily determine that the respondents' submissions do not constitute complete and verifiable evidence, within the meaning of sections 782(e)(3) and (2) of the Act, respectively, demonstrating that the respondents or any of their cross-owned affiliates did not benefit from this program during the POI. Therefore, we find that Zenith and Lloyds used and benefitted from this program within the meaning of section 771(5)(E) of the Act.

For this program, we are assigning a net subsidy rate of 14.61 percent *ad valorem,* which corresponds to the highest above *de minimis* subsidy rate calculated for the same program in any segment of any proceeding involving India. *See PET Film Investigation Decision Memorandum* at the ''DEPS'' section.

D. Pre-Shipment and Post-Shipment Export Financing

The GOI reported that the Reserve Bank of India ''sets the ceiling interest rate that banks may charge under the Preshipment Export Financing Scheme through circulars that are issued periodically.'' *See* GQR at 55. Accordingly, we preliminarily determine that the GOI's issuance of financing at preferential rates constituted a financial contribution pursuant to section 771(5)(D)(i) of the Act. The GOI also reported that ''{e}ligibility for export finance is contingent upon export performance.'' *See* GQR at 56. Accordingly, we preliminarily determine that this program is contingent upon export and, therefore, is specific within the meaning of section 771(5A)(B) of the Act.

Zenith reported that it used this program. *See* ZQR at 17–19. However, for Zenith, we cannot determine the level of benefit within the meaning of section 771(5)(E) of the Act because Zenith did not report necessary information for its cross-owned companies.

Absent the cooperation of Lloyds and Zenith with respect to its cross-owned companies, we preliminarily determine that the respondents' submissions do not constitute complete and verifiable evidence, within the meaning of sections 782(e)(3) and (2) of the Act, respectively, demonstrating that the respondents or any of their cross-owned affiliates did not benefit from this program during the POI. Therefore, we find that Zenith and Lloyds used and benefitted from this program within the meaning of section 771(5)(E) of the Act.

For this program, we are assigning a net subsidy rate of 2.90 percent *ad valorem,* which corresponds to the highest above *de minimis* subsidy rate calculated for the same program in any segment of any proceeding involving India. *See PET Film Investigation Decision Memorandum* at the ''Pre-Shipment and Post-Shipment Export Financing'' section.

E. Market Development Assistance

The GOI reported that ''{r}ecognised Export Promotion Councils (EPCs) on product grouping basis, Commodity Boards and Export Development Authorities are eligible for MDA assistance for development and promotional activities to promote exports of their products and commodities from India. All exporters are eligible for assistance under MDA scheme for bonafide overseas marketing promotion activities to explore new markets for export of their specific product(s) and commodities from India in the initial phase through activities like participation in trade fairs/exhibitions/BSMs/Trade Delegations and publicity through printed material abroad.'' *See* GQR at 63. Accordingly, we preliminarily determine that this program provides a direct financial contribution within the meaning of section 771(5)(D)(i) of the Act. Moreover, because this program is limited to exporters, we determine that this program is contingent upon export and, therefore, is specific within the meaning of section 771(5A)(B) of the Act.

Zenith reported that it used this program. *See* Z2SR at 10. However, for Zenith, we cannot determine the level of benefit within the meaning of section 771(5)(E) of the Act because Zenith did not report necessary information for its cross-owned companies.

Absent the cooperation of Lloyds and Zenith with respect to its cross-owned companies, we preliminarily determine that the respondents' submissions do not constitute complete and verifiable evidence, within the meaning of sections 782(e)(3) and (2) of the Act, respectively, demonstrating that the respondents or any of their cross-owned affiliates did not benefit from this program during the POI. Therefore, we find that Zenith and Lloyds used and benefitted from this program within the meaning of section 771(5)(E) of the Act.

For this program, we are assigning a net subsidy rate of 6.06 percent *ad valorem,* which corresponds to the highest above *de minimis* subsidy rate calculated for a similar program in any segment of any proceeding involving India. *See HRS Investigation Decision Memorandum* at the ''The GOI's Forgiveness of SDF Loans Issued to SAIL'' section.

F. Market Access Initiative

The GOI reported that ''Market Access Initiatives (MAI) Scheme is an Export Promotion Scheme envisaged to act as a catalyst to promote India's export on a sustained basis. The scheme is formulated on focus product-focus country approach to evolve specific market and specific product through market studies/survey. Assistance would be provided to Export Promotion Organizations/Trade Promotion Organizations/National Level Institutions/Research Institutions/Universities/Laboratories, Exporters, etc., for enhancement of export through accessing new markets or through increasing the share in the existing markets.'' *See* GQR at 70. Accordingly, we preliminarily determine that this program provides a direct financial contribution within the meaning of section 771(5)(D)(i) of the Act. Moreover, because this program is limited to exporters, we preliminarily determine that this program is contingent upon export and, therefore, is specific within the meaning of section 771(5A)(B) of the Act.

Absent the cooperation of Lloyds and Zenith, including its cross-owned companies, we preliminarily determine that the respondents' submissions do not constitute complete and verifiable evidence, within the meaning of sections 782(e)(3) and (2) of the Act, respectively, demonstrating that the respondents or any of their cross-owned affiliates did not benefit from this program during the POI. Therefore, as AFA we find that both Lloyds and Zenith used and benefitted from this program within the meaning of section 771(5)(E) of the Act.

For this program, we are assigning a net subsidy rate of 6.06 percent *ad valorem,* which corresponds to the highest above *de minimis* subsidy rate calculated for a similar program in any

segment of any proceeding involving India. *See HRS Investigation Decision Memorandum* at the ''The GOI's Forgiveness of SDF Loans Issued to SAIL'' section.

G. Government of India Loan Guarantees

The GOI did not respond to our requests for information with respect to this program. The Department has previously determined that this program is countervailable. *See, e.g., Certain Hot-Rolled Carbon Steel Flat Products From India: Final Results of Countervailing Duty Administrative Review,* 75 FR 43488 (July 26, 2010) (''Sixth HRS Review''), and accompanying Issues and Decision Memorandum (''*Sixth HRS Review Decision Memorandum*''). Specifically, the Department determined that the GOI's loan guarantees under this program provide a financial contribution in the form of a potential direct transfer of funds or liabilities and are specific to a limited number of industries within the meaning of sections 771(5)(D)(i) and 771(5A)(D)(iii)(I) of the Act, respectively. *Id.* No new information or evidence of changed circumstances has been provided with respect to this program. Therefore, as AFA, we find this program to be countervailable.

Absent the cooperation of Lloyds and Zenith, including its cross-owned companies, we preliminarily determine that the respondents' submissions do not constitute complete and verifiable evidence, within the meaning of sections 782(e)(3) and (2) of the Act, respectively, demonstrating that the respondents or any of their cross-owned affiliates did not benefit from this program during the POI. Therefore, as AFA we find that both Lloyds and Zenith used and benefitted from this program within the meaning of section 771(5)(E) of the Act.

For this program, we are assigning a net subsidy rate of 2.90 percent *ad valorem,* which corresponds to the highest above *de minimis* subsidy rate calculated for a similar program in any segment of any proceeding involving India. *See PET Film Investigation Decision Memorandum* at the ''Pre-Shipment and Post-Shipment Export Financing'' section.

H. Status Certificate Program

The GOI reported that ''{t}he objective of the scheme is to recognize established exporters as Export House, Trading House, Star Trading House and Super Star Trading House with a view to building marketing infrastructure and expertise required for export promotion,'' and that ''{t}he amount of the assistance provided is determined solely by established criteria found in the law, regulation or other official document.'' *See* GQR at 81 and 85, respectively. Accordingly, we preliminarily determine that this program provides a direct financial contribution within the meaning of section 771(5)(D)(i) of the Act. The GOI also reported that ''{t}he eligibility criterion for such recognition shall be on the basis of the FOB/NFE value of export of goods and services.'' *See* GQR at 81. Accordingly, we preliminarily determine that this program is contingent upon export and, therefore, is specific within the meaning of section 771(5A)(B) of the Act.

Zenith reported that it used this program. *See* Z2SR at 11. However, for Zenith, we cannot determine the level of benefit within the meaning of section 771(5)(E) of the Act because Zenith did not report necessary information for its cross-owned companies.

Absent the cooperation of Lloyds and Zenith with respect to its cross-owned companies, we preliminarily determine that the respondents' submissions do not constitute complete and verifiable evidence, within the meaning of sections 782(e)(3) and (2) of the Act, respectively, demonstrating that the respondents or any of their cross-owned affiliates did not benefit from this program during the POI. Therefore, we find that Zenith and Lloyds used and benefitted from this program within the meaning of section 771(5)(E) of the Act.

For this program, we are assigning a net subsidy rate of 2.90 percent *ad valorem,* which corresponds to the highest above *de minimis* subsidy rate calculated for a similar program in any segment of any proceeding involving India. *See PET Film Investigation Decision Memorandum* at the ''Pre-Shipment and Post-Shipment Export Financing'' section.

I. Steel Development Fund Loans

The GOI reported that ''Steel Development Fund (SDF) was created in 1978 to add an element to the ex-works prices of the main producers'' and that ''{t}his fund thus provides financial assistance to the industry from the interest of SDF corpus for taking up projects like, technology upgradation, measures connected with pollution control, activities related to Research & Development.'' *See* GQR at 81 and 85, respectively. Accordingly, we preliminarily determine that the GOI's provision of Steel Development Fund loans under this program provide a financial contribution in the form of a direct transfer of funds within the meaning of section 771(5)(D)(i) of the Act. Moreover, because this program is limited to a single industry, we preliminarily find it to be specific within the meaning of section 771(5A)(D)(iii)(I) of the Act.

Absent the cooperation of Lloyds and Zenith (including its cross-owned companies), we preliminarily determine that the respondents' submissions do not constitute complete and verifiable evidence, within the meaning of sections 782(e)(3) and (2) of the Act, respectively, demonstrating that the respondents or any of their cross-owned affiliates did not benefit from this program during the POI. Therefore, as AFA we find that both Lloyds and Zenith used and benefitted from this program within the meaning of section 771(5)(E) of the Act.

For this program, we are assigning a net subsidy rate of 0.99 percent *ad valorem,* which corresponds to the highest above *de minimis* subsidy rate calculated for the same program in any segment of any proceeding involving India. *See HRS Investigation Decision Memorandum* at ''Loan from the Steel Development Fund (SDF) Fund'' section.

J. Research and Technology Scheme Under Empowered Committee Mechanism With Steel Development Fund Support

The GOI did not respond to our requests for information with respect to this program. According to Petitioners' allegation, the GOI has set aside certain funds, from the interest proceeds of the Steel Development Fund loans to be used for the financing of research and development proposals received from the iron and steel industry and that the assistance is likely in the form of grants or loans. Based on the description alleged in the petition, as AFA, we determine that this program provides a financial contribution in the form of a direct transfer of funds within the meaning of section 771(5)(D)(i) of the Act. In addition, as AFA, we determine that this program is specific to an industry within the meaning of section 771(5A)(D)(iii)(I) of the Act.

Absent the cooperation of Lloyds and Zenith (including its cross-owned companies), we preliminarily determine that the respondents' submissions do not constitute complete and verifiable evidence, within the meaning of sections 782(e)(3) and (2) of the Act, respectively, demonstrating that the respondents or any of their cross-owned affiliates did not benefit from this program during the POI. Therefore, as AFA we find that both Lloyds and Zenith used and benefitted from this

program within the meaning of section 771(5)(E) of the Act.

For this program, we are assigning a net subsidy rate of 0.99 percent *ad valorem,* which corresponds to the highest above *de minimis* subsidy rate calculated for a similar program in any segment of any proceeding involving India. *See HRS Investigation Decision Memorandum* at ''Loan from the Steel Development Fund (SDF) Fund'' section.

K. Special Economic Zones (''SEZ'') Programs

1. Duty-Free Importation of Capital Goods and Raw Materials, Components, Consumables, Intermediates, Spare Parts and Packing Material

The GOI did not respond to our requests for information with respect to this program. The Department has previously determined that this program is countervailable. *See Polyethylene Terephthalate Film, Sheet, and Strip From India: Final Results of Countervailing Duty New Shipper Review,* 76 FR 30910 (May 27, 2011) (''*PET Film NSR*'') and accompanying Issues and Decision Memorandum (''*PET Film NSR Decision Memorandum*''). Specifically, the Department determined that this program provides a financial contribution pursuant to section 771(5)(D)(ii) of the Act through the foregoing of duty payments. *Id.* The Department also determined that program is specific within the meaning of sections 771(5A)(A) and (B) of the Act. *Id.* No new information or evidence of changed circumstances has been provided with respect to this program. Therefore, as AFA, we find this program to be countervailable.

Absent the cooperation of Lloyds and Zenith (including its cross-owned companies), we preliminarily determine that the respondents' submissions do not constitute complete and verifiable evidence, within the meaning of sections 782(e)(3) and (2) of the Act, respectively, demonstrating that the respondents or any of their cross-owned affiliates did not benefit from this program during the POI. Therefore, as AFA we find that both Lloyds and Zenith used and benefitted from this program within the meaning of section 771(5)(E) of the Act.

For this program, we are assigning a net subsidy rate of 14.61 percent *ad valorem,* which corresponds to the highest above *de minimis* subsidy rate calculated for a similar program in any segment of any proceeding involving India. *See PET Film Investigation Decision Memorandum* at the ''DEPS'' section.

2. Exemption From Payment of CST on Purchases of Capital Goods and Raw Materials, Components, Consumables, Intermediates, Spare Parts and Packing Material

The GOI did not respond to our requests for information with respect to this program. The Department has previously determined that this program is countervailable. *See, e.g., Sixth HRS Review and Sixth HRS Review Memorandum.* Specifically, the Department determined that this program provides a financial contribution that is specific within the meaning of sections 771(5)(D) and 771(5A)(B) of the Act, respectively. *Id.* No new information or evidence of changed circumstances has been provided with respect to this program. Therefore, as AFA, we find this program to be countervailable.

Absent the cooperation of Lloyds and Zenith (including its cross-owned companies), we preliminarily determine that the respondents' submissions do not constitute complete and verifiable evidence, within the meaning of sections 782(e)(3) and (2) of the Act, respectively, demonstrating that the respondents or any of their cross-owned affiliates did not benefit from this program during the POI. Therefore, as AFA we find that both Lloyds and Zenith used and benefitted from this program within the meaning of section 771(5)(E) of the Act.

For this program, we are assigning a net subsidy rate of 0.53 percent *ad valorem,* which corresponds to the highest above *de minimis* subsidy rate calculated for the same program in any segment of any proceeding involving India. *See Pet Film NSR Decision Memorandum* at ''Exemption from Payment of Central Sales Tax (CST) on Purchases of Capital Goods and Raw Materials, Components, Consumables, Intermediates, Spare Parts and Packing Material'' section.

3. Exemption From Electricity Duty and Cess Thereon on the Sale or Supply to the SEZ Unit

The GOI did not respond to our requests for information with respect to this program. The Department has previously determined that this program is countervailable. *See PET Film NSR and PET Film NSR Decision Memorandum.* Specifically, the Department determined that the electricity duty and cess exemptions provide a financial contribution in the form of revenue foregone by the State Government of Madhya Pradesh pursuant to section 771(5)(D)(ii) of the Act. *Id.* The Department also determined that program is specific within the meaning of sections 771(5A)(A) and (B) of the Act. *Id.* No new information or evidence of changed circumstances has been provided with respect to this program. Therefore, as AFA, we find this program to be countervailable.

Absent the cooperation of Lloyds and Zenith (including its cross-owned companies), we preliminarily determine that the respondents' submissions do not constitute complete and verifiable evidence, within the meaning of sections 782(e)(3) and (2) of the Act, respectively, demonstrating that the respondents or any of their cross-owned affiliates did not benefit from this program during the POI. Therefore, as AFA we find that both Lloyds and Zenith used and benefitted from this program within the meaning of section 771(5)(E) of the Act.

For this program, we are assigning a net subsidy rate of 3.09 percent *ad valorem,* which corresponds to the highest above *de minimis* subsidy rate calculated for a similar program in any segment of any proceeding involving India. *See Second HRS Review Decision Memorandum* at the ''State Government of Gujarat (SGOG) Tax Incentives'' section.

4. SEZ Income Tax Exemption Scheme (Section l0A)

The GOI did not respond to our requests for information with respect to this program. The Department has previously determined that this program is countervailable. *See PET Film NSR and PET Film NSR Decision Memorandum.* Specifically, the Department determined that the GOI provides a financial contribution in the form of revenue forgone pursuant to section 771(5)(D)(ii) of the Act. *Id.* The Department also determined that program is specific within the meaning of sections 771(5A)(A) and (B) of the Act. *Id.* No new information or evidence of changed circumstances has been provided with respect to this program. Therefore, as AFA, we preliminarily find this program to be countervailable.

Absent the cooperation of Lloyds and Zenith (including its cross-owned companies), we preliminarily determine that the respondents' submissions do not constitute complete and verifiable evidence, within the meaning of sections 782(e)(3) and (2) of the Act, respectively, demonstrating that the respondents or any of their cross-owned affiliates did not benefit from this program during the POI. Therefore, as AFA we find that both Lloyds and

Zenith used and benefitted from this program within the meaning of section 771(5)(E) of the Act.

As explained above, for the alleged income tax programs pertaining to either the reduction of the income tax rates or the payment of no income tax, we are applying the 35 percent AFA rate on a combined basis (*i.e.*, the income tax programs combined provided a 35 percent benefit).

5A. Discounted Land and Related Fees in an SEZ

The GOI did not respond to our requests for information with respect to this program. The Department has previously countervailed discounted land fees in the state of Madhya Pradesh. *See PET Film NSR* and *PET Film NSR Decision Memorandum.* Specifically, the Department determined that the State Government of the State of Madhya Pradesh provides a financial contribution in the form of revenue forgone pursuant to section 771(5)(D)(ii) of the Act. *Id.* The Department also determined that program is specific within the meaning of sections 771(5A)(A) and (B) of the Act. *Id.* No new information or evidence of changed circumstances has been provided with respect to this program. Therefore, as AFA, we find this program to be countervailable.

Absent the cooperation of Lloyds and Zenith (including its cross-owned companies), we preliminarily determine that the respondents' submissions do not constitute complete and verifiable evidence, within the meaning of sections 782(e)(3) and (2) of the Act, respectively, demonstrating that the respondents or any of their cross-owned affiliates did not benefit from this program during the POI. Therefore, as AFA we find that both Lloyds and Zenith used and benefitted from this program within the meaning of section 771(5)(E) of the Act.

For this program, we are assigning a net subsidy rate of 3.09 percent *ad valorem,* which corresponds to the highest above *de minimis* subsidy rate calculated for a similar program in any segment of any proceeding involving India. *See Second HRS Review Decision Memorandum* at the ''State Government of Gujarat (SGOG) Tax Incentives'' section

5B. Land Provided at LTAR in an SEZ

The GOI did not respond to our requests for information with respect to this program. According to Petitioners' allegation, under the authority of the GOI's Land Act, land is provided at LTAR to investors who locate in the SEZs. Based on the description alleged in the petition, as AFA, we determine that this program provides a financial contribution in the form of land sold for LTAR within the meaning of section 771(5)(D)(iii) of the Act. In addition, as AFA, we determine that this program is specific within the meaning of sections 771(5A)(A) and (B) of the Act consistent with the other SEZ programs.

Absent the cooperation of Lloyds and Zenith (including its cross-owned companies), we preliminarily determine that the respondents' submissions do not constitute complete and verifiable evidence, within the meaning of sections 782(e)(3) and (2) of the Act, respectively, demonstrating that the respondents or any of their cross-owned affiliates did not benefit from this program during the POI. Therefore, as AFA we find that both Lloyds and Zenith used and benefitted from this program within the meaning of section 771(5)(E) of the Act.

For this program, we are assigning a net subsidy rate of 18.08 percent *ad valorem,* which corresponds to the highest above *de minimis* subsidy rate calculated for a similar program in any segment of any proceeding involving India. *See Fourth HRS Review Decision Memorandum* at the ''Captive Mining Rights of Iron Ore'' section.

L. Input Programs

1. Provision of Hot-Rolled Steel by the Steel Authority of India for LTAR

The GOI did not respond to our requests for information with respect to this program. According to Petitioners' allegation, the SAIL is a government authority and is likely to supply hot-rolled steel, the primary input in the production of subject merchandise, for LTAR. Based on the description alleged in the petition, as AFA, we determine that this program provides a financial contribution in the form of a provision of a good as defined under section 771(5)(D)(iii) of the Act. In addition, as AFA, we determine that this program is specific within the meaning of section 771(5A)(D)(iii)(I) of the Act because the actual recipients are limited to industries that use hot-rolled steel.

Absent the cooperation of Lloyds and Zenith (including its cross-owned companies), we preliminarily determine that the respondents' submissions do not constitute complete and verifiable evidence, within the meaning of sections 782(e)(3) and (2) of the Act, respectively, demonstrating that the respondents or any of their cross-owned affiliates did not benefit from this program during the POI. Therefore, as AFA we find that both Lloyds and Zenith used and benefitted from this program within the meaning of section 771(5)(E) of the Act.

For this program, we are assigning a net subsidy rate of 16.14 percent *ad valorem,* which corresponds to the highest above *de minimis* subsidy rate calculated for a similar program in any segment of any proceeding involving India. See *Fifth HRS Review Decision Memorandum* at ''Sale of High-Grade Iron Ore for LTAR'' section.

2. Provision of Captive Mining Rights

The GOI did not respond to our requests for information with respect to this program. The Department has previously determined that this program is countervailable. *See, e.g., Sixth HRS Review* and *Sixth HRS Review Memorandum.* Specifically, the Department determined that this program provides a financial contribution in the form of a provision of a good and is specific to a limited number of industries within the meaning of sections 771(5)(D)(iii) and 771(5A)(D)(iii)(I) of the Act, respectively. *Id.* No new information or evidence of changed circumstances has been provided with respect to this program. Therefore, as AFA, we find this program to be countervailable.

Absent the cooperation of Lloyds and Zenith (including its cross-owned companies), we preliminarily determine that the respondents' submissions do not constitute complete and verifiable evidence, within the meaning of sections 782(e)(3) and (2) of the Act, respectively, demonstrating that the respondents or any of their cross-owned affiliates did not benefit from this program during the POI. Therefore, as AFA we find that both Lloyds and Zenith used and benefitted from this program within the meaning of section 771(5)(E) of the Act.

For this program, we are assigning a net subsidy rate of 18.08 percent *ad valorem,* which corresponds to the highest above *de minimis* subsidy rate calculated for a similar program in any segment of any proceeding involving India. *See Fourth HRS Decision Memorandum* at the ''Captive Mining of Iron Ore'' section.

3. Captive Mining Rights of Coal

The GOI did not respond to our requests for information with respect to this program. The Department has previously determined that this program is countervailable. *See, e.g., Sixth HRS Review* and *Sixth HRS Review Memorandum.* Specifically, the Department determined that this program provides a financial contribution in the form of a provision of a good and is specific to a limited

number of industries within the meaning of sections 771(5)(D)(iii) and 771(5A)(D)(iii)(I) of the Act, respectively. *Id.* No new information or evidence of changed circumstances has been provided with respect to this program. Therefore, we continue to find this program to be countervailable.

Absent the cooperation of Lloyds and Zenith (including its cross-owned companies), we preliminarily determine that the respondents' submissions do not constitute complete and verifiable evidence, within the meaning of sections 782(e)(3) and (2) of the Act, respectively, demonstrating that the respondents or any of their cross-owned affiliates did not benefit from this program during the POI. Therefore, as AFA we find that both Lloyds and Zenith used and benefitted from this program within the meaning of section 771(5)(E) of the Act.

For this program, we are assigning a net subsidy rate of 3.09 percent *ad valorem,* which corresponds to the highest above *de minimis* subsidy rate calculated for the same program in any segment of any proceeding involving India. *See Fourth HRS Decision Memorandum* at ''Captive Mining Rights of Coal'' section.

4. Provision of High-Grade Ore for LTAR

The GOI did not respond to our requests for information with respect to this program. The Department has previously determined that this program is countervailable. *See, e.g., Sixth HRS Review* and *Sixth HRS Review Memorandum.* Specifically, the Department determined that the GOI continues to provide a direct financial contribution in the form of a provision of a good as defined under section 771(5)(D)(iii) of the Act, which is specific within the meaning of section 771(5A)(D)(iii)(I) of the Act because the actual recipients are limited to industries that use iron ore, including the steel industry. *Id.* No new information or evidence of changed circumstances has been provided with respect to this program. Therefore, as AFA, we find this program to be countervailable.

Absent the cooperation of Lloyds and Zenith (including its cross-owned companies), we preliminarily determine that the respondents' submissions do not constitute complete and verifiable evidence, within the meaning of sections 782(e)(3) and (2) of the Act, respectively, demonstrating that the respondents or any of their cross-owned affiliates did not benefit from this program during the POI. Therefore, as AFA we find that both Lloyds and Zenith used and benefitted from this program within the meaning of section 771(5)(E) of the Act.

For this program, we are assigning a net subsidy rate of 16.14 percent *ad valorem,* which corresponds to the highest above *de minimis* subsidy rate calculated for the same program in any segment of any proceeding involving India. *See Fifth HRS Decision Memorandum* at ''Sale of High-Grade Iron Ore for Less Than Adequate Remuneration'' section.

M. State Government of Maharashtra (''SGOM'') Programs

1. Sales Tax Program

The GOI did not respond to our requests for information with respect to this program. The Department has previously determined that this program is countervailable. *See, e.g., Sixth HRS Review* and *Sixth HRS Review Memorandum.* Specifically, the Department determined that this program provides a financial contribution in the form of revenue forgone and is specific because it is limited to only those companies investing in a specified developing area within the meaning of sections 771(5)(D)(ii) and 771(5A)(D)(iv) of the Act, respectively. *Id.* No new information or evidence of changed circumstances has been provided with respect to this program. Therefore, as AFA, we find this program to be countervailable.

Zenith reported that it ''availed sales tax deferred payment loan facility from State Government of Maharashtra before the POI.'' *See* ZQR at 32. However, for Zenith, we cannot determine the level of benefit within the meaning of section 771(5)(E) of the Act because Zenith did not report necessary information for its cross-owned companies.

Absent the cooperation of Lloyds and Zenith with respect to its cross-owned companies, we preliminarily determine that the respondents' submissions do not constitute complete and verifiable evidence, within the meaning of sections 782(e)(3) and (2) of the Act, respectively, demonstrating that the respondents or any of their cross-owned affiliates did not benefit from this program during the POI. Therefore, as AFA we find that both Lloyds and Zenith used and benefitted from this program within the meaning of section 771(5)(E) of the Act.

For this program, we are assigning a net subsidy rate of 0.59 percent *ad valorem,* which corresponds to the highest above *de minimis* subsidy rate calculated for the same program in any segment of any proceeding involving India. *See Fourth HRS Review Decision Memorandum* at ''State Government of Maharashtra (SGOM) Programs Sales Tax Program'' section.

2. VAT Refunds Under SGOM Package Scheme

The GOI reported that ''Any industry new or expansion fulfilling the eligibility criteria (Para 3.5, 3.6 & 3.10 of the Scheme) are granted incentives in accordance with the classification of the block/taluka in which it is located.'' *See* GQR at 113. Under the Maharashtra Package Scheme of Incentives and the Maharashtra New Package Scheme of Incentives, the SGOM offered tax incentives including VAT tax refunds to companies that are located or invested in certain developing areas in the State of Maharashtra. Accordingly, we preliminarily determine that this program provides a financial contribution in the form of revenue forgone within the meaning of section 771(5)(D)(ii) of the Act. The GOI also reported that ''{t}he main objective of the Scheme is to encourage dispersal of industries to the industrially less developed areas of the State so as to achieve higher and sustainable economic development with balance regional development. The talukas/blocks in the State are classified in to {*sic*} six (06) zones depending up on their industrial backwardness. The graded scale of incentives are offered to the industrial units being set up in such backward areas with a view to compensate their difficulties faced by them on account of gap in infrastructure facilities vis-a-vis the developed areas of the State.'' *See* GQR at 111. Accordingly, we preliminarily determine that this program is limited to only those companies investing in a specified developing area and, therefore, is specific within the meaning of section 771(5A)(D)(iv) of the Act.

Absent the cooperation of Lloyds and Zenith (including its cross-owned companies), we preliminarily determine that the respondents' submissions do not constitute complete and verifiable evidence, within the meaning of sections 782(e)(3) and (2) of the Act, respectively, demonstrating that the respondents or any of their cross-owned affiliates did not benefit from this program during the POI. Therefore, as AFA we find that both Lloyds and Zenith used and benefitted from this program within the meaning of section 771(5)(E) of the Act.

For this program, we are assigning a net subsidy rate of 3.09 percent *ad valorem,* which corresponds to the highest above *de minimis* subsidy rate calculated for a similar program in any

segment of any proceeding involving India. *See Second HRS Review Decision Memorandum* at the ''State Government of Gujarat (SGOG) Tax Incentives'' section.

3. Electricity Duty Scheme Under Package Scheme Incentives 1993

The GOI did not respond to our requests for information with respect to this program. The Department has previously determined that this program is countervailable. *See, e.g., Sixth HRS Review* and *Sixth HRS Review Memorandum.* Specifically, the Department determined that this program provides a financial contribution in the form of revenue forgone and are regionally specific within the meaning of sections 771(5)(D)(iii) and 771(5A)(D)(iv) of the Act, respectively. *Id.* No new information or evidence of changed circumstances has been provided with respect to this program. Therefore, as AFA, we find this program to be countervailable.

Absent the cooperation of Lloyds and Zenith (including its cross-owned companies), we preliminarily determine that the respondents' submissions do not constitute complete and verifiable evidence, within the meaning of sections 782(e)(3) and (2) of the Act, respectively, demonstrating that the respondents or any of their cross-owned affiliates did not benefit from this program during the POI. Therefore, as AFA we find that both Lloyds and Zenith used and benefitted from this program within the meaning of section 771(5)(E) of the Act.

For this program, we are assigning a net subsidy rate of 3.09 percent *ad valorem,* which corresponds to the highest above *de minimis* subsidy rate calculated for a similar program in any segment of any proceeding involving India. *See Second HRS Review Decision Memorandum* at the ''State Government of Gujarat (SGOG) Tax Incentives'' section.

4. Octroi Refunds

The GOI did not respond to our requests for information with respect to this program. The Department has previously determined that this program is countervailable. *See, e.g., Sixth HRS Review* and *Sixth HRS Review Memorandum.* Specifically, the Department determined that the indirect tax savings under this program provide a financial contribution in the form of revenue forgone and are regionally specific within the meaning of sections 771(5)(D)(i) and 771(5A)(D)(iv) of the Act, respectively. *Id.* No new information or evidence of changed circumstances has been provided with respect to this program. Therefore, as AFA, we find this program to be countervailable.

Absent the cooperation of Lloyds and Zenith (including its cross-owned companies), we preliminarily determine that the respondents' submissions do not constitute complete and verifiable evidence, within the meaning of sections 782(e)(3) and (2) of the Act, respectively, demonstrating that the respondents or any of their cross-owned affiliates did not benefit from this program during the POI. Therefore, as AFA we find that both Lloyds and Zenith used and benefitted from this program within the meaning of section 771(5)(E) of the Act.

For this program, we are assigning a net subsidy rate of 3.09 percent *ad valorem,* which corresponds to the highest above *de minimis* subsidy rate calculated for a similar program in any segment of any proceeding involving India. *See Second HRS Review Decision Memorandum* at the ''State Government of Gujarat (SGOG) Tax Incentives'' section.

5. Octroi Loan Guarantees

The GOI did not respond to our requests for information with respect to this program. The Department has previously determined that this program is countervailable. *See, e.g., Sixth HRS Review* and *Sixth HRS Review Memorandum.* Specifically, the Department determined the SGOM's loan guarantees under this program provide a financial contribution within the meaning of section 771(5)(D)(i) of the Act through a potential direct transfer of the Octroi refund to pay off loans. *Id.* The Department also found that these loan guarantees are specific within the meaning of 771(5A)(D)(iii)(I) of the Act because only companies eligible for the Octroi scheme can receive these loan guarantees. *Id.* No new information or evidence of changed circumstances has been provided with respect to this program. Therefore, as AFA, we find this program to be countervailable.

Absent the cooperation of Lloyds and Zenith (including its cross-owned companies), we preliminarily determine that the respondents' submissions do not constitute complete and verifiable evidence, within the meaning of sections 782(e)(3) and (2) of the Act, respectively, demonstrating that the respondents or any of their cross-owned affiliates did not benefit from this program during the POI. Therefore, as AFA we find that both Lloyds and Zenith used and benefitted from this program within the meaning of section 771(5)(E) of the Act.

For this program, we are assigning a net subsidy rate of 2.90 percent *ad valorem,* which corresponds to the highest above *de minimis* subsidy rate calculated for a similar program in any segment of any proceeding involving India. *See PET Film Investigation Decision Memorandum* at the ''Pre-Shipment and Post-Shipment Export Financing'' section.

6. Infrastructure Assistance for Mega Projects

The GOI did not respond to our requests for information with respect to this program. The Department has previously determined that this program is countervailable. *See, e.g., Sixth HRS Review* and *Sixth HRS Review Memorandum.* Specifically, the Department determined that the program constituted a financial contribution in the form of a direct transfer of funds within the meaning of section 771(5)(D)(i) of the Act. *Id.* The Department also found that the program is limited to firms investing in Mega-Projects and, therefore, is specific within the meaning of section 771(5A)(D)(i) of the Act. Id. No new information or evidence of changed circumstances has been provided with respect to this program. Therefore, as AFA, we find this program to be countervailable.

Absent the cooperation of Lloyds and Zenith (including its cross-owned companies), we preliminarily determine that the respondents' submissions do not constitute complete and verifiable evidence, within the meaning of sections 782(e)(3) and (2) of the Act, respectively, demonstrating that the respondents or any of their cross-owned affiliates did not benefit from this program during the POI. Therefore, as AFA we find that both Lloyds and Zenith used and benefitted from this program within the meaning of section 771(5)(E) of the Act.

For this program, we are assigning net subsidy rates of 3.09 percent *ad valorem* for indirect tax and 6.06 for grants percent *ad valorem,* which correspond to the highest above *de minimis* subsidy rates calculated for similar programs in another segment of this proceeding. *See Second HRS Review Decision Memorandum* at the ''State Government of Gujarat (SGOG) Tax Incentives'' section and HRS Investigation Decision Memorandum at the ''The GOI's Forgiveness of SDF Loans to SAIL'' section.

7. Provision of Land for LTAR

The GOI did not respond to our requests for information with respect to this program. The Department has previously determined that this program is countervailable. *See, e.g., Sixth HRS Review* and *Sixth HRS Review Memorandum.* Specifically, the Department determined that this program constitutes a financial contribution in the form of land sold for LTAR within the meaning of section 771(5)(D)(iii) of the Act. *Id.* The Department also found that the program is limited to enterprises purchasing land outside of the Bombay and Pune area, and therefore, is specific within the meaning of section 771(5A)(D)(iv) of the Act. Id. No new information or evidence of changed circumstances has been provided with respect to this program. Therefore, as AFA, we find this program to be countervailable.

Absent the cooperation of Lloyds and Zenith (including its cross-owned companies), we preliminarily determine that the respondents' submissions do not constitute complete and verifiable evidence, within the meaning of sections 782(e)(3) and (2) of the Act, respectively, demonstrating that the respondents or any of their cross-owned affiliates did not benefit from this program during the POI. Therefore, as AFA we find that both Lloyds and Zenith used and benefitted from this program within the meaning of section 771(5)(E) of the Act.

For this program, we are assigning a net subsidy rate of 18.08 percent *ad valorem,* which corresponds to the highest above *de minimis* subsidy rate calculated for a similar program in any segment of any proceeding involving India. *See Fourth HRS Review Decision Memorandum* at ''Captive Mining Rights of Iron Ore'' section.

8. Investment Subsidies

The GOI did not respond to our requests for information with respect to this program. The Department has previously determined that this program is countervailable. *See, e.g., Sixth HRS Review* and *Sixth HRS Review Memorandum.* Specifically, the Department determined that this program constitutes a financial contribution in the form of a direct transfer of funds within the meaning of section 771(5)(D)(i) of the Act. *Id.* The Department also found that the program is limited to firms operating outside of the Bombay and Pune metropolitan areas and thus, is specific within the meaning of section 771(5A)(D)(iv) of the Act. *Id.* No new information or evidence of changed circumstances has been provided with respect to this program. Therefore, as AFA, we find this program to be countervailable.

Absent the cooperation of Lloyds and Zenith (including its cross-owned companies), we preliminarily determine that the respondents' submissions do not constitute complete and verifiable evidence, within the meaning of sections 782(e)(3) and (2) of the Act, respectively, demonstrating that the respondents or any of their cross-owned affiliates did not benefit from this program during the POI. Therefore, as AFA we find that both Lloyds and Zenith used and benefitted from this program within the meaning of section 771(5)(E) of the Act.

For this program, we are assigning a net subsidy rate of 6.06 percent *ad valorem,* which corresponds to the highest above *de minimis* subsidy rate calculated for a similar program in any segment of any proceeding involving India. *See HRS Investigation Decision Memorandum* at ''Forgiveness of SDF Loans to SAIL'' section.

N. Waiving of Interest on Loan by the State Industrial and Investment Corporation of Maharashtra Ltd (''SICOM'')

In prior investigations, the Department has determined that SICOM is a public body and found that waived interest on ''intercorporate deposits'' was countervailable. *See PET Film Investigation and PET Film Investigation Decision Memorandum.* Specifically, the Department determined that a financial contribution was provided by SICOM, a public entity, pursuant to section 771(5)(D)(i) of the Act, in the amount of the waived interest. *Id.* The Department also found that the waived interest was specific to the respondent pursuant to section 771(5A)(D)(i) of the Act. *Id.* No new information or evidence of changed circumstances has been provided with respect to this program. Therefore, we find this program to be countervailable.

We initiated an investigation into this program on March 16, 2012. *See* Memorandum to Susan Kuhbach, Director, Office 1, ''Analysis of New Subsidy Allegation,'' dated March 16, 2012. Although we did not send a questionnaire to Zenith on this program prior to this preliminary determination, Zenith's annual reports on the record indicate that Zenith may have benefited from this program during the POI. *See* ZQR at Annexure 3, 2008–2009 Annual Report at 27; and Annexure 4, 2009–2010 Annual Report at 32. Moreover, because of the deficiencies in Zenith's response as a whole, we would be unable to determine what level of benefit Zenith received even if we had a complete questionnaire response on this program from Zenith. For example, as we stated above under the ''Use of Adverse Facts Available'' section, Zenith did not provide necessary information on the sales of any of its cross-owned companies. This information is necessary to determine the level of benefits Zenith may have received under this program.

Therefore, absent the cooperation of Lloyds and Zenith (including its cross-owned companies), we determine that the respondents' submissions do not constitute complete and verifiable evidence, within the meaning of sections 782(e)(3) and (2) of the Act, respectively, demonstrating that the respondents or any of their cross-owned affiliates did not benefit from this program during the POI. Therefore, as AFA we find that both Lloyds and Zenith used and benefitted from this program within the meaning of section 771(5)(E) of the Act.

For this program, we are assigning a net subsidy rate of 2.90 percent *ad valorem,* which corresponds to the highest above *de minimis* subsidy rate calculated for a similar program in any segment of any proceeding involving India. *See PET Film Investigation Decision Memorandum* at the ''Pre-Shipment and Post-Shipment Export Financing'' section.

Summary of Programs Preliminarily Determined To Be Countervailable

As AFA, we are making the adverse inference that Lloyds and Zenith, including their cross-owned companies, each received countervailable subsidies under each of the subsidy programs that the Department included in its initiation as well as the additional subsidy program that the Department initiated on March 16, 2012. Listed below are the AFA rates applicable to each program.

Program	Subsidy rate
A. Export Oriented Unit Schemes:	
1. Duty-free import of all types of goods, including capital goods and raw materials	14.61
2. Reimbursement of Central Sales Tax (''CST'') paid on goods manufactured in India	3.09

Program	Subsidy rate
3. Duty drawback on fuel procured from domestic oil companies	14.61
4. Exemption from income tax under Section l0A and l0B of Income Tax Act	35.00
5. Exemption from payment of Central Excise Duty on goods manufactured in India and procured from a Domestic Tariff Area	14.61
6. Reimbursement of CST on goods manufactured in India and procured from a Domestic Tariff Area	3.09
B. Export Promotion Capital Goods Scheme	16.63
C. Duty Exemption/Remission Schemes:	
1. Advance License Program	2.55
2. Duty Free Import Authorisation Scheme	2.55
3. Duty Entitlement Passbook Scheme	14.61
D. Pre-shipment and Post-shipment Export Financing	2.90
E. Market Development Assistance	6.06
F. Market Access Initiative	6.06
G. Government of India Loan Guarantees	2.90
H. Status Certificate Program	2.90
I. Steel Development Fund Loans	0.99
J. Research and Technology Scheme Under Empowered Committee Mechanism with Steel Development Fund Support	0.99
K. Special Economic Zones (“SEZ”) Programs:	
1. Duty-Free Importation of Capital Goods and Raw Materials, Components, Consumables, Intermediates, Spare Parts and Packing Material	14.61
2. Exemption from Payment of CST on Purchases of Capital Goods and Raw Materials, Components,	3.09
3. Exemption from Electricity Duty and Cess thereon on the Sale or Supply to the SEZ Unit	3.09
4. SEZ Income Tax Exemption Scheme (Section l0A) [8]	
5A. Discounted Land and Related Fees in an SEZ	3.09
5B. Land Provided at Less Than Adequate Remuneration in an SEZ	8.08
L. Input Programs:	
1. Provision of Hot-Rolled Steel by the Steel Authority of India For Less Than Adequate Remuneration (“LTAR”)	16.14
2. Provision of Captive Mining Rights	18.08
3. Captive Mining Rights of Coal	3.09
4. Provision of High-Grade Ore for LTAR	16.14
M. State Government of Maharashtra (“SGOM”) Programs:	
1. Sales Tax Program	0.59
2. Value-Added Tax Refunds under SGOM Package Scheme	3.09
3. Electricity Duty Scheme under Package Scheme Incentives 1993	3.09
4. Octroi Refunds	3.09
5. Octroi Loan Guarantees	2.90
6. Infrastructure Assistance for Mega Projects—indirect tax	3.09
Infrastructure Assistance for Mega Projects—grants	6.06
7. Provision of Land for LTAR	18.08
8. Investment Subsidies	6.06
N. Waiving of Interest on Loan by the State Industrial and Investment Corporation of Maharashtra Ltd (“SICOM”)	2.90

Summarizing these rates yields a total CVD subsidy rate of 285.95 percent *ad valorem.*

Suspension of Liquidation

In accordance with section 703(d)(1)(A)(i) of the Act, we calculated an individual rate for each producer/exporter of the subject merchandise individually investigated.

With respect to the all-others rate, section 705(c)(5)(A)(ii) of the Act provides that if the countervailable subsidy rates established for all exporters and producers individually investigated are determined entirely in accordance with section 776 of the Act, the Department may use any reasonable method to establish an all-others rate for exporters and producers not individually investigated. In this case, the rate calculated for both of the investigated companies is based entirely on facts available under section 776 of the Act. There is no other information on the record upon which to determine an all-others rate. As a result, we have used the AFA rate assigned for Lloyds and Zenith as the all-others rate. This method is consistent with the Department’s past practice. *See, e.g., Final Affirmative Countervailing Duty Determination: Certain Hot-Rolled Carbon Steel Flat Products From Argentina,* 66 FR 37007, 37008 (July 16, 2001); *see also Final Affirmative Countervailing Duty Determination: Prestressed Concrete Steel Wire Strand From India,* 68 FR 68356 (December 8, 2003).

We preliminarily determine the total estimated net countervailable subsidy rates to be:

Exporter/manufacturer	Net subsidy rate
Lloyds Metals and Engineers Ltd	285.95
Zenith Birla Ltd	285.95
All Others	285.95

In accordance with sections 703(d)(1)(B) and (2) of the Act, we are directing CBP to suspend liquidation of all entries of circular welded pipe from India that are entered, or withdrawn from warehouse, for consumption on or after the date of the publication of this notice in the **Federal Register**, and to require a cash deposit or bond for such entries of merchandise in the amounts indicated above.

U.S. International Trade Commission (“ITC”) Notification

In accordance with section 703(f) of the Act, we will notify the ITC of our determination. In addition, we are making available to the ITC all non-privileged and non-proprietary information relating to this

[8] The rate is not separately listed because the maximum benefit for this program and the Exemption from income tax under Section l0A and l0B of Income Tax Act under Export Oriented Unit Schemes is 35 percent. Accordingly, 35 percent is listed under the latter program.

investigation. We will allow the ITC access to all privileged and business proprietary information in our files, provided the ITC confirms that it will not disclose such information, either publicly or under an administrative protective order, without the written consent of the Assistant Secretary for Import Administration.

In accordance with section 705(b)(2) of the Act, if our final determination is affirmative, the ITC will make its final determination within 45 days after the Department makes its final determination.

Disclosure and Public Comment

In accordance with 19 CFR 351.224(b), we will disclose to the parties the calculations for this preliminary determination within five days of our announcement. We intend to release a letter to all interested parties that establishes the deadline for submission of case briefs. See 19 CFR 351.309(c)(i) (for a further discussion of case briefs). Rebuttal briefs must be filed within five days after the deadline for submission of case briefs, pursuant to 19 CFR 351.309(d)(1). A list of authorities relied upon, a table of contents, and an executive summary of issues should accompany any briefs submitted to the Department. Executive summaries should be limited to five pages total, including footnotes. *See* 19 CFR 351.309(c)(2) and (d)(2).

Section 774 of the Act provides that the Department will hold a public hearing to afford interested parties an opportunity to comment on arguments raised in case or rebuttal briefs, provided that such a hearing is requested by an interested party. If a request for a hearing is made in this investigation, the hearing will be held two days after the deadline for submission of the rebuttal briefs, pursuant to 19 CFR 351.310(d), at the U.S. Department of Commerce, 14th Street and Constitution Avenue NW., Washington, DC 20230. Parties should confirm by telephone the time, date, and place of the hearing 48 hours before the scheduled time.

Interested parties who wish to request a hearing, or to participate if one is requested, must electronically submit a written request to the Assistant Secretary for Import Administration using IA ACCESS, within 30 days of the publication of this notice, pursuant to 19 CFR 351.310(c). Requests should contain: (1) The party's name, address, and telephone; (2) the number of participants; and (3) a list of the issues to be discussed. Oral presentations will be limited to issues raised in the briefs. *See id.*

This determination is published pursuant to sections 703(f) and 777(i) of the Act.

Dated: March 26, 2012.

Paul Piquado,

Assistant Secretary for Import Administration.

[FR Doc. 2012–7726 Filed 3–29–12; 8:45 am]

BILLING CODE 3510–DS–P

DEPARTMENT OF COMMERCE

International Trade Administration

[C–552–810]

Circular Welded Carbon-Quality Steel Pipe From the Socialist Republic of Vietnam: Preliminary Affirmative Countervailing Duty Determination and Alignment of Final Countervailing Duty Determination With Final Antidumping Duty Determination

AGENCY: Import Administration, International Trade Administration, Department of Commerce.

SUMMARY: The Department of Commerce preliminarily determines that countervailable subsidies are being provided to producers and exporters of circular welded carbon-quality steel pipe (''circular welded pipe'') from the Socialist Republic of Vietnam (''Vietnam''). For information on the estimated subsidy rates, *see* the ''Suspension of Liquidation'' section of this notice.

DATES: *Effective Date:* March 30, 2012.

FOR FURTHER INFORMATION CONTACT: Austin Redington or Christopher Siepmann, AD/CVD Operations, Office 1, Import Administration, International Trade Administration, U.S. Department of Commerce, 14th Street and Constitution Avenue NW., Washington, DC 20230; telephone: (202) 482–1664 or (202) 482–7958, respectively.

SUPPLEMENTARY INFORMATION:

Petitioners

The petitioners in this investigation are Wheatland Tube, Allied Tube and Conduit, JMC Steel Group, and United States Steel Corporation (collectively, ''Petitioners'').

Case History

The following events have occurred since the publication of the Department of Commerce's (''Department'') notice of initiation in the **Federal Register**. *See Circular Welded Carbon-Quality Steel Pipe From India, the Sultanate of Oman, the United Arab Emirates, and the Socialist Republic of Vietnam: Initiation of Countervailing Duty Investigations,* 76 FR 72173 (November 22, 2011) (''*Initiation Notice*''), and the accompanying Initiation Checklist.

On December 16, 2011, the U.S. International Trade Commission (''ITC'') published its affirmative preliminary determination that there is a reasonable indication that an industry in the United States is materially injured by reason of allegedly subsidized imports of circular welded pipe from India, Oman, the United Arab Emirates, and Vietnam. *See Circular Welded Carbon-Quality Steel Pipe from India, Oman, the United Arab Emirates, and Vietnam*, 76 FR 78313 (December 16, 2011).

The Department released U.S. Customs and Border Protection (''CBP'') entry data for U.S. imports of circular welded pipe from Vietnam between January 1, 2010, and December 31, 2010, to be used as the basis for respondent selection. See Memorandum from Joshua Morris, International Trade Compliance Analyst to the File, ''Release of Customs and Border Protection (''CBP'') Data,'' dated November 22, 2011. The CBP entry data covered products included in this investigation which entered under the Harmonized Tariff Schedule of the United States (''HTSUS'') numbers likely to include subject merchandise: 7306.30.10.00, 7306.30.50.25, 7306.30.50.32, 7306.30.50.40, 7306.30.50.55, 7306.30.50.85, and 7306.30.50.90.

On December 15, 2011, the Department issued its respondent selection analysis. Given available resources, the Department determined it could examine no more than two producers/exporters and selected SeAH Steel VINA Corp. (''SeAH VINA'') and Vietnam Haiphong Hongyuan Machinery Manufactory Co., Ltd. (''Haiphong Hongyuan''). *See* Memorandum from Susan Kuhbach, Office Director, to Christian Marsh, Deputy Assistant Secretary for Antidumping and Countervailing Duty Operations, ''Countervailing Duty Investigation of Circular Welded Carbon-Quality Steel Pipe from the Socialist Republic of Vietnam: Respondent Selection Memorandum,'' dated December 15, 2011. These companies were the two largest producers/exporters of subject merchandise, based on aggregate volume, to the United States.

On December 19, 2011, the Department postponed the deadline for the preliminary determination in this investigation until March 26, 2012. *See Circular Welded Carbon-Quality Steel Pipe from India, the Sultanate of Oman, the United Arab Emirates, and the Socialist Republic of Vietnam: Postponement of Preliminary*

Determinations in the Countervailing Duty Investigations, 76 FR 78615 (December 19, 2011). In conjunction with this postponement, the Department also postponed the deadline for the submission of new subsidy allegations until February 15, 2012. *See* Memorandum to the File from Joshua S. Morris, ''New Subsidy Allegation Deadline: *Circular Welded Carbon-Quality Steel Pipe from India, the Sultanate of Oman, the United Arab Emirates, and the Socialist Republic of Vietnam*,'' dated December 15, 2011.

On January 3, 2012, SeAH VINA requested that the Department terminate the countervailing duty (''CVD'') investigation of circular welded pipe from Vietnam, stating that in a recent decision the U.S. Court of Appeals for the Federal Circuit (''CAFC'') found that the Department does not have the authority to apply the CVD law to countries the Department considers non-market economies. On January 12, 2012, the Government of Vietnam (''GOV'') also requested that the Department terminate the CVD investigation pursuant to the CAFC's ruling.

On December 20, 2011, the Department issued CVD questionnaires to the GOV, SeAH VINA, and Haiphong Hongyuan. We received initial questionnaire responses (''IQR'') from the GOV, SeAH VINA, and Haiphong Hongyuan on February 16, 2012. Supplemental questionnaires were sent to the GOV, SeAH VINA, and Haiphong Hongyuan on February 27, 2012. We received a supplemental questionnaire response (''SQR'') from Haiphong Hongyuan to the supplemental questionnaire on March 9, 2012, and we received SQRs from the GOV and SeAH VINA to the supplemental questionnaire on March 12, 2012.

One of the petitioning parties, Wheatland Tube, requested two extensions of the deadline for filing new subsidy allegations. As a result, this deadline was extended from February 15 to February 24, and then to February 28, 2012. *See* Memorandum to the File from Susan Kuhbach, ''New Subsidy Allegation Deadline: *Circular Welded Carbon-Quality Steel Pipe from India, the Sultanate of Oman, the United Arab Emirates, and the Socialist Republic of Vietnam,*'' dated February 6, 2012, and Letter to Interested Parties, dated February 24, 2012. No new subsidy allegations were received in this investigation.

We received deficiency comments on the GOV's, SeAH VINA's, and Haiphong Hongyuan's responses from Wheatland Tube on February 22, 2012 (''Deficiency Comments''). We received pre-preliminary comments from Wheatland Tube on March 14, 2012. On March 19, 2012, we received pre-preliminary comments from SeAH. We received additional pre-preliminary comments from Wheatland Tube on March 20, 2012.

The GOV failed to respond to some of the Department's February 27, 2012 questions in its March 12, 2012 supplemental questionnaire response. Rather than requesting an extension of the deadline to submit responsive information, the GOV informed the Department that it did not have time to gather requested information regarding certain banks in time for the questionnaire's deadline. The GOV thereafter submitted its responses to these questions on March 16, 2012. Pursuant to 19 CFR 351.302(d)(i), we are rejecting this untimely filed information and will notify the GOV as specified by 19 CFR 351.302(2).

Period of Investigation

The period for which we are measuring subsidies, *i.e.*, the period of investigation (''POI''), is January 1, 2010, through December 31, 2010.

Scope Comments

In accordance with the preamble to the Department's regulations, we set aside a period of time in our *Initiation Notice* for parties to raise issues regarding product coverage, and encouraged all parties to submit comments within 20 calendar days of publication of that notice. *See Antidumping Duties; Countervailing Duties*, 62 FR 27296, 27323 (May 19, 1997), and *Initiation Notice*, 76 FR at 72173. On December 5, 2011, SeAH VINA filed comments arguing that the treatment of double and triple stenciled pipe in the scope of these investigations differs from previous treatment of these products under other orders on circular welded pipe. Specifically, SeAH VINA claims that the Brazilian, Korean, and Mexican orders on these products exclude ''Standard pipe that is dual or triple certified/stenciled that enters the U.S. as line pipe of a kind used for oil and gas pipelines * * *'' *See, e.g., Certain Circular Welded Non-Alloy Steel Pipe from Brazil, the Republic of Korea, and Taiwan; and Certain Circular Welded Carbon Steel Pipes and Tubes From Taiwan: Final Results of the Expedited Third Sunset Reviews of the Antidumping Duty Order*, 76 FR 66899, 66900 (Oct. 28, 2011). According to SeAH VINA: (i) if the term ''class or kind of merchandise'' has meaning, it cannot have a different meaning when applied to the same products in two different cases; and (ii) the distinction between standard and line pipe reflected in the Brazil, Korean and Mexican orders derives from customs classifications administered by CBP and, thus, is more administrable.

On December 14, 2011, Allied Tube and Conduit, JMC Steel Group, and Wheatland Tube (collectively, ''certain Petitioners'') responded to SeAH VINA's comments stating that the scope as it appeared in the *Initiation Notice* reflected Petitioners' intended coverage. Certain Petitioners contend that pipe that is multi-stenciled to both line pipe and standard pipe specifications and meets the physical characteristics listed in the scope (*i.e.*, is 32 feet in length or less; is less than 2.0 inches (50 mm) in outside diameter; has a galvanized and/or painted (*e.g.*, polyester coated) surface finish; or has a threaded and/or coupled end finish) is ordinarily used in standard pipe applications. In recent years, certain Petitioners state, the Department has rejected end-use scope classifications, preferring instead to rely on physical characteristics to define coverage, and the scope of these investigations has been written accordingly. Therefore, certain Petitioners ask the Department to reject SeAH VINA's proposed scope modification.

We agree with certain Petitioners that the Department seeks to define the scopes of its proceedings based on the physical characteristics of the merchandise. *See Notice of Final Determination of Sales at Less Than Fair Value and Affirmative Final Determination of Critical Circumstances: Circular Welded Carbon Quality Steel Pipe From the People's Republic of China*, 73 FR 31970 (June 5, 2008) and accompanying Issues and Decision Memorandum at Comment 1. Moreover, we disagree with SeAH VINA's contention that once a ''class or kind of merchandise'' has been established that the same scope description must apply across all proceedings involving the product. For example, as the Department has gained experience in administering antidumping duty (''AD'') and CVD orders, it has shifted away from end use classifications to scopes defined by the physical characteristics. *Id.* Thus, proceedings initiated on a given product many years ago may have end use classifications while more recent proceedings on the product would not. *Compare Countervailing Duty Order: Oil Country Tubular Goods from Canada*, 51 FR 21783 (June 16, 1986) (describing subject merchandise as being ''intended for use in drilling for oil and gas'') with *Certain Oil Country Tubular Goods From the People's Republic of China:*

Amended Final Affirmative Countervailing Duty Determination and Countervailing Duty Order, 75 FR 3203 (January 20, 2010) (describing the subject merchandise in terms of physical characteristics without regard to use or intended use). Finally, certain Petitioners have indicated the domestic industry's intent to include multi-stenciled products that otherwise meet the physical characteristics set out in the scope. Therefore, the Department is not adopting SeAH VINA's proposed modification of the scope.

Scope of the Investigation

This investigation covers welded carbon-quality steel pipes and tube, of circular cross-section, with an outside diameter (''O.D.'') not more than 16 inches (406.4 mm), regardless of wall thickness, surface finish (*e.g.*, black, galvanized, or painted), end finish (plain end, beveled end, grooved, threaded, or threaded and coupled), or industry specification (*e.g.*, American Society for Testing and Materials International (''ASTM''), proprietary, or other) generally known as standard pipe, fence pipe and tube, sprinkler pipe, and structural pipe (although subject product may also be referred to as mechanical tubing). Specifically, the term ''carbon quality'' includes products in which: (a) Iron predominates, by weight, over each of the other contained elements; (b) the carbon content is 2 percent or less, by weight; and (c) none of the elements listed below exceeds the quantity, by weight, as indicated:

(i) 1.80 percent of manganese;
(ii) 2.25 percent of silicon;
(iii) 1.00 percent of copper;
(iv) 0.50 percent of aluminum;
(v) 1.25 percent of chromium;
(vi) 0.30 percent of cobalt;
(vii) 0.40 percent of lead;
(viii) 1.25 percent of nickel;
(ix) 0.30 percent of tungsten;
(x) 0.15 percent of molybdenum;
(xi) 0.10 percent of niobium;
(xii) 0.41 percent of titanium;
(xiii) 0.15 percent of vanadium;
(xiv) 0.15 percent of zirconium.

Subject pipe is ordinarily made to ASTM specifications A53, A135, and A795, but can also be made to other specifications. Structural pipe is made primarily to ASTM specifications A252 and A500. Standard and structural pipe may also be produced to proprietary specifications rather than to industry specifications. Fence tubing is included in the scope regardless of certification to a specification listed in the exclusions below, and can also be made to the ASTM A513 specification. Sprinkler pipe is designed for sprinkler fire suppression systems and may be made to industry specifications such as ASTM A53 or to proprietary specifications. These products are generally made to standard O.D. and wall thickness combinations. Pipe multi-stenciled to a standard and/or structural specification and to other specifications, such as American Petroleum Institute (''API'') API–5L specification, is also covered by the scope of this investigation when it meets the physical description set forth above, and also has one or more of the following characteristics: Is 32 feet in length or less; is less than 2.0 inches (50mm) in outside diameter; has a galvanized and/or painted (*e.g.*, polyester coated) surface finish; or has a threaded and/or coupled end finish.

The scope of this investigation does not include: (a) Pipe suitable for use in boilers, superheaters, heat exchangers, refining furnaces and feedwater heaters, whether or not cold drawn; (b) finished electrical conduit; (c) finished scaffolding [1]; (d) tube and pipe hollows for redrawing; (e) oil country tubular goods produced to API specifications; (f) line pipe produced to only API specifications; and (g) mechanical tubing, whether or not cold-drawn. However, products certified to ASTM mechanical tubing specifications are not excluded as mechanical tubing if they otherwise meet the standard sizes (*e.g.*, outside diameter and wall thickness) of standard, structural, fence and sprinkler pipe. Also, products made to the following outside diameter and wall thickness combinations, which are recognized by the industry as typical for fence tubing, would not be excluded from the scope based solely on their being certified to ASTM mechanical tubing specifications:

1.315 inch O.D. and 0.035 inch wall thickness (gage 20)
1.315 inch O.D. and 0.047 inch wall thickness (gage 18)
1.315 inch O.D. and 0.055 inch wall thickness (gage 17)
1.315 inch O.D. and 0.065 inch wall thickness (gage 16)
1.315 inch O.D. and 0.072 inch wall thickness (gage 15)
1.315 inch O.D. and 0.083 inch wall thickness (gage 14)
1.315 inch O.D. and 0.095 inch wall thickness (gage 13)
1.660 inch O.D. and 0.047 inch wall thickness (gage 18)
1.660 inch O.D. and 0.055 inch wall thickness (gage 17)
1.660 inch O.D. and 0.065 inch wall thickness (gage 16)
1.660 inch O.D. and 0.072 inch wall thickness (gage 15)
1.660 inch O.D. and 0.083 inch wall thickness (gage 14)
1.660 inch O.D. and 0.095 inch wall thickness (gage 13)
1.660 inch O.D. and 0.109 inch wall thickness (gage 12)
1.900 inch O.D. and 0.047 inch wall thickness (gage 18)
1.900 inch O.D. and 0.055 inch wall thickness (gage 17)
1.900 inch O.D. and 0.065 inch wall thickness (gage 16)
1.900 inch O.D. and 0.072 inch wall thickness (gage 15)
1.900 inch O.D. and 0.095 inch wall thickness (gage 13)
1.900 inch O.D. and 0.109 inch wall thickness (gage 12)
2.375 inch O.D. and 0.047 inch wall thickness (gage 18)
2.375 inch O.D. and 0.055 inch wall thickness (gage 17)
2.375 inch O.D. and 0.065 inch wall thickness (gage 16)
2.375 inch O.D. and 0.072 inch wall thickness (gage 15)
2.375 inch O.D. and 0.095 inch wall thickness (gage 13)
2.375 inch O.D. and 0.109 inch wall thickness (gage 12)
2.375 inch O.D. and 0.120 inch wall thickness (gage 11)
2.875 inch O.D. and 0.109 inch wall thickness (gage 12)
2.875 inch O.D. and 0.134 inch wall thickness (gage 10)
2.875 inch O.D. and 0.165 inch wall thickness (gage 8)
3.500 inch O.D. and 0.109 inch wall thickness (gage 12)
3.500 inch O.D. and 0.148 inch wall thickness (gage 9)
3.500 inch O.D. and 0.165 inch wall thickness (gage 8)
4.000 inch O.D. and 0.148 inch wall thickness (gage 9)
4.000 inch O.D. and 0.165 inch wall thickness (gage 8)
4.500 inch O.D. and 0.203 inch wall thickness (gage 7)

The pipe subject to this investigation is currently classifiable in Harmonized Tariff Schedule of the United States (''HTSUS'') statistical reporting numbers 7306.19.1010, 7306.19.1050, 7306.19.5110, 7306.19.5150, 7306.30.1000, 7306.30.5025, 7306.30.5032, 7306.30.5040, 7306.30.5055, 7306.30.5085, 7306.30.5090, 7306.50.1000, 7306.50.5050, and 7306.50.5070. Although the HTSUS subheadings are provided for convenience and customs purposes, the written description of the merchandise under the investigation is dispositive.

Alignment of Final Determination

On November 22, 2011, the Department initiated an AD investigation concurrent with this CVD investigation of circular welded pipe

[1] Finished scaffolding is defined as component parts of a final, finished scaffolding that enters the United States unassembled as a ''kit.'' A ''kit'' is understood to mean a packaged combination of component parts that contain, at the time of importation, all the necessary component parts to fully assemble a final, finished scaffolding.

from Vietnam. *See Circular Welded Carbon-Quality Steel Pipe from India, the Sultanate of Oman, the United Arab Emirates, and the Socialist Republic of Vietnam: Initiation of Antidumping Duty Investigations,* 76 FR 72164 (November 22, 2011). The scope of the merchandise being covered is the same for both the AD and CVD investigations. On March 23, 2012, Petitioners submitted a letter, in accordance with section 705(a)(1) of the Tariff Act of 1930, as amended (''the Act''), requesting alignment of the final CVD determination with the final determination in the companion AD investigation. Therefore, in accordance with section 705(a)(1) of the Act and 19 CFR 351.210(b)(4), the final CVD determination will be issued on the same date as the final AD determination, which is currently scheduled to be issued on August 6, 2012.

Application of the Countervailing Duty Law to Imports From Vietnam

On April 1, 2010, the Department published *Bags from Vietnam Final Determination* in which we found the CVD law applicable to Vietnam. *See Polyethylene Retail Carrier Bags from the Socialist Republic of Vietnam: Final Affirmative Countervailing Duty Determination,* 75 FR 16428 (April 1, 2010) (''*Bags from Vietnam Final Determination*''), and accompanying Issues and Decision Memorandum. Furthermore, on March 13, 2012, HR 4105 was enacted which makes clear that the Department has the authority to apply the CVD law to non-market economies such as Vietnam. The effective date provision of the enacted legislation makes clear that this provision applies to this proceeding. See HR 4105, 112th Cong. 1(b) (2012) (enacted).

Additionally, for reasons stated in *Bags from Vietnam Final Determination,* and accompanying Issues and Decision Memorandum at Comment 3, we are using the date of January 11, 2007, the date on which Vietnam became a member of the WTO, as the date from which the Department will identify and measures subsidies in Vietnam for purposes of CVD investigations.

Subsidies Valuation Information

Allocation Period

The average useful life (''AUL'') period in this proceeding, as described in 19 CFR 351.524(d)(2), is 15 years according to the U.S. Internal Revenue Service's 1977 Class Life Asset Depreciation Range System. *See* U.S. Internal Revenue Service Publication 946 (2008), *How to Depreciate Property,* at Table B–2: Table of Class Lives and Recovery Periods. No party in this proceeding has disputed this allocation period.

Attribution of Subsidies

The Department's regulations at 19 CFR 351.525(b)(6)(i) state that the Department will normally attribute a subsidy to the products produced by the corporation that received the subsidy. However, 19 CFR 351.525(b)(6)(ii) through (v) directs that the Department will attribute subsidies received by certain other companies to the combined sales of those companies if (1) cross-ownership exists between the companies, and (2) the cross-owned companies produce the subject merchandise, are a holding or parent company of the subject company, produce an input that is primarily dedicated to the production of the downstream product, or transfer a subsidy to a cross-owned company.

According to 19 CFR 351.525(b)(6)(vi), cross-ownership exists between two or more corporations where one corporation can use or direct the individual assets of the other corporation(s) in essentially the same ways it can use its own assets. This regulation states that this standard will normally be met where there is a majority voting interest between two corporations or through common ownership of two (or more) corporations. The Court of International Trade (''CIT'') has upheld the Department's authority to attribute subsidies based on whether a company could use or direct the subsidy benefits of another company in essentially the same way it could use its own subsidy benefits. *See Fabrique de Fer de Charleroi, SA* v. *United States,* 166 F. Supp. 2d 593, 600–604 (CIT 2001).

SeAH VINA

SeAH VINA reported that it is a wholly owned subsidiary of SeAH Steel Corp. (''SeAH Steel''), a manufacturer of pipe and other steel products based in South Korea. SeAH VINA also reported that it does not have any subsidiaries, nor does it hold ownership claim in any other company.

SeAH VINA's parent company, SeAH Steel, owns 50 percent of the shares of Vietnam Steel Pipe Corp. (''Vinapipe''), a Vietnamese producer of circular welded pipe. According to SeAH VINA, the remaining 50% of Vinapipe is owned by Vietnam Steel Corporation, a corporation wholly-owned by the GOV. In its Deficiency Comments on SeAH VINA's questionnaire response, Wheatland Tube argued that cross-ownership exists between SeAH VINA and Vinapipe and, thus, SeAH VINA should have provided a questionnaire response on behalf of Vinapipe. In our supplemental questionnaire to SeAH VINA, we asked several questions in order to determine whether its relationship with Vinapipe met the cross-ownership standard under 19 CFR 351.525(b)(6)(vi). SeAH VINA provided the investment certificates and charter documents for Vinapipe as well as the joint venture agreement between SeAH Steel and Vietnam Steel Corporation. *See* SeAH VINA's SQR at Appendix S–1.

Based upon our examination of these documents, as well as other information on the record, we do not find evidence that Vinapipe is controlled by either SeAH Steel or SeAH VINA under 19 CFR 351.525(b)(6)(vi). Specifically, the voting structure of Vinapipe requires at least a 65% vote on any management or operational issues, which would require support from both SeAH Steel and Vietnam Steel Corporation. In addition, each party selects an equal number of members of the Board of Directors (referred to as the Members' Council) and the nomination of the Chairman and General Director rotates between SeAH Steel and Vietnam Steel Corporation (*i.e.*, if it is one party's turn to select the Chairman, then the other Party selects the General Director). Furthermore, SeAH VINA reported that there were no transactions, business agreements, or shared board members between it and Vinapipe. See SeAH VINA's SQR at 3–6.

Therefore, we preliminarily determine that Vinapipe does not meet the cross-ownership standard of 19 CFR 351.525(b)(6)(vi) because the evidence does not support a finding that SeAH Steel can use or direct the individual assets of Vinapipe in essentially the same ways it can use its own assets. Accordingly, we have not requested a questionnaire response from Vinapipe. We are attributing subsidy benefits received by SeAH VINA solely to the sales of SeAH VINA.

Wheatland Tube has also stated that SeAH VINA is affiliated with the Korean steel company Pohang Iron & Steel Co. Ltd. (''POSCO''), and that POSCO provides SeAH VINA with raw material inputs; thus, Wheatland Tube states that a questionnaire response is due from POSCO. Wheatland Tube states that the affiliation between SeAH VINA and POSCO is based upon shares held by POSCO in SeAH VINA's Korean parent company, SeAH Steel.

While the Department has found SeAH Steel and POSCO to be affiliated in certain AD investigations of imports

from Korea, there is nothing on the record, nor has Wheatland Tube provided any information, to demonstrate cross-ownership as defined under 19 CFR 351.525(b)(6)(vi) between SeAH VINA and POSCO. Accordingly, we preliminarily determine that cross-ownership does not exist between SeAH VINA and POSCO; thus, there is no need to solicit a questionnaire response from POSCO. Furthermore, Wheatland Tube has provided no information that POSCO is providing SeAH VINA with an input that is produced in Vietnam. According to the information submitted by Wheatland Tube, POSCO's steel facility in Vietnam is currently being constructed and will not be operational until 2013.

Haiphong Hongyuan

Haiphong Hongyuan informed us that it is wholly owned by MAT Holdings, Inc., which is located in the United States. See Haiphong Hongyuan's IQR, at 2. According to Haiphong Hongyuan, it has no affiliates in Vietnam, and it did not export any subject merchandise to the United States through a trading company. Therefore, we are attributing subsidy benefits received by Haiphong Hongyuan solely to Haiphong Hongyuan's sales.

Analysis of Programs

Based upon our analysis of the petition and the responses to our questionnaires, we preliminarily determine the following:

Programs Preliminarily Determined To Be Countervailable

Import Duty Exemptions for Imported Raw Materials for Exported Goods

Pursuant to Article 3.3 of the *Law on Import and Export Tax,* goods imported from foreign countries into non-tariff zones for use only in non-tariff zones are not liable for import duties. In accordance with *Decree 29/2008/ND–CP issuing regulations on industrial zones, export processing zones and economic zones,* these same rules extend to export processing zones and export processing enterprises.

Haiphong Hongyuan reported that it qualified for duty exemptions on its imported raw materials used to produce exported goods based on its designation as a qualified export processing enterprise. The GOV provided Haiphong Hongyuan's investment certificate, which confirmed its designation as an export processing enterprise.

SeAH VINA reported that it paid the applicable import tariffs on its raw material imports.

Import duty exemptions on inputs for exported products constitute countervailable export subsidies to the extent that the exemption extends to inputs that are not consumed in the production of the exported product, making normal allowances for waste. *See* 19 CFR 351.519(a)(1)(ii). However, the government in question must have in place and apply a system to confirm which inputs are consumed in the production of the exported products, and in what amounts. This system must be reasonable, effective for the purposes intended, and based on generally accepted commercial practices in the country of export. If such a system does not exist, or if it is not applied effectively, and the government in question does not carry out an examination of actual inputs involved to confirm which inputs are consumed in the production of the exported product, the entire amount of any exemption, deferral, remission or drawback is countervailable. *See* 19 CFR 351.519(4)(i)–(ii). In *Bags From Vietnam Final Determination,* the Department determined that the GOV does not have such a system and companies are, in fact, allowed to choose their own yield rates within a range established by the GOV. Thus, we found the duty exemptions on raw materials for exports to be fully countervailable. *See Bags from Vietnam Final Determination,* and accompanying Issues and Decision Memorandum at Comment 10.

We preliminarily determine that Haiphong Hongyuan received a countervailable subsidy, as described by section 771(5)(A) of the Act, under the Import Duty Exemptions for Imported Raw Materials for Exported Goods program. We preliminarily determine this program to be specific under section 771(5A)(A) and (B) of the Act because benefits under this program are contingent upon export performance. In addition, we preliminarily determine a financial contribution exists pursuant to section 771(5)(D)(ii) of the Act, as the exempted duties represent revenue forgone by the GOV.

Normally, we treat exemptions from indirect taxes and import charges on raw materials as recurring benefits, consistent with 19 CFR 351.524(c)(1), and allocate the benefits to the year in which they were received. Thus, to calculate the subsidy rate for Haiphong Hongyuan, we first determined the total value of duties exempted during the POI by multiplying the value of each raw material imported during the POI by the applicable tariff rate. We then divided this by the value of Haiphong Hongyuan's export sales.

On this basis, we preliminarily determine that Haiphong Hongyuan received a countervailable subsidy of 8.04 percent *ad valorem. See* Memorandum from Christopher Siepmann, International Trade Compliance Analyst to Yasmin Nair, Program Manager, ''Preliminary Calculation Memorandum for Haiphong Hongyuan,'' dated March 26, 2012 (''Haiphong Hongyuan Prelim Calc Memo'').

B. Import Duty Exemptions for Imported Fixed Assets, Spare Parts, and Accessories for Export Processing Enterprises or Export Processing Zones [2]

Article 16.6 of the *Law on Import Tax and Export Tax,* dated June 14, 2005, provides duty exemptions on imported fixed assets, spare parts, and accessories for projects entitled to investment incentives. Pursuant to *Decree No. 108/2006/ND–CP, Detailing and Guiding the Implementation of a Number of Articles of the Investment Law,* projects in certain geographical areas, including industrial development zones, are entitled to receive these investment incentives.

The GOV reported that Haiphong Hongyuan's location in the Do Son Hai Phong Industrial Zone made it eligible to receive duty exemptions on fixed assets. However, Haiphong Hongyuan reported that it claimed these import duty exemptions pursuant to its designation as a qualified export processing enterprise. As discussed above for raw material imports, Article 3.3 of the *Law on Import and Export Tax,* permits imports into non-tariff zones to be exempt from duties so long as they are only in non-tariff zones. For this preliminary determination, we are relying on Haiphong Hongyuan's explanation of the basis for its eligibility.

We preliminarily determine that, for Haiphong Hongyuan, this program is specific and constitutes an export subsidy pursuant to sections 771(5A)(A)

[2] The Department initiated on this program under the title ''*Exemption of Import Duties on Import Duties on Imports of Fixed Assets, Spare Parts and Accessories for Industrial Zones.*'' Because we now have a better understanding of why import duty exemptions may be granted, we have analyzed benefits received by Haiphong Hongyuan and SeAH VINA under two different programs, even though both companies are located in industrial zones. This is because the respondents receive benefits under separate provisions. Haiphong Hongyuan's benefits have been analyzed as ''*Import Duty Exemptions for Imports of Fixed Assets, Spare Parts and Accessories for Export Processing Enterprises or Export Processing Zones.*'' SeAH VINA is addressed under ''*Import Duty Exemptions for Imports of Fixed Assets, Spare Parts and Accessories for Encouraged Projects,*'' which replaces both ''*Duty Exemptions on Goods for the Creation of Fixed Assets for Encouraged Projects*'' and ''*Exemption of Import Duties on Imports of Fixed Assets, Spare Parts and Accessories for Industrial Zones.*''

and (B) of the Act, because benefits under this program are contingent upon export performance. In addition, we preliminarily determine a financial contribution exists pursuant to section 771(5)(D)(ii) of the Act because the exempted duties represent revenue forgone by the GOV. Accordingly, we preliminarily determine that the benefits provided to Haiphong Hongyuan under this program constitute a countervailable subsidy within the meaning of section 771(5)(A) of the Act.

Consistent with 19 CFR 351.524(c)(1), we generally treat exemptions from indirect taxes and import charges, such as the tariff exemptions for spare parts and accessories, as conferring recurring benefits. Thus, we allocate the benefits to the year in which they were received. However, when an indirect tax or import charge exemption is provided for, or tied to, the capital structure or capital assets of a firm, the Department may treat it as a non-recurring benefit and allocate the benefit to the firm over the AUL. *See* 19 CFR 351.524(c)(2)(iii) and 19 CFR 351.524(d)(2).

Haiphong Hongyuan provided a list of tariff exemptions that it received for imported fixed assets, spare parts, and accessories since its establishment in 2008. *See* Haiphong Hongyuan's IQR at Exhibit 15. Haiphong Hongyuan's list of tariff exemptions did not identify which items were fixed assets and which were spare parts and accessories. Therefore, the Department relied upon the items' descriptions to classify each item as either a fixed asset or spare part/accessory. Consistent with *Bags from Vietnam Final Determination,* we are treating duty exemptions on fixed assets as non-recurring subsidies and duty exemptions on spare parts and accessories as recurring subsidies.

For years prior to the POI, the duty exemptions on fixed assets were less than 0.5 percent of Haiphong Hongyuan's exports in those years. Therefore, in accordance with 19 CFR 351.524(b)(2), the benefits were expensed in the year of receipt and did not give rise to a countervailable subsidy in the POI. Regarding its imports during the POI, our review shows that although Haiphong Hongyuan imported spare parts and accessories, it paid the applicable duty rate on those items. We applied the ''expense test'' described above to Haiphong Hongyuan's import exemptions for fixed assets and found that total exemptions in the POI were also less than 0.5 percent and, hence, expensed in the POI.

On this basis, we preliminarily determine that Haiphong Hongyuan received a countervailable subsidy of 0.02 percent *ad valorem. See* Haiphong Hongyuan Prelim Calc Memo.

C. Import Duty Exemptions for Imported Fixed Assets, Spare Parts, and Accessories for Encouraged Projects

As explained above, Article 16.6 of the *Law on Import Tax and Export Tax,* dated June 14, 2005, provides duty exemptions on imported fixed assets, spare parts, and accessories for projects entitled to investment incentives. Pursuant to *Decree No. 108/2006/ND–CP, Detailing and Guiding the Implementation of a Number of Articles of the Investment Law,* projects in certain geographical areas, including industrial development zones, are ''encouraged'' and, hence, able to receive these incentives.

According to the GOV, SeAH VINA received duty exemptions because it is located in the Bien Hoa Industrial Zone.

This program was found countervailable in *Bags from Vietnam Final Determination* because the companies investigated in that case were located in industrial zones. The GOV reports that the eligibility criteria for this program changed on October 1, 2010, pursuant to *Decree 87/2010/ND–CP Detailing the implementation of the Law on Import and Export Tax 2005.* However, Article 16.2 of this decree appears to grandfather benefits to companies that enjoyed these tax exemptions prior to October 1, 2010. The Department intends to seek additional information following this preliminary determination to confirm benefits to SeAH VINA extended beyond October 1, 2010, for this program.

SeAH VINA stated that, although eligible for these exemptions due to its location in an industrial development zone, it did not use this program. Rather, SeAH VINA claims it did not pay import duties because the Vietnamese customs law permits duty-free importation of components used to construct certain machinery. In this case, this ''certain machinery'' was a pipe forming mill and the applicable duty rate was zero.

In response to the Department's request, SeAH VINA provided the customs documents associated with these imports. These documents indicate that SeAH VINA received these duty exemptions pursuant to the entitlements established by *Decree No 108/2006/ND–CP, Detailing and Guiding the Implementation of a Number of Articles of the Investment Law.* Relying on these import documents and the GOV's statements concerning SeAH VINA's eligibility for this program, we preliminarily determine that SeAH VINA used the program being investigated and that the applicable duties in the absence of the program were not zero.

Therefore, we preliminarily determine that the duty exemptions received by SeAH VINA on its imports of fixed assets, spare parts, and accessories are specific under section 771(5A)(D)(iv) of the Act, because they are limited to companies located in particular geographic areas. In addition, we preliminarily determine a financial contribution exists pursuant to section 771(5)(D)(ii) of the Act, as the exempted duties represent revenue forgone by the GOV.

We are relying on the list of yearly imported fixed assets, spare parts, and accessories reported by SeAH VINA. Because SeAH VINA reported that all imports under this program were used to create fixed assets, we are treating all of SeAH VINA's reported imports as either spare parts or accessories. Consistent with *Bags from Vietnam Final Determination,* we are treating import duty exemptions on spare parts and accessories as recurring subsidies.

Because we do not have complete information on the tariff rates applicable to SeAH VINA's imports, we have relied upon Haiphong Hongyuan's reported import exemptions to calculate an average tariff rate to apply to SeAH VINA's reported imports. Although we are investigating Haiphong Hongyuan's tariff exemptions as specific to export processing enterprises or export processing zones, the tariff rates reported by Haiphong Hongyuan for its imports would also have been applicable to SeAH VINA in the absence of this subsidy program. For further description of this tariff rate calculation, *see* Memorandum from Austin Redington, International Trade Analyst, to Yasmin Nair, Program Manager, ''Preliminary Calculation Memorandum for SeAH VINA,'' dated March 26, 2012 (''SeAH VINA Prelim Calc Memo''). We will seek additional information on the applicable tariff rates for SeAH VINA's imports for our final determination.

To calculate SeAH VINA's benefit under this program, we first determined the total value of duties exempted during the POI by multiplying the value of each item imported under this program by the facts available tariff rate described above. We then divided the total by SeAH VINA's total sales for 2010.

On this basis, we preliminarily determine that SeAH VINA received a countervailable subsidy of 0.04 percent *ad valorem* under this program. *See* SeAH VINA Prelim Calc Memo.

II. Programs Preliminarily Determined To Have Been Not Used by Respondents or To Not Provide Benefits During the POI

A. Preferential Lending to the Steel Industry

Petitioners claim that according to GOV policy, projects in specified industries are eligible for preferential loans or debt restructuring. They argue that this is evidenced by the GOV's designation of steel as a spearhead industry. Further, Petitioners claim that the GOV exerts control over nominally commercial banks to provide debt restructuring, loan forgiveness, and preferential lending to the Vietnamese steel industry, and that these industrial policies have resulted in preferential loans to manufacturers of circular welded pipe products.

In response to our questionnaire, the GOV provided numerous planning documents pertaining to the steel industry. The GOV submitted *Resolution 56/2006/QH11 on June, 29, 2006 on five-year social-economic development plan for the period of 2006–2010* (*see* GOV IQR at Exhibit 7); the Resolution 62/2006/NQ–HDND by Dong Nai People's Council on the targets, tasks and solution for socio-development and security of the city 2006–2010 (*see* GOV IQR at Exhibit 32); Resolution 08/2006/NQ–HDND by Hai Phong People's Council on the city plan for socio-economic development plan for 2006–2010 (see GOV IQR at Exhibit 33); *Decision 145/2007/QD–TTg, Approving the master plan on development of Vietnam Steel period 2007–2015 with regard to the year 2025,* dated September 4, 2007 (*see* GOV IQR at Exhibit 12); *Decision 134/2001/QD–TTg, Approving the overall planning for development of steel industry until the year 2010,* dated September 10, 2001 (*see* GOV IQR at Exhibit 13); and *Decision No. 55/2007/QD–TTg, Approving the List of Priority Industries and Spearhead Industries for the 2007–2010 Period with a Vision to 2020, and a Number of Incentive Policies for These Industries* (*see* GOV IQR at Exhibit 6).

Based on our review of these plans, circular welded pipe is not listed among the steel industry products designated for financial support, though other specific steel industry products are listed. The GOV confirmed that circular welded pipe is not the subject of any of the projects identified in the planning documents. Further, the GOV clarified that the designation of a spearhead or priority industry is provided under Decision 55/2007/QD–TTg, and only steel draft and special-use steel are designated as priority industries during 2007–2010. The GOV defined special-use steel as high-quality steel for use by the defense industry, electrical engine manufacturing and ship building. It did not define ''steel draft,'' but claims that circular welded pipe is neither considered steel draft nor special-use steel, and circular welded pipe manufacturing is not designated as a priority industry.

The Department also asked the GOV to explain whether circular welded pipe is covered by the development objectives of *Resolution 08/2006/NQ–HDND.* The GOV responded by stating that Resolution 08/2005/NQ–HDND sets forth the goals for development of Haiphong City from 2006–2010 and lists sectors in which Hai Phong City hopes to achieve further development. *See* GOV IQR at 4. The GOV also stated that a sector listed in the plan does not entitle that sector to any form of investment preference. Rather, the ability to provide investment preferences rests largely with the central government; the provincial government can only assist industrial sectors in terms of administrative policies, which must be explicitly provided for in decisions issued by the people's committee. *Id.* The GOV added that circular welded pipe production is not an encouraged industry in Haiphong City because circular welded pipe is a low value-added product, and current production capacity exceeds market demand. *Id.*

Based on this information, we preliminarily determine that circular welded pipe was not part of a state targeted, or encouraged, industry or project; and that the various plans that relate to the promotion of the Vietnamese steel industry do not cover the production of circular welded pipe. Furthermore, the respondent producers of circular welded pipe are not hot-rolled steel manufacturers, a type of steel production that is referenced in the GOV steel industry plans. We intend to confirm the accuracy of the information provided by the GOV for this program at verification.

B. Provision of Land for Less Than Adequate Remuneration (''LTAR'') in Encouraged Industries or Industrial Zones

Petitioners claim that the GOV provides a land-rent reduction or exemption program for encouraged industries or enterprises in industrial zones.

As explained above, Haiphong Hongyuan is located in Do Son Hai Phong Industry Zone. Haiphong Hongyuan rents its land directly from the industrial development corporation (''IDC'') Hai Phong Do Son Industrial Zone Joint Venture Company, which is a joint-venture between the Hai Phong Construction and Development Infrastructure Group and Asia Glorious Development Ltd. of Hong Kong, a 100 percent foreign enterprise.

According to Article 35.8 of Decree 29/2008/ND–CP, the provincial People's Committee is responsible for ''carrying out the procedures for leasing or allocating land in industrial zones {and} economic zones in accordance with the law on land and relevant laws.'' Article 36.1 of the same law states that ''{t}he Management Committee is an agency under the provincial People's Committee which directly performs the function of State administration with respect to industrial zones and economic zones within the province or city under central authority in accordance with this Decree and relevant laws.'' *See* GOV IQR at Exhibit 41. However, the GOV informed us that the IDC, not the management committee, is responsible for developing the land and contracting with enterprises to locate in the zone. According to the GOV, the management committee, in this case the Hai Phong Export Processing Zone and Industrial Zone Authority, ''plays no role in the negotiations between the infrastructure development company and the enterprise.'' *See* GOV SQR at 14. The GOV's claim is supported by Haiphong Hongyuan, which informed us that ''Haiphong Hongyuan leased the land-use rights from the Haiphong Doson {Industrial Joint Venture Company} as detailed in the land lease agreement included at Exhibit 17–A.'' Haiphong Hongyuan's lease agreement shows that, although the agreement is subject to the ''management rules and regulations of Hai Phong Export Processing Zone and Industrial Zone Authority and Hai Phong Do Son Industrial Zone,'' the contracting parties are Hai Phong Do Son Industrial Joint Venture Company and Haiphong Hongyuan. *See* Haiphong Hongyuan IQR at Exhibit 17. Haiphong Hongyuan also provided a memorandum of understanding predating its establishment, between Hai Phong Do Son Industrial Joint Venture Company and MAT Holdings, Inc., which summarizes the result of negotiations between the two parties for Haiphong Hongyuan's land. *See* Haiphong Hongyuan IQR at Exhibit 18. Thus, we preliminarily determine that the price of Haiphong Hongyuan's land and the terms of its lease were established through negotiations between Haiphong Hongyuan (or its parent company) and Hai Phong Do Son

Industrial Joint Venture Company. Additional information on which we are basing our determination cannot be discussed in this notice because the GOV designated it business proprietary. *See* Haiphong Hongyuan Prelim Calc Memo.

The Department has found that when an industrial zone is part of a larger jurisdiction, and the larger jurisdiction is responsible for providing land use rights throughout the jurisdiction, the provision of such rights within the industrial zone is regionally specific under section 771(5A)(D)(iv) of the Act.[3] However, in this instance, the authority to negotiate the price and enter into land use contracts in the Hai Phong Do Son Industrial Zone rests with the Haiphong Do Son Industrial Joint Venture Company. As such, the provision of land use rights within this industrial zone is not limited to an enterprise or industry located within a designated geographical zone. Therefore, we are preliminary determining that Haiphong Hongyuan did not receive a benefit, and did not use this program.

We are not finding this program ''not countervailable'' because the allegation involved a national law that authorizes exemptions and reductions in land use fees in the country's designated industrial zones.[4] Because this program is authorized under a national law, the exemptions and reductions of land use fees may vary from industrial zone to industrial zone. Thus, our determination with respect to the provision of land use rights to Haiphong Hongyuan is limited to the industrial zone in which the company is located.

Although the record as a whole supports the above finding, there are some apparent contradictions in the GOV's response. For example, in its first supplemental questionnaire response, the GOV states that ''the industrial zone management authority is limited to the specific industrial zone that it administers, and has no land use right authority beyond the industrial zone.'' However, on the next page, the GOV states that ''{t}he regulating authority is called the Hai Phong Economic Zone Authority. This authority has jurisdiction over all of the industrial zones within Hai Phong City.'' *See* GOV SQR at 15–16. The documentation provided by the GOV and Haiphong Hongyuan indicates that the entity is called the ''Hai Phong Export Processing Zone and Industrial Zone Authority.'' *See, e.g.*, Haiphong Hongyuan IQR at Exhibit 17; *see also* GOV SQR at Exhibit GOVS1–21. We intend to seek additional clarification from the GOV before issuing our final determination.

SeAH VINA's land payments and contract are through a provincial government. However, the land rent was established by a contract that preceded the January 11, 2007 cut-off date. Thus, consistent with the *Bags from Vietnam Final Determination,* we are preliminarily determining that this program does not provide benefits to SeAH VINA.

C. Government Provision of Water for LTAR in Industrial Zones

Petitioners claim that occupants of industrial zones are offered special rates on water. Information in the questionnaire responses shows that both Haiphong Hongyuan and SeAH VINA sourced their water from industrial development companies. The GOV stated that water wholesalers provided the industrial development companies with the water. Moreover, both companies paid the applicable tariff rates for their water and there was no separate rate for companies located within the industrial zones.

On this basis, we preliminarily determine that the GOV's provision of water is not specific to the industrial zones in which the respondents are located. Thus, we preliminarily determine that this program is not used.

D. Land Rent Reduction or Exemption for Exporters
E. Land Rent Reduction or Exemption for FIEs
F. Export Promotion Program
G. New Product Development Program
H. Income Tax Preferences for Encouraged Industries
I. Income Tax Preferences for Enterprises in Industrial Zones
J. Tax Refund for Reinvestment by FIEs
K. Income Tax Preferences for FIEs
L. Income Tax Preferences for Exporters
M. Preferential Lending for Exporters
N. Import Duty Preferences for FIEs

Verification

In accordance with section 782(i)(1) of the Act, we will verify the information submitted by the respondents prior to making our final determination.

Suspension of Liquidation

In accordance with section 703(d)(1)(A)(i) of the Act, we have calculated individual rates for respondents individually investigated, SeAH VINA and Haiphong Hongyuan. We have also calculated an all-others rate. Sections 703(d) and 705(c)(5)(A) of the Act state that for companies not investigated, we will determine an all-others rate by weight-averaging the individual subsidy rates by each company's exports of the subject merchandise to the United States. However, the all-others rate may not include zero and *de minimis* rates or any rates based solely on the facts available. As SeAH VINA's preliminary calculated subsidy rate is *de minimis*, Haiphong Hongyuan's calculated rate is being used as the All Others rate.

We preliminarily determine the total estimated net countervailable subsidy rates to be:

Exporter/Manufacturer	Net subsidy rate (%)
SeAH Steel VINA Corp	0.04
Vietnam Haiphong Hongyuan Machinery Manufactory Co., Ltd	8.06
All Others	8.06

In accordance with sections 703(d)(1)(B) and (2) of the Act, we are directing CBP to suspend liquidation of all entries of circular welded pipe from Vietnam that are entered, or withdrawn from warehouse, for consumption on or after the date of the publication of this notice in the **Federal Register**, and to require a cash deposit or bond for such entries of merchandise in the amounts indicated above. However, we are not directing CBP to suspend liquidation of entries produced by SeAH VINA, because its rate is *de minimis*.

ITC Notification

In accordance with section 703(f) of the Act, we will notify the ITC of our determination. In addition, we are making available to the ITC all non-privileged and non-proprietary information relating to this investigation. We will allow the ITC access to all privileged and business proprietary information in our files, provided the ITC confirms that it will not disclose such information, either publicly or under an administrative protective order, without the written consent of the Assistant Secretary for Import Administration.

In accordance with section 705(b)(2) of the Act, if our final determination is affirmative, the ITC will make its final determination within 45 days after the Department makes its final determination.

[3] *See, e.g., Oil Country Tubular Goods From the People's Republic of China: Final Affirmative Countervailing Duty Determination, Final Negative Critical Circumstances Determination,* 74 FR 64045 (December 7, 2009), and accompanying Issues and Decision Memorandum at 20.

[4] *See* Law on Investment of the Socialist Republic of Vietnam, National Assembly No. 59/2005/QH11 at Article 36, and the Government of Vietnam Decree No. 108/2006/ND/CP Providing Guidelines for Implementation of a Number of Articles of Law on Investment at Article 26.

Disclosure and Public Comment

In accordance with 19 CFR 351.224(b), we will disclose to the parties the calculations for this preliminary determination within five days of its announcement. Due to the anticipated timing of verification and issuance of verification reports, case briefs for this investigation must be submitted no later than one week after the issuance of the last verification report. See 19 CFR 351.309(c)(i) (for a further discussion of case briefs). Rebuttal briefs must be filed within five days after the deadline for submission of case briefs, pursuant to 19 CFR 351.309(d)(1). A list of authorities relied upon, a table of contents, and an executive summary of issues should accompany any briefs submitted to the Department. Executive summaries should be limited to five pages total, including footnotes. *See* 19 CFR 351.309(c)(2) and (d)(2).

Section 774 of the Act provides that the Department will hold a public hearing to afford interested parties an opportunity to comment on arguments raised in case or rebuttal briefs, provided that such a hearing is requested by an interested party. If a request for a hearing is made in this investigation, the hearing will be held two days after the deadline for submission of the rebuttal briefs, pursuant to 19 CFR 351.310(d), at the U.S. Department of Commerce, 14th Street and Constitution Avenue, N.W., Washington, DC 20230. Parties should confirm by telephone the time, date, and place of the hearing 48 hours before the scheduled time.

Interested parties who wish to request a hearing, or to participate if one is requested, must electronically submit a written request to the Assistant Secretary for Import Administration using IA ACCESS, within 30 days of the publication of this notice, pursuant to 19 CFR 351.310(c). Requests should contain: (1) The party's name, address, and telephone; (2) the number of participants; and (3) a list of the issues to be discussed. Oral presentations will be limited to issues raised in the briefs. *Id.*

This determination is published pursuant to sections 703(f) and 777(i) of the Act.

Dated: March 26, 2012.

Paul Piquado,

Assistant Secretary for Import Administration.

[FR Doc. 2012–7748 Filed 3–29–12; 8:45 am]

BILLING CODE 3510–DS–P

DEPARTMENT OF COMMERCE

International Trade Administration

[C–520–806]

Circular Welded Carbon-Quality Steel Pipe From the United Arab Emirates: Preliminary Negative Countervailing Duty Determination and Alignment of Final Countervailing Duty Determination With Final Antidumping Duty Determination

AGENCY: Import Administration, International Trade Administration, Department of Commerce.

SUMMARY: The Department of Commerce preliminarily determines that countervailable subsidies are not being provided to producers and exporters of circular welded carbon-quality steel pipe (''circular welded pipe'') from the United Arab Emirates (''UAE'').

DATES: *Effective Date:* March 30, 2012.

FOR FURTHER INFORMATION CONTACT: Joshua Morris or Dustin Ross, AD/CVD Operations, Office 1, Import Administration, International Trade Administration, U.S. Department of Commerce, 14th Street and Constitution Avenue NW., Washington, DC 20230; telephone: (202) 482–1779 and (202) 482–0747, respectively.

SUPPLEMENTARY INFORMATION:

Case History

The following events have occurred since the publication of the Department of Commerce's (''the Department'') notice of initiation in the **Federal Register**. *See Circular Welded Carbon-Quality Steel Pipe from India, the Sultanate of Oman, the United Arab Emirates, and the Socialist Republic of Vietnam: Initiation of Countervailing Duty Investigations,* 76 FR 72173 (November 22, 2011) (''*Initiation Notice*''), and the accompanying Initiation Checklist.

On November 22, 2011, the Department released the U.S. Customs and Border Protection (''CBP'') data on imports of subject merchandise during the period of investigation (''POI''), under administrative protective order (''APO'') to all parties with APO access. *See* Memorandum to the File from Joshua Morris, ''Release of Customs and Border Protection (''CBP'') Data,'' dated November 22, 2011. On November 30, 2011, we received comments on the data from Wheatland Tube, one of the petitioners in this investigation. On December 16, 2011, the Department selected two Emirati producers/exporters of circular welded pipe as mandatory company respondents: (1) Abu Dhabi Metal Pipes & Profiles Industries Complex LLC (''ADPICO''); and (2) Universal Tube and Plastic Industries, Ltd. (''Universal Plastic''). See Memorandum to Christian Marsh, ''Respondent Selection Memorandum,'' dated December 16, 2011. This memorandum is on file electronically in Import Administration's Antidumping and Countervailing Duty Centralized Electronic Service System (''IA ACCESS''), with access to IA ACCESS available in the Department's Central Records Unit (''CRU''), room 7046 of the main Department building.

Also on December 16, 2011, the U.S. International Trade Commission (''ITC'') published its affirmative preliminary determination that there is a reasonable indication that an industry in the United States is materially injured by reason of allegedly subsidized imports of circular welded pipe from India, the Sultanate of Oman, the UAE, and the Socialist Republic of Vietnam. *See Circular Welded Carbon-Quality Steel Pipe from India, Oman, the United Arab Emirates, and Vietnam,* 76 FR 78313 (December 16, 2011).

On December 19, 2011, the Department postponed the deadline for the preliminary determination in this investigation until March 26, 2012. *See Circular Welded Carbon-Quality Steel Pipe from India, the Sultanate of Oman, the United Arab Emirates,* and the Socialist Republic of Vietnam: Postponement of Preliminary Determinations in the Countervailing Duty Investigations, 76 FR 78615 (December 19, 2011). In conjunction with this postponement, the Department also postponed the deadline for the submission of new subsidy allegations until February 15, 2012. *See* Memorandum to the File from Joshua S. Morris, ''New Subsidy Allegation Deadline: *Circular Welded Carbon-Quality Steel Pipe from India, the Sultanate of Oman, the United Arab Emirates, and the Socialist Republic of Vietnam*,'' dated, December 15, 2011.

On December 21, 2011, the Department issued countervailing duty (''CVD'') questionnaires to the Government of the UAE (''GUAE''), ADPICO, and Universal Plastic. The Department received responses from Universal Plastic (''UQR'') on February 16, 2012, and both the GUAE (''GQR'') and ADPICO (''AQR'') on February 17, 2012. The Department received responses to supplemental questionnaires from ADPICO on March 14, 2012, and from Universal Plastic, and the GUAE (''GSR'') on March 16, 2012.

Wheatland Tube requested two extensions of the deadline for filing new subsidy allegations. As a result, this

deadline was extended from February 15 to February 24, and then to February 28, 2012. *See* Memorandum to the File from Susan Kuhbach, ''New Subsidy Allegation Deadline: *Circular Welded Carbon-Quality Steel Pipe from India, the Sultanate of Oman, the United Arab Emirates,* and the Socialist Republic of Vietnam,'' dated February 6, 2012, and Letter to Interested Parties, dated February 24, 2012.

On February 28, 2012, Wheatland Tube submitted new subsidy allegations requesting the Department to expand its CVD investigation to include an additional subsidy program, while also requesting that the Department modify its investigation of already alleged programs in light of information placed on the record of the proceeding by the respondents. See Letter from Petitioner Wheatland Tube, ''New Subsidies Allegation and Additional Factual Information,'' dated February 28, 2012. On March 16, 2012, the Department initiated an investigation into the new subsidy allegations. See Memorandum to Susan H. Kuhbach, ''Analysis of Petitioners' New Subsidy Allegations,'' dated March 16, 2012. On March 26, 2012, the Department issued supplemental questionnaires regarding this new subsidy allegation to the GUAE, ADPICO, and Universal Plastic.

On March 19, 2012, Wheatland Tube submitted pre-preliminary determination comments with respect to this investigation. On March 22, 2012, the GUAE also submitted pre-preliminary determination comments.

Period of Investigation

The period for which we are measuring subsidies, *i.e.*, the POI, is January 1, 2010, through December 31, 2010.

Scope Comments

In accordance with the preamble to the Department's regulations, we set aside a period of time in our *Initiation Notice* for parties to raise issues regarding product coverage, and encouraged all parties to submit comments within 20 calendar days of publication of that notice. *See Antidumping Duties; Countervailing Duties,* 62 FR 27296, 27323 (May 19, 1997), and *Initiation Notice*, 76 FR at 72173. On December 5, 2011, SeAH Steel VINA Corp. (''SeAH VINA''), a mandatory respondent in the concurrent countervailing duty (''CVD'') circular welded pipe from the Socialist Republic of Vietnam investigation, filed comments arguing that the treatment of double and triple stenciled pipe in the scope of these investigations differs from previous treatment of these products under other orders on circular pipe. Specifically, SeAH VINA claims that the Brazilian, Korean, and Mexican orders on these products exclude ''Standard pipe that is dual or triple certified/stenciled that enters the U.S. as line pipe of a kind used for oil and gas pipelines * * *'' *See, e.g., Certain Circular Welded Non-Alloy Steel Pipe from Brazil, the Republic of Korea, and Taiwan; and Certain Circular Welded Carbon Steel Pipes and Tubes From Taiwan: Final Results of the Expedited Third Sunset Reviews of the Antidumping Duty Order,* 76 FR 66899, 66900 (Oct. 28, 2011). According to SeAH VINA: (i) If the term ''class or kind of merchandise'' has meaning, it cannot have a different meaning when applied to the same products in two different cases; and (ii) the distinction between standard and line pipe reflected in the Brazil, Korean and Mexican orders derives from customs classifications administered by CBP and, thus, is more administrable.

On December 14, 2011, Allied Tube and Conduit, JMC Steel Group, and Wheatland Tube (collectively, ''certain Petitioners'') responded to SeAH VINA's comments stating that the scope as it appeared in the *Initiation Notice* reflected Petitioners' intended coverage. Certain Petitioners contend that pipe that is multi-stenciled to both line pipe and standard pipe specifications and meets the physical characteristics listed in the scope (*i.e.*, is 32 feet in length or less; is less than 2.0 inches (50mm) in outside diameter; has a galvanized and/or painted (*e.g.*, polyester coated) surface finish; or has a threaded and/or coupled end finish) is ordinarily used in standard pipe applications. In recent years, certain Petitioners state, the Department has rejected end-use scope classifications, preferring instead to rely on physical characteristics to define coverage, and the scope of these investigations has been written accordingly. Therefore, certain Petitioners ask the Department to reject SeAH VINA's proposed scope modification.

We agree with certain Petitioners that the Department seeks to define the scopes of its proceedings based on the physical characteristics of the merchandise. *See Notice of Final Determination of Sales at Less Than Fair Value and Affirmative Final Determination of Critical Circumstances: Circular Welded Carbon Quality Steel Pipe from the People's Republic of China,* 73 FR 31970 (June 5, 2008) and accompanying Issues and Decision Memorandum at Comment 1. Moreover, we disagree with SeAH VINA's contention that once a ''class or kind of merchandise'' has been established that the same scope description must apply across all proceedings involving the product. For example, as the Department has gained experience in administering antidumping duty (''AD'') and CVD orders, it has shifted away from end use classifications to scopes defined by the physical characteristics. *Id.* Thus, proceedings initiated on a given product many years ago may have end use classifications while more recent proceedings on the product would not. *Compare Countervailing Duty Order: Oil Country Tubular Goods from Canada,* 51 FR 21783 (June 16, 1986) (describing subject merchandise as being ''intended for use in drilling for oil and gas'') with *Certain Oil Country Tubular Goods From the People's Republic of China: Amended Final Affirmative Countervailing Duty Determination and Countervailing Duty Order,* 75 FR 3203 (January 20, 2010) (describing the subject merchandise in terms of physical characteristics without regard to use or intended use). Finally, certain Petitioners have indicated the domestic industry's intent to include multi-stenciled products that otherwise meet the physical characteristics set out in the scope. Therefore, the Department is not adopting SeAH VINA's proposed modification of the scope.

Scope of the Investigation

This investigation covers welded carbon-quality steel pipes and tube, of circular cross-section, with an outside diameter (''O.D.'') not more than 16 inches (406.4 mm), regardless of wall thickness, surface finish (*e.g.*, black, galvanized, or painted), end finish (plain end, beveled end, grooved, threaded, or threaded and coupled), or industry specification (*e.g.*, American Society for Testing and Materials International (''ASTM''), proprietary, or other) generally known as standard pipe, fence pipe and tube, sprinkler pipe, and structural pipe (although subject product may also be referred to as mechanical tubing). Specifically, the term ''carbon quality'' includes products in which: (a) Iron predominates, by weight, over each of the other contained elements; (b) the carbon content is 2 percent or less, by weight; and (c) none of the elements listed below exceeds the quantity, by weight, as indicated:

(i) 1.80 percent of manganese;
(ii) 2.25 percent of silicon;
(iii) 1.00 percent of copper;
(iv) 0.50 percent of aluminum;
(v) 1.25 percent of chromium;
(vi) 0.30 percent of cobalt;
(vii) 0.40 percent of lead;
(viii) 1.25 percent of nickel;

(ix) 0.30 percent of tungsten;
(x) 0.15 percent of molybdenum;
(xi) 0.10 percent of niobium;
(xii) 0.41 percent of titanium;
(xiii) 0.15 percent of vanadium;
(xiv) 0.15 percent of zirconium.

Subject pipe is ordinarily made to ASTM specifications A53, A135, and A795, but can also be made to other specifications. Structural pipe is made primarily to ASTM specifications A252 and A500. Standard and structural pipe may also be produced to proprietary specifications rather than to industry specifications. Fence tubing is included in the scope regardless of certification to a specification listed in the exclusions below, and can also be made to the ASTM A513 specification. Sprinkler pipe is designed for sprinkler fire suppression systems and may be made to industry specifications such as ASTM A53 or to proprietary specifications. These products are generally made to standard O.D. and wall thickness combinations. Pipe multi-stenciled to a standard and/or structural specification and to other specifications, such as American Petroleum Institute (''API'') API–5L specification, is also covered by the scope of this investigation when it meets the physical description set forth above, and also has one or more of the following characteristics: Is 32 feet in length or less; is less than 2.0 inches (50mm) in outside diameter; has a galvanized and/or painted (*e.g.*, polyester coated) surface finish; or has a threaded and/or coupled end finish.

The scope of this investigation does not include: (a) Pipe suitable for use in boilers, superheaters, heat exchangers, refining furnaces and feedwater heaters, whether or not cold drawn; (b) finished electrical conduit; (c) finished scaffolding;[1] (d) tube and pipe hollows for redrawing; (e) oil country tubular goods produced to API specifications; (f) line pipe produced to only API specifications; and (g) mechanical tubing, whether or not cold-drawn. However, products certified to ASTM mechanical tubing specifications are not excluded as mechanical tubing if they otherwise meet the standard sizes (*e.g.*, outside diameter and wall thickness) of standard, structural, fence and sprinkler pipe. Also, products made to the following outside diameter and wall thickness combinations, which are recognized by the industry as typical for fence tubing, would not be excluded from the scope based solely on their being certified to ASTM mechanical tubing specifications:

1.315 inch O.D. and 0.035 inch wall thickness (gage 20)
1.315 inch O.D. and 0.047 inch wall thickness (gage 18)
1.315 inch O.D. and 0.055 inch wall thickness (gage 17)
1.315 inch O.D. and 0.065 inch wall thickness (gage 16)
1.315 inch O.D. and 0.072 inch wall thickness (gage 15)
1.315 inch O.D. and 0.083 inch wall thickness (gage 14)
1.315 inch O.D. and 0.095 inch wall thickness (gage 13)
1.660 inch O.D. and 0.047 inch wall thickness (gage 18)
1.660 inch O.D. and 0.055 inch wall thickness (gage 17)
1.660 inch O.D. and 0.065 inch wall thickness (gage 16)
1.660 inch O.D. and 0.072 inch wall thickness (gage 15)
1.660 inch O.D. and 0.083 inch wall thickness (gage 14)
1.660 inch O.D. and 0.095 inch wall thickness (gage 13)
1.660 inch O.D. and 0.109 inch wall thickness (gage 12)
1.900 inch O.D. and 0.047 inch wall thickness (gage 18)
1.900 inch O.D. and 0.055 inch wall thickness (gage 17)
1.900 inch O.D. and 0.065 inch wall thickness (gage 16)
1.900 inch O.D. and 0.072 inch wall thickness (gage 15)
1.900 inch O.D. and 0.095 inch wall thickness (gage 13)
1.900 inch O.D. and 0.109 inch wall thickness (gage 12)
2.375 inch O.D. and 0.047 inch wall thickness (gage 18)
2.375 inch O.D. and 0.055 inch wall thickness (gage 17)
2.375 inch O.D. and 0.065 inch wall thickness (gage 16)
2.375 inch O.D. and 0.072 inch wall thickness (gage 15)
2.375 inch O.D. and 0.095 inch wall thickness (gage 13)
2.375 inch O.D. and 0.109 inch wall thickness (gage 12)
2.375 inch O.D. and 0.120 inch wall thickness (gage 11)
2.875 inch O.D. and 0.109 inch wall thickness (gage 12)
2.875 inch O.D. and 0.134 inch wall thickness (gage 10)
2.875 inch O.D. and 0.165 inch wall thickness (gage 8)
3.500 inch O.D. and 0.109 inch wall thickness (gage 12)
3.500 inch O.D. and 0.148 inch wall thickness (gage 9)
3.500 inch O.D. and 0.165 inch wall thickness (gage 8)
4.000 inch O.D. and 0.148 inch wall thickness (gage 9)
4.000 inch O.D. and 0.165 inch wall thickness (gage 8)
4.500 inch O.D. and 0.203 inch wall thickness (gage 7)

The pipe subject to this investigation is currently classifiable in Harmonized Tariff Schedule of the United States (''HTSUS'') statistical reporting numbers 7306.19.1010, 7306.19.1050, 7306.19.5110, 7306.19.5150, 7306.30.1000, 7306.30.5025, 7306.30.5032, 7306.30.5040, 7306.30.5055, 7306.30.5085, 7306.30.5090, 7306.50.1000, 7306.50.5050, and 7306.50.5070. Although the HTSUS subheadings are provided for convenience and customs purposes, the written description of the merchandise under the investigation is dispositive.

Alignment of Final Determination

On November 22, 2011, the Department initiated an AD investigation concurrent with this CVD investigation of circular welded pipe from the UAE. *See Circular Welded Carbon-Quality Steel Pipe from India, the Sultanate of Oman, the United Arab Emirates, and the Socialist Republic of Vietnam: Initiation of Antidumping Duty Investigations,* 76 FR 72164 (November 22, 2011). The scope of the merchandise being covered is the same for both the AD and CVD investigations. On March 23, 2012, Petitioners submitted a letter, in accordance with 19 CFR 351.210(b)(4)(i), requesting alignment of the final CVD determination with the final determination in the companion AD investigation. Therefore, in accordance with section 705(a)(1) of the Tariff Act of 1930, as amended (''Act'') and 19 CFR 351.210(b)(4), the final CVD determination will be issued on the same date as the final AD determination, which is currently scheduled to be issued on August 6, 2012.

Subsidies Valuation Information

Allocation Period

Under 19 CFR 351.524(d)(2), the Department presumes the allocation period for non-recurring subsidies to be the average useful life (''AUL'') of the renewable physical assets for the industry concerned, as listed in the tables of the U.S. Internal Revenue Service's (''IRS'') 1977 Class Life Asset Depreciation Range System, as updated by the U.S. Department of the Treasury. According to the updated AUL tables of the IRS, the AUL period for the relevant industry in this proceeding is 15 years. See U.S. Internal Revenue Service Publication 946 (2008), *How to Depreciate Property,* at Table B–2: Table of Class Lives and Recovery Periods. No party in this proceeding has disputed this allocation period.

[1] Finished scaffolding is defined as component parts of final, finished scaffolding that enters the United States unassembled as a ''kit.'' A ''kit'' is understood to mean a packaged combination of component parts that contain, at the time of importation, all the necessary component parts to fully assemble a final, finished scaffolding.

Attribution of Subsidies

The Department's regulations at 19 CFR 351.525(b)(6)(i) state that the Department will normally attribute a subsidy to the products produced by the corporation that received the subsidy. However, 19 CFR 351.525(b)(6)(ii) through (v) directs that the Department will attribute subsidies received by certain other companies to the combined sales of those companies if (1) cross-ownership exists between the companies, and (2) the cross-owned companies produce the subject merchandise, are a holding or parent company of the subject company, produce an input that is primarily dedicated to the production of the downstream product, or transfer a subsidy to a cross-owned company.

According to 19 CFR 351.525(b)(6)(vi), cross-ownership exists between two or more corporations where one corporation can use or direct the individual assets of the other corporation(s) in essentially the same ways it can use its own assets. This regulation states that this standard will normally be met where there is a majority voting interest between two corporations or through common ownership of two (or more) corporations. The Court of International Trade (''CIT'') has upheld the Department's authority to attribute subsidies based on whether a company could use or direct the subsidy benefits of another company in essentially the same way it could use its own subsidy benefits. *See Fabrique de Fer de Charleroi, SA* v. *United States,* 166 F. Supp. 2d 593, 600–604 (CIT 2001).

ADPICO

ADPICO stated that it is a UAE-registered limited liability company, with 51 percent ownership by a UAE national, and 49 percent ownership by a Swiss-registered company. ADPICO also stated that it has no affiliates and responded to the Department's original and supplemental questionnaires on behalf of itself.

Universal Plastic

Universal Plastic responded to the Department's original and supplemental questionnaires on behalf of itself and two affiliates: KHK Scaffolding and Formwork LLC (''KHK'') and Universal Tube and Pipe Industries LLC (''Universal Pipe'').

We preliminarily determine that Universal Plastic, KHK, and Universal Pipe are cross-owned within the meaning of 19 CFR 351.525(b)(6)(vi) by virtue of common ownership. Moreover, because KHK and Universal Pipe are also producers of subject merchandise, any subsidies received by Universal Plastic, KHK, and Universal Pipe would be attributed to the combined sales of Universal Plastic, KHK, and Universal Pipe (excluding intercompany sales), in accordance with 19 CFR 351.525(b)(6)(ii).

Analysis of Programs

Based upon our analysis of the petition and the responses to our questionnaires, we preliminarily determine the following:

I. Programs Preliminarily Determined Not To Exist

A. Profit Tax Exemptions Under UAE Federal Law No.1 of 1979 (''1979 Federal Law'')

According to the GUAE, (1) the provisions of the 1979 Federal Law that provide for profit tax exemptions were never implemented, and (2) the only entities in the UAE subject to income tax are foreign-owned banks and foreign-owned energy companies. *See* GQR at 6. Therefore, we preliminarily determine that this program does not exist.

B. Provision of Electricity for LTAR Under the 1979 Federal Law and the Gulf Cooperation Council (''GCC'') Common Industrial Regulatory Law

According to the GUAE, the provisions of the 1979 Federal Law and the GCC Common Industrial Regulatory Law that relate to the provision of electricity at incentivized rates were never implemented. *See* GQR at 4; *see also* GSR at 17. Therefore, we preliminarily determine that this program does not exist.

C. Provision of Land and/or Buildings for LTAR Under the 1979 Federal Law and the GCC Common Industrial Regulatory Law

According to the GUAE, the provisions of the 1979 Federal Law and the GCC Common Industrial Regulatory Law that relate to the provision of land and/or buildings at incentivized rates were never implemented. *See* GQR at 7; *see also* GSR at 17. Therefore, we preliminarily determine that this program does not exist.

D. Provision of Water for LTAR Under the 1979 Federal Law and the GCC Common Industrial Regulatory Law

According to the GUAE, the provisions of the 1979 Federal Law and the GCC Common Industrial Regulatory Law that relate to the provision of water at incentivized rates were never implemented. *See* GQR at 8; *see also* GSR at 17. Therefore, we preliminarily determine that this program does not exist.

E. Preferential Export Lending Under the 1979 Federal Law

According to the GUAE, the provisions of the 1979 Federal Law that relate to preferential export lending were never implemented. *See* GQR at 5. Therefore, we preliminarily determine that this program does not exist.

II. Programs Preliminarily Determined Not To Be Countervailable

A. Dubai Commodity Receipts (''DCRs'')

DCRs are negotiable warehouse receipts that are issued electronically by the Dubai Multi Commodities Center (''DMCC''), a GUAE-owned facility, to facilitate the financing of goods. Petitioners have alleged that, by virtue of the GUAE's role through DMCC, DCR-backed financing comes with an implicit government guarantee, which allows lenders to obtain lower financing costs that they could otherwise obtain outside the DMCC facility.

Beginning in 2004, the DCR platform consists of three types of parties: commodity owners (the ''originators''), warehouse keepers (the ''issuers''), and financiers. The DCR platform allows commodity owners (*i.e.*, originators) to request warehouse keepers (*i.e.*, issuers) to issue DCRs, which represent goods stored at a warehouse or vault which is managed by the issuer. Originators then ''pledge'' the receipt to financiers to obtain inventory-backed loans from the financiers. According to the GUAE, the program is open to financiers around the world, provided they are approved by the DMCC. *See* GQR at 30.

During the POI, ADPICO was the only respondent to participate in this program. *Id.* at 29. In particular, ADPICO had outstanding loans as part of its trade financing arrangements with a bank in Switzerland during the POI. *Id.* The GUAE asserts that at no point did the DMCC offer a guarantee, implicit or otherwise, on loan agreements between ADPICO and its financiers, or act as bank guarantor of the DCR platform. See GQR at Exhibit 11. Moreover, the DMCC's Rules clearly indicate that the DMCC assumes no liabilities for DCR-backed financing that may default. In relevant parts, the Rules state the following:

5.4 Liability of DMCC

5.4.1 Each DCR Member confirms that the liability of DMCC for acting as its commission agent pursuant to the Rules (including under this Clause 5) shall be limited by Clause 13 (Limitation of Liability of DMCC).

5.4.2 Each Legal Owner and each Financier acknowledges that DMCC provides close out settlement services under these Rules, and acts as commission agent for any Legal Owner, *solely for the purposes of facilitating the smooth operation of the DCR System and the efficient settlement of the liabilities of the Legal Owners and the Financiers* following a Close Out Trigger Event. *The DCR Members confirm that DMCC shall have no liability to any Legal Owner, any Financier or any other DCR Member by virtue of its appointment as commission agent for a Legal Owner* under this Clause 5 or any exercise by DMCC of its obligation to sell any DCR (or the Goods represented by that DCR) following a Close Out Trigger Event as provided for in this Clause 5.

* * * * *

13.1 Limitation of Liability

* * * * *

(b) [T]hese Rules expressly set forth all the duties of DMCC with respect to any and all matters pertinent hereto, and *shall not be interpreted so as to impose any implied duties or obligations on DMCC.* DMCC shall not be bound by the provisions of any prior agreement with any DCR Member to the extent that such prior agreement conflicts with these Rules.

See GQR at Exhibit 12 (emphases added).

In light of the above, we find that DCR-backed financing obtained by DCR holders is not subject to any guarantee, implicit or otherwise, that is provided by the government through DMCC and, thus, does not give rise to a transfer, or potential transfer, of government funds to the participants in the DCR financing facility.

Consequently, we preliminarily determine that, while ADPICO did participate in the DCR financing program, no financial contribution exists within the meaning of section 771(5)(D) of the Act. Therefore, we preliminarily determine that this program is not countervailable.

III. Programs Preliminarily Determined To Not Be Used by Respondents During the POI

A. Concessionary Lending From the Emirates Industrial Bank

In addition to investigating preferential export loans granted under the 1979 Federal Law, the Department also investigated preferential export loans extended through the Emirates Industrial Bank (now called the ''Emirates National Bank''). We preliminarily determine that none of the respondents had loans from the Emirates National Bank outstanding during the POI.

IV. Programs for Which More Information Is Required

A. Tariff Exemptions Under 1979 Federal Law and GCC Common Industrial Regulatory Law

Implemented in 1980, pursuant to the 1979 Federal Law, and subsequently available in accordance with the GCC Customs Union Agreement (2003), industrial establishments operating within the UAE may be exempted from the five percent customs duty on imports of raw materials and capital goods. *See* GQR at 9. In 2005, the GUAE issued Federal Decree No. 73, which implemented the GCC Common Industrial Regulatory Law (2004), establishing the current process for industrial companies to be eligible for, and receive, a tariff exemption. *Id.* at 4 and 11–14.

To receive this duty exemption, an industrial establishment operating with a valid industrial license applies through an online electronic processing system, known as the Duty Exemption Service. *Id.* at 11–12 and 16. This application is automatically and immediately analyzed on the basis of the information that has previously been provided by the applicant during the registration proceedings to get its industrial license, *i.e.*, the applicant is required to submit the list of all items that it intends to import to run its industrial activity upon applying for its industrial license. *Id.* at 12–14. The GUAE further states that the 1979 Federal Law and the GCC Common Industrial Regulatory Law do not apply to companies in free trade zones. *Id.* at 4. The tariff exemption program is administered by the Section of Duty Exemptions within the Directorate of Industrial Development under the Industrial Affairs Department as part of the Ministry of Economy. *Id.* at 9.

ADPICO has benefited from this program since 2002. *See* AQR at Appendix 5. Universal Plastic and the GUAE reported that Universal Plastic operates within the Jebel Ali Free Trade Zone (''JAFZ'') and, therefore, could not have benefited from any alleged subsidies under the 1979 Federal Law or the GCC Common Industrial Regulatory Law. *See* UQR at 13 and GQR at 4. However, Universal Pipe and KHK did benefit from this program.

Under Chapter Seven of the GCC Common Industrial Regulatory Law, Article (16) states that certain ''industrial projects shall have the priority of privileges and exemptions,'' and lists ''projects producing export goods'' among the activities that will benefit from the ''priority of privileges and exemptions.'' *See* GQR Exhibit 4 at page 12. We find that the Department needs additional information to better assess whether tariff exemptions provided under this program are specific within the meaning of section 771(5A) of the Act. In particular, we intend to seek information regarding the meaning of ''priority'' in this context and how it is implemented in granting tariff exemptions. We intend to seek additional information, and further address this program in a post-preliminary analysis.

B. Provision of Natural Gas for LTAR

As discussed above, new subsidy allegation questionnaires were sent to the respondents on March 26, 2012, and responses are still outstanding with respect to this program. Because we lack necessary information to make a preliminary determination at this time, we intend to address the countervailability of this program in the post-preliminary analysis.

Verification

In accordance with section 782(i)(1) of the Act, we will verify the information submitted by the respondents prior to making our final determination.

Preliminary Negative Determination

In accordance with section 703(d)(1)(A)(i) of the Act, we have calculated individual subsidy rates for ADPICO and Universal Plastic, the two mandatory producers/exporters. Section 705(c)(5)(A)(i) of the Act provides that the all others rate will generally be an amount equal to the weighted average countervailable subsidy rates established for exporters or producers individually investigated, excluding any zero or *de minimis* countervailable subsidy rates and any rates determined entirely on the basis of fact available. In this case, however, the countervailable subsidy rates for all of the individually investigated exporters or producers are zero. Section 705(c)(5)(A)(ii) of the Act provides that, when this is the case, the administering authority may use any reasonable method to establish the all others rate, including averaging the weighted average countervailable subsidy rates determined for the exporters and producers individually examined. Thus, to calculate the all others rate, we averaged the individual rates of the ADPICO and Universal Plastic. Therefore, we assigned a zero rate to all other producers and exporters.

Exporter/manufacturer	Net subsidy rate
Abu Dhabi Metal Pipes & Profiles Industries Complex LLC	Zero.
Universal Tube and Plastic Industries, Ltd.; KHK Scaffolding and Formwork LLC; and Universal Tube and Pipe Industries LLC	Zero.
All Others	Zero.

Because all of the rates are zero, we preliminarily determine that no countervailable subsidies are being provided to the production or exportation of circular welded pipe in the UAE. As such, we will not direct CBP to suspend liquidation of entries of circular welded pipe from the UAE.

ITC Notification

In accordance with section 703(f) of the Act, we will notify the ITC of our determination. In addition, we are making available to the ITC all non-privileged and non-proprietary information relating to this investigation. We will allow the ITC access to all privileged and business proprietary information in our files, provided the ITC confirms that it will not disclose such information, either publicly or under an administrative protective order, without the written consent of the Assistant Secretary for Import Administration.

In accordance with section 705(b)(3) of the Act, if our final determination is affirmative, the ITC will make its final determination within 75 days after the Department makes its final determination.

Disclosure and Public Comment

Due to the anticipated timing of verification and issuance of verification reports, case briefs for this investigation must be submitted no later than one week after the issuance of the last verification report. *See* 19 CFR 351.309(c)(i) for a further discussion of case briefs. Rebuttal briefs must be filed within five days after the deadline for submission of case briefs, pursuant to 19 CFR 351.309(d)(1). A list of authorities relied upon, a table of contents, and an executive summary of issues should accompany any briefs submitted to the Department. Executive summaries should be limited to five pages total, including footnotes. *See* 19 CFR 351.309(c)(2) and (d)(2).

Section 774 of the Act provides that the Department will hold a public hearing to afford interested parties an opportunity to comment on arguments raised in case or rebuttal briefs, provided that such a hearing is requested by an interested party. If a request for a hearing is made in this investigation, the hearing will be held two days after the deadline for submission of the rebuttal briefs, pursuant to 19 CFR 351.310(d), at the U.S. Department of Commerce, 14th Street and Constitution Avenue NW., Washington, DC 20230. Parties should confirm by telephone the time, date, and place of the hearing 48 hours before the scheduled time.

Interested parties who wish to request a hearing, or to participate if one is requested, must electronically submit a written request to the Assistant Secretary for Import Administration using IA ACCESS, within 30 days of the publication of this notice, pursuant to 19 CFR 351.310(c). Requests should contain: (1) The party's name, address, and telephone; (2) the number of participants; and (3) a list of the issues to be discussed. Oral presentations will be limited to issues raised in the briefs. *Id.*

This determination is published pursuant to sections 703(f) and 777(i) of the Act.

Dated: March 26, 2012.

Paul Piquado,

Assistant Secretary for Import Administration.

[FR Doc. 2012–7746 Filed 3–29–12; 8:45 am]

BILLING CODE 3510–DS–P

DEPARTMENT OF COMMERCE

National Institute of Standards and Technology

Advisory Committee on Earthquake Hazards Reduction Meeting

AGENCY: National Institute of Standards and Technology, Department of Commerce.

ACTION: Notice of open meeting.

SUMMARY: The Advisory Committee on Earthquake Hazards Reduction (ACEHR or Committee), will hold a meeting via teleconference on Friday, April 20, 2012 from 1 p.m. to 3 p.m. Eastern Time. The primary purpose of this meeting is to develop the Committee's draft annual report to the NIST Director. Any draft meeting materials will be posted on the NEHRP Web site at *http://nehrp.gov/.* Interested members of the public will be able to participate in the meeting from remote locations by calling into a central phone number.

DATES: The ACEHR will hold a meeting via teleconference on Friday, April 20, 2012, from 1 p.m. until 3 p.m. Eastern Time.

ADDRESSES: Questions regarding the meeting should be sent to National Earthquake Hazards Reduction Program Director, National Institute of Standards and Technology, 100 Bureau Drive, Mail Stop 8604, Gaithersburg, Maryland 20899–8604. For instructions on how to participate in the meeting, please see the **SUPPLEMENTARY INFORMATION** section of this notice.

FOR FURTHER INFORMATION CONTACT: Dr. Jack Hayes, National Earthquake Hazards Reduction Program Director, National Institute of Standards and Technology, 100 Bureau Drive, Mail Stop 8604, Gaithersburg, Maryland 20899–8604. Dr. Hayes' email address is *jack.hayes@nist.gov* and his phone number is (301) 975–5640.

SUPPLEMENTARY INFORMATION: The Committee was established in accordance with the requirements of Section 103 of the NEHRP Reauthorization Act of 2004 (Pub. L. 108–360). The Committee is composed of 12 members appointed by the Director of NIST, who were selected for their technical expertise and experience, established records of distinguished professional service, and their knowledge of issues affecting the National Earthquake Hazards Reduction Program. In addition, the Chairperson of the U.S. Geological Survey (USGS) Scientific Earthquake Studies Advisory Committee (SESAC) serves in an ex-officio capacity on the Committee. The Committee assesses:

- Trends and developments in the science and engineering of earthquake hazards reduction;
- The effectiveness of NEHRP in performing its statutory activities (improved design and construction methods and practices; land use controls and redevelopment; prediction techniques and early-warning systems; coordinated emergency preparedness plans; and public education and involvement programs);
- Any need to revise NEHRP; and
- The management, coordination, implementation, and activities of NEHRP.

Background information on NEHRP and the Advisory Committee is available at *http://nehrp.gov/.*

Pursuant to the Federal Advisory Committee Act, 5 U.S.C. app., notice is

hereby given that the ACEHR will hold a meeting via teleconference on Friday, April 20, 2012, from 1 p.m. until 3 p.m. Eastern Time. There will be no central meeting location. Interested members of the public will be able to participate in the meeting from remote locations by calling into a central phone number. The primary purpose of this meeting is to develop the Committee's draft annual report to the NIST Director. Any draft meeting materials will be posted on the NEHRP Web site at *http://nehrp.gov/.*

Individuals and representatives of organizations who would like to offer comments and suggestions related to the Committee's affairs are invited to request detailed instructions by contacting Michelle Harman on how to dial in from a remote location to participate in the meeting. Michelle Harman's email address is *michelle.harman@nist.gov,* and her phone number is 301–975–5324. Approximately fifteen minutes will be reserved from 2:45 p.m.–3 p.m. Eastern Time for public comments; speaking times will be assigned on a first-come, first-serve basis. The amount of time per speaker will be determined by the number of requests received, but is likely to be about 3 minutes each. Questions from the public will not be considered during this period. Speakers who wish to expand upon their oral statements, those who had wished to speak but could not be accommodated, and those who were unable to participate are invited to submit written statements to the ACEHR, National Institute of Standards and Technology, 100 Bureau Drive, MS 8604, Gaithersburg, Maryland 20899–8604, via fax at (301) 975–5433, or electronically by email to *info@nehrp.gov.*

All participants of the meeting are required to pre-register. Anyone wishing to participate must register by close of business Friday, April 13, 2012, in order to be included. Please submit your name, email address, and phone number to Michelle Harman. After registering, participants will be provided with detailed instructions on how to dial in from a remote location in order to participate. Michelle Harman's email address is *michelle.harman@nist.gov,* and her phone number is (301) 975–5324.

Dated: March 21, 2012.

Willie E. May,

Associate Director for Laboratory Programs.

[FR Doc. 2012–7480 Filed 3–29–12; 8:45 am]

BILLING CODE 3510–13–P

DEPARTMENT OF COMMERCE

National Oceanic and Atmospheric Administration

RIN 0648–XB114

Notice of Availability of Draft Documents for Public Comment Related to a Fishery Conservation Plan and Research Permits for the Washington State Department of Fish and Wildlife

AGENCY: National Marine Fisheries Service (NMFS), National Oceanic and Atmospheric Administration (NOAA), Commerce.

ACTION: Notice.

SUMMARY: The Washington State Department of Fish and Wildlife (WDFW) has submitted applications to NMFS for four scientific research permits and one incidental take permit (Permits) under the Endangered Species Act of 1973, as amended (ESA). We prepared a draft Environmental Assessment (EA) to support permit-issuance decisions. As required by the ESA, WDFW has also prepared a Conservation Plan (Plan) designed to minimize and mitigate any such take of endangered or threatened species. The Permit applications are related to scientific research and fisheries management measures in waters of the Puget Sound/Georgia Basin, Washington. The research permits and fishery permit and the Plan each have a proposed term of 5 years.

We request comments from the public on the draft EA, the proposed Plan and associated applications. All comments received will become part of the public record.

DATES: Written comments on the draft EA and proposed Plan and associated applications must be received on or before April 23, 2012.

ADDRESSES: Address all written comments to: Dan Tonnes, National Marine Fisheries Service, 7600 Sand Point Way NE., Building Number 1, Seattle, WA 98115–6349, facsimile (206) 526–6426. Comments may be submitted by email to the following address: *WDFWEA.nwr@noaa.gov.* In the subject line of the email, include the Document identifier: WDFW EA. Comments and materials received will be available for public inspection, by appointment, during normal business hours at the office listed in the **ADDRESSES** section of this notice.

FOR FURTHER INFORMATION CONTACT: Dan Tonnes, National Marine Fisheries Service, 7600 Sand Point Way NE., Building Number 1, Seattle, WA 98115–6349, facsimile (206) 526–6426, phone (206) 526–4643, email: *Dan.Tonnes@noaa.gov.*

SUPPLEMENTARY INFORMATION:

Statutory Authority

Section 9 of the ESA and its implementing Federal regulations prohibit the taking of a species listed as endangered or threatened. The term ''take'' is defined under the ESA to mean harass, harm, pursue, hunt, shoot, wound, kill, trap, capture, or collect, or to attempt to engage in any such conduct (16 U.S.C. 1532(19). ''Harm'' is defined to include significant habitat modification or degradation where it actually kills or injures wildlife by significantly impairing essential behavioral patterns, including breeding, feeding, and sheltering (64 FR 60727, November 8, 1999). ''Harass'' is defined as an intentional or negligent act or omission which creates the likelihood of injury to wildlife by annoying it to such an extent as to significantly disrupt normal behavioral patterns including breeding, feeding, and sheltering.

NMFS may issue permits, under limited circumstances, to allow the take of listed species incidental to, and not the purpose of, otherwise lawful activities, and for scientific research. NMFS proposes to issue four research permits pursuant to section 10(a)(1)(A) and one incidental take permit pursuant to section 10(a)(1)(B) of the ESA. NMFS regulations governing permits for threatened and endangered species are at 50 CFR 222.307.

Background

Fisheries within portions of the Puget Sound/Georgia Basin are managed by the WDFW. ESA-listed yelloweye rockfish (*Sebastes ruberrimus*), canary rockfish (*Seb. pinniger*), and bocaccio (*Seb. paucispinis*) and threatened Puget Sound Chinook salmon (*Oncorhyncus tshawytscha*) are incidentally caught in the commercial shrimp trawl fishery and the recreational bottom fish fishery authorized by the state. The threatened southern DPS of eulachon (*Thaleichthys pacificus*) and threatened southern DPS of North American green sturgeon (*Acipenser medirostris*) can be incidentally caught in the commercial shrimp trawl fishery that occur in the Puget Sound/Georgia Basin. WDFW conducts scientific research in the Puget Sound/Georgia Basin that takes ESA-listed rockfish, the threatened Evolutionarily Significant Units (ESUs) of Puget Sound Chinook salmon and Hood Canal summer-run chum salmon (*O. keta*), the DPSs of threatened Puget Sound steelhead (*O. mykiss*), southern

North American green sturgeon, and southern eulachon. The Permit applications WDFW submitted to NMFS address the potential take these listed species.

On April 27, 2010, NMFS listed the Puget Sound/Georgia Basin Distinct Population Segments (DPSs) of yelloweye rockfish, and canary rockfish, as threatened, and bocaccio as endangered species under the ESA (75 FR 22276). Prior to the listing, WDFW initiated discussions with NMFS to pursue ESA compliance for state authorized fisheries and research activities that are likely to incidentally encounter ESA-listed rockfish within state waters of the DPSs. NMFS has provided assistance to the WDFW in development of a Conservation Plan and an application for an incidental take permit (ITP) for ESA-listed rockfish and other species likely to be affected by several state-authorized fisheries and state-conducted research efforts.

The draft EA analyzes three alternatives. In the no-action alternative NMFS would not issue research permits or incidental take permit, and WDFW would close the the commercial shrimp trawl fishery and the recreational bottom fish fishery, and no longer conduct certain research. In the proposed alternative NMFS would issue all four research permits, and the fisheries permit. The fishery permit would be issued with additional protections to limit and track take of listed fish. In the third alternative NMFS would issue all four research permits and the fishery permit. The fishery permit would include less fisheries restrictions and would result in greater take numbers of ESA-listed rockfish. NMFS's proposed action is to issue the four research permits and the fisheries permit that include protections to further reduce and track take of listed fish.

NMFS will evaluate the applications, associated documents, and comments submitted to determine whether the applications meet requirements of the ESA and NEPA. We will then prepare the final EA. Our decisions of whether to issue an incidental take permit and scientific research permits will be made upon completion of the final EA and the ESA determination.

Document Availability

The documents are available electronically on the World Wide Web at *http://www.nwr.noaa.gov.*

Dated: March 21, 2012.

Larissa Plants,

Acting Chief, Endangered Species Division, Office of Protected Resources, National Marine Fisheries Service.

[FR Doc. 2012–7599 Filed 3–29–12; 8:45 am]

BILLING CODE 3510–22–P

DEPARTMENT OF COMMERCE

National Oceanic and Atmospheric Administration

RIN 0648–XB043

Identification of Nations Whose Fishing Vessels Are Engaged in Illegal, Unreported, or Unregulated Fishing

AGENCY: National Marine Fisheries Service (NMFS), National Oceanic and Atmospheric Administration (NOAA), Commerce.

ACTION: Request for information.

SUMMARY: NMFS is seeking information regarding nations whose vessels are engaged in illegal, unreported, or unregulated (IUU) fishing, bycatch of protected living marine resources (PLMRs), and/or fishing activities in waters beyond any national jurisdiction that target or incidentally catch sharks. Such information will be reviewed for the purposes of the identification of nations pursuant to the High Seas Driftnet Fishing Moratorium Protection Act (Moratorium Protection Act).

DATES: Information should be received on or before April 30, 2012.

ADDRESSES: Information should be submitted to NMFS Office of International Affairs, Attn.: MSRA Information, 1315 East-West Highway, Silver Spring, MD 20910. Email address: *IUU.PLMR.Sharks@noaa.gov* or fax (301) 713–2313.

FOR FURTHER INFORMATION CONTACT: Kristin Rusello, 301–427–8376.

SUPPLEMENTARY INFORMATION: The Magnuson-Stevens Fishery Conservation and Management Reauthorization Act of 2006 (MSRA) amended the Moratorium Protection Act (16 U.S.C.1826d–k) to require actions be taken by the United States to strengthen international fishery management organizations and address IUU fishing and bycatch of PLMRs. The Shark Conservation Act of 2010 (S.850) further amended the Moratorium Protection Act by requiring that actions be taken by the United States to strengthen shark conservation.

Specifically, the Moratorium Protection Act requires the Secretary of Commerce (Secretary) to identify in a biennial report to Congress those nations whose fishing vessels are engaged, or have been engaged at any point during the preceding two years, in IUU fishing. In this context, IUU fishing is defined (16 U.S.C. 1826j; 50 CFR 300.200–201) as:

(1) Fishing activities that violate conservation and management measures required under an international fishery management agreement to which the United States is a party, including catch limits or quotas, capacity restrictions, and bycatch reduction requirements;

(2) Overfishing of fish stocks shared by the United States, for which there are no applicable international conservation or management measures or in areas with no applicable international fishery management organization or agreement, that has adverse impacts on such stocks; and

(3) Fishing activity that has an adverse impact on seamounts, hydrothermal vents, and cold water corals located beyond national jurisdiction, for which there are no applicable conservation or management measures or in areas with no applicable international fishery management organization or agreement.

In addition, the Secretary must identify in the biennial report those nations whose fishing vessels are engaged, or have been engaged in the previous calendar year in fishing activities either (1) in waters beyond any national jurisdiction that result in bycatch of a PLMR, or (2) beyond the U.S. exclusive economic zone (EEZ) that result in bycatch of a PLMR shared by the United States. In this context, PLMRs are defined as non-target fish, sea turtles, sharks, or marine mammals that are protected under U.S. law or international agreement, including the Marine Mammal Protection Act, the Endangered Species Act, the Shark Finning Prohibition Act, and the Convention on International Trade in Endangered Species of Wild Flora and Fauna. PLMRs do not include species, except sharks, managed under the Magnuson-Stevens Fishery Conservation and Management Act, the Atlantic Tunas Convention Act, or any international fishery management agreement. A list of species considered as PLMRs for this purpose is available online at: *http://www.nmfs.noaa.gov/msa2007/docs/list_of_protected_lmr_act_022610.pdf.*

Furthermore, the Shark Conservation Act requires that the Secretary of Commerce identify nations in a biennial report to Congress whose fishing vessels are engaged, or have been engaged during the calendar year previous to the biennial report in fishing activities or practices in waters beyond any national

jurisdiction that target or incidentally catch sharks and the nation has not adopted a regulatory program to provide for the conservation of sharks, including measures to prohibit removal of any of the fins of a shark (including the tail) and discarding the carcass of the shark at sea, that is comparable to that of the United States, taking into account different conditions.

The second biennial report to Congress was submitted in January 2011 and is available online at *http://www.nmfs.noaa.gov/msa2007/docs/biennia_report_to_congress.pdf.* The report identified six nations for IUU fishing.

The Moratorium Protection Act also requires the Secretary to establish procedures to certify whether each nation identified in the biennial report is taking the necessary actions to address IUU fishing, bycatch of PLMRs, and/or shark catch. If an identified nation fails to take such action and therefore fails to receive a positive certification, the fishing vessels of that nation would be subject to trade restrictive measures under the High Seas Driftnet Fisheries Enforcement Act (16 U.S.C. 1826a). Such measures could include denial of entry into U.S. ports and import prohibitions on certain fisheries products. On January 12, 2011, NMFS published a final rule (76 FR 2011) to implement both the identification and certification procedures for IUU fishing and bycatch of PLMRs. That final rule is available online at *http://www.gpo.gov/fdsys/pkg/FR-2011-01-12/pdf/2011-507.pdf.* The rule provides information regarding the identification process and how the information received will be used in that process.

In fulfillment of its requirements under the Moratorium Protection Act, NMFS is preparing the third biennial report to Congress, which will identify nations whose fishing vessels are engaged in IUU fishing or fishing practices that result in bycatch of PLMRs or shark catch in waters beyond any national jurisdiction without a regulatory program comparable to the United States. NMFS is soliciting information from the public that could assist in its identification of nations engaged in activities that meet the criteria described above for IUU fishing, PLMR bycatch, or shark catch in waters beyond any national jurisdiction. Some types of information that may prove useful to NMFS include:

- Documentation (photographs, etc.) of IUU activity or fishing vessels engaged in PLMR bycatch or catch of sharks on the high seas;
- Fishing vessel records;
- Trade data supporting evidence that a nation's vessels are engaged in shark catch;
- Reports from off-loading facilities, port-side government officials, enforcement agents, military personnel, port inspectors, transshipment vessel workers and fish importers;
- Sightings of vessels on RFMO IUU vessel lists;
- RFMO catch documents and statistical document programs;
- Nation's domestic regulations for bycatch and shark conservation and management;
- Appropriate certification programs;
- Action or inaction at the national level, resulting in non-compliance with RFMO conservation and management measures, such as exceeding quotas or catch limits, or failing to report or misreporting data of the nation's fishing activities; and
- Reports from governments, international organizations, or nongovernmental organizations.

NMFS will consider all available information, as appropriate, when making a determination whether or not to identify a particular nation in the biennial report to Congress. As stated previously, NMFS is limited in the data it may use as the basis of a nation's identification. This information includes IUU fishing activity in 2011 and 2012, bycatch of PLMRs in 2012, and shark fishing activity in waters beyond any national jurisdiction in 2012. Information should be as specific as possible as this will assist NMFS in its review. NMFS will consider several criteria when determining whether information is appropriate for use in making identifications, including:

- Corroboration of information;
- Whether multiple sources have been able to provide information in support of an identification;
- The methodology used to collect the information;
- Specificity of the information provided;
- Susceptibility of the information to falsification and alteration; and
- Credibility of the individuals or organization providing the information.

Dated: March 26, 2012.

Cheri McCarty,

Acting Director, Office of International Affairs, National Marine Fisheries Service.

[FR Doc. 2012–7718 Filed 3–29–12; 8:45 am]

BILLING CODE 3510–22–P

DEPARTMENT OF COMMERCE

National Oceanic and Atmospheric Administration

RIN 0648–XB130

Gulf of Mexico Fishery Management Council; Public Meetings

AGENCY: National Marine Fisheries Service (NMFS), National Oceanic and Atmospheric Administration (NOAA), Commerce.

ACTION: Notice of public meetings.

SUMMARY: The Gulf of Mexico Fishery Management Council (Council) will convene a public meeting.

DATES: The meeting will be held April 16–19, 2012.

ADDRESSES: The meeting will be held at the Omni Bayfront Hotel, 900 N. Shoreline Boulevard, Corpus Christi, TX 78401; telephone: (361) 887–1600.

Council address: Gulf of Mexico Fishery Management Council, 2203 North Lois Avenue, Suite 1100, Tampa, FL 33607.

FOR FURTHER INFORMATION CONTACT: Dr. Stephen Bortone, Executive Director, Gulf of Mexico Fishery Management Council; telephone: (813) 348–1630.

SUPPLEMENTARY INFORMATION:

Committees

Monday, April 16, 2012

1 p.m.–2 p.m.—Scientific & Statistical Committee (SSC) Selection Committee will discuss duties and responsibilities of the SSC and receive a presentation on Detailed ''Option 3''.

2 p.m.–3 p.m.—Budget/Personnel Committee will review the Executive Director's Evaluation Process, the 2012 Proposed Budget and an Overview of Future Funding.

3 p.m.–4 p.m.—Outreach and Education Committee will review the Crisis Communication Plan and receive an update on the Stakeholder's Survey.

4 p.m.–4:30 p.m.—Artificial Reef Committee will discuss Artificial Reefs as Essential Fish Habitat.

4:30 p.m.–5:30 p.m.—Budget/Personnel Committee—Full Council (CLOSED SESSION)

—Recess—

Tuesday, April 17, 2012

8:30 a.m.–12 noon and 1:30 p.m.—5:30 p.m.—Reef Fish Management Committee will meet to discuss the Update of the Red Snapper 5-Year IFQ Review; review Scoping Documents for Amendment 28—

Grouper Allocation and Amendment 33—Limited Access Privilege Program; take Final Action on Amendment 35—Greater Amberjack; review a Scoping Document for Red Snapper Provisions for Overage Adjustments; discuss an Interim Rule on Gray Triggerfish Annual Catch Limit & In-Season Closure Authority; review a Draft Options Paper for Amendment 37—Gray Triggerfish Management Measures; discuss a Framework Action on Contractual Services for the For-Hire Sector; discuss Sector Separation; review an Options Paper for Amendment 38—Revise Post-Season Recreational Accountability Measures for Shallow-water Grouper; receive a summary from the Goliath Grouper Workgroup Meeting and review and discuss the Pilot Studies Design for Headboat IFQ and Days at Sea.

—Recess—

Immediately following the Committee Recess will be the Informal Question & Answer Session on Gulf of Mexico Fishery Management Issues.

Wednesday, April 18, 2012

8:30 a.m.–9 a.m.—The Coral Management Committee will review a report from the Special Coral Scientific & Statistical Committee.

9 a.m.–10 a.m.—The Data Collection Committee will review the MRIP Calibration Workshop summary; discuss a Generic Amendment for Dealer Permit/Electronic Logbook Reporting Requirements; receive an update on Electronic Reporting for Headboats and for the For-Hire Sector.

10 a.m.–11:30 a.m.—The Mackerel Management Committee will review Options Papers for Amendment 19—No Sale and Permits and for Amendment 20—Boundaries and Transit Provisions.

—Recess—

Council

Wednesday, April 18, 2012

1 p.m.—The Council meeting will begin with a Call to Order and Introductions.

1:05 p.m.–1:15 p.m.—The Council will review the agenda and approve the minutes.

1:15 p.m.–1:45 p.m.—The Council will approve a revised Committee Roster; review the Action Schedule; and review Exempted Fishing Permits (EFP), if any.

1:45 p.m.–5:30 p.m.—The Council will receive public testimony on Final Reef Fish Amendment 35—Greater Amberjack; an Interim Rule for Gray Triggerfish Annual Catch Limit & In-Season Closure Authority; and exempted fishing permits (EFPs), if any. The Council will also hold an open public comment period regarding any other fishery issues of concern. People wishing to speak before the Council should complete a public comment card prior to the comment period.

Thursday, April 19, 2012

8:30 a.m.–3 p.m.—The Council will review and discuss reports from the committee meetings as follows: Scientific & Statistical Committee Selection, Outreach & Education, Reef Fish, Budget/Personnel, Artificial Reef, Coral, Data Collection, and Mackerel.

3 p.m.–3:15 p.m.—Discussion on Exempted Fishing Permits (if any) will take place.

3:15 p.m.–3:45 p.m.—Other Business items will follow.

The Council will conclude its meeting at approximately 3:45 p.m.

Although other non-emergency issues not on the agendas may come before the Council and Committees for discussion, in accordance with the Magnuson-Stevens Fishery Conservation and Management Act (Magnuson-Stevens Act), those issues may not be the subject of formal action during these meetings. Actions of the Council and Committees will be restricted to those issues specifically identified in the agendas and any issues arising after publication of this notice that require emergency action under Section 305(c) of the Magnuson-Stevens Act, provided the public has been notified of the Council's intent to take action to address the emergency.

The established times for addressing items on the agenda may be adjusted as necessary to accommodate the timely completion of discussion relevant to the agenda items. In order to further allow for such adjustments and completion of all items on the agenda, the meeting may be extended from, or completed prior to the date/time established in this notice.

Special Accommodations

These meetings are physically accessible to people with disabilities. Requests for sign language interpretation or other auxiliary aids should be directed to Kathy Pereira at the Council (see **ADDRESSES**) at least 5 working days prior to the meeting.

Dated: March 27, 2012.

Tracey L. Thompson,

Acting Director, Office of Sustainable Fisheries, National Marine Fisheries Service.

[FR Doc. 2012–7659 Filed 3–29–12; 8:45 am]

BILLING CODE 3510–22–P

DEPARTMENT OF COMMERCE

National Oceanic and Atmospheric Administration

RIN 0648–XB137

New England Fishery Management Council; Public Meeting

AGENCY: National Marine Fisheries Service (NMFS), National Oceanic and Atmospheric Administration (NOAA), Commerce.

ACTION: Notice; public meeting.

SUMMARY: The New England Fishery Management Council's (Council) Groundfish Committee will meet to consider actions affecting New England fisheries in the exclusive economic zone (EEZ).

DATES: The meeting will be held on Wednesday, April 18, 2012 at 9 a.m.

ADDRESSES: The meeting will be held at the Holiday Inn by the Bay, 88 Spring Street, Portland, ME 04101; telephone: (207) 775–2311; fax: (207) 772–4017.

Council address: New England Fishery Management Council, 50 Water Street, Mill 2, Newburyport, MA 01950.

FOR FURTHER INFORMATION CONTACT: Paul J. Howard, Executive Director, New England Fishery Management Council; telephone: (978) 465–0492.

SUPPLEMENTARY INFORMATION: The items of discussion in the committee's agenda are as follows:

The Groundfish Committee will meet to continue development of several management actions. The Committee will continue development of an action to modify measures that apply to sectors. This discussion is expected to focus primarily on monitoring issues, and may include discussion of Annual Catch Entitlement (ACE) carryover provisions and other measures relevant to sector operations. The Committee will discuss an action to establish acceptable biological catches (ABCs) and annual catch limits (ACLs) for fishing years 2013 and 2014. Setting ABCs/ACLs may require modification of recreational fishing measures, and the Committee may discuss this issue. The Committee may also discuss adopting additional sub-ACLs for the scallop fishery and pursuing the Mixed Stock Exception for SNE/MA windowpane flounder. The Committee may discuss

possible modifications to groundfish closed areas and the recent Endangered Species Act listing of Atlantic Sturgeon.

Other business may also be discussed.

Although non-emergency issues not contained in this agenda may come before this group for discussion, those issues may not be the subject of formal action during this meeting. Action will be restricted to those issues specifically identified in this notice and any issues arising after publication of this notice that require emergency action under section 305(c) of the Magnuson-Stevens Fishery Conservation and Management Act, provided the public has been notified of the Council's intent to take final action to address the emergency.

Special Accommodations

This meeting is physically accessible to people with disabilities. Requests for sign language interpretation or other auxiliary aids should be directed to Paul J. Howard (see **ADDRESSES**) at least 5 days prior to the meeting date.

Authority: 16 U.S.C. 1801 *et seq.*

Dated: March 27, 2012.

Tracey L. Thompson,

Acting Director, Office of Sustainable Fisheries, National Marine Fisheries Service.

[FR Doc. 2012–7661 Filed 3–29–12; 8:45 am]

BILLING CODE 3510–22–P

DEPARTMENT OF COMMERCE

National Oceanic and Atmospheric Administration

RIN 0648–XB136

Fisheries of the South Atlantic; South Atlantic Fishery Management Council; Public Meetings

AGENCY: National Marine Fisheries Service (NMFS), National Oceanic and Atmospheric Administration (NOAA), Commerce.

ACTION: Notice.

SUMMARY: The South Atlantic Fishery Management Council will hold meetings of its: Snapper Grouper AP; Joint Shrimp and Deepwater Shrimp AP; Dolphin Wahoo AP; King and Spanish Mackerel AP; and Coral AP in North Charleston, SC. An MPA Workshop will be held in conjunction with the Snapper Grouper AP meeting. All meetings are open to the public. See **SUPPLEMENTARY INFORMATION**.

DATES: The meetings will take place from April 18–May 10, 2012. See **SUPPLEMENTARY INFORMATION**.

ADDRESSES: The meetings will be held at the Hilton Garden Inn, 5265 International Blvd., North Charleston, SC 29418; telephone: (843) 308–9330; fax: (843) 308–9331.

Copies of documents are available from Kim Iverson, Public Information Officer, South Atlantic Fishery Management Council, 4055 Faber Place Drive, Suite 201, North Charleston, SC 29405.

FOR FURTHER INFORMATION CONTACT: Kim Iverson, Public Information Officer; telephone: (843) 571–4366 or toll free at (866) SAFMC–10; fax: (843) 769–4520; email: *kim.iverson@safmc.net.*

SUPPLEMENTARY INFORMATION:

Meeting Dates

1. Snapper Grouper AP Meeting: April 18–19, 2012

Members of the Snapper Grouper AP will meet from 9 a.m.–5 p.m. on April 18, 2012 and from 9 a.m.–4 p.m. on April 19, 2012. The AP will receive an update on recent amendments, including Snapper Grouper Amendment 24 (red grouper), Snapper Grouper Amendment 18A (black sea bass), Regulatory Amendment 11 (removal of 240 foot closure), Regulatory Amendment 12 (golden tilefish) and Snapper Grouper Amendment 20A (wreckfish). The AP will discuss developing amendments, including: Snapper Grouper Amendment 18B, which includes measures to implement an endorsement program for the commercial golden tilefish fishery; and Snapper Grouper Amendment 20, which addresses the current Individual Transferable Quota (ITQ) program for wreckfish. In addition, the AP will review proposed measures in Comprehensive Ecosystem-Based Amendment 3 including options to create and/or expand existing marine protected areas to help provide protection for speckled hind and Warsaw grouper. The AP will provide recommendations to the Council for consideration.

2. Marine Protected Area (MPA) Workshop: April 18, 2012

The Council will host an MPA Workshop for the public beginning at 6 p.m. in order to solicit input regarding the use of MPAs to reduce bycatch mortality associated with speckled hind and Warsaw grouper.

3. Joint Shrimp AP and Deepwater Shrimp AP Meeting: April 20, 2012

Members of the Joint Shrimp and Deepwater Shrimp AP will meet from 8:30 a.m. until 4 p.m. The APs will review measures in Shrimp Amendment 9 that include revising the Minimum Stock Size Threshold (MSST) proxy for pink shrimp and streamlining the concurrent closure process of penaeid shrimp fisheries. Members will receive a briefing on issues related to Atlantic sturgeon which were recently listed as endangered. The APs will also review options and provide recommendations for expansion of Deepwater Coral Habitat Areas of Particular Concern (HAPC) as included in the Comprehensive Ecosystem-Based Amendment.

4. Dolphin Wahoo AP Meeting: April 24, 2012

Members of the Dolphin Wahoo AP will meet from 8:30 a.m. until 12 noon. The AP will review revised numbers for recreational landings of dolphin and wahoo through the Marine Recreational Information Program and discuss allocation issues.

5. King and Spanish Mackerel AP Meeting: April 24–25, 2012

Members of the King and Spanish Mackerel AP will meet from 1:30 p.m. on April 24, 2012 until 4 p.m. on April 25, 2012. The AP will receive updates on amendments and assessments, including: Mackerel Amendment 18, which establishes Annual Catch Limits and Accountability Measures for mackerel and cobia; and the recent stock assessment of Spanish mackerel and cobia. The AP will discuss developing amendments, including Mackerel Amendment 19 addressing permits and sale of bag-limit mackerel and cobia, and Amendment 20 addressing boundaries and transit provisions. The AP will also review a list of framework items and provide recommendations.

6. Coral AP Meeting: May 9–10, 2012

Members of the Coral AP will meet from 9 a.m. until 5 p.m. on May 9, 2012 and from 8:30 a.m. until 12 noon on May 10, 2012. The AP will review alternatives for expansion of Deepwater Coral HAPCs as included in the draft Comprehensive Ecosystem-Based Amendment 3. The AP will also receive an update from NOAA Fisheries Habitat Conservation Division, an overview of the Florida Reef Managers Meeting, and an update on exotic species. The AP will appoint a chair, elect a vice-chair and will provide recommendations to the Council for consideration.

Although non-emergency issues not contained in this agenda may come before these groups for discussion, those issues may not be the subject of formal action during these meetings. Action will be restricted to those issues specifically listed in this notice and any issues arising after publication of this notice that require emergency action under section 305(c) of the Magnuson-

Stevens Fishery Conservation and Management Act, provided the public has been notified of the Council's intent to take final action to address the emergency.

Special Accommodations

These meetings are physically accessible to people with disabilities. Requests for sign language interpretation or other auxiliary aids should be directed to the Council office (see **ADDRESSES**) 3 days prior to the meeting.

Note: The times and sequence specified in this agenda are subject to change.

Dated: March 27, 2012.

Tracey L. Thompson,

Acting Director, Office of Sustainable Fisheries, National Marine Fisheries Service.

[FR Doc. 2012–7662 Filed 3–29–12; 8:45 am]

BILLING CODE 3510–22–P

DEPARTMENT OF COMMERCE

National Oceanic and Atmospheric Administration

RIN 0648–XB133

Western Pacific Fishery Management Council; Public Meetings

AGENCY: National Marine Fisheries Service (NMFS), National Oceanic and Atmospheric Administration (NOAA), Commerce.

ACTION: Notice of public meetings.

SUMMARY: The Western Pacific Fishery Management Council (Council) will hold meetings of its Joint Marianas and American Samoa Archipelago Plan Team (Joint PT) and Hawaii and Pacific Remote Island Area Archipelago Plan Team (HI–PRIA PT) to review the status of the nearshore fisheries, data collection issues and improvements, improvements in the Annual Catch Limit specifications, and developing Cooperative Research Priorities.

DATES: The Joint PT meeting will be held on April 16–18, 2012 and the HI–PRIA PT on April 19–20, 2012. For specific times and agendas, see **SUPPLEMENTARY INFORMATION**.

ADDRESSES: The Joint PT and HI–PRIA PT meetings will be held at the Council office, 1164 Bishop Street, Suite 1400, Honolulu, HI 96813; telephone: (808) 522–8220.

FOR FURTHER INFORMATION CONTACT: Kitty M. Simonds, Executive Director; telephone: (808) 522–8220.

SUPPLEMENTARY INFORMATION: Public comment periods will be provided. The order in which agenda items are addressed may change. The meetings will run as late as necessary to complete scheduled business.

Schedule and Agenda for the Joint PT Meeting

April 16, 2012—1 p.m.–5 p.m.

1. Welcome and Introductions.
2. Approval of the Agenda.
3. Assignment of Rapporteurs.
4. Guiding Principles for Development of Effective Fishery Monitoring Programs.
5. Evaluation of data collection programs in the Western Pacific.
6. Improving fishery data collections and status reporting.
A. Summary of the Fishery Data Collection Improvement Workshop.
B. Update on Status of Fishery Data Collection Improvement Actions.
C. Data collection in military installations in Guam.
D. Discussion on the fishery characterization based on creel survey performance.

April 17, 2012—8:30 a.m.–5 p.m.

7. Review of the Status of the Western Pacific Insular Fisheries.

A. American Samoa

i. Coral reef and crustacean fisheries.
ii. Bottomfish fisheries.
iii. Precious corals fishery and coral reef habitat status.
iv. Update on Bio-Sampling Program data summary.
v. Non-stock related factors affecting Catch Per Unit Effort (CPUE) in the coral reef fisheries.
vi. Estimation of non-commercial landings.
vii. Administrative and regulatory updates.
viii. Discussions.

B. Commonwealth of Northern Mariana Islands

i. Coral reef fisheries.
ii. Bottomfish fisheries.
iii. Crustacean and precious coral fisheries.
iv. Coral reef habitat status.
v. Update on Bio-Sampling Program and Spearfishing Market-flow project.
vi. Estimation of non-commercial landings.
vii. Administrative and regulatory updates.
viii. Discussions.

C. Guam

i. Coral reef fisheries.
ii. Bottomfish fisheries.
iii. Crustacean fisheries.
iv. Precious corals fishery and coral reef habitat status.
v. Update on Bio-Sampling Program Data Summary.
vi. Estimation of non-commercial landings.
vii. Administrative and regulatory updates.
viii. Discussions.

8. Format and information needs for the Annual Report Modules.
9. Improving Annual Catch Limit (ACL) specifications.
A. Surplus production model using biomass, catch, and natural mortality estimates.
B. Use of other data sources (e.g. commercial receipt book, BioSampling).
C. Discussions.

April 18, 2012—8:30 a.m.–5 p.m.

10. Essential Fish Habitat/Habitat Area of Particular Concern (EFH/HAPC).
A. Territory bottomfish, pelagic, and precious corals.
B. Coral reef ecosystem management unit species.
C. Coral reef EFH Project.
11. Status of the territorial bottomfish assessment.
12. The Council Five-Year Research Priorities.
13. Development and Review of Cooperative Research Priorities and Projects.
14. Other Business.
15. Public Comments.
16. Rapporteur reports.
17. General discussions and Plan Team recommendations.

Schedule and Agenda for the Hawaii and Pacific Remote Island Area Plan Team meeting

April 19, 2012—8:30 a.m.–5 p.m.

1. Welcome and Introductions.
2. Approval of the Agenda.
3. Assignment of Rapporteurs.
4. Guiding Principles for Development of Effective Fishery Monitoring Programs.
5. Status of Fishery Monitoring Programs and Research Projects.
A. Coral reef fisheries.
B. Crustacean fisheries.
C. Precious coral fisheries and gold coral moratorium.
i. Status of the black coral surveys.
D. Bottomfish fisheries.
i. Main Hawaiian Island Annual Catch Target Monitoring.
ii. Performance of trip level reporting.
iii. Status of Cooperative Research Projects.
iv. Evaluation of effectiveness of Bottomfish Restricted Areas.
E. Hawaii non-commercial landing estimation.
F. Administrative and regulatory updates.
G. Report on reef fish tagging in Palmyra Atoll.

H. Discussions.

6. Improving ACL specifications and stock assessments.

A. Overview of the ACL process and FY2012 specification.

B. Report on the Council—NMFS ACL Revisited Workshop.

C. Surplus production model using biomass, catch, and natural mortality estimates.

D. Length-based estimation of fishing and natural mortality in Hawaii coral reef fishes.

E. Kona crab stock assessment.

F. Update on the kumu stock assessment.

G. Use of fish trap CPUE as proxy for estimating stock abundance.

H. Discussions.

April 20, 2012—8:30 a.m.–5 p.m.

7. Data collection and reporting issues.

A. Report on the Non-Commercial Data Workshop.

B. Report on the Pacific Island Regional Office data contracts.

C. Report on the Division of Boating and Ocean Recreation boat registry survey.

D. Discussion on potential improvements in the Hawaii data collection.

E. Annual Archipelagic Fishery Ecosystem Reports.

F. Discussions.

8. Essential Fish Habitat/Habitat Area of Particular Concern.

A. Hawaii coral reef EFH project.

B. Hawaii EFH and HAPC for coral reef, pelagic and precious corals.

C. Discussions.

9. Protected species issues.

A. List of fisheries 2012: Marine Mammal Protection Act issues.

10. Developing Cooperative Research priorities.

11. Discussions.

12. Other Business.

13. Public Comment.

14. HI–PRIA PT recommendations.

Special Accommodations

These meetings are physically accessible to people with disabilities. Requests for sign language interpretation or other auxiliary aids should be directed to Kitty M. Simonds, (808) 522–8220 (voice) or (808) 522–8226 (fax), at least 5 days prior to the meeting date.

Authority: 16 U.S.C. 1801 *et seq.*

Dated: March 27, 2012.

Tracey L. Thompson,

Acting Director, Office of Sustainable Fisheries, National Marine Fisheries Service.

[FR Doc. 2012–7660 Filed 3–29–12; 8:45 am]

BILLING CODE 3510–22–P

DEPARTMENT OF COMMERCE

National Oceanic and Atmospheric Administration

RIN 0648–XB129

New England Fishery Management Council; Public Meeting

AGENCY: National Marine Fisheries Service (NMFS), National Oceanic and Atmospheric Administration (NOAA), Commerce.

ACTION: Notice; public meeting.

SUMMARY: The New England Fishery Management Council (Council) is scheduling a public meeting of its Scientific and Statistical Committee (SSC) to consider actions affecting New England fisheries in the exclusive economic zone (EEZ). Recommendations from this group will be brought to the full Council for formal consideration and action, if appropriate.

DATES: This meeting will be held on Monday, April 16, 2012 at 8 a.m.

ADDRESSES: The meeting will be held at the Hotel Providence, 137 Mathewson Street, Providence, RI 02903; telephone: (401) 861–8000; fax: (401) 861–8002.

Council address: New England Fishery Management Council, 50 Water Street, Mill 2, Newburyport, MA 01950.

FOR FURTHER INFORMATION CONTACT: Paul J. Howard, Executive Director, New England Fishery Management Council; telephone: (978) 465–0492.

SUPPLEMENTARY INFORMATION: The NEFMC's Scientific and Statistical Committee will:

a. Complete development of fishing year 2013 and 2014 ABC recommendations for redfish, Georges Bank haddock, Gulf of Maine/Georges Bank windowpane flounder, Southern New England/Mid-Atlantic windowpane flounder, ocean pout, wolffish and halibut, for recommendations not completed from the March 28, 2012 SSC meeting.

b. Review assessments and develop fishing year 2013 and 2014 ABC recommendations for Georges Bank cod, Gulf of Maine haddock, Cape Cod/Gulf of Maine yellowtail flounder, American plaice, witch flounder and Georges Bank/Gulf of Maine white hake.

c. Other business may be discussed.

The public is invited to participate in the SSC meeting via webinar. For online access to the meeting, please reserve your webinar seat now at *https://www3.gotomeeting.com/register/309803270.*

Although non-emergency issues not contained in this agenda may come before this group for discussion, th ose issues may not be the subject of formal action during this meeting. Action will be restricted to those issues specifically listed in this notice and any issues arising after publication of this notice that require emergency action under section 305(c) of the Magnuson-Stevens Act, provided the public has been notified of the Council's intent to take final action to address the emergency.

Special Accommodations

This meeting is physically accessible to people with disabilities. Requests for sign language interpretation or other auxiliary aids should be directed to Paul J. Howard, Executive Director, at (978) 465–0492, at least 5 days prior to the meeting date.

Authority: 16 U.S.C. 1801 *et seq.*

Dated: March 27, 2012.

Tracey L. Thompson,

Acting Director, Office of Sustainable Fisheries, National Marine Fisheries Service.

[FR Doc. 2012–7658 Filed 3–29–12; 8:45 am]

BILLING CODE 3510–22–P

DEPARTMENT OF COMMERCE

National Oceanic and Atmospheric Administration

RIN 0648–XZ14

Takes of Marine Mammals Incidental to Specified Activities; Navy Training Conducted at the Silver Strand Training Complex, San Diego Bay

AGENCY: National Marine Fisheries Service (NMFS), National Oceanic and Atmospheric Administration (NOAA), Commerce.

ACTION: Notice; additional information for the proposed incidental harassment authorization; request for comments.

SUMMARY: NMFS has received an application from the U.S. Navy (Navy) for an Incidental Harassment Authorization (IHA) to take marine mammals, by harassment, incidental to conducting training exercises at the Silver Strand Training Complex (SSTC) in the vicinity of San Diego Bay, California. Subsequently, additional information on marine mammals and proposed improvement on marine mammal monitoring and mitigation measures was received from the Navy. Pursuant to the Marine Mammal Protection Act (MMPA), NMFS is requesting comments on its proposal to issue an IHA to the Navy to incidentally harass, by Level B Harassment only, eight species of marine mammals during the specified activity.

DATES: Comments and information must be received no later than April 30, 2012.

ADDRESSES: Comments on the application should be addressed to Tammy C. Adams, Acting Chief, Permits and Conservation Division, Office of Protected Resources, National Marine Fisheries Service, 1315 East-West Highway, Silver Spring, MD 20910–3225. The mailbox address for providing email comments is *itp.guan@noaa.gov.* NMFS is not responsible for email comments sent to addresses other than the one provided here. Comments sent via email, including all attachments, must not exceed a 10-megabyte file size.

Instructions: All comments received are a part of the public record and will generally be posted to *http://www.nmfs.noaa.gov/pr/permits/incidental.htm* without change. All Personal Identifying Information (for example, name, address, etc.) voluntarily submitted by the commenter may be publicly accessible. Do not submit Confidential Business Information or otherwise sensitive or protected information.

A copy of the application containing a list of the references used in this document may be obtained by writing to the address specified above, telephoning the contact listed below (see **FOR FURTHER INFORMATION CONTACT**), or visiting the Internet at: *http://www.nmfs.noaa.gov/pr/permits/incidental.htm.* Documents cited in this notice may also be viewed, by appointment, during regular business hours, at the aforementioned address.

FOR FURTHER INFORMATION CONTACT: Shane Guan, Office of Protected Resources, NMFS, (301) 427–8418.

SUPPLEMENTARY INFORMATION:

Background

Sections 101(a)(5)(A) and (D) of the MMPA (16 U.S.C. 1361 *et seq.*) direct the Secretary of Commerce (Secretary) to allow, upon request, the incidental, but not intentional taking of small numbers of marine mammals by U.S. citizens who engage in a specified activity (other than commercial fishing) if certain findings are made and regulations are issued or, if the taking is limited to harassment, notice of a proposed authorization is provided to the public for review.

Authorization for incidental takings shall be granted if NMFS finds that the taking will have a negligible impact on the species or stock(s), will not have an unmitigable adverse impact on the availability of the species or stock(s) for subsistence uses (where relevant), and if the permissible methods of taking and requirements pertaining to the mitigation, monitoring and reporting of such taking are set forth. NMFS has defined ''negligible impact'' in 50 CFR 216.103 as: ''* * * an impact resulting from the specified activity that cannot be reasonably expected to, and is not reasonably likely to, adversely affect the species or stock through effects on annual rates of recruitment or survival.''

The National Defense Authorization Act of 2004 (NDAA) (Public Law 108–136) removed the ''small numbers'' and ''specified geographical region'' limitations and amended the definition of ''harassment'' as it applies to a ''military readiness activity'' to read as follows (Section 3(18)(B) of the MMPA):

(i) Any act that injures or has the significant potential to injure a marine mammal or marine mammal stock in the wild [Level A Harassment]; or

(ii) Any act that disturbs or is likely to disturb a marine mammal or marine mammal stock in the wild by causing disruption of natural behavioral patterns, including, but not limited to, migration, surfacing, nursing, breeding, feeding, or sheltering, to a point where such behavioral patterns are abandoned or significantly altered [Level B Harassment].

Section 101(a)(5)(D) of the MMPA established an expedited process by which citizens of the United States can apply for an authorization to incidentally take small numbers of marine mammals by harassment. Section 101(a)(5)(D) establishes a 45-day time limit for NMFS review of an application followed by a 30-day public notice and comment period on any proposed authorizations for the incidental harassment of marine mammals. Within 45 days of the close of the comment period, NMFS must either issue or deny the authorization.

Summary of Request

NMFS received an application on March 3, 2010, and subsequently, a revised application on September 13, 2010, from the Navy for the taking, by harassment, of marine mammals incidental to conducting training exercises at the Navy's Silver Strand Training Complex (SSTC) in the vicinity of San Diego Bay, California. On October 19, 2010, NMFS published a **Federal Register** notice (75 FR 64276) requesting comments from the public concerning the Navy's proposed training activities along with NMFS' proposed IHA. However, on March 4, 2011, three long-beaked common dolphins were found dead following the Navy's mine neutralization training exercise involving time-delayed firing devices (TDFDs) at SSTC, and were suspected to be killed by the detonation. In short, a TDFD device begins a countdown to a detonation event that cannot be stopped, for example, with a 10-min TDFD, once the detonation has been initiated, 10 minutes pass before the detonation occurs and the event cannot be cancelled during that 10 minutes. Subsequently, NMFS suspended the IHA process for SSTC and worked with the Navy to come up with more robust monitoring and mitigation measures to prevent such incidents. On July 22, 2011, the Navy submitted an addendum to its IHA application which includes additional information and additional mitigation and monitoring measures for its proposed mine neutralization training exercises using TDFDs at SSTC to ensure that the potential for injury or mortality is minimized.

Description of the Specific Activity

A detailed description of the Navy's proposed training activities at the SSTC is provided in the **Federal Register** notice for the proposed IHA (75 FR 64276; October 19, 2010), Specifically, major training activities at SSTC include underwater detonation and elevated causeway system (ELCAS) training. There are no changes on the description of the ELCAS training from the original proposed IHA (75 FR 64276; October 19, 2010), therefore, it is not repeated here.

However, the **Federal Register** notice for the proposed IHA did not include a description of TDFDs, which are used to detonate the explosives in the majority of the proposed underwater detonation training related to mine neutralization instead of directly detonating the explosives using positive control (which was described)). A TDFD device begins a countdown to a detonation event with a time-delaying device. For example, with a 10-min TDFD, the actual detonation will be started 10 minutes after the device is set. In addition, there is no mechanism to stop (abort) the pre-set explosion once the device has been set. The following is a detailed description regarding the justification and procedures for underwater detonation using TDFDs.

The Need for Underwater Detonation Using TDFDs

The Navy uses both timed-delayed and positive control to initiate a particular underwater detonation depending on the training event in question and in particular, the training objectives applicable to that underwater detonation. TDFDs are the simplest, safest, most operationally sound method of initiating a demolition charge on a floating mine or mine at depth. TDFDs are used because of their light weight ease of employment and low magnetic

signature in cases of mines sensitive to magnetic fields. In addition, TDFD are HERO safe (''hazards of electromagnetic radiation to ordnance'' safe), meaning there is reduced risk of accidental detonations from nearby radios or other electromagnetic radiation producing devices. The use of TDFD eliminates the need to re-deploy swimmers from a helicopter or boat to recover equipment used with positive control firing devices such as the RFD. The TDFD also allows sufficient time for EOD personnel to swim outside of the detonation plume radius and human safety buffer zone after the timer is set.

Although other detonation initiation devices, such as an RFD (a type of positive control device) can be used to initiate an underwater detonation, it is not normally preferred as the primary firing device due to HERO (see above) concerns with electric detonators, Operational Risk Management (*i.e.,* safety) considerations, and established Navy tactical procedures. Current Navy RFD uses a radio signal to remotely detonate a charge. By using electronic positive control devices such as the RFD as the only alternative to a TDFD, additional electronic signals, and metal from the receiver and wiring is unnecessarily introduced into an influence ordnance operating environment. It is not consistent with sound safety principles or good demolition practice to combine different firing circuits to a demolition charge. For instance, in a live mine field, Navy dive platoons expect there to be additional risks, such as unknown mines with different types of influence firing circuits (*i.e.,* detonated by contact, magnetic field, or certain sounds) in close proximity to a mine they are trying to destroy. The use of a TDFD reduces these risks by limiting the possibility of unintentionally triggering detonation from unknown mine types. Underwater demolition needs to be kept as simple and streamlined as possible, especially when divers and influence ordnance are considered. In an open ocean environment, universal use of RFDs would greatly increase the risk of misfire due to component failure, and put unnecessary stress on all needed connections and devices (adding 600–1,000 feet of firing wire; building\deploying an improvised, bulky, floating system for the RFD receiver; adding another 180 feet of detonating cord plus 10 feet of additional material).

While positive control devices do allow for instantaneous detonation of a charge and are used for some SSTC training events, exclusive use of RFD would introduce operationally unsound tactics, thereby increasing future risks to Navy dive teams. Therefore, it is essential that EOD and NSW platoons qualify annually with necessary time-delay certification, maintain proficiency, and train to face real-world scenarios requiring use of TDFDs.

General Underwater Detonation Procedures

Prior to getting underway, all Explosive Ordnance Disposal (EOD) and Naval Special Warfare (NSW) units conduct a detailed safety and procedure briefing to familiarize everyone with the goals, objectives, and safety requirements (including mitigation zones) applicable to the particular training event.

Underwater detonations only occur during daylight.

Underwater detonations are only conducted in sea-states equal to or less than Beaufort 3 (presence of large wavelets, crests beginning to break, presence of glassy foam, and/or perhaps scattered whitecaps).

Applicable mitigation zones are established and visual survey commences for 30 minutes before detonation. Divers enter the water to conduct the training objective which could include searching for a training object such as a simulated mine or mine-like shape.

For the detonation part of the training, the explosive charge and associate charge initiating device are taken to the detonation point. The explosives Navy EOD and NSW use are military forms of C–4 explosives. In order to detonate C–4 explosives, a fusing and initiating device is required. The two main types of Navy charge initiating devices are discussed in a subsequent section.

Following a particular underwater detonation, additional personnel in the support boats (or helicopter) keep watch within the mitigation zone for 30 minutes.

Other changes the Navy proposed since the previous proposed IHA was issued include the addition of a new point sub-area Training Area-Kilo (TA–K), which is designated 500 yards west of the SSTC–SOUTH boat lanes with a 500 m radius (Table 1–1, Figure 1–1, of the Navy's Addendum). The TA–K area would be used to conduct small charge weight (< 20 lbs) underwater detonations.

Additional information concerning underwater detonations is also provided in the Navy's Addendum, and is included below:

Description of Marine Mammals in the Area of the Specified Activity

Common marine mammal species occurring regularly in the vicinity of the SSTC training area include the California sea lion (*Zalophus californianus*), Pacific harbor seal (*Phoca vitulina richardsii*), California coastal stock of bottlenose dolphin (*Tursiops truncatus*), and more infrequently gray whale (*Eschrichtius robustus*). Detailed descriptions of these species are provided in the **Federal Register** notice for the proposed IHA (75 FR 64276; October 19, 2010) and are not repeated here.

In addition to these four common species, the additional four dolphin species listed below have been sighted in the vicinity of the SSTC training area, but much less frequently. None are listed as threatened or endangered under the Endangered Species Act (ESA). Further information on these species can also be found in the NMFS Stock Assessment Reports (SAR). The Pacific 2010 SAR is available at: *http://www.nmfs.noaa.gov/pr/pdfs/sars/po2010.pdf.*

Long-Beaked Common Dolphin (Delphinus capensis), California Stock

Long-beaked common dolphins (*Delphis capensis*) are found year-round in the waters off California (Carretta *et al.* 2000; Bearzi 2005; DoN 2009, 2010). The distribution and abundance of long-beaked common dolphins appears to be variable based on inter-annual and seasonal time scales (Dohl *et al.* 1986; Heyning and Perrin 1994; Barlow 1995; Forney *et al.* 1995; Forney and Barlow 2007). As oceanographic conditions change, long-beaked common dolphins may move between Mexican and U.S. waters, and therefore a multi-year average abundance estimate is the most appropriate for management within the U.S. waters (Carretta *et al.* 2010). California waters represent the northern limit for this stock and animal's likely movement between U.S. and Mexican waters. No information on trends in abundance is available for this stock because of high inter-annual variability in line-transect abundance estimates (Carretta *et al.* 2010). Heyning and Perrin (1994) detected changes in the proportion of short-beaked to long-beaked common dolphins stranding along the California coast, with the short-beaked common dolphin stranding more frequently prior to the 1982–83 El Niño (which increased water temperatures off California), and the long-beaked common dolphin more frequently observed for several years afterwards. Thus, it appears that both

relative and absolute abundance of these species off California may change with varying oceanographic conditions (Carretta *et al.* 2010). Common dolphin distributions may be related to bathymetry (Hui 1979). Long-beaked common dolphins are usually found within 50 nautical miles (nm) (92.5 km) of shore with significantly more occurrence near canyons, escarpments, and slopes (Heyning and Perrin 1994; Barlow *et al.* 1997; Bearzi 2005, 2006). Group size ranges from less than a dozen to several thousand individuals (Barlow and Forney 2007; Barlow *et al.* 2010). Sparse information is available on the life history of long-beaked common dolphins, however, some information is provided for short-beaked common dolphins which may also apply to long-beaked dolphins. North Pacific short-beaked common dolphin females and males reach sexual maturity at roughly 8 and 10 years, respectively (Ferrero and Walker 1995). Peak calving season for common dolphins in the eastern North Pacific may be spring and early summer (Forney 1994). Barlow (2010) reported average group size for long-beaked common dolphins within a Southern California-specific stratum as 195 individuals from a 2008 survey along the U.S. West Coast. The geometric mean abundance estimate in NMFS' annual stock assessment for the entire California stock of long-beaked common dolphins, based on two ship surveys conducted in 2005 and 2008, is 27,046 (CV=0.59) (Forney 2007; Barlow 2010; Carretta *et al.* 2010). Using a more stratified approach, Barlow *et al.* (2010) estimated abundance within a Southern California-specific strata of 16,480 (CV=0.41) long-beaked common dolphins based on analysis of pooled sighting data from 1991–2008.

Pacific White-Sided Dolphin (Lagenorhynchus obliquidens), California/Oregon/Washington Stock

While Pacific white-sided dolphins could potentially occur year-round in Southern California, surveys suggest a seasonal north-south movement in the eastern North Pacific, with animals found primarily off California during the colder water months and shifting northward into Oregon and Washington as water temperatures increase during late spring and summer (Green *et al.* 1992, 1993; Forney 1994; Forney and Barlow 2007; Barlow 2010). Salvadeo *et al.* (2010) propose that increased global warming may increase a northward shift in Pacific white-sided dolphins. The Pacific white-sided dolphin is most common in waters over the continental shelf and slope, however, sighting records and captures in pelagic driftnets indicate that this species also occurs in oceanic waters well beyond the shelf and slope (Leatherwood *et al.* 1984; DoN 2009, 2010). Soldevilla *et al.* (2010a) reported the possibility of two distinct eco-types of Pacific white-sided dolphins occurring in Southern California based on passive acoustic detection of two distinct echolocation click patterns. No population trends have been observed in California or adjacent waters. Barlow (2010) reported average group size for Pacific white-sided dolphins within a Southern California-specific stratum as 17 from a 2008 survey along the U.S. West Coast. The size of the entire California/Oregon/Washington Stock is estimated to be 26,930 (CV=0.28) individuals (Forney 2007, Barlow, 2010). Using a more stratified approach, Barlow *et al.* (2010) estimated abundance within a Southern California-specific strata of 1,914 (CV=0.39) Pacific white-sided dolphins based on analysis of pooled sighting data from 1991–2008.

Risso's Dolphin (Grampus griseus), California/Oregon/Washington Stock

Off the U.S. West coast, Risso's dolphins are commonly seen on the shelf off Southern California and in slope and offshore waters of California, Oregon and Washington (Soldevilla *et al.* 2010b; Carretta *et al.* 2010). Animals found off California during the colder water months are thought to shift northward into Oregon and Washington as water temperatures increase in late spring and summer (Green *et al.* 1992). The southern end of this population's range is not well documented, but previous surveys have shown a conspicuous 500 nm distributional gap between these animals and Risso's dolphins sighted south of Baja California and in the Gulf of California (Mangels and Gerrodette 1994). Thus this population appears distinct from animals found in the eastern tropical Pacific and the Gulf of California (Carretta *et al.* 2010). As oceanographic conditions vary, Risso's dolphins may spend time outside the U.S. Exclusive Economic Zone. Barlow (2010) reported average group size for Risso's dolphins within a Southern California-specific stratum as 23 from a 2008 survey along the U.S. West Coast. The size of the California/Oregon/Washington Stock is estimated to be 6,272 (CV=0.30) individuals (Forney 2007; Barlow 2010; Carretta *et al.* 2010). Using a more stratified approach, Barlow *et al.* (2010) estimated abundance within a Southern California-specific strata of 3,974 (CV=0.39) Risso's dolphins based on analysis of pooled sighting data from 1991–2008.

Short-Beaked Common Dolphin (Delphinus delphis), California/Oregon/Washington Stock

Short-beaked common dolphins are the most abundant cetacean off California, and are widely distributed between the coast and at least 300 nm distance from shore (Dohl *et al.* 1981; Forney *et al.* 1995; Barlow 2010; Carretta *et al.* 2010). Along the U.S. West Coast, portions of the short-beaked common dolphins' distribution overlap with that of the long-beaked common dolphin. The northward extent of short-beaked common dolphin distribution appears to vary inter-annually and with changing oceanographic conditions (Forney and Barlow 1998). Barlow (2010) reported average group size for short-beaked common dolphins within a Southern California-specific stratum as 122 from a 2008 survey along the U.S. West Coast. The size of the California/Oregon/Washington Stock is estimated to be 411,211 (CV=0.21) individuals (Carretta *et al.* 2010). Using a more stratified approach, Barlow *et al.* (2010) estimated abundance within a Southern California-specific strata of 152,000 (CV=0.17) Risso's dolphins based on analysis of pooled sighting data from 1991–2008.

Potential Effects on Marine Mammals

Anticipated impacts resulting from the Navy's proposed SSTC training activities include disturbance from underwater detonation events and pile driving from the Elevated Causeway System (ELCAS) training events, if marine mammals are in the vicinity of these action areas. Detailed description and comprehensive analysis of the overall potential effects on marine mammals that could result from the Navy's proposed exercises involving ELCAS training events at the SSTC action area are provided in the **Federal Register** notice for the original proposed IHA (75 FR 64276; October 19, 2010). The anticipated impacts from marine mammal exposure to explosive detonations and pile-driving remain unchanged, however, the nature of potential exposure has changed due to the inclusion of TDFDs and is described and analyzed below.

As noted earlier, the use of TDFDs was not addressed in the original **FEDERAL REGISTER** notice regarding the proposed IHA (75 FR 64276; October 19, 2010).

As mentioned earlier, a TDFD begins a countdown to a detonation event with a time-delaying device, and there is no mechanism to stop (abort) the pre-set explosion once the device has been set. Therefore, in the absence of any

additional mitigation, the potential danger exists in the scenario that during the brief period after the exclusion zone is cleared and before the charges are detonated, marine mammals could enter the exclusion zone and approach close enough to the explosive to be injured or killed upon detonation. Nevertheless, the anticipated level of impacts to marine mammals without any mitigation and monitoring measures, which is assessed solely based on the density and distribution of the animals within the vicinity of the action, remains the same as analyzed in the proposed IHA.

To address, and ultimately reduce and minimize the risks from underwater detonations that involve TDFDs, the Navy and NMFS developed a set of robust monitoring and mitigation measures (such as increasing the size of exclusion zones to account for the distance that a marine mammal might travel during the TDFD delay and increased pre-exercise monitoring). With the implementation of these monitoring and mitigation measures, NMFS believes that the potential effects to marine mammals that would result from the proposed SSTC training activities will remain the same as analyzed in the **Federal Register** notice for the proposed IHA (75 FR 64276; October 19, 2010). These monitoring and mitigation measures are further discussed in detail below, as well as the estimated number of takes.

Specific analysis on additional species with infrequent occurrence that could be affected is provided below, since they were not included in the initial proposed IHA (75 FR 64276; October 19, 2010).

Long-Beaked Common Dolphins

With the implementation of enhanced monitoring and mitigation measures (see below), there is no predicted mortality or Level A injury for long-beaked common dolphins. Modeling predicted there would potentially be 52 Level B exposures from underwater explosions and 54 Level B exposures from ELCAS pile driving and removal. Of all the relatively rare species within SSTC, the long-beaked common dolphin is the most possible given its more near-shore coastal distribution (Bearzi 2005; Carretta *et al.* 2010). Given low site fidelity to areas without significant bathymetric relief such as the low slope sandy bottom under the SSTC boat lanes (Hui 1979; Heyning and Perrin 1994; Bearzi 2005; 2006), NMFS believes that pre-detonation mitigation would detect long-beaked common dolphins and avoid exposure to pressure or energy levels associated with injury or mortality.

Pacific White-Side Dolphins

With the implementation of enhanced monitoring and mitigation measures (see below), there is no predicted mortality or Level A injury for Pacific white-sided dolphins. Modeling predicted there would potentially be 13 Level B exposures from underwater explosions and 12 Level B exposures from ELCAS pile driving and removal. There is limited empirical data available to confirm Pacific white-sided dolphin species occurrence in the near shore water adjacent to the SSTC boat lanes. Movement of Pacific white-side dolphins into the SSTC boat lanes would likely be rare to very infrequent and limited in duration. NMFS believes that pre-detonation mitigation would detect Pacific white-sided dolphins, if present at all, and avoid exposure to energy or pressure levels associated with injury or mortality.

Risso's Dolphins

With the implementation of enhanced monitoring and mitigation measures (see below), there is no predicted mortality or Level A injury for Risso's dolphins. Modeling predicted there would potentially be 32 Level B exposures from underwater explosions and 30 Level B exposures from ELCAS pile driving and removal. There is limited empirical data available to confirm Risso's dolphin species occurrence in the near shore water adjacent to the SSTC boat lanes. More Risso's dolphin sightings occur further offshore (DoN 2009; Barlow 2010; Carretta *et al.* 2010; DoN 2010a). Movement of Risso's dolphins into the SSTC boat lanes would likely be rare to very infrequent and limited in duration. NMFS believes that pre-detonation mitigation would detect Risso's dolphins, if present at all, and avoid exposure to energy or pressure levels associated with injury or mortality.

Short-Beaked Common Dolphins

With the implementation of enhanced monitoring and mitigation measures (see below), there is no predicted mortality or Level A injury for short-beaked common dolphins. Modeling predicted there would potentially be 448 Level B exposures from underwater explosions and 542 Level B exposures from ELCAS pile driving and removal. There is limited empirical data available to confirm short-beaked common dolphin species occurrence in the near shore water adjacent to the SSTC boat lanes. More short-beaked common dolphin sightings occur further offshore (Bearzi 2005; DoN 2009; Barlow 2010; Carretta *et al.* 2010; DoN 2010a). Movement of short-beaked common dolphins into the SSTC boat lanes would likely be rare to very infrequent and limited in duration. NMFS believes that pre-detonation mitigation would detect short-beaked common dolphins, if present at all, and avoid exposure to energy or pressure levels associated with injury or mortality.

Anticipated Effects on Habitat

Detailed description and comprehensive analysis of the overall potential effects on marine mammal habitat that could result from the Navy's proposed training exercises at the SSTC action area are provided in the **Federal Register** notice for the proposed IHA (75 FR 64276; October 19, 2010). There is no change to the original assessment of the overall potential environmental effects, therefore, they are not repeated here.

Proposed Additional Mitigation Measures

In order to issue an incidental take authorization under Section 101(a)(5)(D) of the MMPA, NMFS must set forth the permissible methods of taking pursuant to such activity, and other means of effecting the least practicable adverse impact on such species or stock and its habitat, paying particular attention to rookeries, mating grounds, and areas of similar significance, and on the availability of such species or stock for taking for certain subsistence uses.

For the Navy's proposed SSTC training activities, the Navy worked with NMFS and proposed a set of monitoring and mitigation measures to reduce potential impacts to marine mammals. These initial monitoring and mitigation measures were published in the **Federal Register** notice for the proposed IHA published on October 19, 2010 (75 FR 64276). Those monitoring and mitigation measures were based on the Navy's training protocols for mine detonation that had been used over decades. As a consequence of the March 4, 2011, incident, in which long-beaked common dolphins were killed during these exercises, NMFS suspended the processing of the proposed IHA and began to re-evaluate its marine mammal effects analysis and the monitoring and mitigation measures. NMFS worked with the Navy to develop monitoring and mitigation measures to address the use of TDFDs by accounting for dolphin swim speed with an enlarged safety zone and by increasing monitoring efforts. These revised monitoring and mitigation measures are proposed specifically for underwater mine

neutralization using TDFDs, in addition to overarching general monitoring and mitigation measures developed for the Navy's general training activities at the SSTC study area, which were described in detail in the **Federal Register** notice for the proposed IHA (75 FR 64276; October 19, 2010). The derivation and description of the revised monitoring and mitigation measures are set forth below.

Derivation of Timed Delayed Mitigation Zones

To increase the effectiveness of the shallow water mitigation zone when using time-delayed detonations (*i.e.,* TDFD), the existing Navy modeled zone of influence (ZOI) for a particular charge weight is enlarged to account for the distance an animal could swim during the time delay given known dolphin speed.

In essence, this should allow sighting of marine mammals outside of a final mitigation zone swimming into the zone prior to starting a timed-delay detonation.

Final TDFD mitigation zones are determined in a three step process:

First, the distance that a dolphin could swim during the length of an individual time-delay is calculated based on swim speed. Onto this distance, another 200 yds is added as an additional buffer to account for varying individual swim speed.

Second, the potential distance traveled during a time-delay is added to SSTC specific model results showing range distances to the applicable NMFS injury criteria for underwater detonations.

Third, the Navy rounds the range distances calculated in Step 2 to appropriate mitigation ranges more likely to be practical in the field.

A detailed discussion on each of these steps is provided below.

(1) Swim Speed Estimation

Using an average swim speed of 3 knots (102 yd/min) for a delphinid, the Navy provided the approximate distance that an animal would typically travel within a given time-delay period (Table 1).

To account for differences between species or faster swimming by individuals within a species, the Navy and NMFS also agreed to add still another 200 yds to the original 3 knot derived ranges to account for variation in individual swim speeds. Table 1 shows both the initial 3 knot range plus the additional 200 yard buffer.

TABLE 1—POTENTIAL DISTANCE TRAVELED BASED ON SWIM SPEED AND LENGTH OF TIME-DELAY AND ADDITIONAL 200 YARDS BUFFER

Species group	Swim speed	Time-delay (min)	Potential distance traveled (yd)	Potential distance traveled with additional 200 (yds) buffer (yd)
Delphinid	102 yd/min	5	510	710
		6	612	812
		7	714	914
		8	816	1,016
		9	918	1,118
		10	1,020	1,220

(2) ZOI and Swim Speed-Time-Buffer Addition

Based on acoustic propagation modeling and anticipated zones of influences (ZOI) to NMFS injury criteria (13 psi-msec) by training event type and charge weight, potential dolphin travel distances by time at 3 knots plus buffer can be added to event specific ZOI to produce a matrix of charge weight, selected delay time, and applicable buffer zone (Table 2).

As long as animals are not observed within a given time-delayed mitigation zone before the time-delay detonation is set, then the animals would be unlikely to swim into the injury zone from outside the zone within the time-delay window.

TABLE 2—REVISED RADIUS FOR TIMED-DELAY FIRING DEVICES BASED ON CHARGE SIZE, LENGTH OF TIME DELAY, AND ADDITIONAL BUFFER FROM TABLE 1

Charge weight (NEW)	Navy modeled ZOI to injury (13 psi-msec)	Time-delay					
		5 min (yd)	6 min (yd)	7 min (yd)	8 min (yd)	9 min (yd)	10 min (yd)
5 lb	80	790	892	994	1,006	1,198	1,300
10 lb	160	870	972	1,074	1,176	1,278	1,380
15–29 lb	360	1,070	1,172	1,274	1,376	1,478	1,580

(3) Final TDFD Detonation Mitigation Zones

Table 3 shows the final mitigation zones and application for SSTC TDFD underwater detonations. This required in most cases rounding (mostly upward) the calculated ranges from Table 2 to the appropriate range category (1,000, 1,400, and 1,500 yds). As long as animals are not observed within the buffer zones before the time-delay detonation is set, then the animals would be unlikely to swim into the injury zone from outside the area within the time-delay window.

TABLE 3—UPDATED BUFFER ZONE RADIUS (YD) FOR TDFDS BASED ON SIZE OF CHARGE AND LENGTH OF TIME-DELAY, WITH ADDITIONAL BUFFER ADDED TO ACCOUNT FOR FASTER SWIM SPEEDS

Charge Size (lb NEW)	Time-delay					
	5 min (yd)	6 min (yd)	7 min (yd)	8 min (yd)	9 min (yd)	10 min (yd)
5 lb	1,000	1,000	1,000	1,000	1,400	1,400
10 lb	1,000	1,000	1,000	1,400	1,400	1,400
15–29 lb	1,000	1,400	1,400	1,400	1,500	1,500

1,000 yds: minimum of 2 observation boats.
1,400/1,500 yds: minimum of 3 observation boats or 2 boats and 1 helicopter.

Finally, to create a marine mammal mitigation regime that is more likely to achieve success in practical execution, Navy worked with NMFS and divided the span of training events associated with different charge weights (as derived in Table 2) into those requiring a 1,000 yard buffer zone (with 2 boats monitoring), and those requiring greater than a 1,400 yard buffer zone (3 boats monitoring, or 2 boats and 1 helicopter). Proposed monitoring measures that support these mitigation zones and monitoring protocols are described in detail in the following sections for different types of charges in different environments.

While the buffer zones vary between the different types of underwater detonation, the Navy proposes three broad types of monitoring and mitigation protocols based on different types of training events and environments, and the practicability and effectiveness of monitoring and mitigation measures in different environmental settings. These monitoring and mitigation protocols are:

- Very shallow water (VSW, <24 feet) underwater detonation monitoring and mitigation:
- Shallow water (>24 feet) underwater detonation monitoring and mitigation; and
- ELCAS pile driving and removal monitoring and mitigation.

Although these mitigation protocols were discussed extensively in the **Federal Register** notice for the proposed IHA (75 FR 64276; October 19, 2010), except for the ELCAS pile driving and removal mitigation, there are significant revisions to the other two mitigation measure protocols to reduce and minimize the risks from underwater detonation events involving TDFDs, as discussed above. Therefore, the proposed revised monitoring and mitigation measures for VSW underwater detonation and shallow water underwater events are listed below in their entireties.

Proposed Mitigation and Monitoring Measures for Underwater Detonations in Very Shallow Water (VSW, Water Depth <24 ft)

(1) Mitigation and Monitoring Measures for VSW Underwater Detonations Using Positive Control

1. Underwater detonations using positive control (remote firing devices) will only be conducted during daylight.
2. Easily visible anchored floats will be positioned on 700 yard radius of a roughly semi-circular zone (the shoreward half being bounded by shoreline and immediate off-shore water) around the detonation location for small explosive exercises at the SSTC. These mark the outer limits of the mitigation zone.
3. For each VSW underwater detonation event, a safety-boat with a minimum of one observer is launched 30 or more minutes prior to detonation and moves through the area around the detonation site. The task of the safety observer is to exclude humans from coming into the area and to augment a shore observer's visual search of the mitigation zone for marine mammals. The safety-boat observer is in constant radio communication with the exercise coordinator and shore observer discussed below.
4. A shore-based observer will also be deployed for VSW detonations in addition to boat based observers. The shore observer will indicate that the area is clear of marine mammals after 10 or more minutes of continuous observation with no marine mammals having been seen in the mitigation zone or moving toward it.
5. At least 10 minutes prior to the planned initiation of the detonation event-sequence, the shore observer, on an elevated on-shore position, begins a continuous visual search with binoculars of the mitigation zone. At this time, the safety-boat observer informs the shore observer if any marine mammal has been seen in the zone and, together, both search the surface within and beyond the mitigation zone for marine mammals.
6. The observers (boat and shore based) will indicate that the area is not clear any time a marine mammal is sighted in the mitigation zone or moving toward it and, subsequently, indicate that the area is clear of marine mammals when the animal is out and moving away and no other marine mammals have been sited.
7. Initiation of the detonation sequence will only begin on final receipt of an indication from the shore observer that the area is clear of marine mammals and will be postponed on receipt of an indication from any observer that the area is not clear of marine mammals.
8. Following the detonation, visual monitoring of the mitigation zone continues for 30 minutes for the appearance of any marine mammal in the zone. Any marine mammal appearing in the area will be observed for signs of possible injury.
9. Any marine mammal observed after a VSW underwater detonation either injured or exhibiting signs of distress will be reported via operational chain of command to Navy environmental representatives from U.S. Pacific Fleet, Environmental Office, San Diego Detachment. Using Marine Mammal Stranding communication trees and contact procedures established for the Southern California Range Complex, the Navy will report these events to the Stranding Coordinator of NMFS' Southwest Regional Office. These voice or email reports will contain the date and time of the sighting, location (or if precise latitude and longitude is not currently available, then the approximate location in reference to an established SSTC beach feature), species description (if known), and indication of the animal's status.

(2) Mitigation and Monitoring Measures for VSW Underwater Detonations Using Time-Delay (TDFD Only)

1. Underwater detonations using timed delay devices will only be conducted during daylight.
2. Time-delays longer than 10 minutes will not be used. The initiation of the

device will not start until the mitigation area below is clear for a full 30 minutes prior to initiation of the timer.

3. A mitigation zone will be established around each underwater detonation location as indicated in Table 3 (1,000 or 1,400 yards) based on charge weight and length of time delay used.

4. VSW ranges 1,000 yds:

• For each VSW underwater detonation event with a mitigation zone of 1,000 yds, a safety boat with a minimum of one observer is launched 30 or more minutes prior to detonation and moves through the area around the detonation site at the seaward edge of the mitigation zone. The task of the boat is to exclude humans from coming into the area and to augment a shore observer's visual search of the mitigation zone for marine mammals. The safety-boat observer is in constant radio communication with the exercise coordinator and shore observer discussed below. To the best extent practical, boats will try to maintain a 10 knot search speed.

• A shore-based observer will also be deployed for VSW detonations in addition to boat based observers. At least 10 minutes prior to the planned initiation of the detonation event-sequence, the shore observer, on an elevated on-shore position, begins a continuous visual search with binoculars of the mitigation zone. At this time, the safety-boat observer informs the shore observer if any marine mammal has been seen in the zone and, together, both search the surface within and beyond the mitigation zone for marine mammals. The shore observer will indicate that the area is clear of marine mammals after 10 or more minutes of continuous observation with no marine mammals having been seen in the mitigation zone or moving toward it.

5. VSW ranges larger than 1,400 yards:

• A minimum of 2 boats will be used to survey for marine mammals at mitigation ranges larger than 1,400 yards.

• When conducting the surveys within a mitigation zone >1,400 yds, boats will position themselves near the mid-point of the mitigation zone radius (but always outside the detonation plume radius/human safety zone) and travel in a semi-circular pattern around the detonation location surveying both the inner (toward detonation site) and outer (away from detonation site) areas. When using 2 boats, each boat will be positioned on opposite sides of the detonation location, separated by 180 degrees. If using more than 2 boats, each boat will be positioned equidistant from one another (120 degrees separation for 3 boats, 90 degrees separation for 4 boats, etc.). If available, aerial visual survey support from Navy helicopters can be utilized, so long as it will not jeopardize safety of flight. Helicopters will travel in a circular pattern around the detonation location.

6. A mitigation zone will be surveyed from 30 minutes prior to the detonation and for 30 minutes after the detonation.

7. Other personnel besides boat observers can also maintain situational awareness on the presence of marine mammals within the mitigation zone to the best extent practical given dive safety considerations.

Divers placing the charges on mines will observe the immediate underwater area around a detonation site for marine mammals and report sightings to surface observers.

8. If a marine mammal is sighted within an established mitigation zone or moving towards it, underwater detonation events will be suspended until the marine mammal has voluntarily left the area and the area is clear of marine mammals for at least 30 minutes.

9. Immediately following the detonation, visual monitoring for affected marine mammals within the mitigation zone will continue for 30 minutes.

10. Any marine mammal observed after an underwater detonation either injured or exhibiting signs of distress will be reported via Navy operational chain of command to Navy environmental representatives from U.S. Pacific Fleet, Environmental Office, San Diego Detachment. Using Marine Mammal Stranding communication trees and contact procedures established for the Southern California Range Complex, the Navy will report these events to the Stranding Coordinator of NMFS' Southwest Regional Office. These voice or email reports will contain the date and time of the sighting, location (or if precise latitude and longitude is not currently available, then the approximate location in reference to an established SSTC beach feature), species description (if known), and indication of the animal's status.

Proposed Mitigation and Monitoring Measures for Underwater Detonations in Shallow Water (>24 Feet)

(1) Mitigation and Monitoring Measures for Underwater Detonations Using Positive Control (Except SWAG and Timed Detonations)

1. Underwater detonations using positive control devices will only be conducted during daylight.

2. A mitigation zone of 700 yards will be established around each underwater detonation point.

3. A minimum of two boats, including but not limited to small zodiacs and 7-m Rigid Hulled Inflatable Boats (RHIB) will be deployed. One boat will act as an observer platform, while the other boat is typically the diver support boat.

4. Two observers with binoculars on one small craft/boat will survey the detonation area and the mitigation zone for marine mammals from at least 30 minutes prior to commencement of the scheduled explosive event and until at least 30 minutes after detonation.

5. In addition to the dedicated observers, all divers and boat operators engaged in detonation events can potentially monitor the area immediately surrounding the point of detonation for marine mammals.

6. If a marine mammal is sighted within the 700 yard mitigation zone or moving towards it, underwater detonation events will be suspended until the marine mammal has voluntarily left the area and the area is clear of marine mammals for at least 30 minutes.

7. Immediately following the detonation, visual monitoring for marine mammals within the mitigation zone will continue for 30 minutes. Any marine mammal observed after an underwater detonation either injured or exhibiting signs of distress will be reported via Navy operational chain of command to Navy environmental representatives from U.S. Pacific Fleet, Environmental Office, San Diego Detachment. Using Marine Mammal Stranding communication trees and contact procedures established for the Southern California Range Complex, the Navy will report these events to the Stranding Coordinator of NMFS' Southwest Regional Office. These voice or email reports will contain the date and time of the sighting, location (or if precise latitude and longitude is not currently available, then the approximate location in reference to an established SSTC beach feature), species description (if known), and indication of the animals status.

(2) Mitigation and Monitoring Measures for Underwater Detonations Using Time-Delay (TDFD Detonations Only)

1. Underwater detonations using timed delay devices will only be conducted during daylight.

2. Time-delays longer than 10 minutes will not be used. The initiation of the device will not start until the mitigation area below is clear for a full 30 minutes prior to initiation of the timer.

3. A mitigation zone will be established around each underwater detonation location as indicated in Table 3 based on charge weight and length of time-delay used. When conducting the surveys within a mitigation zone (either 1,000 or 1,400 yds), boats will position themselves near the mid-point of the mitigation zone radius (but always outside the detonation plume radius/human safety zone) and travel in a circular pattern around the detonation location surveying both the inner (toward detonation site) and outer (away from detonation site) areas.

4. Shallow water TDFD detonations range 1,000 yds:

- A minimum of 2 boats will be used to survey for marine mammals at mitigation ranges of 1,000 yds.
- When using 2 boats, each boat will be positioned on opposite sides of the detonation location, separated by 180 degrees.
- Two observers in each of the boats will conduct continuous visual survey of the mitigation zone for the entire duration of a training event.
- To the best extent practical, boats will try to maintain a 10 knot search speed. This search speed was added to ensure adequate coverage of the buffer zone during observation periods. While weather conditions and sea states may require slower speeds in some instances, 10 knots is a prudent, safe, and executable speed that will allow for adequate surveillance. For a 1,000 yd radius buffer zone a boat travelling at 10 knots and 500 yds away from the detonation point would circle the detonation point 3.22 times during a 30 minute survey period. By using 2 boats, 6.44 circles around the detonation point would be completed in a 30 minute span.

5. Shallow water TDFD detonations greater than 1,400 yds:

- A minimum of 3 boats or 2 boats and 1 helicopter will be used to survey for marine mammals at mitigation ranges of 1,400 yds.
- When using 3 (or more) boats, each boat will be positioned equidistant from one another (120 degrees separation for 3 boats, 90 degrees separation for 4 boats, etc.).
- For a 1,400 yd radius mitigation zone, a 10 knot speed results in 2.3 circles for each of the three boats, or nearly 7 circles around the detonation point over a 30 minute span.
- If available, aerial visual survey support from Navy helicopters can be utilized, so long as it will not jeopardize safety of flight.
- Helicopters, if available, can be used in lieu of one of the boat requirements. Navy helicopter pilots are trained to conduct searches for relatively small objects in the water, such as a missing person. A helicopter search pattern is dictated by standard Navy protocols and accounts for multiple variables, such as the size and shape of the search area, size of the object being searched for, and local environmental conditions, among others.

6. A mitigation zone will be surveyed from 30 minutes prior to the detonation and for 30 minutes after the detonation.

7. Other personnel besides boat observers can also maintain situational awareness on the presence of marine mammals within the mitigation zone to the best extent practical given dive safety considerations.

Divers placing the charges on mines will observe the immediate underwater area around a detonation site for marine mammals and report sightings to surface observers.

8. If a marine mammal is sighted within an established mitigation zone or moving towards it, underwater detonation events will be suspended until the marine mammal has voluntarily left the area and the area is clear of marine mammals for at least 30 minutes.

9. Immediately following the detonation, visual monitoring for affected marine mammals within the mitigation zone will continue for 30 minutes.

10. Any marine mammal observed after an underwater detonation either injured or exhibiting signs of distress will be reported via Navy operational chain of command to Navy environmental representatives from U.S. Pacific Fleet, Environmental Office, San Diego Detachment or Pearl Harbor. Using Marine Mammal Stranding protocols and communication trees established for the Southern California and Hawaii Range Complexes, the Navy will report these events to the Stranding Coordinator of NMFS' Southwest or Pacific Islands Regional Office. These voice or email reports will contain the date and time of the sighting, location (or if precise latitude and longitude is not currently available, then the approximate location in reference to an established SSTC beach feature), species description (if known), and indication of the animal's status.

(3) Proposed Mitigation and Monitoring Measures for Underwater SWAG Detonations (SWAG Only)

A modified set of mitigation measures would be implemented for SWAG detonations, which involve much smaller charges of 0.03 lbs NEW.

1. Underwater detonations using SWAG will only be conducted during daylight.

2. A mitigation zone of 60 yards will be established around each SWAG detonation site.

3. A minimum of two boats, including but not limited to small zodiacs and 7-m Rigid Hulled Inflatable Boats (RHIB) will be deployed. One boat will act as an observer platform, while the other boat is typically the diver support boat.

4. Two observers with binoculars on one small craft\boat will survey the detonation area and the mitigation zone for marine mammals for at least 10 minutes prior to commencement of the scheduled explosive event and until at least 10 minutes after detonation.

5. In addition to the dedicated observers, all divers and boat operators engaged in detonation events can potentially monitor the area immediately surrounding the point of detonation for marine mammals.

6. Divers and personnel in support boats would monitor for marine mammals out to the 60 yard mitigation zone for 10 minutes prior to any detonation.

7. After the detonation, visual monitoring for marine mammals would continue for 10 minutes. Any marine mammal observed after an underwater detonation either injured or exhibiting signs of distress will be reported via Navy operational chain of command to Navy environmental representatives from U.S. Pacific Fleet, Environmental Office, San Diego Detachment. Using Marine Mammal Stranding communication trees and contact procedures established for the Southern California Range Complex, the Navy will report these events to the Stranding Coordinator of NMFS' Southwest Regional Office. These voice or email reports will contain the date and time of the sighting, location (or if precise latitude and longitude is not currently available, then the approximate location in reference to an established SSTC beach feature), species description (if known), and indication of the animal's status.

Estimated Take by Incidental Harassment

There is no change for marine mammal take estimates for the four marine mammal species analyzed in the **Federal Register** for the proposed IHA (75 FR 64276; October 19, 2010) for underwater detonations and from ELCAS trainings at the SSTC Study Area. Take estimates were based on marine mammal densities and distribution data in the action areas, computed with modeled explosive sources and the sizes of the buffer zones. Without the inclusion of additional mitigation measures, the use of TDFDs could increase the likelihood that marine mammals are exposed to explosive detonations at injurious levels—however, with the enlarged exclusion zone to account for the distance that an animal might swim during the timed delay, this likelihood is minimized.

The same methodology was used for calculating take estimates for the additional four dolphin species. The estimated takes are presented in Tables 4 and 5 below.

TABLE 4—SSTC MODELED ESTIMATES OF SPECIES EXPOSED TO UNDERWATER DETONATIONS WITHOUT IMPLEMENTATION OF MITIGATION MEASURES

Species	Annual marine mammal exposure (all sources)			
	Level B behavior (multiple successive explosive events only)	Level B TTS	Level A	Mortality
	177 dB re 1 μPa	182 dB re 1 μPa²-s/23 psi	205 dB re 1 μPa²-s/13.0 psi-ms	30.5 psi-ms
Gray Whale:				
Warm	.....	.....	.....	.....
Cold	0	0	0	0
Bottlenose Dolphin:				
Warm	30	43	0	0
Cold	40	55	0	0
California Sea Lion:				
Warm	4	4	0	0
Cold	40	51	0	0
Harbor Seal:				
Warm	0	0	0	0
Cold	0	0	0	0
Long-beaked common dolphin:				
Warm	14	21	0	0
Cold	7	10	0	0
Pacific white-sided dolphin:				
Warm	2	3	0	0
Cold	3	4	0	0
Risso's dolphin:				
Warm	3	4	0	0
Cold	11	15	0	0
Short-beaked common dolphin:				
Warm	123	177	0	0
Cold	62	86	0	0
Total Annual Exposures	453	626	0	0

TABLE 5—EXPOSURE ESTIMATES FROM ELCAS PILE DRIVING AND REMOVAL PRIOR TO IMPLEMENTATION OF MITIGATION MEASURES

Species	Annual marine mammal exposure (all sources)			
	Level B behavior (non-impulse)	Level B behavior (impulse)	Level A (cetacean)	Level A (pinniped)
	120 dB_{rms} re 1 μPa	120 dB_{rms} re 1 μPa	120 dB_{rms} re 1 μPa	120 dB_{rms} re 1 μPa
Gray Whale:				
Installation	N/A	0	0	0
Removal	6	N/A	0	0
Bottlenose Dolphin:				
Installation	N/A	40	0	0
Removal	168	N/A	0	0
California Sea Lion:				
Installation	N/A	20	0	0
Removal	102	N/A	0	0
Harbor Seal:				
Installation	N/A	0	0	0
Removal	12	N/A	0	0
Long-beaked common dolphin:				
Installation	N/A	0	0	0
Removal	54	N/A	0	0

TABLE 5—EXPOSURE ESTIMATES FROM ELCAS PILE DRIVING AND REMOVAL PRIOR TO IMPLEMENTATION OF MITIGATION MEASURES—Continued

Species	Annual marine mammal exposure (all sources)			
	Level B behavior (non-impulse)	Level B behavior (impulse)	Level A (cetacean)	Level A (pinniped)
	120 dB_{rms} re 1 μPa	120 dB_{rms} re 1 μPa	120 dB_{rms} re 1 μPa	120 dB_{rms} re 1 μPa
Pacific white-sided dolphin:				
Installation	N/A	0	0	0
Removal	12	N/A	0	0
Risso's dolphin:				
Installation	N/A	0	0	0
Removal	30	N/A	0	0
Short-beaked common dolphin:				
Installation	N/A	80	0	0
Removal	462	N/A	0	0
Total Annual Exposures	846	140	0	0

In summary, for all underwater detonations and ELCAS pile driving activities, the Navy's impact model predicted that no mortality and/or Level A harassment (injury) would occur to marine mammal species and stocks within the proposed action area.

For non-sequential (*i.e.,* single detonation) training events, the Navy's impact model predicted a total of 473 annual exposures that could result in Level B harassment (TTS), which include 98, 55, 31, 7, 19, and 263 annual exposures to bottlenose dolphins, California sea lions, long-beaked common dolphins, Pacific white-sided dolphins, Risso's dolphins, and short-beaked common dolphins, respectively.

For sequential (Multiple Successive Explosive events) training events, the Navy's impact model predicted a total of 339 annual exposures that could result in Level B behavioral harassment, which include 70, 44, 21, 5, 14, and 185 annual exposures to bottlenose dolphins, California sea lions, long-beaked common dolphins, Pacific white-sided dolphins, Risso's dolphins, and short-beaked common dolphins, respectively.

Subsistence Harvest of Marine Mammals

NMFS has preliminarily determined the Navy's proposed training activities at the SSTC would not have an unmitigable adverse impact on the availability of the affected species or stocks for subsistence use since there are no such uses in the specified area.

Negligible Impact and Small Numbers Analysis and Determination

Pursuant to NMFS' regulations implementing the MMPA, an applicant is required to estimate the number of animals that will be ''taken'' by the specified activities (*i.e.,* takes by harassment only, or takes by harassment, injury, and/or death). This estimate informs the analysis that NMFS must perform to determine whether the activity will have a ''negligible impact'' on the species or stock. Level B (behavioral) harassment occurs at the level of the individual(s) and does not assume any resulting population-level consequences, though there are known avenues through which behavioral disturbance of individuals can result in population-level effects. A negligible impact finding is based on the lack of likely adverse effects on annual rates of recruitment or survival (*i.e.,* population-level effects). An estimate of the number of Level B harassment takes, alone, is not enough information on which to base an impact determination. In addition to considering estimates of the number of marine mammals that might be ''taken'' through behavioral harassment, NMFS must consider other factors, such as the likely nature of any responses (their intensity, duration, etc.), the context of any responses (critical reproductive time or location, migration, etc.), or any of the other variables mentioned in the first paragraph (if known), as well as the number and nature of estimated Level A takes, the number of estimated mortalities, and effects on habitat.

A detailed description on the negligible impacts and small number analyses and determination was provided in the **Federal Register** for the proposed IHA (75 FR 64276; October 19, 2010), and is not repeated here. This section provides additional analysis on the use of TDFD during the Navy's underwater detonation training activities.

The aforementioned additional mitigation and monitoring measures will increase the buffer zone to account for marine mammal movement during the delay time of the detonation by TDFDs and increase marine mammal visual monitoring efforts to ensure that no marine mammal would be in a zone where injury and/or mortality could occur as a result of time-delayed detonation.

In addition, the estimated exposures are based on the probability of the animals occurring in the area when a training event is occurring, and this probability does not change based on the use of TDFDs or implementation of mitigation measures (*i.e.,* the exposure model does not account for how the charge is initiated and assumes no mitigation is being implemented). Other potential effects to marine mammal species and stocks as a result of the proposed mine neutralization training activities remain the same as those analyzed in the proposed IHA (75 FR 64276; October 19, 2010).

Based on the analyses of the potential impacts from the proposed underwater detonation training exercises conducted within the Navy's SSTC action area, including the consideration of TDFD use and the implementation of the improved marine mammal monitoring and mitigation measures, NMFS has preliminarily determined that the modification of the Navy's proposed activities that include taking of marine mammals incidental to underwater detonation using TDFD within the SSTC action area will have a negligible impact on the marine mammal species and stocks, provided that additional mitigation and monitoring measures are implemented.

Endangered Species Act (ESA)

No marine mammal species are listed as endangered or threatened under the ESA with confirmed or possible

occurrence in the study area. Therefore, section 7 consultation under the ESA for NMFS's proposed issuance of an MMPA authorization is not warranted.

National Environmental Policy Act (NEPA)

The Navy has prepared a Final Environmental Impact Statement (EIS) for the proposed SSTC training activities. The FEIS was released in January 2011 and it is available at *http://www.silverstrandtraining complexeis.com/EIS.aspx/*. NMFS is a cooperating agency (as defined by the Council on Environmental Quality (40 CFR 1501.6)) in the preparation of the EIS. NMFS has subsequently adopted the FEIS for the SSTC training activities.

Dated: March 20, 2012.

James H. Lecky,

Director, Office of Protected Resources, National Marine Fisheries Service.

[FR Doc. 2012–7593 Filed 3–29–12; 8:45 am]

BILLING CODE 3510–22–P

DEPARTMENT OF COMMERCE

National Oceanic and Atmospheric Administration

RIN 0648–XB048

Takes of Marine Mammals Incidental to Specified Activities; Low-Energy Marine Geophysical Survey in the Central Pacific Ocean, May Through June, 2012

AGENCY: National Marine Fisheries Service (NMFS), National Oceanic and Atmospheric Administration (NOAA), Commerce.

ACTION: Notice; proposed Incidental Harassment Authorization; request for comments.

SUMMARY: NMFS has received an application from Lamont-Doherty Earth Observatory (L-DEO), a part of Columbia University, for an Incidental Harassment Authorization (IHA) to take marine mammals, by harassment, incidental to conducting a low-energy marine geophysical survey in the central Pacific Ocean, May through June, 2012. Pursuant to the Marine Mammal Protection Act (MMPA), NMFS is requesting comments on its proposal to issue an IHA to L-DEO to incidentally harass, by Level B harassment only, 16 species of marine mammals during the specified activity.

DATES: Comments and information must be received no later than April 28, 2012.

ADDRESSES: Comments on the application should be addressed to P. Michael Payne, Chief, Permits and Conservation Division, Office of Protected Resources, National Marine Fisheries Service, 1315 East-West Highway, Silver Spring, MD 20910. The mailbox address for providing email comments is *ITP.Cody@noaa.gov.* NMFS is not responsible for email comments sent to addresses other than the one provided here. Comments sent via email, including all attachments, must not exceed a 10-megabyte file size.

All comments received are a part of the public record and will generally be posted to *http://www.nmfs.noaa.gov/pr/permits/incidental.htm#applications* without change. All Personal Identifying Information (for example, name, address, etc.) voluntarily submitted by the commenter may be publicly accessible. Do not submit confidential business information or otherwise sensitive or protected information.

An electronic copy of the application containing a list of the references used in this document may be obtained by writing to the above address, telephoning the contact listed here (see **FOR FURTHER INFORMATION CONTACT**) or visiting the internet at: *http://www.nmfs.noaa.gov/pr/permits/incidental.htm#applications.*

The following associated documents are also available at the same internet address: The U.S. National Science Foundation's (NSF) draft Environmental Assessment (EA) Pursuant To The National Environmental Policy Act (NEPA) and Executive Order 12114. The draft EA incorporates an ''Environmental Assessment of a Marine Geophysical Survey by the R/V *Marcus G. Langseth* in the central Pacific Ocean, May 2012,'' prepared by LGL Ltd., Environmental Research Associates (LGL), on behalf of NSF.

Documents cited in this notice may be viewed, by appointment, during regular business hours, at the aforementioned address.

FOR FURTHER INFORMATION CONTACT: Jeannine Cody, Office of Protected Resources, NMFS, 301–427–8401.

SUPPLEMENTARY INFORMATION:

Background

Section 101(a)(5)(D) of the Marine Mammal Protection Act of 1972, as amended (MMPA; 16 U.S.C. 1361 *et seq.*) directs the Secretary of Commerce (Secretary) to authorize, upon request, the incidental, but not intentional, taking of small numbers of marine mammals of a species or population stock, by United States citizens who engage in a specified activity (other than commercial fishing) within a specified geographical region if certain findings are made and, if the taking is limited to harassment, NMFS provides a notice of a proposed authorization to the public for review.

Authorization for the incidental taking of small numbers of marine mammals shall be granted if NMFS finds that the taking will have a negligible impact on the species or stock(s), and will not have an unmitigable adverse impact on the availability of the species or stock(s) for subsistence uses (where relevant). The authorization must set forth the permissible methods of taking, other means of effecting the least practicable adverse impact on the species or stock and its habitat, and requirements pertaining to the mitigation, monitoring and reporting of such takings. NMFS has defined ''negligible impact'' in 50 CFR 216.103 as ''* * * an impact resulting from the specified activity that cannot be reasonably expected to, and is not reasonably likely to, adversely affect the species or stock through effects on annual rates of recruitment or survival.''

Section 101(a)(5)(D) of the MMPA established an expedited process by which citizens of the United States can apply for an authorization to incidentally take small numbers of marine mammals by harassment. Section 101(a)(5)(D) of the MMPA establishes a 45-day time limit for NMFS's review of an application followed by a 30-day public notice and comment period on any proposed authorizations for the incidental harassment of small numbers of marine mammals. Within 45 days of the close of the public comment period, NMFS must either issue or deny the authorization. NMFS must publish a notice in the **Federal Register** within 30 days of its determination to issue or deny the authorization.

Except with respect to certain activities not pertinent here, the MMPA defines ''harassment'' as: ''* * * any act of pursuit, torment, or annoyance which (i) has the potential to injure a marine mammal or marine mammal stock in the wild [Level A harassment]; or (ii) has the potential to disturb a marine mammal or marine mammal stock in the wild by causing disruption of behavioral patterns, including, but not limited to, migration, breathing, nursing, breeding, feeding, or sheltering [Level B harassment].''

Summary of Request

NMFS received an application on December 12, 2012, from L-DEO for the taking by harassment, of marine mammals, incidental to conducting a low-energy marine seismic survey in the central Pacific Ocean. Upon receipt of additional information, NMFS

determined the application complete and adequate on February 28, 2012.

L-DEO, with research funding from the NSF, plans to conduct the survey from May 1 through May 26, 2012 offshore the Line Islands in the central Pacific Ocean. L-DEO plans to use one source vessel, the R/V *Marcus G. Langseth* (*Langseth*), a seismic airgun array and a single hydrophone streamer to conduct the low-energy geophysical survey that will provide the data necessary to understand sedimentation patterns on the flanks of the Line Islands Ridge and to investigate how climate patterns have varied over time in the late Pleistocene period. In addition to the operations of the seismic airgun array and hydrophone streamer, L-DEO intends to operate a multibeam echosounder (MBES), a sub-bottom profiler (SBP), and an acoustic Doppler current profiler (ADCP) continuously throughout the survey except while on station for marine coring activities.

Acoustic stimuli (*i.e.,* increased underwater sound) generated during the operation of the seismic airgun array may have the potential to cause a short-term behavioral disturbance for marine mammals in the survey area. This is the principal means of marine mammal taking associated with these activities and L-DEO has requested an authorization to take 16 species of marine mammals by Level B harassment. Take is not expected to result from the use of the MBES, SBP, ADCP, or during marine coring operations for reasons discussed in this notice. Also, NMFS does not expect take to result from collision with the *Langseth* because it is a single vessel moving at relatively slow speeds (4.6 knots (kts); 8.5 kilometers (km) per hour (km/h); 5.3 miles (mi) per hour (mph)) during seismic acquisition within the survey, for a relatively short period of time (approximately 6 days). It is likely that any marine mammal would be able to avoid the vessel.

Description of the Proposed Specified Activity

L-DEO's proposed seismic survey in the central Pacific Ocean (partly in the Exclusive Economic Zone (EEZ) of the Republic of Kiribati and partly in the U.S. EEZ) is scheduled to commence on May 1, 2012 and end on May 26, 2012. The *Langseth* would depart from Honolulu, Hawaii (HI) on May 1, 2012 and transit to the survey area in the central Pacific Ocean, approximately 1,800 km (1,118.4 mi) south of Hawaii. At the conclusion of the survey activities, the *Langseth* proposes to arrive in Honolulu, HI on May 26, 2012. Some minor deviation from these dates is possible, depending on logistics, weather conditions, and the need to repeat some lines if data quality is substandard. Therefore, NMFS proposes to issue an authorization that is effective from May 1, 2012 to June 11, 2012.

The research program will involve one source vessel, the *Langseth.* Geophysical survey activities will involve conducting seismic surveys at six sites in the Line Islands to determine coring locations (see Figure 1 in L-DEO's application). L-DEO will select coring sites from undisturbed sediments where there is potential for higher-than-normal sedimentation rates. The resulting cores will provide data necessary to understand how important climate patterns such as the El Niño/La Niña-Southern Oscillation and position of the Intertropical Convergence Zone have varied in the late Pleistocene. L-DEO plans to deploy a total of 15 piston cores, 30 gravity cores, and eight multicores during the cruise. The piston and gravity corers have maximum diameters of approximately 90 centimeters (cm) (35 inches (in)) and 45 cm (17 in), respectively. The multi-corer is an eight-legged, cone-shaped frame and a weighted inner frame that holds up to eight plastic core sampling tubes that are 80 cm (31.4 in) long and approximately 10 cm (3.9 in) in diameter. Considering these dimensions, the coring equipment has a very small footprint.

For the seismic component of the research program, the *Langseth* will deploy an array of two, low-energy Sercel Generator Injector (GI) airguns as an energy source. The acoustic receiving system will consist of a 2-km-long (1.2 mi) hydrophone streamer. As the airguns are towed along the survey lines, the hydrophone streamer will receive the returning acoustic signals and transfer the data to the on-board processing system.

The proposed study (*e.g.,* equipment testing, startup, line changes, repeat coverage of any areas, and equipment recovery) will require approximately six days to complete approximately 1,853 square km (km^2) (715.4 square mi (mi^2)) of transect lines. The *Langseth* will conduct additional seismic operations in the survey area associated with turns, airgun testing, and repeat coverage of any areas where the initial data quality is sub-standard. L-DEO has added 25 percent of transect lines (463.2 km^2; 178.8 mi^2) for contingency operations for a total area of 2,316 km^2 (894.2 mi^2).

L-DEO, the *Langseth's* operator, will conduct all planned seismic data acquisition activities, with on-board assistance by the scientists who have proposed the study. The Principal Investigators for this survey are Drs. J. Lynch-Stieglitz (Georgia Institute of Technology) and P. Polissar (L-DEO). The vessel will be self-contained, and the crew will live aboard the vessel for the entire cruise.

Description of the Specified Geographic Region

L-DEO will conduct the proposed survey in international waters in the central Pacific Ocean. The study area will encompass an area in the Line Islands bounded by approximately 0.5–8 degrees (°) South by 156–162° West (see Figure 1 in L-DEO's application). Water depths in the survey area range from approximately 1,100 to 5,000 m (0.68 to 3.1 mi). The proposed seismic survey will be conducted in the EEZ of the Republic of Kiribati and partly in the U.S. EEZ. On behalf of NSF and L-DEO, the U.S. State Department will seek authorization for L-DEO to work in Kiribati's EEZ.

Vessel Specifications

The *Langseth,* owned by NSF, is a seismic research vessel with a propulsion system designed to be as quiet as possible to avoid interference with the seismic signals emanating from the airgun array. The vessel, which has a length of 71.5 meters (m) (235 feet (ft)); a beam of 17.0 m (56 ft); a maximum draft of 5.9 m (19 ft); and a gross tonnage of 3,834 pounds, is powered by two 3,550 horsepower (hp) Bergen BRG–6 diesel engines which drive two propellers. Each propeller has four blades and the shaft typically rotates at 600 or 750 revolutions per minute. The vessel also has an 800-hp bowthruster which is not used during seismic acquisition. The *Langseth's* operation speed during seismic acquisition will be approximately 4.6 kts (8.5 km/h; 5.3 mph) and the cruising speed of the vessel outside of seismic operations is typically 18.5 km/h (11.5 mph or 10 kts).

The *Langseth* will tow a pair of 45- to 105-in^3 Sercel GI airguns, as well as the 2-km-long hydrophone streamer, along predetermined lines (see Figure 1 in L-DEO's application). Given the relatively short streamer length behind the vessel, the turning rate of the vessel while the gear is deployed is much higher than the limit of five degrees per minute for a seismic vessel towing a streamer of more typical length (6 km; 3.7 mi). Thus, the vessel is more maneuverable during operations.

The vessel also has an observation tower from which protected species visual observers (PSVO) will watch for marine mammals before and during the proposed airgun operations. When

stationed on the observation platform, the PSVO's eye level will be approximately 21.5 m (71 ft) above sea level providing the PSVO an unobstructed view around the entire vessel.

Acoustic Source Specifications

Seismic Airguns

The *Langseth* will deploy and tow an array consisting of a pair of 45 to 105 in^3 Sercel GI airguns with a total volume of approximately 210 in^3 at a tow depth of 3 m (9.8 ft). The dominant frequency components range from zero to 188 Hertz (Hz). The array configuration consists of the *Langseth* towing the two GI airguns 8 m (26.2 ft) apart, side-by-side, approximately 50 m (164 ft) behind the vessel. During the survey, each airgun will emit a pulse at approximately 12-second (s) intervals which corresponds to a shot interval of approximately 3.75 m (123 ft) at a speed of approximately 11 km/hr (5.9 kts; 6.8 mph).

The generator chamber of each GI airgun, the one responsible for introducing the sound pulse into the ocean, is either 45 in^3 or 105 in^3, depending on how it is configured. The injector chamber injects air into the previously-generated bubble to maintain its shape, and does not introduce more sound into the water. Depending on the configuration, the total effective volume will be 90 in^3 or 210 in^3. As a precautionary measure, L-DEO assumes that they will use the larger volume.

Metrics Used in This Document

This section includes a brief explanation of the sound measurements frequently used in the discussions of acoustic effects in this document. Sound pressure is the sound force per unit area, and is usually measured in micropascals (μPa), where 1 pascal (Pa) is the pressure resulting from a force of one newton exerted over an area of one square meter. Sound pressure level (SPL) is expressed as the ratio of a measured sound pressure and a reference level. The commonly used reference pressure level in underwater acoustics is 1 μPa, and the units for SPLs are dB re: 1 μPa. SPL (in decibels (dB)) = 20 log (pressure/reference pressure).

SPL is an instantaneous measurement and can be expressed as the peak, the peak-peak (p-p), or the root mean square (rms). Root mean square, which is the square root of the arithmetic average of the squared instantaneous pressure values, is typically used in discussions of the effects of sounds on vertebrates and all references to SPL in this document refer to the root mean square unless otherwise noted. SPL does not take the duration of a sound into account.

Characteristics of the Airgun Pulses

Airguns function by venting high-pressure air into the water which creates an air bubble. The pressure signature of an individual airgun consists of a sharp rise and then fall in pressure, followed by several positive and negative pressure excursions caused by the oscillation of the resulting air bubble. The oscillation of the air bubble transmits sounds downward through the seafloor and the amount of sound transmitted in the near horizontal directions is reduced. However, the airgun array also emits sounds that travel horizontally toward non-target areas.

The nominal source levels of the airgun array used by L-DEO on the *Langseth* is 239 dB re: 1 $\mu Pa_{(p\text{-}p)}$ and the rms value for a given airgun pulse is typically 16 dB re: 1 μPa lower than the peak-to-peak value (Greene, 1997; McCauley *et al.,* 1998, 2000a). However, the difference between rms and peak-to-peak values for a given pulse depends on the frequency content and duration of the pulse, among other factors.

NSF's EA provides a detailed description of L-DEO's modeling for marine seismic source arrays for species mitigation as well as the characteristics of the airgun pulses in Appendix A. These are the nominal source levels applicable to downward propagation. The effective source levels for horizontal propagation are lower than those for downward propagation because of the directional nature of the sound from the airguns. NMFS refers the reviewers to the IHA application and EA documents for additional information.

Predicted Sound Levels for the Airguns

L-DEO has modeled the received sound levels for the paired 105 in^3 GI airgun configuration, in relation to distance and direction from the airguns (see Figure 2 of L-DEO's application). The model does not allow for bottom interactions, and thus is most directly applicable to deep water.

Tolstoy *et al.* (2004, 2009) reported results for propagation measurements of pulses from the *Langseth's* 6-, 10-, 12-, 20-, and 36-airgun arrays and 2 GI airguns in shallow- (approximately 50 m (164 ft)) and deep-water depths (approximately 1,600 m (5,249 ft)) in the Gulf of Mexico. However, Tolstoy *et al.* (2004) did not conduct measurements for the 2 GI airguns in deep water (greater than 1,000 m; 3,280 ft). Results of the Gulf of Mexico calibration studies showed that radii around the airguns for various received levels varied with water depth and that sound propagation varied with array tow depth. L-DEO used the results from the Gulf of Mexico study to determine the algorithm for its model that calculates the exclusion zones (EZ) for the two GI airguns. L-DEO uses these values to designate mitigation zones and to estimate take (described in greater detail in Section VII of L-DEO's application and Section IV of NSF's EA) for marine mammals.

Comparison of the Tolstoy *et al.* (2009) calibration study with L-DEO's model for the *Langseth's* 6-, 10-, 12-, 20-airgun arrays indicated that the model represents the actual received levels, within the first few kilometers, where the predicted EZs are located. However, the model for deep water (greater than 1,000 m; 3,280 ft) overestimated the received sound levels at a given distance but is still valid for defining exclusion zones at various tow depths (Tolstoy *et al.,* 2004). Because the calibration study did not conduct measurements for the 2 GI airgun array in deep water, L-DEO proposed to use the EZs predicted by L-DEO's model for the proposed GI airgun operations in deep water as the EZs are likely conservative given the reported results for the other airgun arrays.

Table 1 summarizes the predicted distances at which sound levels (160-,180-, and 190-dB re: 1 μPa) are expected to be received from the two GI airguns in deep water. To avoid the potential for injury, NMFS (1995, 2000) concluded that cetaceans should not be exposed to pulsed underwater noise at received levels exceeding 180 dB re: 1 μPa. NMFS believes that to avoid the potential for permanent physiological damage (Level A harassment), cetaceans and pinnipeds should not be exposed to pulsed underwater noise at received levels exceeding 180 dB re: 1 μPa and 190 dB re: 1 μPa, respectively. The 180-dB and 190-dB levels are shutdown criteria applicable to cetaceans and pinnipeds, respectively as specified by NMFS (1995, 2000). L-DEO used these levels were used to establish the EZs. If marine mammals are detected within or about to enter the appropriate EZ, L-DEO will shut-down the airguns immediately. NMFS also assumes that marine mammals exposed to levels exceeding 160 dB re: 1 μPa (rms) may experience Level B harassment.

TABLE 1—DISTANCES TO WHICH SOUND LEVELS ≥ 160, 180, 190 DB RE: 1 μPA (RMS) COULD BE RECEIVED IN DEEP WATER DURING THE PROPOSED SEISMIC SURVEY IN THE CENTRAL PACIFIC OCEAN, MAY, 2012

[Distances Are Based on Model Results Provided by L-DEO]

Source and volume	Tow depth (m)	Water depth (m)	Predicted RMS radii distances (m)		
			160 dB	180 dB	190 dB
Two GI airguns (105 in³)	2	Deep (> 1,000)	670	70	20

Multibeam Echosounder

The *Langseth* will operate a Kongsberg EM 122 MBES concurrently during airgun operations to map characteristics of the ocean floor. The hull-mounted MBES emits brief pulses of sound (also called a ping) (10.5 to 13 kilohertz (kHz)) in a fan-shaped beam that extends downward and to the sides of the ship. The transmitting beamwidth is one or two degrees (°) fore-aft and 150° athwartship and the maximum source level is 242 dB re: 1 μPa.

For deep-water operations, each ping consists of eight (in water greater than 1,000 m; 3,280 ft) or four (less than 1,000 m; 3,280 ft) successive, fan-shaped transmissions, from two to 15 milliseconds (ms) in duration and each ensonifying a sector that extends 1° fore-aft. Continuous wave pulses increase from two to 15 milliseconds (ms) long in water depths up to 2,600 m (8,530 ft). The MBES uses frequency-modulated chirp pulses up to 100-ms long in water greater than 2,600 m (8,530 ft). The eight successive transmissions span an overall cross-track angular extent of about 150°, with 2-ms gaps between the pulses for successive sectors.

Sub-bottom Profiler

The *Langseth* will also operate a Knudsen Chirp 3260 SBP concurrently during airgun and MBES operations to provide information about the sedimentary features and bottom topography. The SBP is capable of reaching depths of 10,000 m (6.2 mi). The dominant frequency component of the SBP is 3.5 kHz which is directed downward in a 27°cone by a hull-mounted transducer on the vessel. The nominal power output is 10 kilowatts (kW), but the actual maximum radiated power is three kW or 222 dB re: 1 μPa. The ping duration is up to 64 ms with a pulse interval of one second, but a common mode of operation is to broadcast five pulses at 1-s intervals followed by a 5-s pause.

Acoustic Doppler Current Profiler

The Teledyne OS75 is an ADCP operating at a frequency of 75 kHz, producing a ping every 1.4 s. The system is a four-beam phased array with a beam angle of 30°. Each beam has a width of 4° and there is no overlap. Maximum output power is 1 kW with a maximum depth range of 700 m.

NMFS expects that acoustic stimuli resulting from the proposed operation of the two GI airguns has the potential to harass marine mammals, incidental to the conduct of the proposed seismic survey. NMFS expects these disturbances to be temporary and result in a temporary modification in behavior and/or low-level physiological effects (Level B harassment only) of small numbers of certain species of marine mammals. NMFS does not expect that the movement of the *Langseth,* during the conduct of the seismic survey, has the potential to harass marine mammals because of the relatively slow operation speed of the vessel (4.6 kts; 8.5 km/hr; 5.3 mph) during seismic acquisition. NMFS does not expect that the coring equipment, during the conduct of the seismic survey, has the potential to harass marine mammals because of the relatively small footprint and slow speed of the coring equipment.

Description of the Marine Mammals in the Area of the Proposed Specified Activity

Twenty-six marine mammal species may occur in the proposed survey area, including 19 odontocetes (toothed cetaceans), 6 mysticetes (baleen whales) and one species of pinniped during May through June. Six of these species are listed as endangered under the U.S. Endangered Species Act of 1973 (ESA; 16 U.S.C. 1531 *et seq.*), including the blue (*Balaenoptera musculus*), fin (*Balaenoptera physalus*), humpback (*Megaptera novaeangliae*), sei (*Balaenoptera borealis*), and sperm (*Physeter macrocephalus*) whale and the Hawaiian monk seal (*Monachus schauinslandi*).

Hawaiian monk seals have the potential to transit in the vicinity of the proposed seismic survey, although any occurrence would be rare as they are vagrants to the area. Based on available data, L-DEO does not expect to encounter Hawaiian monk seals within the proposed survey area and does not present analysis for these species. Accordingly, NMFS will not consider this pinniped species in greater detail and the proposed IHA will only address requested take authorizations for mysticetes and odontocetes.

The species of marine mammals expected to be most common in the survey area (all odontocetes) include the pantropical spotted dolphin (*Stenella attenuata*), spinner dolphin (*Stenella longirostris*), and short-finned pilot whale (*Globicephala macrorhynchus*).

The NMFS' Southwest Fisheries Science Center (SWFSC) conducted the only cetacean distribution studies in the survey area. The Pacific Island Cetacean and Ecosystem Assessment Survey (PICEAS), conducted during July through November 2005, estimated the abundance of cetaceans in the U.S. EEZs of Palmyra Atoll, Kingman Reef, Johnston Atoll, and surrounding waters south of Hawaii (Barlow *et al.,* 2008). The Hawaiian Island Cetacean Ecosystem Assessment Survey (HICEAS), conducted in the EEZ of the Hawaiian Islands, approximately 1,400 km north of the survey area in 2002, estimated the abundance and distribution of cetaceans within the area using visual and acoustic methods (Barlow *et al.,* 2004).

Several other studies of marine mammal distribution and abundance have occurred in the wider eastern tropical Pacific Ocean. The most extensive regional distribution and abundance data come primarily from multi-year vessel surveys conducted by NMFS' SWFSC. Researchers conducted the surveys during July to December in an area generally extending from 30° North to 18° South from the coastline to 153° West (Wade and Gerrodette, 1993; Ferguson and Barlow, 2001; Gerrodette *et al.,* 2008; and Jackson *et al.,* 2008). The western boundary of the survey area is ~350 km east of the proposed seismic survey area. Acoustic detections of cetaceans were also reported during summer/fall shipboard surveys in the eastern and central Pacific Ocean (Rankin *et* al. 2008).

Table 2 presents information on the abundance, distribution, and conservation status of the marine mammals that may occur in the proposed survey area in May, 2012.

TABLE 2—HABITAT, ABUNDANCE, AND CONSERVATION STATUS OF MARINE MAMMALS THAT MAY OCCUR IN OR NEAR THE PROPOSED SEISMIC SURVEY AREA IN THE CENTRAL PACIFIC OCEAN

[See text and Tables 2 and 3 in L-DEO's application and environmental analysis for further details]

Species	Occurrence in survey area during May	Habitat	Abundance in the EPT [1]	ESA [2]	Density [3]
Mysticetes:					
Humpback whale	Rare	Mainly nearshore waters and banks	[4] 20,800; 36,600	EN	0
Bryde's whale	Common	Pelagic, coastal	[5] 9,000	NL	0.58
Sei whale	Rare	Mostly pelagic	[6] 10,422	EN	0
Fin whale	Rare	Slope, pelagic	[7] 7260–12,620	EN	0
Blue whale	Rare	Pelagic, coastal	[8] 13,620–18,680	EN	0.01
Minke whale	Rare	Coastal	[9] 1,400	NL	0
Odontocetes:					
Sperm whale	Common	Pelagic, steep topography	[10] 26,053	EN	2.97
Pygmy sperm whale	Uncommon	Deep waters off shelf	N.A.	NL	0.03
Dwarf sperm whale	Common	Deep, shelf, slope	[11] 11,200	NL	7.65
Blainville's beaked whale	Uncommon	Pelagic	[9] 20,000	NL	0.35
Cuvier's beaked whale	Common	Slope, pelagic	[12] 291	NL	6.66
Ginkgo-toothed beaked whale	Rare	Pelagic	[13] 25,300	NL	0.35
Longman's beaked whale	Uncommon	Pelagic	[13] 25,300	NL	0.44
Rough-toothed dolphin	Common	Mainly pelagic	107,633	NL	1.24
Bottlenose dolphin	Common	Coastal, shelf, deep	335,834	NL	4.94
Pantropical spotted dolphin	Common	Coastal and pelagic	[14] 439,208	NL	120.4
Spinner dolphin	Common	Coastal and pelagic	[15] 1,797,716	NL	183.5
Striped dolphin	Common	Off continental shelf	964,362	NL	16.45
Fraser's dolphin	Common	Pelagic	[9] 289,300	NL	4.47
Risso's dolphin	Common	Shelf, slope, seamounts	110,457	NL	0.81
Melon-headed whale	Common	Pelagic	[9] 45,400	NL	1.29
Pygmy killer whale	Uncommon	Pelagic, coastal	[9] 38,900	NL	0
False killer whale	Common	Pelagic	[16] 1,329; [9] 39,800	NL	0.10
Killer whale	Rare	Widely distributed	[17] 8,500	NL	0.15
Short-finned pilot whale	Common	Pelagic, high-relief	[6] 589,315	NL	5.07

N.A. Not available or not assessed.
[1] Abundance from Gerrodette *et al.* (2008) unless otherwise indicated.
[2] U.S. Endangered Species Act: EN = Endangered, T = Threatened, NL = Not listed.
[3] Density (#/1000 km^2) estimates as listed in Table 3 of the application. Cetacean densities are based on NMFS SWFSC ETP ship transect surveys conducted in 1986–2006 from predictive modeling (Barlow *et al.,* 2009; Read *et al.,* 2009) or in 2002 from Barlow (2006). Densities are corrected for *f*(0) and *g*(0). Where no source is given, the species was not included in Read *et al.* (2009) or Barlow (2006).
[4] North Pacific (Barlow *et al.* 2009a) and Southern Hemisphere (Reilly *et al.* 2008).
[5] North Pacific (Wada 1976).
[6] Gerrodette and Forcada (2002).
[7] North Pacific (Tillman 1977).
[8] Ohsumi and Wada (1974).
[9] Wade and Gerrodette (1993).
[10] Whitehead (2002).
[11] Estimate mostly for *K. sima* but may also include *K. breviceps* (Wade and Gerrodette 1993).
[12] Ferguson and Barlow (2003).
[13] This estimate includes all species of the genus *Mesoplodon* (Wade and Gerrodette 1993).
[14] For the western/southern offshore spotted dolphin.
[15] For the whitebelly and the eastern spinner dolphin stocks (Gerrodette *et al.* 2008).
[16] Palmyra stock (Barlow and Rankin 2007).
[17] Ford (2009).

NMFS refers the reader to Sections III and IV of L-DEO's application for detailed information regarding the abundance and distribution, population status, and life history and behavior of these species and their occurrence in the proposed project area. The application also presents how L-DEO calculated the estimated densities for the marine mammals in the proposed survey area. NMFS has reviewed these data and determined them to be the best available scientific information for the purposes of the proposed IHA.

Potential Effects on Marine Mammals

Acoustic stimuli generated by the operation of the airguns, which introduce sound into the marine environment, may have the potential to cause Level B harassment of marine mammals in the proposed survey area. The effects of sounds from airgun operations might include one or more of the following: Tolerance, masking of natural sounds, behavioral disturbance, temporary or permanent impairment, or non-auditory physical or physiological effects (Richardson *et al.,* 1995; Gordon *et al.,* 2004; Nowacek *et al.,* 2007; Southall *et al.,* 2007).

Permanent hearing impairment, in the unlikely event that it occurred, would constitute injury, but temporary threshold shift (TTS) is not an injury (Southall *et al.,* 2007). Although the possibility cannot be entirely excluded, it is unlikely that the proposed project would result in any cases of temporary or permanent hearing impairment, or any significant non-auditory physical or physiological effects. Based on the available data and studies described here, some behavioral disturbance is expected, but NMFS expects the disturbance to be localized and short-term.

Tolerance to Sound

Studies on marine mammals' tolerance to sound in the natural environment are relatively rare. Richardson *et al.* (1995) defines tolerance as the occurrence of marine

mammals in areas where they are exposed to human activities or man-made noise. In many cases, tolerance develops by the animal habituating to the stimulus (*i.e.,* the gradual waning of responses to a repeated or ongoing stimulus) (Richardson, *et al.,* 1995; Thorpe, 1963), but because of ecological or physiological requirements, many marine animals may need to remain in areas where they are exposed to chronic stimuli (Richardson, *et al.,* 1995).

Numerous studies have shown that pulsed sounds from airguns are often readily detectable in the water at distances of many kilometers. Malme *et al.,* (1985) studied the responses of humpback whales on their summer feeding grounds in southeast Alaska to seismic pulses from a airgun with a total volume of 100-in^3. They noted that the whales did not exhibit persistent avoidance when exposed to the airgun and concluded that there was no clear evidence of avoidance, despite the possibility of subtle effects, at received levels up to 172 dB: re 1 μPa.

Weir (2008) observed marine mammal responses to seismic pulses from a 24-airgun array firing a total volume of either 5,085 in^3 or 3,147 in^3 in Angolan waters between August 2004 and May 2005. She recorded a total of 207 sightings of humpback whales (n=66), sperm whales (n=124), and Atlantic spotted dolphins (n=17) and reported that there were no significant differences in encounter rates (sightings/hr) for humpback and sperm whales according to the airgun array's operational status (*i.e.,* active versus silent).

Masking of Natural Sounds

The term masking refers to the inability of a subject to recognize the occurrence of an acoustic stimulus as a result of the interference of another acoustic stimulus (Clark *et al.,* 2009). Introduced underwater sound may, through masking, reduce the effective communication distance of a marine mammal species if the frequency of the source is close to that used as a signal by the marine mammal, and if the anthropogenic sound is present for a significant fraction of the time (Richardson *et al.,* 1995).

Masking effects of pulsed sounds (even from large arrays of airguns) on marine mammal calls and other natural sounds are expected to be limited. Because of the intermittent nature and low duty cycle of seismic airgun pulses, animals can emit and receive sounds in the relatively quiet intervals between pulses. However, in some situations, reverberation occurs for much or the entire interval between pulses (*e.g.,* Simard *et al.,* 2005; Clark and Gagnon, 2006) which could mask calls. Some baleen and toothed whales are known to continue calling in the presence of seismic pulses, and their calls can usually be heard between the seismic pulses (*e.g.,* Richardson *et al.,* 1986; McDonald *et al.,* 1995; Greene *et al.,* 1999; Nieukirk *et al.,* 2004; Smultea *et al.,* 2004; Holst *et al.,* 2005a,b, 2006; and Dunn and Hernandez, 2009). However, Clark and Gagnon (2006) reported that fin whales in the northeast Pacific Ocean went silent for an extended period starting soon after the onset of a seismic survey in the area. Similarly, there has been one report that sperm whales ceased calling when exposed to pulses from a very distant seismic ship (Bowles *et al.,* 1994). However, more recent studies found that they continued calling in the presence of seismic pulses (Madsen *et al.,* 2002; Tyack *et al.,* 2003; Smultea *et al.,* 2004; Holst *et al.,* 2006; and Jochens *et al.,* 2008). Dolphins and porpoises commonly are heard calling while airguns are operating (*e.g.,* Gordon *et al.,* 2004; Smultea *et al.,* 2004; Holst *et al.,* 2005a, b; and Potter *et al.,* 2007). The sounds important to small odontocetes are predominantly at much higher frequencies than are the dominant components of airgun sounds, thus limiting the potential for masking.

In general, NMFS expects the masking effects of seismic pulses to be minor, given the normally intermittent nature of seismic pulses. Refer to Appendix A(4) of L-DEO's environmental analysis for a more detailed discussion of masking effects on marine mammals.

Behavioral Disturbance

Disturbance includes a variety of effects, including subtle to conspicuous changes in behavior, movement, and displacement. Reactions to sound, if any, depend on species, state of maturity, experience, current activity, reproductive state, time of day, and many other factors (Richardson *et al.,* 1995; Wartzok *et al.,* 2004; Southall *et al.,* 2007; Weilgart, 2007). If a marine mammal does react briefly to an underwater sound by changing its behavior or moving a small distance, the impacts of the change are unlikely to be significant to the individual, let alone the stock or population. However, if a sound source displaces marine mammals from an important feeding or breeding area for a prolonged period, impacts on individuals and populations could be significant (*e.g.,* Lusseau and Bejder, 2007; Weilgart, 2007). Given the many uncertainties in predicting the quantity and types of impacts of noise on marine mammals, it is common practice to estimate how many mammals would be present within a particular distance of industrial activities and/or exposed to a particular level of industrial sound. In most cases, this approach likely overestimates the numbers of marine mammals that would be affected in some biologically-important manner.

The sound criteria used to estimate how many marine mammals might be disturbed to some biologically-important degree by a seismic program are based primarily on behavioral observations of a few species. Scientists have conducted detailed studies on humpback, gray, bowhead (*Balaena mysticetus*), and sperm whales. Less detailed data are available for some other species of baleen whales, small toothed whales, and sea otters (*Enhydra lutris*), but for many species there are no data on responses to marine seismic surveys.

Baleen Whales—Baleen whales generally tend to avoid operating airguns, but avoidance radii are quite variable (reviewed in Richardson, *et al.,* 1995). Whales are often reported to show no overt reactions to pulses from large arrays of airguns at distances beyond a few kilometers, even though the airgun pulses remain well above ambient noise levels out to much longer distances. However, as reviewed in Appendix A (5.1) of L-DEO's environmental analysis, baleen whales exposed to strong noise pulses from airguns often react by deviating from their normal migration route and/or interrupting their feeding and moving away. In the cases of migrating gray and bowhead whales, the observed changes in behavior appeared to be of little or no biological consequence to the animals (Richardson *et al.,* 1995). They simply avoided the sound source by displacing their migration route to varying degrees, but within the natural boundaries of the migration corridors.

Studies of gray, bowhead, and humpback whales have shown that seismic pulses with received levels of 160 to 170 dB re: 1 μPa seem to cause obvious avoidance behavior in a substantial fraction of the animals exposed (Malme *et al.,* 1986, 1988; Richardson *et al.,* 1995). In many areas, seismic pulses from large arrays of airguns diminish to those levels at distances ranging from four to 15 km from the source. A substantial proportion of the baleen whales within those distances may show avoidance or other strong behavioral reactions to the airgun array. Subtle behavioral changes sometimes become evident at somewhat lower received levels, and studies summarized in Appendix A(5) of NSF's EA have shown that some species of

baleen whales, notably bowhead and humpback whales, at times show strong avoidance at received levels lower than 160–170 dB re: 1 μPa.

Researchers have studied the responses of humpback whales to seismic surveys during migration, feeding during the summer months, breeding while offshore from Angola, and wintering offshore from Brazil. McCauley *et al.* (1998, 2000a) studied the responses of humpback whales off western Australia to a full-scale seismic survey with a 16-airgun array (2,678-in^3) and to a single, 20-in^3 airgun with source level of 227 dB re: 1 μPa (p-p). In the 1998 study, the researchers documented that avoidance reactions began at five to eight km (3.1 to 4.9 mi) from the array, and that those reactions kept most pods approximately three to four km (1.9 to 2.5 mi) from the operating seismic boat. In the 2000 study, McCauley *et al.* noted localized displacement during migration of four to five km (2.5 to 3.1 mi) by traveling pods and seven to 12 km (4.3 to 7.5 mi) by more sensitive resting pods of cow-calf pairs. Avoidance distances with respect to the single airgun were smaller but consistent with the results from the full array in terms of the received sound levels. The mean received level for initial avoidance of an approaching airgun was 140 dB re: 1 μPa for humpback pods containing females, and at the mean closest point of approach distance, the received level was 143 dB re: 1 μPa. The initial avoidance response generally occurred at distances of five to eight km (3.1 to 4.9 mi) from the airgun array and two km (1.2 mi) from the single airgun. However, some individual humpback whales, especially males, approached within distances of 100 to 400 m (328 to 1,312 ft), where the maximum received level was 179 dB re: 1 μPa.

Data collected by observers during several seismic surveys in the northwest Atlantic Ocean showed that sighting rates of humpback whales were significantly greater during non-seismic periods compared with periods when a full array was operating (Moulton and Holst, 2010). In addition, humpback whales were more likely to swim away and less likely to swim towards a vessel during seismic versus non-seismic periods (Moulton and Holst, 2010).

Humpback whales on their summer feeding grounds in Frederick Sound and Stephens Passage, Alaska did not exhibit persistent avoidance when exposed to seismic pulses from a 1.64–L (100-in^3) airgun (Malme *et al.,* 1985). Some humpbacks seemed ''startled'' at received levels of 150 to 169 dB re: 1 μPa. Malme *et al.* (1985) concluded that there was no clear evidence of avoidance, despite the possibility of subtle effects, at received levels up to 172 re: 1 μPa.

Other studies have suggested that south Atlantic humpback whales wintering off Brazil may be displaced or even strand upon exposure to seismic surveys (Engel *et al.,* 2004). Although, the evidence for this was circumstantial and subject to alternative explanations (IAGC, 2004). Also, the evidence was not consistent with subsequent results from the same area of Brazil (Parente *et al.,* 2006), or with direct studies of humpbacks exposed to seismic surveys in other areas and seasons. After allowance for data from subsequent years, there was ''no observable direct correlation'' between strandings and seismic surveys (IWC, 2007: 236).

There are no data on reactions of right whales to seismic surveys, but results from the closely-related bowhead whale show that their responsiveness can be quite variable depending on their activity (migrating versus feeding). Bowhead whales migrating west across the Alaskan Beaufort Sea in autumn, in particular, are unusually responsive, with substantial avoidance occurring out to distances of 20 to 30 km (12.4 to 18.6 mi) from a medium-sized airgun source at received sound levels of approximately 120 to 130 dB re: 1 μPa (Miller *et al.,* 1999; Richardson *et al.,* 1999; see Appendix A(5) of NSF's EA). However, more recent research on bowhead whales (Miller *et al.,* 2005; Harris *et al.,* 2007) corroborates earlier evidence that, during the summer feeding season, bowheads are not as sensitive to seismic sources. Nonetheless, subtle but statistically significant changes in surfacing–respiration–dive cycles were evident upon statistical analysis (Richardson *et al.,* 1986). In the summer, bowheads typically begin to show avoidance reactions at received levels of about 152 to 178 dB re: 1 μPa (Richardson *et al.,* 1986, 1995; Ljungblad *et al.,* 1988; Miller *et al.,* 2005).

Reactions of migrating and feeding (but not wintering) gray whales to seismic surveys have been studied. Malme *et al.* (1986, 1988) studied the responses of feeding eastern Pacific gray whales to pulses from a single 100-in^3 airgun off St. Lawrence Island in the northern Bering Sea. They estimated, based on small sample sizes, that 50 percent of feeding gray whales stopped feeding at an average received pressure level of 173 dB re: 1 μPa on an (approximate) rms basis, and that 10 percent of feeding whales interrupted feeding at received levels of 163 dB re: 1 μPa. Those findings were generally consistent with the results of experiments conducted on larger numbers of gray whales that were migrating along the California coast (Malme *et al.,* 1984; Malme and Miles, 1985), and western Pacific gray whales feeding off Sakhalin Island, Russia (Wursig *et al.,* 1999; Gailey *et al.,* 2007; Johnson *et al.,* 2007; Yazvenko *et al.,* 2007a,b), along with data on gray whales off British Columbia (Bain and Williams, 2006).

Various species of *Balaenoptera* (blue, sei, fin, and minke whales) have occasionally been seen in areas ensonified by airgun pulses (Stone, 2003; MacLean and Haley, 2004; Stone and Tasker, 2006), and calls from blue and fin whales have been localized in areas with airgun operations (*e.g.,* McDonald *et al.,* 1995; Dunn and Hernandez, 2009; Castellote *et al.,* 2010). Sightings by observers on seismic vessels off the United Kingdom from 1997 to 2000 suggest that, during times of good sightability, sighting rates for mysticetes (mainly fin and sei whales) were similar when large arrays of airguns were shooting vs. silent (Stone, 2003; Stone and Tasker, 2006). However, these whales tended to exhibit localized avoidance, remaining significantly further (on average) from the airgun array during seismic operations compared with non-seismic periods (Stone and Tasker, 2006). Castellote *et al.* (2010) also observed localized avoidance by fin whales during seismic airgun events in the western Mediterranean Sea and adjacent Atlantic waters from 2006–2009. They reported that singing fin whales moved away from an operating airgun array for a time period that extended beyond the duration of the airgun activity.

Ship-based monitoring studies of baleen whales (including blue, fin, sei, minke, and whales) in the northwest Atlantic found that overall, this group had lower sighting rates during seismic versus non-seismic periods (Moulton and Holst, 2010). Baleen whales as a group were also seen significantly farther from the vessel during seismic compared with non-seismic periods, and they were more often seen to be swimming away from the operating seismic vessel (Moulton and Holst, 2010). Blue and minke whales were initially sighted significantly farther from the vessel during seismic operations compared to non-seismic periods; the same trend was observed for fin whales (Moulton and Holst, 2010). Minke whales were most often observed to be swimming away from the vessel when seismic operations were underway (Moulton and Holst, 2010).

Data on short-term reactions by cetaceans to impulsive noises are not necessarily indicative of long-term or biologically significant effects. It is not known whether impulsive sounds affect reproductive rate or distribution and habitat use in subsequent days or years. However, gray whales have continued to migrate annually along the west coast of North America with substantial increases in the population over recent years, despite intermittent seismic exploration (and much ship traffic) in that area for decades (Appendix A in Malme *et al.,* 1984; Richardson *et al.,* 1995; Allen and Angliss, 2011). The western Pacific gray whale population did not seem affected by a seismic survey in its feeding ground during a previous year (Johnson *et al.,* 2007). Similarly, bowhead whales have continued to travel to the eastern Beaufort Sea each summer, and their numbers have increased notably, despite seismic exploration in their summer and autumn range for many years (Richardson *et al.,* 1987; Allen and Agliss, 2011).

Toothed Whales—Little systematic information is available about reactions of toothed whales to noise pulses. Few studies similar to the more extensive baleen whale/seismic pulse work summarized earlier and (in more detail) in Appendix B of NSF's EA have been reported for toothed whales. However, there are recent systematic studies on sperm whales (*e.g.,* Gordon *et al.,* 2006; Madsen *et al.,* 2006; Winsor and Mate, 2006; Jochens *et al.,* 2008; Miller *et al.,* 2009). There is an increasing amount of information about responses of various odontocetes to seismic surveys based on monitoring studies (*e.g.,* Stone, 2003; Smultea *et al.,* 2004; Moulton and Miller, 2005; Bain and Williams, 2006; Holst *et al.,* 2006; Stone and Tasker, 2006; Potter *et al.,* 2007; Hauser *et al.,* 2008; Holst and Smultea, 2008; Weir, 2008; Barkaszi *et al.,* 2009; Richardson *et al.,* 2009; Moulton and Holst, 2010).

Seismic operators and protected species observers (PSOs) on seismic vessels regularly see dolphins and other small toothed whales near operating airgun arrays, but in general there is a tendency for most delphinids to show some avoidance of operating seismic vessels (*e.g.,* Goold, 1996a,b,c; Calambokidis and Osmek, 1998; Stone, 2003; Moulton and Miller, 2005; Holst *et al.,* 2006; Stone and Tasker, 2006; Weir, 2008; Richardson *et al.,* 2009; Barkaszi *et al.,* 2009; Moulton and Holst, 2010). Some dolphins seem to be attracted to the seismic vessel and floats, and some ride the bow wave of the seismic vessel even when large arrays of airguns are firing (*e.g.,* Moulton and Miller, 2005). Nonetheless, small toothed whales more often tend to head away, or to maintain a somewhat greater distance from the vessel, when a large array of airguns is operating than when it is silent (*e.g.,* Stone and Tasker, 2006; Weir, 2008, Barry *et al.,* 2010; Moulton and Holst, 2010). In most cases, the avoidance radii for delphinids appear to be small, on the order of one km or less, and some individuals show no apparent avoidance. The beluga whale (*Delphinapterus leucas*) is a species that (at least at times) shows long-distance avoidance of seismic vessels. Summer aerial surveys conducted in the southeastern Beaufort Sea reported that sighting rates of beluga whales were significantly lower at distances of 10 to 20 km (6.2 to 12.4 mi) from an operating airgun array compared to distances of 20 to 30 km (12.4 to 18.6 mi). Further, PSOs on seismic boats in that area have rarely reported sighting beluga whales (Miller *et al.,* 2005; Harris *et al.,* 2007).

Captive bottlenose dolphins (*Tursiops truncatus*) and beluga whales exhibited changes in behavior when exposed to strong pulsed sounds similar in duration to those typically used in seismic surveys (Finneran *et al.,* 2000, 2002, 2005). However, the animals tolerated high received levels of sound before exhibiting aversive behaviors.

Results for porpoises depend on species. The limited available data suggest that harbor porpoises (*Phocoena phocoena*) show stronger avoidance of seismic operations than do Dall's porpoises (Stone, 2003; MacLean and Koski, 2005; Bain and Williams, 2006; Stone and Tasker, 2006). Dall's porpoises seem relatively tolerant of airgun operations (MacLean and Koski, 2005; Bain and Williams, 2006), although they too have been observed to avoid large arrays of operating airguns (Calambokidis and Osmek, 1998; Bain and Williams, 2006). This apparent difference in responsiveness of these two porpoise species is consistent with their relative responsiveness to boat traffic and some other acoustic sources (Richardson *et al.,* 1995; Southall *et al.,* 2007).

Most studies of sperm whales exposed to airgun sounds indicate that the sperm whale shows considerable tolerance of airgun pulses (*e.g.,* Stone, 2003; Moulton *et al.,* 2005, 2006a; Stone and Tasker, 2006; Weir, 2008). In most cases the whales do not show strong avoidance, and they continue to call (see Appendix B of NSF's EA for review). However, controlled exposure experiments in the Gulf of Mexico indicate that foraging behavior was altered upon exposure to airgun sound (Jochens *et al.,* 2008; Miller *et al.,* 2009; Tyack, 2009).

There are almost no specific data on the behavioral reactions of beaked whales to seismic surveys. However, some northern bottlenose whales (*Hyperoodon ampullatus*) remained in the general area and continued to produce high-frequency clicks when exposed to sound pulses from distant seismic surveys (Gosselin and Lawson, 2004; Laurinolli and Cochrane, 2005; Simard *et al.,* 2005). Most beaked whales tend to avoid approaching vessels of other types (*e.g.,* Wursig *et al.,* 1998). They may also dive for an extended period when approached by a vessel (*e.g.,* Kasuya, 1986), although it is uncertain how much longer such dives may be as compared to dives by undisturbed beaked whales, which also are often quite long (Baird *et al.,* 2006; Tyack *et al.,* 2006). Based on a single observation, Aguilar-Soto *et al.* (2006) suggested that foraging efficiency of Cuvier's beaked whales (*Ziphius cavirostris*) may be reduced by close approach of vessels. In any event, it is likely that most beaked whales would also show strong avoidance of an approaching seismic vessel, although this has not been documented explicitly. In fact, Moulton and Holst (2010) reported 15 sightings of beaked whales during seismic studies in the Northwest Atlantic; seven of those sightings were made at times when at least one airgun was operating. There was little evidence to indicate that beaked whale behavior was affected by airgun operations; sighting rates and distances were similar during seismic and non-seismic periods (Moulton and Holst, 2010).

There are increasing indications that some beaked whales tend to strand when naval exercises involving mid-frequency sonar operation are ongoing nearby (*e.g.,* Simmonds and Lopez-Jurado, 1991; Frantzis, 1998; NOAA and USN, 2001; Jepson *et al.,* 2003; Hildebrand, 2005; Barlow and Gisiner, 2006; see also the Stranding and Mortality section in this notice). These strandings are apparently a disturbance response, although auditory or other injuries or other physiological effects may also be involved. Whether beaked whales would ever react similarly to seismic surveys is unknown. Seismic survey sounds are quite different from those of the sonar in operation during the above-cited incidents.

Odontocete reactions to large arrays of airguns are variable and, at least for delphinids and Dall's porpoises, seem to be confined to a smaller radius than has been observed for the more responsive of the mysticetes, belugas, and harbor

porpoises (See Appendix A of NSF's EA).

Pinnipeds—Pinnipeds are not likely to show a strong avoidance reaction to the airgun array. Visual monitoring from seismic vessels has shown only slight (if any) avoidance of airguns by pinnipeds, and only slight (if any) changes in behavior, see Appendix B(5) of NSF's EA. In the Beaufort Sea, some ringed seals avoided an area of 100 m (328 ft) to (at most) a few hundred meters around seismic vessels, but many seals remained within 100 to 200 m (328 to 656 ft) of the trackline as the operating airgun array passed by (*e.g.,* Harris *et al.,* 2001; Moulton and Lawson, 2002; Miller *et al.,* 2005). Ringed seal sightings averaged somewhat farther away from the seismic vessel when the airguns were operating than when they were not, but the difference was small (Moulton and Lawson, 2002). Similarly, in Puget Sound, sighting distances for harbor seals and California sea lions tended to be larger when airguns were operating (Calambokidis and Osmek, 1998). Previous telemetry work suggests that avoidance and other behavioral reactions may be stronger than evident to date from visual studies (Thompson *et al.,* 1998).

Hearing Impairment and Other Physical Effects

Exposure to high intensity sound for a sufficient duration may result in auditory effects such as a noise-induced threshold shift—an increase in the auditory threshold after exposure to noise (Finneran *et al.,* 2005). Factors that influence the amount of threshold shift include the amplitude, duration, frequency content, temporal pattern, and energy distribution of noise exposure. The magnitude of hearing threshold shift normally decreases over time following cessation of the noise exposure. The amount of threshold shift just after exposure is called the initial threshold shift. If the threshold shift eventually returns to zero (*i.e.,* the threshold returns to the pre-exposure value), it is called temporary threshold shift (TTS) (Southall *et al.,* 2007).

Researchers have studied TTS in certain captive odontocetes and pinnipeds exposed to strong sounds (reviewed in Southall *et al.,* 2007). However, there has been no specific documentation of TTS let alone permanent hearing damage, *i.e.,* permanent threshold shift (PTS), in free-ranging marine mammals exposed to sequences of airgun pulses during realistic field conditions.

Temporary Threshold Shift—TTS is the mildest form of hearing impairment that can occur during exposure to a strong sound (Kryter, 1985). While experiencing TTS, the hearing threshold rises and a sound must be stronger in order to be heard. At least in terrestrial mammals, TTS can last from minutes or hours to (in cases of strong TTS) days. For sound exposures at or somewhat above the TTS threshold, hearing sensitivity in both terrestrial and marine mammals recovers rapidly after exposure to the noise ends. Few data on sound levels and durations necessary to elicit mild TTS have been obtained for marine mammals, and none of the published data concern TTS elicited by exposure to multiple pulses of sound. Available data on TTS in marine mammals are summarized in Southall *et al.* (2007). Table 1 (introduced earlier in this document) presents the distances from the *Langseth's* airguns at which the received energy level (per pulse, flat-weighted) would be expected to be greater than or equal to 180 dB re: 1 μPa.

To avoid the potential for injury, NMFS (1995, 2000) concluded that cetaceans should not be exposed to pulsed underwater noise at received levels exceeding 180 dB re: 1 μPa. NMFS believes that to avoid the potential for permanent physiological damage (Level A harassment), cetaceans should not be exposed to pulsed underwater noise at received levels exceeding 180 dB re: 1 μPa. The 180-dB level is a shutdown criterion applicable to cetaceans, as specified by NMFS (2000); these levels were used to establish the EZs. NMFS also assumes that cetaceans exposed to SPLs exceeding 160 dB re: 1 μPa may experience Level B harassment.

Researchers have derived TTS information for odontocetes from studies on the bottlenose dolphin and beluga. For the one harbor porpoise tested, the received level of airgun sound that elicited onset of TTS was lower (Lucke *et al.,* 2009). If these results from a single animal are representative, it is inappropriate to assume that onset of TTS occurs at similar received levels in all odontocetes (*cf.* Southall *et al.,* 2007). Some cetaceans apparently can incur TTS at considerably lower sound exposures than are necessary to elicit TTS in the beluga or bottlenose dolphin.

For baleen whales, there are no data, direct or indirect, on levels or properties of sound that are required to induce TTS. The frequencies to which baleen whales are most sensitive are assumed to be lower than those to which odontocetes are most sensitive, and natural background noise levels at those low frequencies tend to be higher. As a result, auditory thresholds of baleen whales within their frequency band of best hearing are believed to be higher (less sensitive) than are those of odontocetes at their best frequencies (Clark and Ellison, 2004). From this, it is suspected that received levels causing TTS onset may also be higher in baleen whales (Southall *et al.,* 2007). For this proposed study, L-DEO expects no cases of TTS given the low abundance of baleen whales in the planned study area at the time of the survey, and the strong likelihood that baleen whales would avoid the approaching airguns (or vessel) before being exposed to levels high enough for TTS to occur.

In pinnipeds, TTS thresholds associated with exposure to brief pulses (single or multiple) of underwater sound have not been measured. Initial evidence from more prolonged (nonpulse) exposures suggested that some pinnipeds (harbor seals in particular) incur TTS at somewhat lower received levels than do small odontocetes exposed for similar durations (Kastak *et al.,* 1999, 2005; Ketten *et al.,* 2001). The indirectly estimated TTS threshold for pulsed sounds would be approximately 181 to 186 dB re: 1 μPa (Southall *et al.,* 2007), or a series of pulses for which the highest SEL values are a few dB lower. Corresponding values for California sea lions and northern elephant seals are likely to be higher (Kastak *et al.,* 2005).

Permanent Threshold Shift—When PTS occurs, there is physical damage to the sound receptors in the ear. In severe cases, there can be total or partial deafness, whereas in other cases, the animal has an impaired ability to hear sounds in specific frequency ranges (Kryter, 1985). There is no specific evidence that exposure to pulses of airgun sound can cause PTS in any marine mammal, even with large arrays of airguns. However, given the possibility that mammals close to an airgun array might incur at least mild TTS, there has been further speculation about the possibility that some individuals occurring very close to airguns might incur PTS (*e.g.,* Richardson *et al.,* 1995, p. 372*ff;* Gedamke *et al.,* 2008). Single or occasional occurrences of mild TTS are not indicative of permanent auditory damage, but repeated or (in some cases) single exposures to a level well above that causing TTS onset might elicit PTS.

Relationships between TTS and PTS thresholds have not been studied in marine mammals, but are assumed to be similar to those in humans and other terrestrial mammals. PTS might occur at a received sound level at least several dBs above that inducing mild TTS if the animal were exposed to strong sound pulses with rapid rise times—see

Appendix A(6) of NSF's EA. Based on data from terrestrial mammals, a precautionary assumption is that the PTS threshold for impulse sounds (such as airgun pulses as received close to the source) is at least 6 dB higher than the TTS threshold on a peak-pressure basis, and probably greater than six dB (Southall *et al.,* 2007).

Given the higher level of sound necessary to cause PTS as compared with TTS, it is considerably less likely that PTS would occur. Baleen whales generally avoid the immediate area around operating seismic vessels, as do some other marine mammals.

Stranding and Mortality

When a live or dead marine mammal swims or floats onto shore and becomes ''beached'' or incapable of returning to sea, the event is termed a ''stranding'' (Geraci *et al.,* 1999; Perrin and Geraci, 2002; Geraci and Lounsbury, 2005; NMFS, 2007). The legal definition for a stranding under the MMPA is that ''(A) a marine mammal is dead and is (i) on a beach or shore of the United States; or (ii) in waters under the jurisdiction of the United States (including any navigable waters); or (B) a marine mammal is alive and is (i) on a beach or shore of the United States and is unable to return to the water; (ii) on a beach or shore of the United States and, although able to return to the water, is in need of apparent medical attention; or (iii) in the waters under the jurisdiction of the United States (including any navigable waters), but is unable to return to its natural habitat under its own power or without assistance'' (16 U.S.C. 1421h).

Marine mammals are known to strand for a variety of reasons, such as infectious agents, biotoxicosis, starvation, fishery interaction, ship strike, unusual oceanographic or weather events, sound exposure, or combinations of these stressors sustained concurrently or in series. However, the cause or causes of most strandings are unknown (Geraci *et al.,* 1976; Eaton, 1979; Odell *et al.,* 1980; Best, 1982). Numerous studies suggest that the physiology, behavior, habitat relationships, age, or condition of cetaceans may cause them to strand or might pre-dispose them to strand when exposed to another phenomenon. These suggestions are consistent with the conclusions of numerous other studies that have demonstrated that combinations of dissimilar stressors commonly combine to kill an animal or dramatically reduce its fitness, even though one exposure without the other does not produce the same result (Chroussos, 2000; Creel, 2005; DeVries *et al.,* 2003; Fair and Becker, 2000; Foley *et al.,* 2001; Moberg, 2000; Relyea, 2005a; 2005b, Romero, 2004; Sih *et al.,* 2004).

Strandings Associated with Military Active Sonar–Several sources have published lists of mass stranding events of cetaceans in an attempt to identify relationships between those stranding events and military active sonar (Hildebrand, 2004; IWC, 2005; Taylor *et al.,* 2004). For example, based on a review of stranding records between 1960 and 1995, the International Whaling Commission (2005) identified ten mass stranding events and concluded that, out of eight stranding events reported from the mid-1980s to the summer of 2003, seven had been coincident with the use of mid-frequency active sonar and most involved beaked whales.

Over the past 12 years, there have been five stranding events coincident with military MF active sonar use in which exposure to sonar is believed by NMFS and the Navy to have been a contributing factor to strandings: Greece (1996); the Bahamas (2000); Madeira (2000); Canary Islands (2002); and Spain (2006). NMFS refers the reader to Cox *et al.* (2006) for a summary of common features shared by the strandings events in Greece (1996), Bahamas (2000), Madeira (2000), and Canary Islands (2002); and Fernandez *et al.,* (2005) for an additional summary of the Canary Islands 2002 stranding event.

Potential for Stranding from Seismic Surveys—The association of strandings of beaked whales with naval exercises involving mid-frequency active sonar and, in one case, an L-DEO seismic survey (Malakoff, 2002; Cox *et al.,* 2006), has raised the possibility that beaked whales exposed to strong ''pulsed'' sounds may be especially susceptible to injury and/or behavioral reactions that can lead to stranding (*e.g.,* Hildebrand, 2005; Southall *et al.,* 2007). Appendix A(6) of NSF's EA provides additional details.

Specific sound-related processes that lead to strandings and mortality are not well documented, but may include:

(1) Swimming in avoidance of a sound into shallow water;

(2) A change in behavior (such as a change in diving behavior) that might contribute to tissue damage, gas bubble formation, hypoxia, cardiac arrhythmia, hypertensive hemorrhage or other forms of trauma;

(3) A physiological change such as a vestibular response leading to a behavioral change or stress-induced hemorrhagic diathesis, leading in turn to tissue damage; and

(4) Tissue damage directly from sound exposure, such as through acoustically-mediated bubble formation and growth or acoustic resonance of tissues. Some of these mechanisms are unlikely to apply in the case of impulse sounds. However, there are increasing indications that gas-bubble disease (analogous to the bends), induced in supersaturated tissue by a behavioral response to acoustic exposure, could be a pathologic mechanism for the strandings and mortality of some deep-diving cetaceans exposed to sonar. However, the evidence for this remains circumstantial and associated with exposure to naval mid-frequency sonar, not seismic surveys (Cox *et al.,* 2006; Southall *et al.,* 2007).

Seismic pulses and mid-frequency sonar signals are quite different, and some mechanisms by which sonar sounds have been hypothesized to affect beaked whales are unlikely to apply to airgun pulses. Sounds produced by airgun arrays are broadband impulses with most of the energy below one kHz. Typical military mid-frequency sonar emits non-impulse sounds at frequencies of two to 10 kHz, generally with a relatively narrow bandwidth at any one time. A further difference between seismic surveys and naval exercises is that naval exercises can involve sound sources on more than one vessel. Thus, it is not appropriate to assume that there is a direct connection between the effects of military sonar and seismic surveys on marine mammals. However, evidence that sonar signals can, in special circumstances, lead (at least indirectly) to physical damage and mortality (*e.g.,* Balcomb and Claridge, 2001; NOAA and USN, 2001; Jepson *et al.,* 2003; Fernández *et al.,* 2004, 2005; Hildebrand 2005; Cox *et al.,* 2006) suggests that caution is warranted when dealing with exposure of marine mammals to any high-intensity ''pulsed'' sound.

There is no conclusive evidence of cetacean strandings or deaths at sea as a result of exposure to seismic surveys, but a few cases of strandings in the general area where a seismic survey was ongoing have led to speculation concerning a possible link between seismic surveys and strandings. Suggestions that there was a link between seismic surveys and strandings of humpback whales in Brazil (Engel *et al.,* 2004) were not well founded (IAGC, 2004; IWC, 2007). In September 2002, there was a stranding of two Cuvier's beaked whales in the Gulf of California, Mexico, when the L-DEO vessel R/V *Maurice Ewing* was operating a 20-airgun (8,490 in^3) array in the general area. The link between the stranding

and the seismic surveys was inconclusive and not based on any physical evidence (Hogarth, 2002; Yoder, 2002). Nonetheless, the Gulf of California incident plus the beaked whale strandings near naval exercises involving use of mid-frequency sonar suggests a need for caution in conducting seismic surveys in areas occupied by beaked whales until more is known about effects of seismic surveys on those species (Hildebrand, 2005). No injuries of beaked whales are anticipated during the proposed study because of:

(1) The likelihood that any beaked whales nearby would avoid the approaching vessel before being exposed to high sound levels; and

(2) Differences between the sound sources operated by L-DEO and those involved in the naval exercises associated with strandings.

Non-Auditory Physiological Effects

Non-auditory physiological effects or injuries that theoretically might occur in marine mammals exposed to strong underwater sound include stress, neurological effects, bubble formation, resonance, and other types of organ or tissue damage (Cox *et al.,* 2006; Southall *et al.,* 2007). Studies examining such effects are limited. However, resonance effects (Gentry, 2002) and direct noise-induced bubble formations (Crum *et al.,* 2005) are implausible in the case of exposure to an impulsive broadband source like an airgun array. If seismic surveys disrupt diving patterns of deep-diving species, this might perhaps result in bubble formation and a form of the bends, as speculated to occur in beaked whales exposed to sonar. However, there is no specific evidence of this upon exposure to airgun pulses.

In general, very little is known about the potential for seismic survey sounds (or other types of strong underwater sounds) to cause non-auditory physical effects in marine mammals. Such effects, if they occur at all, would presumably be limited to short distances and to activities that extend over a prolonged period. The available data do not allow identification of a specific exposure level above which non-auditory effects can be expected (Southall *et al.,* 2007), or any meaningful quantitative predictions of the numbers (if any) of marine mammals that might be affected in those ways. Marine mammals that show behavioral avoidance of seismic vessels, including most baleen whales and some odontocetes, are especially unlikely to incur non-auditory physical effects.

Potential Effects of Other Acoustic Devices

Multibeam Echosounder

L-DEO will operate the Kongsberg EM 122 MBES from the source vessel during the planned study. Sounds from the MBES are very short pulses, occurring for 2 to 15 ms once every 5 to 20 s, depending on water depth. Most of the energy in the sound pulses emitted by this MBES is at frequencies near 12 kHz, and the maximum source level is 242 dB re: 1 μPa. The beam is narrow (1 to 2°) in fore-aft extent and wide (150°) in the cross-track extent. Each ping consists of eight (in water greater than 1,000 m deep) or four (less than 1,000 m deep) successive fan-shaped transmissions (segments) at different cross-track angles. Any given mammal at depth near the trackline would be in the main beam for only one or two of the segments. Also, marine mammals that encounter the Kongsberg EM 122 are unlikely to be subjected to repeated pulses because of the narrow fore-aft width of the beam and will receive only limited amounts of pulse energy because of the short pulses. Animals close to the vessel (where the beam is narrowest) are especially unlikely to be ensonified for more than one 2- to 15-ms pulse (or two pulses if in the overlap area). Similarly, Kremser *et al.* (2005) noted that the probability of a cetacean swimming through the area of exposure when an MBES emits a pulse is small. The animal would have to pass the transducer at close range and be swimming at speeds similar to the vessel in order to receive the multiple pulses that might result in sufficient exposure to cause TTS.

Navy sonars that have been linked to avoidance reactions and stranding of cetaceans: (1) Generally have longer pulse duration than the Kongsberg EM 122; and (2) are often directed close to horizontally versus more downward for the MBES. The area of possible influence of the MBES is much smaller—a narrow band below the source vessel. Also, the duration of exposure for a given marine mammal can be much longer for naval sonar. During L-DEO's operations, the individual pulses will be very short, and a given mammal would not receive many of the downward-directed pulses as the vessel passes by. Possible effects of an MBES on marine mammals are outlined in this section.

Masking—Marine mammal communications will not be masked appreciably by the MBES signals given the low duty cycle of the echosounder and the brief period when an individual mammal is likely to be within its beam. Furthermore, in the case of baleen whales, the MBES signals (12 kHz) do not overlap with the predominant frequencies in the calls, which would avoid any significant masking.

Behavioral Responses—Behavioral reactions of free-ranging marine mammals to sonars, echosounders, and other sound sources appear to vary by species and circumstance. Observed reactions have included silencing and dispersal by sperm whales (Watkins *et al.,* 1985), increased vocalizations and no dispersal by pilot whales (*Globicephala melas*) (Rendell and Gordon, 1999), and the previously-mentioned beachings by beaked whales. During exposure to a 21 to 25 kHz ''whale-finding'' sonar with a source level of 215 dB re: 1 μPa, gray whales reacted by orienting slightly away from the source and being deflected from their course by approximately 200 m (Frankel, 2005). When a 38-kHz echosounder and a 150-kHz acoustic Doppler current profiler were transmitting during studies in the eastern Tropical Pacific Ocean, baleen whales showed no significant responses, while spotted and spinner dolphins were detected slightly more often and beaked whales less often during visual surveys (Gerrodette and Pettis, 2005).

Captive bottlenose dolphins and a beluga whale exhibited changes in behavior when exposed to 1-s tonal signals at frequencies similar to those that will be emitted by the MBES used by L-DEO, and to shorter broadband pulsed signals. Behavioral changes typically involved what appeared to be deliberate attempts to avoid the sound exposure (Schlundt *et al.,* 2000; Finneran *et al.,* 2002; Finneran and Schlundt, 2004). The relevance of those data to free-ranging odontocetes is uncertain, and in any case, the test sounds were quite different in duration as compared with those from an MBES.

Hearing Impairment and Other Physical Effects—Given recent stranding events that have been associated with the operation of naval sonar, there is concern that mid-frequency sonar sounds can cause serious impacts to marine mammals (see above this section). However, the MBES proposed for use by L-DEO is quite different than sonar used for navy operations. Pulse duration of the MBES is very short relative to the naval sonar. Also, at any given location, an individual marine mammal would be in the beam of the MBES for much less time given the generally downward orientation of the beam and its narrow fore-aft beamwidth; navy sonar often uses near-horizontally-directed sound. Those factors would all reduce the sound energy received from

the MBES rather drastically relative to that from naval sonar.

Based upon the best available science, NMFS believes that the brief exposure of marine mammals to one pulse, or small numbers of signals, from the MBES is not likely to result in the harassment of marine mammals.

Sub-Bottom Profiler

L-DEO will also operate an SBP from the source vessel during the proposed survey. Sounds from the SBP are very short pulses, occurring for one to four ms once every second. Most of the energy in the sound pulses emitted by the SBP is at 3.5 kHz, and the beam is directed downward. The sub-bottom profiler on the *Langseth* has a maximum source level of 222 dB re: 1 μPa.

Kremser *et al.* (2005) noted that the probability of a cetacean swimming through the area of exposure when a bottom profiler emits a pulse is small—even for an SBP more powerful than that on the *Langseth*—if the animal was in the area, it would have to pass the transducer at close range in order to be subjected to sound levels that could cause TTS.

Masking—Marine mammal communications will not be masked appreciably by the SBP signals given the directionality of the signal and the brief period when an individual mammal is likely to be within its beam. Furthermore, in the case of most baleen whales, the SBP signals do not overlap with the predominant frequencies in the calls, which would avoid significant masking.

Behavioral Responses—Marine mammal behavioral reactions to other pulsed sound sources are discussed above, and responses to the SBP are likely to be similar to those for other pulsed sources if received at the same levels. However, the pulsed signals from the SBP are considerably weaker than those from the MBES. Therefore, behavioral responses are not expected unless marine mammals are very close to the source.

Hearing Impairment and Other Physical Effects—It is unlikely that the SBP produces pulse levels strong enough to cause hearing impairment or other physical injuries even in an animal that is (briefly) in a position near the source. The SBP is usually operated simultaneously with other higher-power acoustic sources. Many marine mammals will move away in response to the approaching higher-power sources or the vessel itself before the mammals would be close enough for there to be any possibility of effects from the less intense sounds from the SBP. Based upon the best available science, NMFS believes that the brief exposure of marine mammals to signals from the SBP is not likely to result in the harassment of marine mammals.

Potential Effects of Vessel Movement and Collisions

Vessel movement in the vicinity of marine mammals has the potential to result in either a behavioral response or a direct physical interaction. Both scenarios are discussed below this section.

Behavioral Responses to Vessel Movement

There are limited data concerning marine mammal behavioral responses to vessel traffic and vessel noise, and a lack of consensus among scientists with respect to what these responses mean or whether they result in short-term or long-term adverse effects. In those cases where there is a busy shipping lane or where there is a large amount of vessel traffic, marine mammals may experience acoustic masking (Hildebrand, 2005) if they are present in the area (*e.g.,* killer whales in Puget Sound; Foote *et al.,* 2004; Holt *et al.,* 2008). In cases where vessels actively approach marine mammals (*e.g.,* whale watching or dolphin watching boats), scientists have documented that animals exhibit altered behavior such as increased swimming speed, erratic movement, and active avoidance behavior (Bursk, 1983; Acevedo, 1991; Baker and MacGibbon, 1991; Trites and Bain, 2000; Williams *et al.,* 2002; Constantine *et al.,* 2003), reduced blow interval (Ritcher *et al.,* 2003), disruption of normal social behaviors (Lusseau, 2003; 2006), and the shift of behavioral activities which may increase energetic costs (Constantine *et al.,* 2003; 2004)). A detailed review of marine mammal reactions to ships and boats is available in Richardson *et al.* (1995). For each of the marine mammal taxonomy groups, Richardson *et al.* (1995) provides the following assessment regarding reactions to vessel traffic:

Toothed whales: ''In summary, toothed whales sometimes show no avoidance reaction to vessels, or even approach them. However, avoidance can occur, especially in response to vessels of types used to chase or hunt the animals. This may cause temporary displacement, but we know of no clear evidence that toothed whales have abandoned significant parts of their range because of vessel traffic.''

Baleen whales: ''When baleen whales receive low-level sounds from distant or stationary vessels, the sounds often seem to be ignored. Some whales approach the sources of these sounds. When vessels approach whales slowly and non-aggressively, whales often exhibit slow and inconspicuous avoidance maneuvers. In response to strong or rapidly changing vessel noise, baleen whales often interrupt their normal behavior and swim rapidly away. Avoidance is especially strong when a boat heads directly toward the whale.''

Behavioral responses to stimuli are complex and influenced to varying degrees by a number of factors, such as species, behavioral contexts, geographical regions, source characteristics (moving or stationary, speed, direction, etc.), prior experience of the animal and physical status of the animal. For example, studies have shown that beluga whales' reactions varied when exposed to vessel noise and traffic. In some cases, naive beluga whales exhibited rapid swimming from ice-breaking vessels up to 80 km (49.7 mi) away, and showed changes in surfacing, breathing, diving, and group composition in the Canadian high Arctic where vessel traffic is rare (Finley *et al.,* 1990). In other cases, beluga whales were more tolerant of vessels, but responded differentially to certain vessels and operating characteristics by reducing their calling rates (especially older animals) in the St. Lawrence River where vessel traffic is common (Blane and Jaakson, 1994). In Bristol Bay, Alaska, beluga whales continued to feed when surrounded by fishing vessels and resisted dispersal even when purposefully harassed (Fish and Vania, 1971).

In reviewing more than 25 years of whale observation data, Watkins (1986) concluded that whale reactions to vessel traffic were ''modified by their previous experience and current activity: Habituation often occurred rapidly, attention to other stimuli or preoccupation with other activities sometimes overcame their interest or wariness of stimuli.'' Watkins noticed that over the years of exposure to ships in the Cape Cod area, minke whales changed from frequent positive interest (*e.g.,* approaching vessels) to generally uninterested reactions; fin whales changed from mostly negative (*e.g.,* avoidance) to uninterested reactions; right whales apparently continued the same variety of responses (negative, uninterested, and positive responses) with little change; and humpbacks dramatically changed from mixed responses that were often negative to reactions that were often strongly positive. Watkins (1986) summarized that ''whales near shore, even in regions with low vessel traffic, generally have become less wary of boats and their

noises, and they have appeared to be less easily disturbed than previously. In particular locations with intense shipping and repeated approaches by boats (such as the whale-watching areas of Stellwagen Bank), more and more whales had positive reactions to familiar vessels, and they also occasionally approached other boats and yachts in the same ways.''

Although the radiated sound from the *Langseth* will be audible to marine mammals over a large distance, it is unlikely that animals will respond behaviorally (in a manner that NMFS would consider MMPA harassment) to low-level distant shipping noise as the animals in the area are likely to be habituated to such noises (Nowacek *et al.,* 2004). In light of these facts, NMFS does not expect the *Langseth's* movements to result in Level B harassment.

Vessel Strike

Ship strikes of cetaceans can cause major wounds, which may lead to the death of the animal. An animal at the surface could be struck directly by a vessel, a surfacing animal could hit the bottom of a vessel, or an animal just below the surface could be cut by a vessel's propeller. The severity of injuries typically depends on the size and speed of the vessel (Knowlton and Kraus, 2001; Laist *et al.,* 2001; Vanderlaan and Taggart, 2007).

The most vulnerable marine mammals are those that spend extended periods of time at the surface in order to restore oxygen levels within their tissues after deep dives (*e.g.,* the sperm whale). In addition, some baleen whales, such as the North Atlantic right whale, seem generally unresponsive to vessel sound, making them more susceptible to vessel collisions (Nowacek *et al.,* 2004). These species are primarily large, slow moving whales. Smaller marine mammals (*e.g.,* bottlenose dolphin) move quickly through the water column and are often seen riding the bow wave of large ships. Marine mammal responses to vessels may include avoidance and changes in dive pattern (NRC, 2003).

An examination of all known ship strikes from all shipping sources (civilian and military) indicates vessel speed is a principal factor in whether a vessel strike results in death (Knowlton and Kraus, 2001; Laist *et al.,* 2001; Jensen and Silber, 2003; Vanderlaan and Taggart, 2007). In assessing records in which vessel speed was known, Laist *et al.* (2001) found a direct relationship between the occurrence of a whale strike and the speed of the vessel involved in the collision. The authors concluded that most deaths occurred when a vessel was traveling in excess of 14.9 mph (24.1 km/hr;13 kts).

L-DEO's proposed operation of one vessel for the proposed survey is relatively small in scale compared to the number of commercial ships transiting at higher speeds in the same areas on an annual basis. The probability of vessel and marine mammal interactions occurring during the proposed survey is unlikely due to the *Langseth's* slow operational speed, which is typically 4.6 kts (8.5 km/h; 5.3 mph). Outside of operations, the *Langseth's* cruising speed would be approximately 11.5 mph (18.5 km/h; 10 kts) which is generally below the speed at which studies have noted reported increases of marine mammal injury or death (Laist *et al.,* 2001).

As a final point, the *Langseth* has a number of other advantages for avoiding ship strikes as compared to most commercial merchant vessels, including the following: The *Langseth's* bridge offers good visibility to visually monitor for marine mammal presence; PSVOs posted during operations scan the ocean for marine mammals and must report visual alerts of marine mammal presence to crew; and the PSVOs receive extensive training that covers the fundamentals of visual observing for marine mammals and information about marine mammals and their identification at sea.

Coring Activities

None of the coring devices have an acoustic component. There would be no drilling or hammering associated with the coring devices as the coring devices would use gravity to penetrate the sediment. The *Langseth* crew would lower the coring devices slowly from the ship on a wire; the wire would be kept taught as a result of the weight of the corer equipment and gravity. Due to the anticipated taughtness of the wire, NMFS does not anticipate entanglement with the gear as it is deployed or retrieved from the vessel. Marine mammals would avoid the gear and avoid any potential strikes from the equipment.

The potential effects to marine mammals described in this section of the document do not take into consideration the proposed monitoring and mitigation measures described later in this document (see the ''Proposed Mitigation'' and ''Proposed Monitoring and Reporting'' sections) which, as noted are designed to effect the least practicable adverse impact on affected marine mammal species and stocks.

Anticipated Effects on Marine Mammal Habitat

The proposed seismic survey is not anticipated to have any permanent impact on habitats used by the marine mammals in the proposed survey area, including the food sources they use (*i.e.,* fish and invertebrates). Additionally, no physical damage to any habitat is anticipated as a result of conducting the proposed seismic survey. While it is anticipated that the specified activity may result in marine mammals avoiding certain areas due to temporary ensonification, this impact to habitat is temporary and reversible and was considered in further detail earlier in this document, as behavioral modification.

The main impact associated with the proposed activity will be temporarily elevated noise levels and the associated direct effects on marine mammals, previously discussed in this notice. The next section discusses the potential impacts of anthropogenic sound sources on common marine mammal prey in the proposed survey area (*i.e.,* fish and invertebrates).

Anticipated Effects on Fish

One reason for the adoption of airguns as the standard energy source for marine seismic surveys is that, unlike explosives, they have not been associated with large-scale fish kills. However, existing information on the impacts of seismic surveys on marine fish populations is limited (see Appendix D of NSF's EA). There are three types of potential effects of exposure to seismic surveys: (1) Pathological, (2) physiological, and (3) behavioral. Pathological effects involve lethal and temporary or permanent sub-lethal injury. Physiological effects involve temporary and permanent primary and secondary stress responses, such as changes in levels of enzymes and proteins. Behavioral effects refer to temporary and (if they occur) permanent changes in exhibited behavior (*e.g.,* startle and avoidance behavior). The three categories are interrelated in complex ways. For example, it is possible that certain physiological and behavioral changes could potentially lead to an ultimate pathological effect on individuals (*i.e.,* mortality).

The specific received sound levels at which permanent adverse effects to fish potentially could occur are little studied and largely unknown. Furthermore, the available information on the impacts of seismic surveys on marine fish is from studies of individuals or portions of a population; there have been no studies at the population scale. The studies of

individual fish have often been on caged fish that were exposed to airgun pulses in situations not representative of an actual seismic survey. Thus, available information provides limited insight on possible real-world effects at the ocean or population scale.

Hastings and Popper (2005), Popper (2009), and Popper and Hastings (2009a,b) provided recent critical reviews of the known effects of sound on fish. The following sections provide a general synopsis of the available information on the effects of exposure to seismic and other anthropogenic sound as relevant to fish. The information comprises results from scientific studies of varying degrees of rigor plus some anecdotal information. Some of the data sources may have serious shortcomings in methods, analysis, interpretation, and reproducibility that must be considered when interpreting their results (see Hastings and Popper, 2005). Potential adverse effects of the program's sound sources on marine fish are then noted.

Pathological Effects—The potential for pathological damage to hearing structures in fish depends on the energy level of the received sound and the physiology and hearing capability of the species in question (see Appendix D of NSF's EA). For a given sound to result in hearing loss, the sound must exceed, by some substantial amount, the hearing threshold of the fish for that sound (Popper, 2005). The consequences of temporary or permanent hearing loss in individual fish on a fish population are unknown; however, they likely depend on the number of individuals affected and whether critical behaviors involving sound (*e.g.,* predator avoidance, prey capture, orientation and navigation, reproduction, *etc.*) are adversely affected.

Little is known about the mechanisms and characteristics of damage to fish that may be inflicted by exposure to seismic survey sounds. Few data have been presented in the peer-reviewed scientific literature. As far as we know, there are only two papers with proper experimental methods, controls, and careful pathological investigation implicating sounds produced by actual seismic survey airguns in causing adverse anatomical effects. One such study indicated anatomical damage, and the second indicated TTS in fish hearing. The anatomical case is McCauley *et al.* (2003), who found that exposure to airgun sound caused observable anatomical damage to the auditory maculae of pink snapper (*Pagrus auratus*). This damage in the ears had not been repaired in fish sacrificed and examined almost two months after exposure. On the other hand, Popper *et al.* (2005) documented only TTS (as determined by auditory brainstem response) in two of three fish species from the Mackenzie River Delta. This study found that broad whitefish (*Coregonus nasus*) exposed to five airgun shots were not significantly different from those of controls. During both studies, the repetitive exposure to sound was greater than would have occurred during a typical seismic survey. However, the substantial low-frequency energy produced by the airguns (less than 400 Hz in the study by McCauley *et al.* [2003] and less than approximately 200 Hz in Popper *et al.* [2005]) likely did not propagate to the fish because the water in the study areas was very shallow (approximately 9 m in the former case and less than two m in the latter). Water depth sets a lower limit on the lowest sound frequency that will propagate (the ''cutoff frequency'') at about one-quarter wavelength (Urick, 1983; Rogers and Cox, 1988).

Wardle *et al.* (2001) suggested that in water, acute injury and death of organisms exposed to seismic energy depends primarily on two features of the sound source: (1) The received peak pressure, and (2) the time required for the pressure to rise and decay. Generally, as received pressure increases, the period for the pressure to rise and decay decreases, and the chance of acute pathological effects increases. According to Buchanan *et al.* (2004), for the types of seismic airguns and arrays involved with the proposed program, the pathological (mortality) zone for fish would be expected to be within a few meters of the seismic source. Numerous other studies provide examples of no fish mortality upon exposure to seismic sources (Falk and Lawrence, 1973; Holliday *et al.,* 1987; La Bella *et al.,* 1996; Santulli *et al.,* 1999; McCauley *et al.,* 2000a,b, 2003; Bjarti, 2002; Thomsen, 2002; Hassel *et al.,* 2003; Popper *et al.,* 2005; Boeger *et al.,* 2006).

Some studies have reported, some equivocally, that mortality of fish, fish eggs, or larvae can occur close to seismic sources (Kostyuchenko, 1973; Dalen and Knutsen, 1986; Booman *et al.,* 1996; Dalen *et al.,* 1996). Some of the reports claimed seismic effects from treatments quite different from actual seismic survey sounds or even reasonable surrogates. However, Payne *et al.* (2009) reported no statistical differences in mortality/morbidity between control and exposed groups of capelin eggs or monkfish larvae. Saetre and Ona (1996) applied a 'worst-case scenario' mathematical model to investigate the effects of seismic energy on fish eggs and larvae. They concluded that mortality rates caused by exposure to seismic surveys are so low, as compared to natural mortality rates, that the impact of seismic surveying on recruitment to a fish stock must be regarded as insignificant.

Physiological Effects—Physiological effects refer to cellular and/or biochemical responses of fish to acoustic stress. Such stress potentially could affect fish populations by increasing mortality or reducing reproductive success. Primary and secondary stress responses of fish after exposure to seismic survey sound appear to be temporary in all studies done to date (Sverdrup *et al.,* 1994; Santulli *et al.,* 1999; McCauley *et al.,* 2000a,b). The periods necessary for the biochemical changes to return to normal are variable and depend on numerous aspects of the biology of the species and of the sound stimulus (see Appendix C of NSF's EA).

Behavioral Effects—Behavioral effects include changes in the distribution, migration, mating, and catchability of fish populations. Studies investigating the possible effects of sound (including seismic survey sound) on fish behavior have been conducted on both uncaged and caged individuals (*e.g.,* Chapman and Hawkins, 1969; Pearson *et al.,* 1992; Santulli *et al.,* 1999; Wardle *et al.,* 2001; Hassel *et al.,* 2003). Typically, in these studies fish exhibited a sharp startle response at the onset of a sound followed by habituation and a return to normal behavior after the sound ceased.

In general, any adverse effects on fish behavior or fisheries attributable to seismic testing may depend on the species in question and the nature of the fishery (season, duration, fishing method). They may also depend on the age of the fish, its motivational state, its size, and numerous other factors that are difficult, if not impossible, to quantify at this point, given such limited data on effects of airguns on fish, particularly under realistic at-sea conditions.

Anticipated Effects on Invertebrates

The existing body of information on the impacts of seismic survey sound on marine invertebrates is very limited. However, there is some unpublished and very limited evidence of the potential for adverse effects on invertebrates, thereby justifying further discussion and analysis of this issue. The three types of potential effects of exposure to seismic surveys on marine invertebrates are pathological, physiological, and behavioral. Based on the physical structure of their sensory organs, marine invertebrates appear to be specialized to respond to particle displacement components of an

impinging sound field and not to the pressure component (Popper *et al.,* 2001; see also Appendix E of NSF's EA).

The only information available on the impacts of seismic surveys on marine invertebrates involves studies of individuals; there have been no studies at the population scale. Thus, available information provides limited insight on possible real-world effects at the regional or ocean scale. The most important aspect of potential impacts concerns how exposure to seismic survey sound ultimately affects invertebrate populations and their viability, including availability to fisheries.

Literature reviews of the effects of seismic and other underwater sound on invertebrates were provided by Moriyasu *et al.* (2004) and Payne *et al.* (2008). The following sections provide a synopsis of available information on the effects of exposure to seismic survey sound on species of decapod crustaceans and cephalopods, the two taxonomic groups of invertebrates on which most such studies have been conducted. The available information is from studies with variable degrees of scientific soundness and from anecdotal information. Appendix D of L-DEO's EA provides a more detailed review of the literature on the effects of seismic survey sound on invertebrates.

Pathological Effects—In water, lethal and sub-lethal injury to organisms exposed to seismic survey sound appears to depend on at least two features of the sound source: (1) The received peak pressure; and (2) the time required for the pressure to rise and decay. Generally, as received pressure increases, the period for the pressure to rise and decay decreases, and the chance of acute pathological effects increases. For the type of airgun array planned for the proposed program, the pathological (mortality) zone for crustaceans and cephalopods is expected to be within a few meters of the seismic source, at most; however, very few specific data are available on levels of seismic signals that might damage these animals. This premise is based on the peak pressure and rise/decay time characteristics of seismic airgun arrays currently in use around the world.

Some studies have suggested that seismic survey sound has a limited pathological impact on early developmental stages of crustaceans (Pearson *et al.,* 1994; Christian *et al.,* 2003; DFO, 2004). However, the impacts appear to be either temporary or insignificant compared to what occurs under natural conditions. Controlled field experiments on adult crustaceans (Christian *et al.,* 2003, 2004; DFO, 2004) and adult cephalopods (McCauley *et al.,* 2000a,b) exposed to seismic survey sound have not resulted in any significant pathological impacts on the animals. It has been suggested that exposure to commercial seismic survey activities has injured giant squid (Guerra *et al.,* 2004), but the article provides little evidence to support this claim.

Andre *et al.* (2011) exposed four cephalopod species (*Loligo vulgaris, Sepia officinalis, Octopus vulgaris,* and *Ilex coindetii*) to two hours of continuous sound from 50 to 400 Hz at 157 ± 5 dB re: 1 μPa. They reported lesions to the sensory hair cells of the statocysts of the exposed animals that increased in severity with time, suggesting that cephalopods are particularly sensitive to low-frequency sound.

The received SPL was reported as 157 ± 5 dB re: 1 FPa, with peak levels at 175 dB re 1 FPa. As in the McCauley *et al.* (2003) paper on sensory hair cell damage in pink snapper as a result of exposure to seismic sound, the cephalopods were subjected to higher sound levels than they would be under natural conditions, and they were unable to swim away from the sound source.

Physiological Effects—Physiological effects refer mainly to biochemical responses by marine invertebrates to acoustic stress. Such stress potentially could affect invertebrate populations by increasing mortality or reducing reproductive success. Primary and secondary stress responses (*i.e.,* changes in haemolymph levels of enzymes, proteins, *etc.*) of crustaceans have been noted several days or months after exposure to seismic survey sounds (Payne *et al.,* 2007). The periods necessary for these biochemical changes to return to normal are variable and depend on numerous aspects of the biology of the species and of the sound stimulus.

Behavioral Effects—There is increasing interest in assessing the possible direct and indirect effects of seismic and other sounds on invertebrate behavior, particularly in relation to the consequences for fisheries. Changes in behavior could potentially affect such aspects as reproductive success, distribution, susceptibility to predation, and catchability by fisheries. Studies investigating the possible behavioral effects of exposure to seismic survey sound on crustaceans and cephalopods have been conducted on both uncaged and caged animals. In some cases, invertebrates exhibited startle responses (*e.g.,* squid in McCauley *et al.,* 2000a,b). In other cases, no behavioral impacts were noted (*e.g.,* crustaceans in Christian *et al.,* 2003, 2004; DFO, 2004). There have been anecdotal reports of reduced catch rates of shrimp shortly after exposure to seismic surveys; however, other studies have not observed any significant changes in shrimp catch rate (Andriguetto-Filho *et al.,* 2005). Similarly, Parry and Gason (2006) did not find any evidence that lobster catch rates were affected by seismic surveys. Any adverse effects on crustacean and cephalopod behavior or fisheries attributable to seismic survey sound depend on the species in question and the nature of the fishery (season, duration, fishing method).

Proposed Mitigation

In order to issue an Incidental Take Authorization (ITA) under section 101(a)(5)(D) of the MMPA, NMFS must set forth the permissible methods of taking pursuant to such activity, and other means of effecting the least practicable adverse impact on such species or stock and its habitat, paying particular attention to rookeries, mating grounds, and areas of similar significance, and the availability of such species or stock for taking for certain subsistence uses.

L-DEO has based the mitigation measures described herein, to be implemented for the proposed seismic survey, on the following:

(1) Protocols used during previous L-DEO seismic research cruises as approved by NMFS;

(2) Previous IHA applications and IHAs approved and authorized by NMFS; and

(3) Recommended best practices in Richardson *et al.* (1995), Pierson *et al.* (1998), and Weir and Dolman, (2007).

To reduce the potential for disturbance from acoustic stimuli associated with the activities, L-DEO and/or its designees would to implement the following mitigation measures for marine mammals:

(1) Proposed EZs;

(2) Speed or course alteration;

(3) Shut-down procedures; and

(4) Ramp-up procedures.

Proposed Exclusion Zones—L-DEO uses safety radii to designate EZs and to estimate take for marine mammals. Table 1 (presented earlier in this document) shows the distances at which three sound levels (160-, 180-, and 190-dB) are expected to be received from the two GI airguns. The 180 and 190 dB radii are shut-down criteria applicable to cetaceans and pinnipeds, respectively, as specified by NMFS (2000); these levels were used to

establish the EZs. If the PSO detects marine mammal(s) within or about to enter the appropriate EZ, L-DEO would shut down the airguns immediately.

Speed or Course Alteration—If L-DEO detects a marine mammal outside the EZ and, based on its position and the relative motion, the marine mammal is likely to enter the EZ, L-DEO could change the vessel's speed and/or direct course. L-DEO would implement speed or course operation if operationally practicable, thus minimizing the effect on the planned science objectives. L-DEO would monitor the activities and movements of the marine mammal (relative to the seismic vessel) to determine if the animal is approaching the applicable EZ. If the animal appears likely to enter the EZ, L-DEO would implement further mitigative actions, *i.e.,* either further course alterations or a shut-down of the seismic source. Typically, during seismic operations, the source vessel is unable to change speed or course and one or more alternative mitigation measures will need to be implemented.

Shut-down Procedures—L-DEO will shut down the operating airgun(s) if a marine mammal is seen outside the EZ for the airgun(s), and if the vessel's speed and/or course cannot be changed to avoid having the animal enter the EZ, the seismic source will be shut-down before the animal is within the EZ. If a marine mammal is already within the EZ when first detected, the seismic source will be shut-down immediately.

Following a shut-down, L-DEO will not resume airgun activity until the marine mammal has cleared the EZ. SIO will consider the animal to have cleared the EZ if:

- A PSO has visually observed the animal leave the EZ, or
- A PSO has not sighted the animal within the EZ for 15 min for species with shorter dive durations (*i.e.,* small odontocetes or pinnipeds), or 30 min for species with longer dive durations (*i.e.,* mysticetes and large odontocetes, including sperm, killer, and beaked whales).

Ramp-up Procedures—L-DEO will follow a ramp-up procedure when the airgun array begins operating after a specified period without airgun operations or when a shut-down has exceeded that period. L-DEO proposes that, for the present cruise, this period would be approximately 15 min. L-DEO has used similar periods (approximately 15 min) during previous L-DEO surveys.

L-DEO will begin a ramp-up with a single GI airgun (105 in^3) and will add the second GI airgun (105 in^3) after five min. During ramp-up, the PSOs will monitor the EZ, and if marine mammals are sighted, L-DEO will implement a shut-down as though both GI airguns were operational.

If the complete EZ has not been visible for at least 30 min prior to the start of operations in either daylight or nighttime, L-DEO will not commence the ramp-up. If one airgun has operated, ramp-up to full power will be permissible at night or in poor visibility, on the assumption that marine mammals will be alerted to the approaching seismic vessel by the sounds from the single airgun and could move away if they choose. A ramp-up from a shut-down may occur at night, but only where the EZ is small enough to be visible. SIO will not initiate a ramp-up of the airguns if a marine mammal is sighted within or near the applicable EZs during the day or close to the vessel at night.

NMFS has carefully evaluated the applicant's proposed mitigation measures and has considered a range of other measures in the context of ensuring that NMFS prescribes the means of effecting the least practicable adverse impact on the affected marine mammal species and stocks and their habitat. NMFS's evaluation of potential measures included consideration of the following factors in relation to one another:

(1) The manner in which, and the degree to which, the successful implementation of the measure is expected to minimize adverse impacts to marine mammals;

(2) The proven or likely efficacy of the specific measure to minimize adverse impacts as planned; and

(3) The practicability of the measure for applicant implementation.

Based on NMFS's evaluation of the applicant's proposed measures, as well as other measures considered by NMFS or recommended by the public for previous low-energy seismic surveys, NMFS has preliminarily determined that the proposed mitigation measures provide the means of effecting the least practicable adverse impacts on marine mammal species or stocks and their habitat, paying particular attention to rookeries, mating grounds, and areas of similar significance.

Proposed Monitoring and Reporting

In order to issue an ITA for an activity, section 101(a)(5)(D) of the MMPA states that NMFS must set forth ''requirements pertaining to the monitoring and reporting of such taking.'' The MMPA implementing regulations at 50 CFR 216.104(a)(13) indicate that requests for IHAs must include the suggested means of accomplishing the necessary monitoring and reporting that will result in increased knowledge of the species and of the level of taking or impacts on populations of marine mammals that are expected to be present in the action area.

Proposed Monitoring

L-DEO proposes to sponsor marine mammal monitoring during the proposed project, in order to implement the proposed mitigation measures that require real-time monitoring, and to satisfy the anticipated monitoring requirements of the IHA. L-DEO's proposed Monitoring Plan is described below this section. L-DEO understands that this monitoring plan will be subject to review by NMFS, and that refinements may be required. The monitoring work described here has been planned as a self-contained project independent of any other related monitoring projects that may be occurring simultaneously in the same regions. L-DEO is prepared to discuss coordination of its monitoring program with any related work that might be done by other groups insofar as this is practical and desirable.

Vessel-Based Visual Monitoring

L-DEO will position PSOs aboard the seismic source vessel to watch for marine mammals near the vessel during daytime airgun operations and during any ramp-ups at night. PSOs will also watch for marine mammals near the seismic vessel for at least 30 min prior to the ramp-up of airgun operations after an extended shut-down (*i.e.,* greater than approximately 15 min for this proposed cruise). When feasible, PSOs will conduct observations during daytime periods when the seismic system is not operating for comparison of sighting rates and behavior with and without airgun operations and between acquisition periods. Based on PSO observations, the airguns will be shut-down when marine mammals are observed within or about to enter a designated EZ. The EZ is a region in which a possibility exists of adverse effects on animal hearing or other physical effects.

During seismic operations in the central Pacific Ocean, at least three PSOs will be based aboard the *Langseth.* L-DEO will appoint the PSOs with NMFS' concurrence. At least one PSO will monitor the EZs during seismic operations. Observations will take place during ongoing daytime operations and nighttime ramp-ups of the airguns. PSO(s) will be on duty in shifts of duration no longer than four hours. The vessel crew will also be instructed to assist in detecting marine mammals.

The *Langseth* is a suitable platform for marine mammal observations. When stationed on the observation platform, the eye level will be approximately 21.5 m (70.5 ft) above sea level, and the observer will have a good view around the entire vessel. During daytime, the PSVOs will scan the area around the vessel systematically with reticle binoculars (*e.g.,* 7 × 50 Fujinon), Big-eye binoculars (25 × 150), and with the naked eye. During darkness, night vision devices (NVDs) will be available (ITT F500 Series Generation 3 binocular-image intensifier or equivalent), when required. Laser range-finding binoculars (Leica LRF 1200 laser rangefinder or equivalent) will be available to assist with distance estimation. Those are useful in training observers to estimate distances visually, but are generally not useful in measuring distances to animals directly; that is done primarily with the reticles in the binoculars.

When the PSOs observe marine mammals within or about to enter the designated EZ, the *Langseth* will immediately shut-down the airguns if necessary. The PSOs will continue to maintain watch to determine when the animal(s) are outside the EZ by visual confirmation. Airgun operations will not resume until the animal is confirmed to have left the EZ, or if not observed after 15 min for species with shorter dive durations (small odontocetes and pinnipeds) or 30 min for species with longer dive durations (mysticetes and large odontocetes, including sperm, killer, and beaked whales).

PSO Data and Documentation

PSOs will record data to estimate the numbers of marine mammals exposed to various received sound levels and to document apparent disturbance reactions or lack thereof. Data will be used to estimate numbers of animals potentially 'taken' by harassment (as defined in the MMPA). They will also provide information needed to order a shut-down of the airguns when a marine mammal is within or near the EZ. Observations will also be made during daytime periods when the *Langseth* is underway without seismic operations (*i.e.,* transits to, from, and through the study area) to collect baseline biological data.

When a sighting is made, the following information about the sighting will be recorded:

1. Species, group size, age/size/sex categories (if determinable), behavior when first sighted and after initial sighting, heading (if consistent), bearing and distance from seismic vessel, sighting cue, apparent reaction to the airguns or vessel (*e.g.,* none, avoidance, approach, paralleling, etc.), and behavioral pace.

2. Time, location, heading, speed, activity of the vessel, Beaufort sea state, visibility, and sun glare.

The data listed under (2) will also be recorded at the start and end of each observation watch, and during a watch whenever there is a change in one or more of the variables.

All observations as well as information regarding shut-downs of the seismic source, will be recorded in a standardized format. The data accuracy will be verified by the PSOs at sea, and preliminary reports will be prepared during the field program and summaries forwarded to the operating institution's shore facility and to NSF weekly or more frequently.

Vessel-based observations by the PSO will provide the following information:

1. The basis for real-time mitigation (airgun shut-down).

2. Information needed to estimate the number of marine mammals potentially taken by harassment, which must be reported to NMFS.

3. Data on the occurrence, distribution, and activities of marine mammals in the area where the seismic study is conducted.

4. Information to compare the distance and distribution of marine mammals relative to the source vessel at times with and without seismic activity.

5. Data on the behavior and movement patterns of marine mammals seen at times with and without seismic activity.

L-DEO will submit a report to NMFS and NSF within 90 days after the end of the cruise. The report will describe the operations that were conducted and sightings of marine mammals near the operations. The report will provide full documentation of methods, results, and interpretation pertaining to all monitoring. The 90-day report will summarize the dates and locations of seismic operations, and all marine mammal sightings (dates, times, locations, activities, associated seismic survey activities). The report will also include estimates of the number and nature of exposures that could result in potential ''takes'' of marine mammals by harassment or in other ways. After the report is considered final, it will be publicly available on the NMFS and NSF Web sites.

In the unanticipated event that the specified activity clearly causes the take of a marine mammal in a manner prohibited by the IHA (if issued), such as an injury (Level A harassment), serious injury or mortality (*e.g.,* ship-strike, gear interaction, and/or entanglement), L-DEO shall immediately cease the specified activities and immediately report the incident to the Chief of the Permits and Conservation Division, Office of Protected Resources, NMFS, at 301–427–8401 and/or by email to *Jolie.Harrison@noaa.gov* and *ITP.Cody@noaa.gov* and the Pacific Islands Regional Stranding Coordinator at 808–944–2269 (*David.Schofield@noaa.gov*). The report must include the following information:

- Time, date, and location (latitude/longitude) of the incident;
- Name and type of vessel involved;
- Vessel's speed during and leading up to the incident;
- Description of the incident;
- Status of all sound source use in the 24 hours preceding the incident;
- Water depth;
- Environmental conditions (*e.g.,* wind speed and direction, Beaufort sea state, cloud cover, and visibility);
- Description of all marine mammal observations in the 24 hours preceding the incident;
- Species identification or description of the animal(s) involved;
- Fate of the animal(s); and
- Photographs or video footage of the animal(s) (if equipment is available).

Activities will not resume until NMFS is able to review the circumstances of the prohibited take. NMFS will work with L-DEO to determine what is necessary to minimize the likelihood of further prohibited take and ensure MMPA compliance. L-DEO may not resume their activities until notified by NMFS via letter, email, or telephone.

In the event that L-DEO discovers an injured or dead marine mammal, and the lead PSVO determines that the cause of the injury or death is unknown and the death is relatively recent (*i.e.,* in less than a moderate state of decomposition as described in the next paragraph), L-DEO will immediately report the incident to the Chief of the Permits and Conservation Division, Office of Protected Resources, NMFS, at 301–427–8401 and/or by email to *Jolie.Harrison@noaa.gov* and *ITP.Cody@noaa.gov* and the Pacific Islands Regional Stranding Coordinator at 808–944–2269 (*David.Schofield@noaa.gov*). The report must include the same information identified in the paragraph above. Activities may continue while NMFS reviews the circumstances of the incident. NMFS will work with L-DEO to determine whether modifications in the activities are appropriate.

In the event that L-DEO discovers an injured or dead marine mammal, and

the lead PSVO determines that the injury or death is not associated with or related to the activities authorized in the IHA (*e.g.,* previously wounded animal, carcass with moderate to advanced decomposition, or scavenger damage), L-DEO will report the incident to the Chief of the Permits and Conservation Division, Office of Protected Resources, NMFS, at 301–427–8401 and/or by email to *Jolie.Harrison@noaa.gov* and *ITP.Cody@noaa.gov* and the Pacific Islands Regional Stranding Coordinator at 808–944–2269 (*David.Schofield@noaa.gov*), within 24 hours of the discovery. L-DEO will provide photographs or video footage (if available) or other documentation of the stranded animal sighting to NMFS. Activities may continue while NMFS reviews the circumstances of the incident.

Estimated Take by Incidental Harassment

Except with respect to certain activities not pertinent here, the MMPA defines ''harassment'' as:

> any act of pursuit, torment, or annoyance which (i) has the potential to injure a marine mammal or marine mammal stock in the wild [Level A harassment]; or (ii) has the potential to disturb a marine mammal or marine mammal stock in the wild by causing disruption of behavioral patterns, including, but not limited to, migration, breathing, nursing, breeding, feeding, or sheltering [Level B harassment].

Only take by Level B harassment is anticipated and proposed to be authorized as a result of the proposed marine seismic survey in the central Pacific Ocean. Acoustic stimuli (*i.e.,* increased underwater sound) generated during the operation of the seismic airgun array may have the potential to cause marine mammals in the survey area to be exposed to sounds at or greater than 160 dB or cause temporary, short-term changes in behavior. There is no evidence that the planned activities could result in injury, serious injury, or mortality within the specified geographic area for which L-DEO seeks the IHA. The required mitigation and monitoring measures will minimize any potential risk for injury, serious injury, or mortality.

The following sections describe L-DEO's methods to estimate take by incidental harassment and present the applicant's estimates of the numbers of marine mammals that could be affected during the proposed seismic program. The estimates are based on a consideration of the number of marine mammals that could be disturbed appreciably by operations with the two GI airgun array to be used during approximately 2,316 km^2 (894 mi^2) (includes primary and secondary lines and an additional 25 percent contingency) of survey lines in the central Pacific Ocean.

L-DEO assumes that, during simultaneous operations of the airgun array and the other sources, any marine mammals close enough to be affected by the MBES, SBP, and ADCP would already be affected by the airguns. However, whether or not the airguns are operating simultaneously with the other sources, marine mammals are expected to exhibit no more than short-term and inconsequential responses to the MBES, SBP, and ADCP given their characteristics (*e.g.,* narrow, downward-directed beam) and other considerations described previously. Such reactions are not considered to constitute ''taking'' (NMFS, 2001). Therefore, L-DEO provides no additional allowance for animals that could be affected by sound sources other than airguns.

Density data on the marine mammal species in the proposed survey area are available from two sources: (1) the NMFS Southwest Fishery Science Center (SWFSC) habitat model that estimates eastern tropical Pacific Ocean (ETP) cetacean densities on a finer spatial scale than traditional line-transect analyses by using a continuous function of habitat variables, *e.g.,* sea surface temperature, depth, distance from shore, and prey density (Barlow *et al.,* 2009b); and (2) densities from the offshore stratum of the surveys of Hawaiian waters conducted in August–November 2002 (Barlow, 2006).

For the ETP ship transect surveys, the SWFSC based the models on data from 12 SWFSC ship-based cetacean and ecosystem assessment surveys conducted during July–December 1986–2006, extending east of the proposed survey area.

The models have been incorporated into a web-based Geographic Information System (GIS) developed by Duke University's Department of Defense Strategic Environmental Research and Development Program (SERDP) team in close collaboration with the SWFSC SERDP team (Read *et al.,* 2009). For the cetacean species in the model, L-DEO used the GIS to obtain mean densities in the proposed survey area, *i.e.,* in a rectangle bounded by 150 and 156° W and 5 and 10° N. For species not included in the model, we used densities from the offshore stratum of the surveys of Hawaiian waters conducted in August–November 2002 (Barlow 2006).

Table 3 in L-DEO's application shows estimated densities for each cetacean species that could occur in the proposed survey area. They have corrected the densities for both trackline detection probability and availability bias by the authors. Trackline detection probability bias is associated with diminishing sightability with increasing lateral distance from the trackline [$f(0)$]. Availability bias refers to the fact that there is less than a 100 percent probability of sighting an animal that is present along the survey trackline [$g(0)$].

Because survey effort within the proposed survey area is limited, and densities for some species are from offshore Hawaiian waters, there is some uncertainty about the representativeness of the data and the assumptions used in the calculations below. However, the approach used here is believed to be the best available approach.

L-DEO's estimates of exposures to various sound levels assume that the proposed surveys will be completed. As is typical during offshore ship surveys, inclement weather and equipment malfunctions are likely to cause delays and may limit the number of useful line-kilometers of seismic operations that can be undertaken. L-DEO has included an additional 25 percent of line transects to account for mission uncertainty and to accommodate turns and lines that may need to be repeated. Furthermore, any marine mammal sightings within or near the designated exclusion zones will result in the power down or shut down of seismic operations as a mitigation measure. Thus, the following estimates of the numbers of marine mammals potentially exposed to sound levels of 160 dB re: 1 μPa are precautionary and probably overestimate the actual numbers of marine mammals that might be involved. These estimates also assume that there will be no weather, equipment, or mitigation delays, which is highly unlikely.

L-DEO estimated the number of different individuals that may be exposed to airgun sounds with received levels greater than or equal to 160 dB re: 1 μPa on one or more occasions by considering the total marine area that would be within the 160-dB radius around the operating airgun array on at least one occasion and the expected density of marine mammals. The number of possible exposures (including repeated exposures of the same individuals) can be estimated by considering the total marine area that would be within the 160-dB radius around the operating airguns, including areas of overlap. In the proposed survey, the seismic lines are parallel and in close proximity; thus individuals could be exposed on two or more occasions. The area including overlap is 1.01 times

the area excluding overlap. Thus a marine mammal that stayed in the survey area during the entire survey could be exposed once, on average. Moreover, it is unlikely that a particular animal would stay in the area during the entire survey.

The number of different individuals potentially exposed to received levels greater than or equal to 160 re: 1 μPa was calculated by multiplying:

(1) The expected species density, times

(2) The anticipated area to be ensonified to that level during airgun operations excluding overlap, which is approximately 1,853 km^2 (715.4 mi^2).

The area expected to be ensonified was determined by entering the planned survey lines into a MapInfo GIS, using the GIS to identify the relevant areas by ''drawing'' the applicable 160-dB buffer (see Table 1) around each seismic line, and then calculating the total area within the buffers. Areas of overlap were included only once when estimating the number of individuals exposed. Applying this approach, approximately 2,316 km^2 (894.2 mi^2) would be within the 160-dB isopleth on one or more occasions during the survey. Because this approach does not allow for turnover in the mammal populations in the study area during the course of the survey, the actual number of individuals exposed could be underestimated. However, the approach assumes that no cetaceans will move away from or toward the trackline as the *Langseth* approaches in response to increasing sound levels prior to the time the levels reach 160 dB, which will result in overestimates for those species known to avoid seismic vessels.

Table 3 in this notice shows estimates of the number of individual cetaceans that potentially could be exposed to greater than or equal to 160 dB re: 1 μPa during the seismic survey if no animals moved away from the survey vessel. The requested take authorization is shown in the far right column of Table 3. For endangered species, the requested take authorization reflects the mean group size in the ETP (Jackson *et al.,* 2008) for the particular species in cases where the calculated number of individuals exposed was between 0.05 and the mean group size (*i.e.,* for the sperm whale). For non-listed species, the requested take authorization reflects the mean group size in the SWFSC survey area (Barlow *et al.,* 2008) for the particular species in cases where the calculated number of individuals exposed was between one and the mean group size.

The total estimate of the number of individual cetaceans that could be exposed to seismic sounds with received levels greater than or equal to 160 dB re: 1 μPa during the proposed survey is 828 (see Table 3 in this notice; Table 4 in L-DEO's application). That total includes: four Bryde's whales or 0.01 percent of the regional population; and 7 sperm whales (also listed as endangered) or 0.03 percent of the regional population could be exposed during the survey. L-DEO did not estimate take of endangered humpback, sei, blue, or fin whales or Hawaiian monk seals because of the low likelihood of encountering these species during the cruise. In addition, 18 beaked whales (16 Cuvier's, one Longman's, and one *Mesoplodon* spp.) could be exposed during the survey (see Table 3 in this notice; Table 4 in L-DEO's application). Most (94.7 percent) of the cetaceans that could be potentially exposed are delphinids (*e.g.,* spinner, pantropical spotted, and striped dolphins are estimated to be the most common species in the area) with maximum estimates ranging from four to 425 species exposed to levels greater than or equal to 160 dB re: 1 μPa.

TABLE 3—ESTIMATES OF THE POSSIBLE NUMBERS OF MARINE MAMMALS EXPOSED TO DIFFERENT SOUND LEVELS DURING L-DEO'S PROPOSED SEISMIC SURVEY IN THE CENTRAL PACIFIC OCEAN DURING MAY, 2012

Species	Estimated number of individuals exposed to sound levels ≥ 160 dB re: 1 μPa [1]	Approximate percent of regional population [2]	Requested take authorization
Bryde's whale	1	0.01	[4] 4
Blue whale	0	< 0.01	0
Sperm whale	7	0.03	[4] 8
Dwarf sperm whale	18	0.16	18
Cuvier's beaked whale	16	0.08	16
Longman's beaked whale	1	0.36	[4] 14
Mesoplodon spp.[3]	1	<0.01	[4] 4
Rough-toothed dolphin	3	<0.01	[4] 13
Bottlenose dolphin	11	<0.01	[4] 12
Pantropical spotted dolphin	279	0.06	279
Spinner dolphin	425	0.02	425
Striped dolphin	38	<0.01	[4] 46
Fraser's dolphin	11	<0.01	[4] 182
Risso's dolphin	2	<0.01	[4] 14
Melon-headed whale	3	0.01	[4] 101
False killer whale	0	<0.01	[4] 9
Short-finned pilot whale	12	<0.01	[4] 24

[1] Estimates are based on densities from Table 3 and an ensonified area (including 25 percent contingency).
[2] Regional population size estimates are from Table 2.
[3] Includes ginkgo-toothed and/or Blainville's beaked whales.
[4] Requested take authorization increased to mean group size (see text on page 40).

Encouraging and Coordinating Research

L-DEO and NSF will coordinate the planned marine mammal monitoring program associated with the seismic survey in the central Pacific Ocean with any parties that may have or express an interest in the proposed seismic survey area. L-DEO and NSF have coordinated, and will continue to coordinate, with other applicable Federal agencies as required, and will comply with their requirements. Pursuant to IHA requirements, L-DEO will submit a

monitoring report to NMFS 90 days after the proposed survey.

Negligible Impact and Small Numbers Analysis and Determination

NMFS has defined ''negligible impact'' in 50 CFR 216.103 as ''* * * an impact resulting from the specified activity that cannot be reasonably expected to, and is not reasonably likely to, adversely affect the species or stock through effects on annual rates of recruitment or survival.'' In making a negligible impact determination, NMFS evaluated factors such as:

(1) The number of anticipated injuries, serious injuries, or mortalities;

(2) The number, nature, and intensity, and duration of Level B harassment (all relatively limited);

(3) The context in which the takes occur (*i.e.,* impacts to areas of significance, impacts to local populations, and cumulative impacts when taking into account successive/contemporaneous actions when added to baseline data);

(4) The status of stock or species of marine mammals (*i.e.,* depleted, not depleted, decreasing, increasing, stable, and impact relative to the size of the population);

(5) Impacts on habitat affecting rates of recruitment/survival; and

(6) The effectiveness of monitoring and mitigation measures (*i.e.,* the manner and degree in which the measure is likely to reduce adverse impacts to marine mammals, the likely effectiveness of the measures, and the practicability of implementation).

For reasons stated previously in this document, the specified activities associated with the marine seismic survey are not likely to cause PTS, or other non-auditory injury, serious injury, or death because:

The likelihood that, given sufficient notice through relatively slow ship speed, marine mammals are expected to move away from a noise source that is annoying prior to its becoming potentially injurious;

(1) The potential for temporary or permanent hearing impairment is relatively low and would likely be avoided through the incorporation of the required monitoring and mitigation measures (described above this section);

(2) The fact that cetaceans would have to be closer than 70 m (229.7 ft) in deep water when the two GI airgun array is in 3 m (9.8 ft) tow depth from the vessel to be exposed to levels of sound believed to have even a minimal chance of causing PTS; and

(3) The likelihood that marine mammal detection ability by trained PSOs is high at close proximity to the vessel.

No injuries, serious injuries, or mortalities are anticipated to occur as a result of L-DEO's planned marine seismic survey, and none are proposed to be authorized by NMFS. Only short-term, behavioral disturbance is anticipated to occur due to the brief and sporadic duration of the survey activities. Table 3 in this document outlines the number of Level B harassment takes that are anticipated as a result of the activities. Due to the nature, degree, and context of Level B (behavioral) harassment anticipated and described (see Potential Effects on Marine Mammals section above) in this notice, the proposed activity is not expected to impact rates of recruitment or survival for any affected species or stock.

Many animals perform vital functions, such as feeding, resting, traveling, and socializing, on a diel cycle (*i.e.,* 24 hr cycle). Behavioral reactions to noise exposure (such as disruption of critical life functions, displacement, or avoidance of important habitat) are more likely to be significant if they last more than one diel cycle or recur on subsequent days (Southall *et al.,* 2007). While seismic operations are anticipated to occur on consecutive days, the entire duration of the survey is not expected to last more than six days and the *Langseth* will be continuously moving along planned tracklines. Therefore, the seismic survey will be increasing sound levels in the marine environment surrounding the vessel for several weeks in the study area. Of the 26 marine mammal species under NMFS' jurisdiction likely to occur in the survey area, six are listed as endangered under the ESA: The humpback, sei, fin, blue, and sperm whale and the Hawaiian monk seal. These species are also considered depleted under the MMPA. However, no take of endangered humpback, sei, blue, or fin whales or Hawaiian monk seals was requested because of the low likelihood of encountering these species during the cruise. As mentioned previously, the survey would not occur in any areas designated as critical habitat for ESA-listed species and would not adversely impact marine mammal habitat. There is generally insufficient data to determine population trends for the other depleted species in the study area. To protect these animals (and other marine mammals in the study area), L-DEO must cease or reduce airgun operations if animals enter designated zones. No injury, serious injury, or mortality is expected to occur and due to the nature, degree, and context of the Level B harassment anticipated, the activity is not expected to impact rates of recruitment or survival.

As mentioned previously, NMFS estimates that 16 species of marine mammals under its jurisdiction could be potentially affected by Level B harassment over the course of the proposed IHA. For each species, these numbers are small (each less than one percent) relative to the regional population size. The population estimates for the marine mammal species that may be taken by harassment were provided in Table 2 of this document.

NMFS' practice has been to apply the 160 dB re 1 μPa (rms) received level threshold for underwater impulse sound levels to determine whether take by Level B harassment occurs. Southall *et al.* (2007) provide a severity scale for ranking observed behavioral responses of both free-ranging marine mammals and laboratory subjects to various types of anthropogenic sound (see Table 4 in Southall *et al.* [2007]).

NMFS has preliminarily determined, provided that the aforementioned mitigation and monitoring measures are implemented, that the impact of conducting a marine seismic survey in the central Pacific Ocean, May, 2012, may result, at worst, in a temporary modification in behavior and/or low-level physiological effects (Level B harassment) of small numbers of certain species of marine mammals. See Table 3 (above) for the requested authorized take numbers of cetaceans.

While behavioral modifications, including temporarily vacating the area during the operation of the airgun(s), may be maCde by these species to avoid the resultant acoustic disturbance, the availability of alternate areas within this region and the short and sporadic duration of the research activities, have led NMFS to preliminarily determine that this action will have a negligible impact on the species in the specified geographic region.

Based on the analysis contained herein of the likely effects of the specified activity on marine mammals and their habitat, and taking into consideration the implementation of the mitigation and monitoring measures, NMFS preliminarily finds that L-DEO's planned research activities, will result in the incidental take of small numbers of marine mammals, by Level B harassment only, and that the total taking from the marine seismic survey will have a negligible impact on the affected species or stocks of marine mammals; and that impacts to affected species or stocks of marine mammals

have been mitigated to the lowest level practicable.

Impact on Availability of Affected Species or Stock for Taking for Subsistence Uses

Section 101(a)(5)(D) also requires NMFS to determine that the authorization will not have an unmitigable adverse effect on the availability of marine mammal species or stocks for subsistence use. There are no relevant subsistence uses of marine mammals in the study area (offshore waters of the Line Islands in the central Pacific Ocean) that implicate MMPA section 101(a)(5)(D).

Endangered Species Act

Of the species of marine mammals that may occur in the proposed survey area, several are listed as endangered under the ESA, including the humpback, sei, fin, blue, and sperm whale and Hawaiian monk seal. L-DEO did not request take of endangered humpback, sei, blue, or fin whales or Hawaiian monk seals because of the low likelihood of encountering these species during the cruise. As mentioned previously, the survey would not occur in any areas designated as critical habitat for ESA-listed species and would not adversely impact marine mammal habitat.

Under section 7 of the ESA, NSF has initiated formal consultation with the NMFS', Office of Protected Resources, Endangered Species Act Interagency Cooperation Division on this proposed seismic survey. NMFS' Office of Protected Resources, Permits and Conservation Division has initiated formal consultation under section 7 of the ESA with NMFS' Office of Protected Resources, Endangered Species Act Interagency Cooperation Division to obtain a Biological Opinion evaluating the effects of issuing the IHA on threatened and endangered marine mammals and, if appropriate, authorizing incidental take. NMFS will conclude formal section 7 consultation prior to making a determination on whether or not to issue the IHA. If the IHA is issued, NSF and L-DEO, in addition to the mitigation and monitoring requirements included in the IHA, will be required to comply with the Terms and Conditions of the Incidental Take Statement corresponding to NMFS' Biological Opinion issued to both NSF and NMFS' Office of Protected Resources.

National Environmental Policy Act (NEPA)

With its complete application, NSF and L-DEO provided NMFS a ''Environmental Assessment and Finding of No Significant Impact (FONSI) Determination Pursuant to the National Environmental Policy Act, (NEPA: 42 U.S.C. 4321 *et seq.*) and Executive Order 12114 for a ''Marine Geophysical Survey by the R/V *Marcus G. Langseth* in the Central Pacific Ocean May, 2012,'' which incorporates an ''Environmental Assessment of a Marine Geophysical Survey by the R/V *Marcus G. Langseth* in the central Pacific Ocean, May, 2012,'' prepared by LGL on behalf of NSF and L-DEO. The EA analyzes the direct, indirect, and cumulative environmental impacts of the specified activities on marine mammals including those listed as threatened or endangered under the ESA. NMFS conducted an independent review and evaluation of the document for sufficiency and compliance with the Council of Environmental Quality and NOAA Administrative Order 216–6 § 5.09(d), Environmental Review Procedures for Implementing the National Environmental Policy Act, and determined that issuance of the IHA is not likely to result in significant impacts on the human environment. Consequently, NMFS plans to adopt NSF's EA and prepared a FONSI for the issuance of the IHA. An Environmental Impact Statement is not required and will not be prepared for the action.

Proposed Authorization

NMFS proposes to issue an IHA to L-DEO for conducting a marine geophysical survey in the central Pacific Ocean, provided the previously mentioned mitigation, monitoring, and reporting requirements are incorporated. The duration of the IHA would not exceed one year from the date of its issuance.

Information Solicited

NMFS requests interested persons to submit comments and information concerning this proposed project and NMFS' preliminary determination of issuing an IHA (see **ADDRESSES**). Concurrent with the publication of this notice in the **Federal Register**, NMFS is forwarding copies of this application to the Marine Mammal Commission and its Committee of Scientific Advisors.

Dated: March 26, 2012.

James H. Lecky,

Director, Office of Protected Resources, National Marine Fisheries Service.

[FR Doc. 2012–7717 Filed 3–29–12; 8:45 am]

BILLING CODE 3510–22–P

COMMITTEE FOR PURCHASE FROM PEOPLE WHO ARE BLIND OR SEVERELY DISABLED

Procurement List; Additions

AGENCY: Committee for Purchase From People Who Are Blind or Severely Disabled.

ACTION: Additions to the Procurement List.

SUMMARY: This action adds services to the Procurement List that will be provided by nonprofit agencies employing persons who are blind or have other severe disabilities.

DATES: *Effective Date:* 4/30/2012.

ADDRESSES: Committee for Purchase From People Who Are Blind or Severely Disabled, Jefferson Plaza 2, Suite 10800, 1421 Jefferson Davis Highway, Arlington, Virginia, 22202–3259.

FOR FURTHER INFORMATION CONTACT: Barry S. Lineback, Telephone: (703) 603–7740, Fax: (703) 603–0655, or email *CMTEFedReg@AbilityOne.gov*.

SUPPLEMENTARY INFORMATION:

Additions

On 12/23/2011 (76 FR 80346), 1/6/2012 (77 FR 780) and 2/3/2012 (77 FR 5495–5496), the Committee for Purchase From People Who Are Blind or Severely Disabled published notices of proposed additions to the Procurement List.

After consideration of the material presented to it concerning capability of qualified nonprofit agencies to provide the services and impact of the additions on the current or most recent contractors, the Committee has determined that the services listed below are suitable for procurement by the Federal Government under 41 U.S.C. 8501–8506 and 41 CFR 51–2.4.

Regulatory Flexibility Act Certification

I certify that the following action will not have a significant impact on a substantial number of small entities. The major factors considered for this certification were:

1. The action will not result in any additional reporting, recordkeeping or other compliance requirements for small entities other than the small organizations that will provide the services to the Government.

2. The action will result in authorizing small entities to provide the services to the Government.

3. There are no known regulatory alternatives which would accomplish the objectives of the Javits-Wagner-O'Day Act (41 U.S.C. 8501–8506) in connection with the services proposed for addition to the Procurement List.

End of Certification

Accordingly, the following services are added to the Procurement List:

Services

Service Type/Location: Dining Facility Attendant, Buildings 1162 and 2382, Fort Polk, LA.
NPA: Lakeview Center, Inc., Pensacola, FL.
Contracting Activity: Dept of the Army, W6QM FT Polk Doc, Fort Polk, LA.

A comment was received from a consulting firm noting that if this project goes out for a full food service contract, then it would fall under the Randolph-Sheppard Act Program.

The Committee for Purchase From People Who Are Blind or Severely Disabled (Committee) operates pursuant to statutory and regulatory requirements. The Committee is aware of and complies with Section 856 of Public Law 108–375. In this instance, the requirement is for dining facility attendant—not a full food service contract. Accordingly, this project is within the authority of the Committee to consider for the AbilityOne Program Procurement List.

Service Type/Location: Dining Facility Attendant and Cook Support, 120th Fighter Wing, Montana Air National Guard, 2800 Airport Ave B, Bldg. 62, Big Sky Diner, Great Falls, MT.
NPA: Skils'kin, Spokane, WA.
Contracting Activity: Dept of the Army, W7NK USPFO Activity MT ARNG, Fort Harrison, MT.

Barry S. Lineback,

Director, Business Operations.

[FR Doc. 2012–7692 Filed 3–29–12; 8:45 am]

BILLING CODE 6353–01–P

COMMITTEE FOR PURCHASE FROM PEOPLE WHO ARE BLIND OR SEVERELY DISABLED

Procurement List; Proposed Deletions

AGENCY: Committee for Purchase From People Who Are Blind or Severely Disabled.

ACTION: Proposed deletions from the procurement list.

SUMMARY: The Committee is proposing to delete products from the Procurement List previously furnished by the nonprofit agency employing persons who are blind or have other severe disabilities.

DATES: Comments must be received on or before April 30, 2012.

ADDRESSES: Committee for Purchase From People Who Are Blind or Severely Disabled, Jefferson Plaza 2, Suite 10800, 1421 Jefferson Davis Highway, Arlington, Virginia 22202–3259.

For Further Information or to Submit Comments Contact: Barry S. Lineback, Telephone: (703) 603–7740, Fax: (703) 603–0655, or email *CMTEFedReg@AbilityOne.gov.*

SUPPLEMENTARY INFORMATION: This notice is published pursuant to 41 U.S.C. 8503(a)(2) and 41 CFR 51–2.3. Its purpose is to provide interested persons an opportunity to submit comments on the proposed actions.

Deletions

Regulatory Flexibility Act Certification

I certify that the following action will not have a significant impact on a substantial number of small entities. The major factors considered for this certification were:

1. If approved, the action will not result in additional reporting, recordkeeping or other compliance requirements for small entities.

2. If approved, the action may result in authorizing small entities to furnish the products to the Government.

3. There are no known regulatory alternatives which would accomplish the objectives of the Javits-Wagner-O'Day Act (41 U.S.C. 8501–8506) in connection with the products proposed for deletion from the Procurement List.

End of Certification

The following products are proposed for deletion from the Procurement List:

Products

NSN: 8920–00–823–7221—Cake Mix
NSN: 8920–00–823–7223—Cake Mix
NSN: 8920–01–250–9522—Pancake Mix
NPA: Advocacy and Resources Corporation, Cookeville, TN
Contracting Activity: DEFENSE LOGISTICS AGENCY TROOP SUPPORT, PHILADELPHIA, PA.

Barry S. Lineback,

Director, Business Operations.

[FR Doc. 2012–7691 Filed 3–29–12; 8:45 am]

BILLING CODE 6353–01–P

CONSUMER PRODUCT SAFETY COMMISSION

Sunshine Act Meetings Notice

TIME AND DATE: Wednesday, April 4, 2012, 10 a.m.–11 a.m.

PLACE: Hearing Room 420, Bethesda Towers, 4330 East West Highway, Bethesda, Maryland.

STATUS: Closed to the Public.

Matter To Be Considered

Compliance Status Report

The Commission staff will brief the Commission on the status of compliance matters.

For a recorded message containing the latest agenda information, call (301) 504–7948.

CONTACT PERSON FOR MORE INFORMATION: Todd A. Stevenson, Office of the Secretary, U.S. Consumer Product Safety Commission, 4330 East West Highway, Bethesda, MD 20814, (301) 504–7923.

Dated: March 28, 2012.

Todd A. Stevenson,

Secretary.

[FR Doc. 2012–7815 Filed 3–28–12; 4:15 pm]

BILLING CODE 6355–01–P

CORPORATION FOR NATIONAL AND COMMUNITY SERVICE

Proposed Information Collection; Comment Request

AGENCY: Corporation for National and Community Service.

ACTION: Notice.

SUMMARY: The Corporation for National and Community Service (the Corporation), as part of its continuing effort to reduce paperwork and respondent burden, conducts a pre-clearance consultation program to provide the general public and federal agencies with an opportunity to comment on proposed and/or continuing collections of information in accordance with the Paperwork Reduction Act of 1995 (PRA95) (44 U.S.C. 3506(c)(2)(A)). This program helps to ensure that requested data can be provided in the desired format, reporting burden (time and financial resources) is minimized, collection instruments are clearly understood, and the impact of collection requirement on respondents can be properly assessed.

Currently, the Corporation is soliciting comments concerning its proposed new collection request for a Field Assessment for Understanding the Involvement of Veterans and Military Families in National Service. The Field Assessment will include interviews with Corporation-funded programs and projects that involve veterans and military family members as national service participants or service beneficiaries. Through the interviews, the Corporation will collect detailed information on the models and strategies that national service programs and projects have developed and implemented to engage and serve veterans and military families. The aim of the study is to begin to build evidence of impact and isolate the unique value that national service brings to meeting the needs of these populations. Selection will be limited to those programs and projects that have shown significant and/or strategic

efforts to involve veterans and military families. Participation in the information collection is voluntary and will not be used in grant funding decisions.

Copies of the information collection request can be obtained by contacting the office listed in the addresses section of this notice.

DATES: Written comments must be submitted to the individual and office listed in the **ADDRESSES** section by May 29, 2012.

ADDRESSES: You may submit comments, identified by the title of the information collection activity, by any of the following methods:

(1) *By mail sent to:* Corporation for National and Community Service, Office of Strategy and Special Initiatives; Attention LaMonica Shelton, Associate Director for Policy and Communications, 401 W. Peach Street NW., Suite 1600, Atlanta, GA, 30308.

(2) By hand delivery or by courier at the mail address given in paragraph (1) above, between 9 a.m. and 4 p.m. Eastern Time, Monday through Friday, except Federal holidays.

(3) *By fax to:* (404) 331–2898, Attention: LaMonica Shelton, Associate Director for Policy and Communications.

(4) *Electronically through the Corporation's email address system: kspring@cns.gov*. Individuals who use a telecommunications device for the deaf (TTY–TDD) may call 1–800–833–3722 between 8 a.m. and 8 p.m. Eastern Time, Monday through Friday.

FOR FURTHER INFORMATION CONTACT: Kimberly Spring, (202) 606–6629, or by email at *kspring@cns.gov*.

SUPPLEMENTARY INFORMATION: The Corporation is particularly interested in comments that:

- Evaluate whether the proposed collection of information is necessary for the proper performance of the functions of the Corporation, including whether the information will have practical utility;
- Evaluate the accuracy of the agency's estimate of the burden of the proposed collection of information, including the validity of the methodology and assumptions used;
- Enhance the quality, utility, and clarity of the information to be collected; and
- Minimize the burden of the collection of information on those who are expected to respond, including the use of appropriate automated, electronic, mechanical, or other technological collection techniques or other forms of information technology (e.g., permitting electronic submissions of responses).

Background

Data collection for the Field Assessment for Understanding the Involvement of Veterans and Military Families in National Service will involve telephone interviews with Corporation-funded programs and projects that engage or serve veterans and military family members. Through the interviews, the Corporation will be able to collect information on the experiences and demonstrated successes in using national service to involve and meet the needs of veterans and military families.

Current Action

This is a new information collection request.

Type of Review: New.

Agency: Corporation for National and Community Service.

Title: Field Assessment for Understanding the Involvement of Veterans and Military Families in National Service.

OMB Number: None.

Agency Number: None.

Affected Public: Non-profit organizations and state, city/local, and tribal government agency staff.

Total Respondents: 100.

Frequency: Once.

Average Time Per Response: Averages 50 minutes.

Estimated Total Burden Hours: 83.3 hours.

Total Burden Cost (capital/startup): None.

Total Burden Cost (operating/maintenance): None.

Comments submitted in response to this notice will be summarized and/or included in the request for Office of Management and Budget approval of the information collection request; they will also become a matter of public record.

Dated: March 26, 2012.

Nathan Dietz,

Associate Director of Research and Evaluation, Office of Strategy and Special Initiatives.

[FR Doc. 2012–7689 Filed 3–29–12; 8:45 am]

BILLING CODE 6050–$$–P

DEPARTMENT OF DEFENSE

Office of the Secretary

Renewal of Air University Board of Visitors

AGENCY: DoD.

ACTION: Renewal of Federal Advisory Committee.

SUMMARY: Under the provisions of the Federal Advisory Committee Act of 1972 (5 U.S.C. Appendix), the Government in the Sunshine Act of 1976 (5 U.S.C. 552b), and 41 CFR 102–3.50(d), the Department of Defense gives notice that it is renewing the charter for the Air University Board of Visitors (hereafter referred to as ''the Board'').

The Board is a discretionary federal advisory committee that shall provide the Secretary of Defense through the Secretary of the Air Force, independent advice and recommendations on educational and doctrinal and research policies and activities of Air University. The Board shall:

a. Review and evaluate progress of the educational programs and the support activities of the university;

b. Review and evaluate the published statement of purpose, institutional polices, and financial resources of the university; and

c. Review and evaluate the educational effectiveness, quality of student learning, administrative and educational support services, and teaching, research and public service of the university.

The Secretary of the Air Force may act upon the Board's advice and recommendations.

The Board shall be comprised of no more 35 members appointed by the Secretary of Defense who are eminent authorities in the field of air power, defense, management, leadership, and academia. All Board member appointments must be renewed by the Secretary of Defense on an annual basis.

The Board's Chairperson shall be elected by a vote of the membership and approved by the Air University Commander and President. The President of the Naval Postgraduate School shall serve as an ex-offico member.

Board members, who are not full-time or permanent part-time Federal officers or employees, shall be appointed to serve as experts and consultants under the authority of 5 U.S.C. § 3109 and shall serve as special government employee members. With the exception of travel and per diem for official Board related travel, Board members shall serve without compensation.

Each Board member is appointed to provide advice on behalf of the government on the basis of his or her best judgment without representing any particular point of view and in a manner that is free from conflict of interest.

The Department, when necessary, and consistent with the Board's mission and DoD policies and procedures, may establish subcommittees deemed necessary to support the Board.

Establishment of subcommittees will be based upon a written determination, to include terms of reference, by the Secretary of Defense, the Deputy Secretary of Defense or the advisory committee's sponsor.

The Committee shall establish five permanent subcommittees:

1. The Academic Affairs Subcommittee shall be comprised of nine members. The primary focus of the subcommittee is to provide advice and recommendations to the AU Board of Visitors concerning policies and practices concerning all academic matters across the university. More specifically, the subcommittee will review schools, programs, degree programs, academic and strategic plans, legislative and accreditation issues. The subcommittee will also review policies and practices on academic personnel (appointment, promotion, tenure, sabbaticals, etc) and the registrar functions. The estimated number and frequency of subcommittee meetings is two per year.

2. The Air Force Institute of Technology (AFIT) subcommittee shall be comprised of eight members. The primary focus of the subcommittee is to provide advice and recommendations to the Air University Board of Visitors concerning engineering and technology graduate programs. The estimated number and frequency of subcommittee meetings is one per year.

3. The Future Learning and Technology Subcommittee shall be comprised of six members. The subcommittee's primary focus is to provide advice and recommendations to the Air University Board of Visitors concerning the appropriate use of technology in delivery of educational programs; effective and efficient use of administrative computing; duplication; technological challenges, and implementation of new learning environments. The estimated number and frequency of subcommittee meetings is two per year.

4. The Institutional Advancement Subcommittee shall be comprised of nine members. The primary focus of the subcommittee is to provide advice and recommendations to the Air University Board of Visitors concerning policies regarding: federal and state grants and private funding of research, teaching and service (Grants); Air University Foundation; alumni affairs; community and outreach matters; public affairs/external relations; public relations, branding, advertising, news and information; facilities improvements and initiatives; strategic plans; spending and policy decisions (budget, contracts, salaries, etc.); tracking and analysis of administrative costs and effectiveness; reviewing proposed additions and renovations of existing facilities; and recommendations of candidates for Air University honorary degrees. The estimated number and frequency of subcommittee meetings is two per year.

5. The Air University Research Subcommittee shall be comprised of six members. The primary focus of the subcommittee is to provide advice and recommendations to the Air University Board of Visitors concerning research processes across the University (to include the Air Force Institute of Technology (AFIT), Air War College (AWC), Air Command and Staff College (ACSC), School of Advanced Air and Space Studies (SAASS), Air Force Research Institute (AFRI) and Fairchild Research Information Center (FRIC)) as well as discuss publication opportunities that enhance the University's effect across the Air Force and the world wide. The estimated number and frequency of subcommittee meetings is two per year.

Such subcommittees shall not work independently of the chartered Board, and shall report all their recommendations and advice to the Board for full deliberation and discussion. Subcommittees have no authority to make decisions on behalf of the chartered Board; nor can any subcommittee or its members update or report directly to the DoD or any Federal officers or employees. Subcommittees shall comply with FACA.

All subcommittee members shall be appointed in the same manner as the Board members; that is, the Secretary of Defense shall appoint subcommittee members even if the member in question is already a Board member.

Subcommittee members, if not full-time or part-time government employees, shall be appointed to serve as experts and consultants under the authority of 5 U.S.C. § 3109, and shall serve as special government employees, whose appointments must be renewed by the Secretary of Defense on an annual basis. With the exception of travel and per diem for official Board related travel, subcommittee members shall serve without compensation.

All subcommittees operate under the provisions of FACA, the Government in the Sunshine Act of 1976 (5 U.S.C. 552b), governing Federal statutes and regulations, and governing DoD policies/procedures.

FOR FURTHER INFORMATION CONTACT: Jim Freeman, Deputy Advisory Committee Management Officer for the Department of Defense, 703–692–5952.

SUPPLEMENTARY INFORMATION: The Board shall meet at the call of the Board's Designated Federal Officer, in consultation with the Chairperson and the Commander and President of Air University. The estimated number of Board meetings is four per year.

In addition, the Designated Federal Officer is required to be in attendance at all Board and subcommittee meetings for the entire duration of each and every meeting; however, in the absence of the Designated Federal Officer, the Alternate Designated Federal Officer shall attend the entire duration of the Board or subcommittee meeting.

Pursuant to 41 CFR 102–3.105(j) and 102–3.140, the public or interested organizations may submit written statements to Air University Board of Visitors membership about the Board's mission and functions. Written statements may be submitted at any time or in response to the stated agenda of planned meeting of Air University Board of Visitors.

All written statements shall be submitted to the Designated Federal Officer for the Air University Board of Visitors, and this individual will ensure that the written statements are provided to the membership for their consideration. Contact information for the Air University Board of Visitors' Designated Federal Officer can be obtained from the GSA's FACA Database—*https://www.fido.gov/facadatabase/public.asp.*

The Designated Federal Officer, pursuant to 41 CFR 102–3.150, will announce planned meetings of the Air University Board of Visitors. The Designated Federal Officer, at that time, may provide additional guidance on the submission of written statements that are in response to the stated agenda for the planned meeting in question.

Dated: March 26, 2012.

Aaron Siegel,

Alternate OSD Federal Register Liaison Officer, Department of Defense.

[FR Doc. 2012–7616 Filed 3–29–12; 8:45 am]

BILLING CODE 5001–06–P

DEPARTMENT OF DEFENSE

Office of the Secretary

Notification of an Open Meeting of the National Defense University Board of Visitors (BOV)

AGENCY: National Defense University, DoD.

ACTION: Notice of open meeting.

SUMMARY: The National Defense University (NDU), Designated Federal

Officer, has scheduled a meeting of the Board of Visitors. The National Defense University Board of Visitors is a Federal Advisory Board. The Board meets twice each year in proceedings that are open to the public.

DATES: The meeting will be held on May 2 and 3, 2012, from 11:30 a.m. to 5 p.m. on May 2 and continuing on May 3 from 8 a.m. to 1 p.m.

ADDRESSES: The Board of Visitors meeting will be held at Marshall Hall, Building 62, Room 155, the National Defense University, 300 5th Avenue SW., Fort McNair, Washington, DC 20319–5066.

FOR FURTHER INFORMATION CONTACT: The point of contact for this notice of Open Meeting is Ms. Dolores Hodge at (202) 685–0082, Fax (202) 685–3920 or *HodgeD@ndu.edu.*

SUPPLEMENTARY INFORMATION: The future agenda will include discussion on Defense transformation, faculty development, facilities, information technology, curriculum development, as well as other operational issues and areas of interest affecting the day-to-day operations of the National Defense University and its components. The meeting is open to the public; limited space made available for observers will be allocated on a first come, first served basis. Written statements to the committee may be submitted to the committee at any time or in response to a stated planned meeting agenda by fax or email to the point of contact person listed in **FOR FURTHER INFORMATION CONTACT**. (Subject Line: Comment/ Statement to the NDU BOV).

Dated: March 27, 2012.

Aaron Siegel,

Alternate OSD Federal Register Liaison Officer, Department of Defense.

[FR Doc. 2012–7653 Filed 3–29–12; 8:45 am]

BILLING CODE 5001–06–P

DEPARTMENT OF DEFENSE

Office of the Secretary

[Docket ID: DOD–2012–OS–0040]

Privacy Act of 1974; System of Records

AGENCY: Office of the Secretary of Defense, DoD.

ACTION: Notice to alter a system of records.

SUMMARY: The Office of the Secretary of Defense proposes to alter a system of records in its inventory of record systems subject to the Privacy Act of 1974 (5 U.S.C. 552a), as amended.

DATES: This proposed action will be effective on April 30, 2012 unless comments are received which result in a contrary determination.

ADDRESSES: You may submit comments, identified by docket number and title, by any of the following methods:

- *Federal Rulemaking Portal: http://www.regulations.gov.* Follow the instructions for submitting comments.
- *Mail:* Federal Docket Management System Office, 4800 Mark Center Drive, East Tower, 2nd Floor, Suite 02G09, Alexandria, VA 22350–3100.

Instructions: All submissions received must include the agency name and docket number for this **Federal Register** document. The general policy for comments and other submissions from members of the public is to make these submissions available for public viewing on the Internet at *http://www.regulations.gov* as they are received without change, including any personal identifiers or contact information.

FOR FURTHER INFORMATION CONTACT: Ms. Cindy Allard, Chief, OSD/JS Privacy Office, Freedom of Information Directorate, Washington Headquarters Services, 1155 Defense Pentagon, Washington, DC 20301–1155, or by phone at (571) 372–0461.

SUPPLEMENTARY INFORMATION: The Office of the Secretary of Defense notices for systems of records subject to the Privacy Act of 1974 (5 U.S.C. 552a), as amended, have been published in the **Federal Register** and are available from the address in **FOR FURTHER INFORMATION CONTACT**. The proposed system report, as required by 5 U.S.C. 552a(r) of the Privacy Act of 1974, as amended, was submitted on March 26, 2012, to the House Committee on Oversight and Government Reform, the Senate Committee on Governmental Affairs, and the Office of Management and Budget (OMB) pursuant to paragraph 4c of Appendix I to OMB Circular No. A–130, ''Federal Agency Responsibilities for Maintaining Records About Individuals,'' dated February 8, 1996 (February 20, 1996, 61 FR 6427).

Dated: March 26, 2012.

Aaron Siegel,

Alternate OSD Federal Register Liaison Officer, Department of Defense.

DWHS E03

SYSTEM NAME:

Security Review Index File (October 7, 2009, 74 FR 51567).

CHANGES:

* * * * *

CATEGORIES OF INDIVIDUALS COVERED BY THE SYSTEM:

Delete entry and replace with ''Current active duty and Department of Defense (DoD) civilian employees including Foreign Nationals, retired personnel, former DoD employees, and non-active duty members of the Reserve Components that use the security review process to ensure that information they submit for public release does not compromise national security.''

CATEGORIES OF RECORDS IN THE SYSTEM:

Delete entry and replace with ''Name, personal phone numbers (home/cell), personal/home email address, home mailing address of individuals submitting material for security review, title/subject of submitted document, and case number.''

* * * * *

AUTHORITY FOR MAINTENANCE OF THE SYSTEM:

Delete entry and replace with ''10 U.S.C. 113, Secretary of Defense; DoD Directive 5230.09, Clearance of DoD Information for Public Release; and DoD Instruction 5230.29, Security and Policy Review of DoD Information for Public Release.''

PURPOSE(S):

Delete entry and replace with ''To manage the security review process for documents or materials before they are officially released outside of the DoD. The documents and materials of completed security review cases are maintained for historical reference to ensure subsequent reviews, which may be similar in content, are handled consistently.''

* * * * *

STORAGE:

Delete entry and replace with ''Paper file folders and electronic storage media.''

RETRIEVEABILITY:

Delete entry and replace with ''By name, case number and title/subject of submitted document using Security Review Tracking Application (SRTA).''

SAFEGUARDS:

Delete entry and replace with ''Paper records are accessed only by officials with a need to know and appropriate security clearance in accordance with assigned duties. Electronic records require Common Access Card to access and are further password protected with access limited to those individuals who have a need to know and access to SRTA. Records are stored in a secure facility with full time guards in rooms requiring specific authority to access.''

RETENTION AND DISPOSAL:

Delete entry and replace with ''Records are destroyed after 15 years. Appeal files are destroyed 2 years after clearance without amendment; or destroyed 6 years after record was cleared with amendment, or denied clearance.''

* * * * *

NOTIFICATION PROCEDURE:

Delete entry and replace with ''Individuals seeking to determine whether information about themselves is contained in this system of records should address written inquiries to Office of Security Review, Executive Services Directorate, Washington Headquarters Services, 1155 Defense Pentagon, Washington, DC 20301–1155.

Written requests should include the individual's name, case number (if available) and title/subject of document submitted.''

RECORD ACCESS PROCEDURES:

Delete entry and replace with ''Individuals seeking access to information about themselves contained in this system of records should address written inquiries to Office of the Secretary of Defense/Joint Staff, Freedom of Information Requester Service Center, Office of Freedom of Information, Executive Services Directorate, Washington Headquarters Service, 1155 Defense Pentagon, Washington, DC 20301–1155.

Written requests should include the name and number of this system of records notice, the individual's name, case number (if available), title/subject of submitted document, and be signed.''

* * * * *

[FR Doc. 2012–7615 Filed 3–29–12; 8:45 am]

BILLING CODE 5001–06–P

DEPARTMENT OF EDUCATION

Notice of Submission for OMB Review; Institute of Education Sciences; Study of Promising Features of Teacher Preparation Programs; Phase 1—Recruitment

SUMMARY: This Information Collection Request (ICR) seeks clearance to select teacher preparation programs, and recruit districts and schools, collect student rosters, and administer a baseline student achievement test for an experimental study of the effect on student learning of teachers who have experienced certain types of clinical practice features within university-based preparation programs.

DATES: Interested persons are invited to submit comments on or before April 30, 2012.

ADDRESSES: Written comments regarding burden and/or the collection activity requirements should be electronically mailed to *ICDocketMgr@ed.gov* or mailed to U.S. Department of Education, 400 Maryland Avenue SW., LBJ, Washington, DC 20202–4537. Copies of the proposed information collection request may be accessed from *http://edicsweb.ed.gov,* by selecting the ''Browse Pending Collections'' link and by clicking on link number 04792. When you access the information collection, click on ''Download Attachments'' to view. Written requests for information should be addressed to U.S. Department of Education, 400 Maryland Avenue SW., LBJ, Washington, DC 20202–4537. Requests may also be electronically mailed to *ICDocketMgr@ed.gov* or faxed to 202–401–0920. Please specify the complete title of the information collection and OMB Control Number when making your request.

Individuals who use a telecommunications device for the deaf (TDD) may call the Federal Information Relay Service (FIRS) at 1–800–877–8339.

SUPPLEMENTARY INFORMATION: Section 3506 of the Paperwork Reduction Act of 1995 (44 U.S.C. chapter 35) requires that Federal agencies provide interested parties an early opportunity to comment on information collection requests. The Acting Director, Information Collection Clearance Division, Privacy, Information and Records Management Services, Office of Management, publishes this notice containing proposed information collection requests at the beginning of the Departmental review of the information collection. The Department of Education is especially interested in public comment addressing the following issues: (1) Is this collection necessary to the proper functions of the Department; (2) will this information be processed and used in a timely manner; (3) is the estimate of burden accurate; (4) how might the Department enhance the quality, utility, and clarity of the information to be collected; and (5) how might the Department minimize the burden of this collection on the respondents, including through the use of information technology. Please note that written comments received in response to this notice will be considered public records.

Title of Collection: Study of Promising Features of Teacher Preparation Programs; Phase 1—Recruitment.

OMB Control Number: Pending.

Type of Review: New.

Total Estimated Number of Annual Responses: 3,295.

Total Estimated Number of Annual Burden Hours: 3,084.

Abstract: The objective of this study is to use causal methods to examine the effectiveness of certain university-based clinical practice features for novice teachers. Teachers who have experienced certain types of clinical practice features and who have completed those features are hypothesized to produce higher average student test scores than teachers who have not done so. Using a randomized controlled trial, students will be randomly assigned to a pair of teachers in the same school and grade level, one of whom will have experienced the type of clinical practice of interest (''treatment'') while the other will not have experienced the feature (''control''). Average test scores of the two groups will then be compared.

The Phase I—Recruitment ICR entails the identification of recently-hired teacher pairs who meet the study's eligibility requirements. The study will use a multi-step process to identify these teachers, including identifying feasible states for the study, selecting the specific features related to clinical practice (i.e., the ''program''), identifying university-based teacher preparation programs that require such clinical practice, identifying feasible districts and schools for the study, and finally, confirming eligibility of potential teachers for the study. The Phase I—Recruitment ICR requests approval to collect information from preparation programs about their requirements, focusing on aspects of clinical practice specifically, and to collect preliminary information from teachers about their training to determine their eligibility for the study. This package also provides an overview of the study, including its design and data collection procedures.

Dated: March 27, 2012.

Tomakie Washington,

Acting Director, Information Collection Clearance Division, Privacy, Information and Records Management Services, Office of Management.

[FR Doc. 2012–7733 Filed 3–29–12; 8:45 am]

BILLING CODE 4000–01–P

DEPARTMENT OF EDUCATION

Applications for New Awards; Alaska Native and Native Hawaiian-Serving Institutions (ANNH) Program

AGENCY: Office of Postsecondary Education, Department of Education.

ACTION: Notice.

Overview Information: Alaska Native-Serving and Native Hawaiian-Serving Institutions (ANNH) Program.

Notice inviting applications for new awards for fiscal year (FY) 2012.

Catalog of Federal Domestic Assistance (CFDA) Numbers: 84.031W and 84.031N.

DATES:

Applications Available: March 30, 2012.

Deadline for Transmittal of Applications: April 30, 2012.

Deadline for Intergovernmental Review: June 28, 2012.

Full Text of Announcement

I. Funding Opportunity Description

Purpose of Program: The ANNH program authorized under section 317 of the HEA provides grants to eligible institutions of higher education (IHEs) to enable them to improve and expand their capacity to serve Alaska Natives and Native Hawaiians.

Priorities: This notice contains three competitive preference priorities from the Department's notice of final supplemental priorities and definitions for discretionary grant programs, published in the **Federal Register** on December 15, 2010 (75 FR 78486), and corrected on May 12, 2011 (76 FR 27637).

Competitive Preference Priorities: For FY 2012, and any subsequent year in which we make awards from the list of unfunded applicants from the competition, these priorities are competitive preference priorities. Under 34 CFR 75.105(c)(2)(i), we award up to three points for each competitive preference priority for an additional nine points total to an application, depending on how well the application meets all competitive preference priorities. Applicants must address all competitive preference priorities in order to receive any additional points. Applicants who do not address all three competitive preference priorities will not receive any additional points.

These priorities are:

Competitive Preference Priority 1—Increasing Postsecondary Success.

Projects that are designed to address the following priority area: Increasing the number and proportion of high-need students (as defined in this notice) who persist in and complete college or other postsecondary education and training.

Competitive Preference Priority 2—Enabling More Data-Based Decision-Making.

Projects that are designed to collect (or obtain), analyze, and use high-quality and timely data, including data on program participant outcomes, in accordance with privacy requirements (as defined in this notice), in the following priority area: Improving postsecondary student outcomes relating to enrollment, persistence, and completion and leading to career success.

Competitive Preference Priority 3—Improving Productivity.

Projects that are designed to significantly increase efficiency in the use of time, staff, money, or other resources while improving student learning or other educational outcomes (*i.e.,* outcome per unit of resource). Such projects may include innovative and sustainable uses of technology, modification of school schedules and teacher compensation systems, use of open educational resources (as defined in this notice), or other strategies.

Note: The types of projects identified in Competitive Preference Priority 3 are suggestions for ways to improve productivity. The Department recognizes that some of these examples, such as modification of teacher compensation systems, may not be relevant to this program. Accordingly, applicants should consider responding to this competitive preference priority in a way that improves productivity in a relevant higher education context.

Definitions: The following definitions are from the notice of final supplemental priorities and definitions for discretionary grant programs published in the **Federal Register** on December 15, 2010 (75 FR 78486), and corrected on May 12, 2011 (76 FR 27637), and apply to the priorities in this notice:

High-need children and high-need students means children and students at risk of educational failure, such as children and students who are living in poverty, who are English learners, who are far below grade level or who are not on track to becoming college- or career-ready by graduation, who have left school or college before receiving, respectively, a regular high school diploma or a college degree or certificate, who are at risk of not graduating with a diploma on time, who are homeless, who are in foster care, who are pregnant or parenting teenagers, who have been incarcerated, who are new immigrants, who are migrant, or who have disabilities.

Open educational resources (OER) means teaching, learning, and research resources that reside in the public domain or have been released under an intellectual property license that permits their free use or repurposing by others.

Privacy requirements means the requirements of the Family Educational Rights and Privacy Act (FERPA), 20 U.S.C. 1232g, and its implementing regulations in 34 CFR part 99, the Privacy Act, 5 U.S.C. 552a, as well as all applicable Federal, State, and local requirements regarding privacy.

Program Authority: 20 U.S.C. 1057–1059d and 1067q.

Applicable Regulations: (a) The Education Department General Administrative Regulations (EDGAR) in 34 CFR parts 74, 75, 77, 79, 82, 84, 85, and 86. (b) The regulations for this program in 34 CFR part 607. (c) The notice of final supplemental priorities and definitions for discretionary grant programs, published in the **Federal Register** on December 15, 2010 (75 FR 78486), and corrected on May 12, 2011 (76 FR 27637).

Note: The eligibility criteria for this competition, including the enrollment of needy students and expenditure provisions, are set forth in section III. 1. *Eligible Applicants* of this notice. The tie-breaker provisions are set in section V. 3. *Tie-breaker for Grants* of this notice.

II. Award Information

Type of Award: Individual Development Grants.

Estimated Available Funds: $17,360,518 in funding under Title III, Part F, section 371 of HEA.

Estimated Range of Awards: Up to $2,000,000.

Average Size of Awards: $826,691.

Estimated Number of Awards: 21.

Note: The Department is not bound by any estimates in this notice.

Project Period: Up to 24 months.

III. Eligibility Information

1. *Eligible Applicants:* An IHE that qualifies as an eligible institution under the ANNH programs may apply for grants under this notice. At the time of application, an Alaska Native-Serving Institution must have an enrollment of undergraduate students that is at least 20 percent Alaska Native. 34 CFR 607.2(e). At the time of application, a Native Hawaiian-Serving Institution must have an enrollment of undergraduate students that is at least 10 percent Native Hawaiian. This program is authorized by Title III, Part A of the HEA. To qualify as an eligible institution (see section 312(b) of the HEA), an institution must, among other requirements—

(1) Be accredited or preaccredited by a nationally recognized accrediting agency or association that the Secretary has determined to be a reliable authority as to the quality of education or training offered;

(2) Be legally authorized by the State in which it is located to be a junior college or to provide an educational program for which it awards a bachelor's degree;

(3) Be designated as an ''eligible institution'' by demonstrating that it: (A) Has an enrollment of needy students as described in 34 CFR 607.3; and (B) has low average educational and general expenditures per full-time equivalent (FTE) undergraduate student, as described in 34 CFR 607.4.

Note: For purposes of establishing eligibility for this competition, the Notice Inviting Applications for Designation as Eligible Institutions for FY 2012 was published in the **Federal Register** on December 15, 2011 (76 FR 77982) and the deadline for submission of the designation of eligibility application was February 10, 2012. Awards under this competition are available only to institutions that established eligibility through an Application for Designation as Eligible Institutions for FY 2012.

Relationship Between the Title III, Part A and Part F Programs and the Hispanic-Serving Institutions (HSI) Program

Note 1: A grantee under the HSI Program, which is authorized under Title V of the HEA, may not receive a grant under any HEA, Title III, Part A or Part F program, including the Alaska Native-Serving and Native Hawaiian-Serving Institutions Programs (ANNH). Further, a current HSI Program grantee may not give up its HSI grant in order to receive a grant under any Title III, Part A or Part F program.

Note 2: An eligible HSI that does not fall within the limitation described in Note 1 (i.e., is not a current grantee under the HSI Program) may apply for a FY 2012 grant under all Title III, Part A and Part F programs for which it is eligible, as well as receive consideration for a grant under the HSI Program. However, a successful applicant may receive only one grant.

2.a. *Cost Sharing or Matching:* This program does not require cost sharing or matching.

b. *Supplement-Not-Supplant:* This program involves supplement-not-supplant funding requirements. Grant funds shall be used so that they supplement and, to the extent practical, increase the funds that would otherwise be available for the activities to be carried out under the grant and in no case supplant those funds (34 CFR 607.30 (b)).

IV. Application and Submission Information

1. *Address to Request Application Package:* You can obtain an application via the Internet using the following address: *http://Grants.gov.* If you do not have access to the Internet, please contact Kelley Harris, U.S. Department of Education, 1990 K Street NW., Room 6033, Washington, DC 20006–8513. Telephone: (202) 219–7083; or, by email: *Kelley.Harris@ed.gov.*

If you use a telecommunications device for the deaf (TDD) or a text telephone (TTY), call the Federal Relay Service (FRS), toll free, at 1–800–877–8339.

Individuals with disabilities can obtain a copy of the application package in an accessible format (e.g., braille, large print, audiotape, or compact disc) by contacting the program contact person listed in this section.

2. *Content and Form of Application Submission:* Requirements concerning the content of an application, together with the forms you must submit, are in the application package for this program.

Page Limits: The application narrative (Part III of the application) is where you, the applicant, address the selection criteria and the competitive priorities that reviewers use to evaluate your application. We have established mandatory page limits for the Individual Development Grant applications. You must limit the application narrative (Part III) to no more than 55 pages for the Individual Development Grant application.

Note: Please include a separate heading when responding to the competitive priorities. If you are not addressing the competitive priorities, you must limit your application narrative to no more than 50 pages for the Individual Development Grant.

- A ''page'' is 8.5″ x 11″, on one side only, with 1'' margins at the top, bottom, and both sides. Page numbers and an identifier may be outside the 1″ margin.
- Double space (no more than three lines per vertical inch) all text in the application narrative, *except* titles, headings, footnotes, quotations, references, captions and all text in charts, tables, figures, and graphs. Charts, tables, figures, and graphs in the application narrative may be single spaced and will count toward the page limit.
- Use a font that is either 12 point or larger, and no smaller than 10 pitch (characters per inch).
- Use one of the following fonts: Times New Roman, Courier, Courier New, or Arial. An applications submitted in any other font (including Times Roman and Arial Narrow) will not be accepted.

The page limit does not apply to Part I, the Application for Federal Assistance (SF–424); the Supplemental Information for SF–424 Form required by the Department of Education; Part II, the Budget section, Budget Information Non-Construction Programs (ED 524), including the narrative budget justification; Part IV, the assurances and certifications; or the one-page program abstract, the resumes, the bibliography, or the letters of support. However, the page limit does apply to all of the application narrative section (Part III), including the budget narrative of the selection criteria and the competitive priorities. If you include any attachments or appendices not specifically requested in the application package, these items will be counted as part of your application narrative (Part III) for the purpose of the page limit requirement. You must include your complete response to the selection criteria in the application narrative.

Note: The narrative response to the budget selection criteria is not the same as the activity detail budget form and supporting narrative. The supporting narrative for the activity detail budget form lists the requested budget line items line by line.

We will reject your application if you exceed the page limit.

3. *Submission Dates and Times:*

Applications Available: March 30, 2012.

Deadline for Transmittal of Applications: April 30, 2012.

Applications for grants under this competition must be submitted electronically using the Grants.gov Apply site (Grants.gov). For information (including dates and times) about how to submit your application electronically, or in paper format by mail or hand delivery if you qualify for an exception to the electronic submission requirement, please refer to section IV. 7. *Other Submission Requirements* of this notice.

We do not consider an application that does not comply with the deadline requirements.

Individuals with disabilities who need an accommodation or auxiliary aid in connection with the application process should contact the person listed under **FOR FURTHER INFORMATION CONTACT** in section VII of this notice. If the Department provides an accommodation or auxiliary aid to an individual with a disability in connection with the application process, the individual's application remains subject to all other requirements and limitations in this notice.

Deadline for Intergovernmental Review: June 28, 2012.

4. *Intergovernmental Review:* This program is subject to Executive Order

12372 and the regulations in 34 CFR part 79. Information about Intergovernmental Review of Federal Programs under Executive Order 12372 is in the application package for these programs.

5. *Funding Restrictions:* We specify limitations on allowable costs in 34 CFR 607.30. We reference additional regulations outlining funding restrictions in the *Applicable Regulations* section of this notice.

Applicability of Executive Order 13202. Applicants that apply for construction funds under the Title III, Part A programs, must comply with Executive Order 13202 signed by former President George W. Bush on February 17, 2001, and amended on April 6, 2001. This Executive Order provides that recipients of Federal construction funds may not ''require or prohibit bidders, offerors, contractors, or subcontractors to enter into or adhere to agreements with one or more labor organizations, on the same or other construction project(s)'' or ''otherwise discriminate against bidders, offerors, contractors, or subcontractors for becoming or refusing to become or remain signatories or otherwise adhere to agreements with one or more labor organizations, on the same or other construction project(s).'' However, the Executive Order does not prohibit contractors or subcontractors from voluntarily entering into these agreements. Projects funded under these programs that include construction activity will be provided a copy of this Executive Order and will be asked to certify that they will adhere to it.

6. *Data Universal Numbering System Number, Taxpayer Identification Number, and Central Contractor Registry:* To do business with the Department of Education, you must—

a. Have a Data Universal Numbering System (DUNS) number and a Taxpayer Identification Number (TIN);

b. Register both your DUNS number and TIN with the Central Contractor Registry (CCR), the Government's primary registrant database;

c. Provide your DUNS number and TIN on your application; and

d. Maintain an active CCR registration with current information while your application is under review by the Department and, if you are awarded a grant, during the project period.

You can obtain a DUNS number from Dun and Bradstreet. A DUNS number can be created within one business day.

If you are a corporate entity, agency, institution, or organization, you can obtain a TIN from the Internal Revenue Service. If you are an individual, you can obtain a TIN from the Internal Revenue Service or the Social Security Administration. If you need a new TIN, please allow two to five weeks for your TIN to become active.

The CCR registration process may take five or more business days to complete. If you are currently registered with the CCR, you may not need to make any changes. However, please make certain that the TIN associated with your DUNS number is correct. Also note that you will need to update your CCR registration on an annual basis. This may take three or more business days to complete. In addition, if you are submitting your application via Grants.gov, you must (1) be designated by your organization as an Authorized Organization Representative (AOR); and (2) register yourself with Grants.gov as an AOR. Details on these steps are outlined at the following Grants.gov Web page: *www.grants.gov/applicants/get_registered.jsp*).

7. *Other Submission Requirements:* Applications for grants under the ANNH programs must be submitted electronically unless you qualify for an exception to this requirement in accordance with the instructions in this section.

a. *Electronic Submission of Applications.*

Applications for grants under the Alaska Native-Serving Institutions Program (CFDA number 84.031N) and the Native Hawaiian-Serving Institutions Program (CFDA number 84.031W) must be submitted electronically using the Governmentwide Grants.gov Apply site at *www.grants.gov.* Through this site, you will be able to download a copy of the application package, complete it offline, and then upload and submit your application. You may not email an electronic copy of a grant application to us.

We will reject your application if you submit it in paper format unless, as described elsewhere in this section, you qualify for one of the exceptions to the electronic submission requirement *and* submit, no later than two weeks before the application deadline date, a written statement to the Department that you qualify for one of these exceptions. Further information regarding calculation of the date that is two weeks before the application deadline date is provided later in this section under *Exception to Electronic Submission Requirement.*

You may access the electronic grant application for this competition at *www.Grants.gov.* You must search for the downloadable application package for this program by the CFDA number. Do not include the CFDA number's alpha suffix in your search (e.g., search for 84.031, not 84.031N).

Please note the following:

- When you enter the Grants.gov site, you will find information about submitting an application electronically through the site, as well as the hours of operation.
- Applications received by Grants.gov are date and time stamped. Your application must be fully uploaded and submitted and must be date and time stamped by the Grants.gov system no later than 4:30 p.m., Washington, DC time, on the application deadline date. Except as otherwise noted in this section, we will not accept your application if it is received—that is, date and time stamped by the Grants.gov system—after 4:30 p.m., Washington, DC time, on the application deadline date. We do not consider an application that does not comply with the deadline requirements. When we retrieve your application from Grants.gov, we will notify you if we are rejecting your application because it was date and time stamped by the Grants.gov system after 4:30 p.m., Washington, DC time, on the application deadline date.
- The amount of time it can take to upload an application will vary depending on a variety of factors, including the size of the application and the speed of your Internet connection. Therefore, we strongly recommend that you do not wait until the application deadline date to begin the submission process through Grants.gov.
- You should review and follow the Education Submission Procedures for submitting an application through Grants.gov that are included in the application package for this competition to ensure that you submit your application in a timely manner to the Grants.gov system. You can also find the Education Submission Procedures pertaining to Grants.gov under News and Events on the Department's G5 system home page at *http://www.G5.gov.*
- You will not receive additional point value because you submit your application in electronic format, nor will we penalize you if you qualify for an exception to the electronic submission requirement, as described elsewhere in this section, and submit your application in paper format.
- You must submit all documents electronically, including all information you typically provide on the following forms: The Application for Federal Assistance (SF 424), the Department of Education Supplemental Information for SF 424, Budget Information—Non-Construction Programs (ED 524), and all necessary assurances and certifications.

• You must upload any narrative sections and all other attachments to your application as files in a PDF (Portable Document) read-only, non-modifiable format. Do not upload an interactive or fillable PDF file. If you upload a file type other than a read-only, non-modifiable PDF or submit a password-protected file, we will not review that material.

• Your electronic application must comply with any page-limit requirements described in this notice.

• After you electronically submit your application, you will receive from Grants.gov an automatic notification of receipt that contains a Grants.gov tracking number. (This notification indicates receipt by Grants.gov only, not receipt by the Department.) The Department then will retrieve your application from Grants.gov and send a second notification to you by email. This second notification indicates that the Department has received your application and has assigned your application a PR/Award number (an ED-specified identifying number unique to your application).

• We may request that you provide us original signatures on forms at a later date.

Application Deadline Date Extension in Case of Technical Issues With the Grants.gov System: If you are experiencing problems submitting your application through Grants.gov, please contact the Grants.gov Support Desk, toll free, at 1–800–518–4726. You must obtain a Grants.gov Support Desk Case Number and must keep a record of it.

If you are prevented from electronically submitting your application on the application deadline date because of technical problems with the Grants.gov system, we will grant you an extension until 4:30:00 p.m., Washington, DC time, the following business day to enable you to transmit your application electronically or by hand delivery. You also may mail your application by following the mailing instructions described elsewhere in this notice.

If you submit an application after 4:30:00 p.m., Washington, DC time, on the application deadline date, please contact the person listed under **FOR FURTHER INFORMATION CONTACT** in section VII of this notice and provide an explanation of the technical problem you experienced with Grants.gov, along with the Grants.gov Support Desk Case Number. We will accept your application if we can confirm that a technical problem occurred with the Grants.gov system and that that problem affected your ability to submit your application by 4:30:00 p.m., Washington, DC time, on the application deadline date. The Department will contact you after a determination is made on whether your application will be accepted.

Note: The extensions to which we refer in this section apply only to the unavailability of, or technical problems with, the Grants.gov system. We will not grant you an extension if you failed to fully register to submit your application to Grants.gov before the application deadline date and time or if the technical problem you experienced is unrelated to the Grants.gov system.

Exception to Electronic Submission Requirement: You qualify for an exception to the electronic submission requirement, and may submit your application in paper format, if you are unable to submit an application through the Grants.gov system because—

• You do not have access to the Internet; or

• You do not have the capacity to upload large documents to the Grants.gov system;

and

• No later than two weeks before the application deadline date (14 calendar days or, if the fourteenth calendar day before the application deadline date falls on a Federal holiday, the next business day following the Federal holiday), you mail or fax a written statement to the Department, explaining which of the two grounds for an exception prevent you from using the Internet to submit your application.

If you mail your written statement to the Department, it must be postmarked no later than two weeks before the application deadline date. If you fax your written statement to the Department, we must receive the faxed statement no later than two weeks before the application deadline date.

Address and mail or fax your statement to: Kelley Harris, U.S. Department of Education, 1990 K Street NW., Room 6033, Washington, DC 20006–8513. FAX: (202) 502–7861.

Your paper application must be submitted in accordance with the mail or hand delivery instructions described in this notice.

b. *Submission of Paper Applications by Mail.*

If you qualify for an exception to the electronic submission requirement, you may mail (through the U.S. Postal Service or a commercial carrier) your application to the Department. You must mail the original and two copies of your application, on or before the application deadline date, to the Department at the following address: U.S. Department of Education, Application Control Center, Attention: (CFDA Number 84.031N or 84.031W), 400 Maryland Avenue SW., Washington, DC 20202–4260.

You must show proof of mailing consisting of one of the following:

(1) A legibly dated U.S. Postal Service postmark.

(2) A legible mail receipt with the date of mailing stamped by the U.S. Postal Service.

(3) A dated shipping label, invoice, or receipt from a commercial carrier.

(4) Any other proof of mailing acceptable to the Secretary of the U.S. Department of Education.

If you mail your application through the U.S. Postal Service, we do not accept either of the following as proof of mailing:

(1) A private metered postmark.

(2) A mail receipt that is not dated by the U.S. Postal Service.

If your application is postmarked after the application deadline date, we will not consider your application.

Note: The U.S. Postal Service does not uniformly provide a dated postmark. Before relying on this method, you should check with your local post office.

c. *Submission of Paper Applications by Hand Delivery.*

If you qualify for an exception to the electronic submission requirement, you (or a courier service) may deliver your paper application to the Department by hand. You must deliver the original and two copies of your application, by hand, on or before the application deadline date, to the Department at the following address: U.S. Department of Education, Application Control Center, Attention: (CFDA Number 84.031N or 84.031W), 550 12th Street SW., Room 7041, Potomac Center Plaza, Washington, DC 20202–4260.

The Application Control Center accepts hand deliveries daily between 8 a.m. and 4:30:00 p.m., Washington, DC time, except Saturdays, Sundays, and Federal holidays.

Note for Mail or Hand Delivery of Paper Applications: If you mail or hand deliver your application to the Department—

(1) You must indicate on the envelope and—if not provided by the Department—in Item 11 of the SF 424 the CFDA number, including suffix letter, if any, of the competition under which you are submitting your application; and

(2) The Application Control Center will mail to you a notification of receipt of your grant application. If you do not receive this notification within 15 business days from the application deadline date, you should call the U.S. Department of Education Application Control Center at (202) 245–6288.

V. Application Review Information

1. *Selection Criteria:* The selection criteria for these programs are in 34 CFR

607.22(a)–(g). Applicants must address each of the following selection criteria (separately for each proposed activity). The total weight of the selection criteria is 100 points; the maximum score for each criterion is noted in parentheses.

(a) Quality of the Applicant's Comprehensive Development Plan (Maximum 25 Points).

(b) Quality of Activity Objectives (Maximum 15 Points).

(c) Quality of Implementation Strategy (Maximum 20 Points).

(d) Quality of Key Personnel (Maximum 7 Points).

(e) Quality of Project Management Plan (Maximum 10 Points).

(f) Quality of Evaluation Plan (Maximum 15 Points).

(g) Budget (Maximum 8 Points).

2. *Review and Selection Process:* Awards will be made in rank order according to the average score received from a panel of three readers.

Tie-Breaker for Development Grants. In tie-breaking situations for development grants, 34 CFR 607.23(b) requires that additional points be awarded to any applicants that: (1) Have an endowment fund of which the current market value, per full-time equivalent (FTE) enrolled student, is less than the average current market value of the endowment funds, per FTE enrolled student at comparable institutions that offer similar instruction; (2) have expenditures for library materials per FTE enrolled student that are less than the average expenditures per FTE enrolled student at comparable institutions that offer similar instruction; or (3) that propose to carry out one or more of the following activities—

(1) Faculty development;

(2) Funds and administrative management;

(3) Development and improvement of academic programs;

(4) Acquisition of equipment for use in strengthening management and academic programs;

(5) Joint use of facilities; and

(6) Student services.

For the purpose of these funding considerations, we use 2009–2010 data.

If a tie remains after applying the tie-breaker mechanism above, priority will be given in the case of applicants for: (a) Individual development grants to applicants that have the lowest endowment values per FTE student; and (b) cooperative arrangement development grants to applicants in accordance with section 394(b) of the HEA, if the Secretary determines that the cooperative arrangement is geographically and economically sound or will benefit the applicant institution.

3. *Special Conditions:* Under 34 CFR 74.14, 80.12, the Secretary may impose special conditions on a grant if the applicant or grantee is not financially stable; has a history of unsatisfactory performance; has a financial or other management system that does not meet the standards in 34 CFR parts 74 or 80, as applicable; has not fulfilled the conditions of a prior grant (34 CFR 607.24); or, is otherwise not responsible.

VI. Award Administration Information

1. *Award Notices:* If your application is successful, we notify your U.S. Representative and U.S. Senators and send you a Grant Award Notification (GAN). We may also notify you informally.

If your application is not evaluated or not selected for funding, we notify you.

2. *Administrative and National Policy Requirements:* We identify administrative and national policy requirements in the application package and reference these and other requirements in the *Applicable Regulations* section in this notice.

We reference the regulations outlining the terms and conditions of an award in the *Applicable Regulations* section of this notice and include these and other specific conditions in the GAN. The GAN also incorporates your approved application as part of your binding commitments under the grant.

3. *Reporting:* (a) If you apply for a grant under this competition, you must ensure that you have in place the necessary processes and systems to comply with the reporting requirements in 2 CFR part 170 should you receive funding under the competition. This does not apply if you have an exception under 2 CFR 170.110(b).

(b) At the end of your project period, you must submit a final performance report, including financial information, as directed by the Secretary. If you receive a multi-year award, you must submit an annual performance report that provides the most current performance and financial expenditure information as directed by the Secretary in 34 CFR 75.118 and 34 CFR 607.31. The Secretary may also require more frequent performance reports under 34 CFR 75.720(c). For specific requirements on reporting, please go to *www.ed.gov/fund/grant/apply/appforms/appforms.html.*

4. *Performance Measures:* The Secretary has established the following key performance measures for assessing the effectiveness of the Strengthening Alaska Native and Native Hawaiian-Serving Institutions Programs:

a. The percentage change, over the five-year period, of the number of full-time degree-seeking undergraduates enrolled at Alaska Native and Native Hawaiian-Serving Institutions. Note that this is a long-term measure, which will be used to periodically gauge performance, beginning in FY 2009.

b. The percentage of first-time, full-time degree-seeking undergraduate students at 4-year Alaska Native and Native Hawaiian-Serving Institutions who were in their first year of postsecondary enrollment in the previous year and are enrolled in the current year at the same Alaska Native and Native Hawaiian-Serving Institution;

c. The percentage of first-time, full-time degree-seeking undergraduate students at 2-year Alaska Native and Native Hawaiian-Serving Institutions who were in their first year of postsecondary enrollment in the previous year and are enrolled in the current year at the same Alaska Native and Native Hawaiian-Serving Institution;

d. The percentage of first-time, full-time degree-seeking undergraduate students enrolled at 4-year Alaska Native and Native Hawaiian-Serving Institutions graduating within 6 years of enrollment; and

e. The percentage of first-time, full-time degree seeking undergraduate students enrolled at 2-year Alaska Native and Native Hawaiian-Serving Institutions graduating within 3 years of enrollment.

5. *Continuation Awards:* In making a continuation award, the Secretary may consider, under 34 CFR 607.31, the extent to which a grantee has made ''substantial progress toward achieving the objectives set forth in its grant application, including, if applicable, the institution's success in institutionalizing practices and improvements developed under the grant.'' This consideration includes the review of a grantee's progress in meeting the targets and projected outcomes in its approved application, and whether the grantee has expended funds in a manner that is consistent with its approved application and budget. In making a continuation grant, the Secretary also considers whether the grantee is operating in compliance with the assurances in its approved application, including those applicable to Federal civil rights laws that prohibit discrimination in programs or activities receiving Federal financial assistance from the Department (34 CFR 100.4, 104.5, 106.4, 108.8, and 110.23).

VII. Agency Contacts

FOR FURTHER INFORMATION CONTACT: Kelley Harris, U.S. Department of

Education, 1990 K Street NW., Room 6033, Washington, DC 20006–8513. Telephone: (202) 219–7083; or, by email: *Kelley.Harris@ed.gov*.

If you use a TDD or a TTY, call the FRS, toll free, at 1–800–877–8339.

VIII. Other Information

Accessible Format: Individuals with disabilities can obtain this document and a copy of the application package in an accessible format (e.g., braille, large print, audiotape, or compact disc) on request to the program contact person listed under **FOR FURTHER INFORMATION CONTACT** in section VII of this notice.

Electronic Access to This Document: The official version of this document is the document published in the **Federal Register**. Free Internet access to the official edition of the **Federal Register** and the Code of Federal Regulations is available via the Federal Digital System at: *www.gpo.gov/fdsys.* At this site you can view this document, as well as all other documents of this Department published in the **Federal Register**, in text or Adobe Portable Document Format (PDF). To use PDF, you must have Adobe Acrobat Reader, which is available free at this site.

You may also access documents of the Department published in the **Federal Register** by using the article search feature at: *www.federalregister.gov*. Specifically through the advanced search feature at this site, you can limit your search to documents published by the Department.

Delegation of Authority: The Secretary of Education has delegated authority to David Bergeron, Deputy Assistant Secretary for Policy, Planning, and Innovation to perform the functions and duties of the Assistant Secretary for Postsecondary Education.

Dated: March 26, 2012.

David Bergeron,

Deputy Assistant Secretary for Policy, Planning, and Innovation, delegated the authority to perform the functions and duties of the Assistant Secretary for Postsecondary Education.

[FR Doc. 2012–7716 Filed 3–29–12; 8:45 am]

BILLING CODE 4000–01–P

DEPARTMENT OF EDUCATION

National Advisory Committee on Institutional Quality and Integrity (NACIQI)

AGENCY: U.S. Department of Education, Office of Postsecondary Education, National Advisory Committee on Institutional Quality and Integrity.

ACTION: Announcement of an open meeting of the National Advisory Committee on Institutional Quality and Integrity (NACIQI) and information pertaining to members of the public submitting third-party written and oral comments.

ADDRESSES: U.S. Department of Education, Office of Postsecondary Education, 1990 K Street NW., Room 8072, Washington, DC 20006.

NACIQI'S Statutory Authority and Function: The NACIQI is established under Section 114 of the HEA of 1965, as amended, 20 U.S.C. 1011c. The NACIQI advises the Secretary of Education about:

- The establishment and enforcement of the criteria for recognition of accrediting agencies or associations under Subpart 2, Part H, Title IV, of the HEA, as amended.
- The recognition of specific accrediting agencies or associations or a specific State approval agency.
- The preparation and publication of the list of nationally recognized accrediting agencies and associations
- The eligibility and certification process for institutions of higher education under Title IV, of the HEA, together with recommendations for improvement in such process.
- The relationship between (1) accreditation of institutions of higher education and the certification and eligibility of such institutions, and (2) State licensing responsibilities with respect to such institutions.
- Any other advisory function relating to accreditation and institutional eligibility that the Secretary may prescribe.

SUMMARY: This notice sets forth the agenda for the June 25–26, 2012, meeting of the National Advisory Committee on Institutional Quality and Integrity (NACIQI); and provides information to members of the public on submitting written comments and on requesting to make oral comments at the meeting. The notice of this meeting is required under Section 10(a)(2) of the Federal Advisory Committee Act (FACA) and Section 114(d)(1)(B) of the Higher Education Act (HEA) of 1965, as amended.

Meeting Date and Place: The NACIQI meeting will be held on June 25–26, 2012, from approximately 8:30 a.m. to approximately 5:30 p.m. at the Westin Alexandria, 400 Courthouse Square, Alexandria, VA 22314.

Meeting Agenda: Below is a list of agencies, including their current and requested scopes of recognition, scheduled for review during the June 25–26, 2012, meeting:

Petitions for Renewal of Recognition

Accrediting Agencies

1. The Association for Biblical Higher Education (ABHE), Commission on Accreditation (Current Scope: The accreditation and preaccreditation (''Candidate for Accreditation'') of Bible colleges and institutes in the United States offering undergraduate programs through both campus-based instruction and distance education.) Requested Scope: The preaccreditation and accreditation of institutions of biblical higher education in the United States offering undergraduate and graduate programs (including master's, first professional, and doctoral degrees) through campus-based instruction and distance education; and the accreditation of undergraduate and graduate programs of biblical and ministerial education offered in nationally or regionally accredited institutions whose overall mission and curricula are compatible with ABHE's purpose and membership standards, via campus-based and distance education.

2. Accreditation Commission for Midwifery Education (Current Scope: The accreditation and pre-accreditation of basic certificate, basic graduate nurse-midwifery, direct entry midwifery, and pre-certification nurse-midwifery education programs. The accreditation and pre-accreditation of freestanding institutions of midwifery education that may offer other related health care programs to include nurse practitioner programs, and including those institutions and programs that offer distance education.) Requested Scope: The accreditation and pre-accreditation of basic certificate, basic graduate nurse-midwifery, direct entry midwifery, and pre-certification nurse-midwifery education programs.

3. Accreditation Council for Pharmacy Education (Current Scope: The accreditation and preaccreditation of professional degree programs in pharmacy leading to the degree of Doctor of Pharmacy.)

4. Association for Clinical Pastoral Education, Inc., Accreditation Commission (Current Scope: The accreditation of both clinical pastoral education (CPE) centers and CPE and Supervisory CPE programs located within the United States and territories.)

5. American Dental Association, Commission on Dental Accreditation (Current Scope: The accreditation of predoctoral dental education programs (leading to the D.D.S. or D.M.D. degree), advanced dental education programs, and allied dental education programs that are fully operational or have attained ''Initial Accreditation'' status,

including programs offered via distance education.)

6. American Occupational Therapy Association, Accreditation Council for Occupational Therapy Education (Current Scope: The accreditation of occupational therapy education programs offering the professional master's degree, combined baccalaureate/master's degree, and occupational therapy doctorate (OTD) degree; the accreditation of occupational therapy assistant programs offering the associate degree or a certificate; and the accreditation of these programs offered via distance education.)

7. Commission on Collegiate Nursing Education (Current Scope: The accreditation of nursing education programs in the United States, at the baccalaureate and graduate degree levels, including programs offering distance education.) Requested Scope: The accreditation of nursing education programs in the United States, at the baccalaureate, master's, and doctoral levels, including programs offering distance education.

8. Middle States Commission on Secondary Schools (Current Scope: The accreditation of institutions with postsecondary, non-degree granting career and technology programs in Delaware, Maryland, New Jersey, New York, Pennsylvania, the Commonwealth of Puerto Rico, the District of Columbia, and the U.S. Virgin Islands including those that offer all or part of their educational programs via distance education modalities.)

9. Distance Education and Training Council, Accrediting Commission (Current Scope: The accreditation of postsecondary institutions in the United States that offer degree programs primarily by the distance education method up to and including the professional doctoral degree, and are specifically certified by the agency as accredited for Title IV purposes; and for the accreditation of postsecondary institutions in the United States not participating in Title IV that offer programs primarily by the distance education method up through the professional doctoral degree.)

10. National League for Nursing Accrediting Commission (Current Scope: The accreditation in the United States of programs in practical nursing, and diploma, associate, baccalaureate and higher degree nurse education programs, including those offered via distance education.) Requested Scope: Accreditation of nursing education programs and schools, both postsecondary and higher degree, which offer either a certificate, diploma, or a recognized professional degree including clinical doctorate, master's, baccalaureate, associate, diploma, and practical nursing programs in the United States and its territories, including those offered via distance education.

11. Southern Association of Colleges and Schools (SACS), Commission on Colleges (COC) (Current Scope: The accreditation and preaccreditation (''Candidate for Accreditation'') of degree-granting institutions of higher education in Alabama, Florida, Georgia, Kentucky, Louisiana, Mississippi, North Carolina, South Carolina, Tennessee, Texas, and Virginia, including distance education programs offered at those institutions). Requested Scope: The accreditation and preaccreditation (''Candidate for Accreditation'') of degree-granting institutions of higher education in Alabama, Florida, Georgia, Kentucky, Louisiana, Mississippi, North Carolina, South Carolina, Tennessee, Texas, and Virginia, including the accreditation of programs offered via distance and correspondence education within these institutions. This recognition extends to the SACS–COC Board of Trustees and the Appeals Committee of the College Delegate Assembly on cases of initial candidacy or initial accreditation and for continued accreditation or candidacy.

State Approval Agency for Public Postsecondary Vocational Education

1. Puerto Rico State Agency for the Approval of Public Postsecondary Vocational, Technical Institutions and Programs (Current Scope: Recognition as the State agency for the approval of public postsecondary vocational technical education in the Commonwealth of Puerto Rico).

Compliance Reports

1. American Speech-Language-Hearing Association, Council on Academic Accreditation in Audiology and Speech-Language Pathology (Current Scope: The accreditation and preaccreditation (Accreditation Candidate) throughout the United States of education programs in audiology and speech-language pathology leading to the first professional or clinical degree at the master's or doctoral level, and the accreditation of these programs offered via distance education.

2. National Accrediting Commission of Career Arts and Sciences, Inc. (Current Scope: The accreditation throughout the United States of postsecondary schools and departments of cosmetology arts and sciences and massage therapy).

Request for Degree-Granting Authority

In accordance with the ''Federal Policy Governing the Granting of Academic Degrees by Federal Agencies'' (approved by a letter from the Director, Bureau of the Budget, to the Secretary, Health, Education, and Welfare, dated December 23, 1954), the Secretary is required to establish a review committee to advise the Secretary concerning any legislation that may be proposed that would authorize the granting of degrees by a Federal agency. After considering the criteria established by the policy, the review committee forwards its recommendation concerning a Federal agency's proposed degree-granting authority to the Secretary, who then forwards the committee's recommendation and the Secretary's recommendation to the Office of Management and Budget and the Department of Defense. The Secretary uses the NACIQI as the review committee required for this purpose. Accordingly, the Advisory Committee will review the following request:

1. Under the authority of Department of Defense Instruction DODI–3305.01, dated December 22, 2006, incorporating change 1 of February 9, 2011, the National Intelligence University, Bolling Air Force Base, requests degree-granting authority to award a Master's of Science and Technology Intelligence degree.

Submission of Written Comments: Written comments must be received by April 16, 2012, in the *accreditationcommittees@ed.gov* mailbox and include the subject line ''Written Comments: re (agency name).'' The email must include the name, title, affiliation, mailing address, email address, telephone and facsimile numbers and Web site (if any) of the person/group making the comment. Comments should be submitted as a Microsoft Word document or in a medium compatible with Microsoft Word (not a PDF file) that is attached to an electronic mail message (email) or provided in the body of an email message. Comments about an agency's compliance report must relate to the issues raised and the criteria for recognition cited in the Secretary's letter that requested the report. Comments about an agency's renewal of recognition must relate to its compliance with the Criteria for the Recognition of Accrediting Agencies or the Criteria and Procedures for Recognition of State Agencies for Approval of Public Postsecondary Vocational Education, as appropriate, which are available at *http://www.ed.gov/admins/finaid/accred/index.html.* Third parties having

concerns about agencies regarding matters outside the scope of the petition should report those concerns to Department staff. Only material submitted by the deadline to the email address listed in this notice, and in accordance with these instructions, become part of the official record concerning agencies scheduled for review and are considered by the Department and the NACIQI in their deliberations. Please do not send material directly to the NACIQI members.

Submission of Requests To Make An Oral Comment: There are two methods the public may use to make a third-party oral comment of three to five minutes concerning one of the agencies scheduled for review on June 25–26, 2012. Oral comments about agencies seeking continued recognition must relate to the criteria for the recognition of accrediting agencies or the Criteria and Procedures for Recognition of State Agencies for Approval of Public Postsecondary Vocational Education, as appropriate, which are available at: *http://www.ed.gov/admins/finaid/accred/index.html.*

Method One: Submit a request by email to the *accreditationcommittees@ed.gov* mailbox. Please do not send material directly to NACIQI members. Requests must be received by April 16, 2012, and include the subject line ''Oral Comment Request: re (agency name).'' The email must include the name, title, affiliation, mailing address, email address, telephone and facsimile numbers and Web site (if any) of the person/group requesting to speak. All individuals or groups submitting an advance request in accordance with this notice will be afforded an opportunity to speak for a minimum of three minutes each. Each request must concern the recognition of a single agency or institution tentatively scheduled in this notice for review, be no more than one page (maximum), and must include:

1. The name, title, affiliation, mailing address, email address, telephone and facsimile numbers, and Web site (if any) of the person/group requesting to speak; and,

2. A brief summary of the principal points to be made during the oral presentation.

Method Two: Register at the meeting location on June 25 or June 26, 2012, to make an oral comment during the NACIQI's deliberations concerning a particular agency or institution scheduled for review that day. The requestor must provide his or her name, title, affiliation, mailing address, email address, telephone and facsimile numbers, and Web site (if any). A total of up to fifteen minutes during each agency review will be allotted for commenters who register on June 25 or June 26, 2012. Individuals or groups will be selected on a first-come, first-served basis. If selected, each commenter may speak from three to five minutes, depending on the number of individuals or groups who signed up the day of the meeting.

If a person or group requests to make comments in advance, they cannot also register for an oral presentation opportunity on June 25 or June 26, 2012. The oral comments made will become part of the official record and will be considered by the Department and NACIQI in their deliberations. Individuals and groups making oral presentations concerning scheduled agencies may not distribute written materials at the meeting.

Access to Records of the Meeting: The Department will post the official report of the meeting on the NACIQI Web site shortly after the meeting. Pursuant to the FACA, the public may also inspect the materials at 1990 K Street NW., Washington, DC, by emailing *aslrecordsmanager@ed.gov* or by calling (202) 219–7067 to schedule an appointment.

Reasonable Accommodations: The meeting site is accessible to individuals with disabilities. If you will need an auxiliary aid or service to participate in the meeting (e.g., interpreting service, assistive listening device, or materials in an alternate format), notify the contact person listed in this notice at least two weeks before the scheduled meeting date. Although we will attempt to meet a request received after that date, we may not be able to make available the requested auxiliary aid or service because of insufficient time to arrange it.

FOR FURTHER INFORMATION CONTACT: Carol Griffiths, Acting Executive Director, NACIQI, U.S. Department of Education, 1990 K Street NW., Room 8072, Washington, DC 20006–8129, telephone: (202) 219–7035, fax: (202) 219–7005, or email: *Carol.Griffiths@ed.gov*.

Electronic Access to this Document: The official version of this document is the document published in the **Federal Register**. Free Internet access to the official edition of the **Federal Register** and the Code of Federal Regulations is available via the Federal Digital System at: *www.gpo.gov/fdsys.* At this site you can view this document, as well as all other documents of this Department published in the **Federal Register**, in text or Adobe Portable Document Format (PDF). To use PDF, you must have Adobe Acrobat Reader, which is available free at the site.

You may also access documents of the Department published in the **Federal Register** by using the article search feature at: *www.federalregister.gov.* Specifically, through the advanced search feature at this site, you can limit your search to documents published by the Department.

Delegation of Authority: The Secretary of Education has delegated authority to David Bergeron, Deputy Assistant Secretary for Policy, Planning, and Innovation to perform the functions and duties of the Assistant Secretary for Postsecondary Education.

David Bergeron,

Deputy Assistant Secretary for Policy, Planning, and Innovation, delegated the authority to perform the functions and duties of the Assistant Secretary for Postsecondary Education.

[FR Doc. 2012–7725 Filed 3–29–12; 8:45 am]

BILLING CODE P

DEPARTMENT OF ENERGY

Proposed Agency Information Collection

AGENCY: U.S. Department of Energy, DoE.

ACTION: Notice and Request for Comments.

SUMMARY: The Department of Energy (DOE) invites public comment on a proposed collection of information that DOE is developing for submission to the Office of Management and Budget (OMB) pursuant to the Paperwork Reduction Act of 1995. Comments are invited on: (a) Whether the proposed collection of information is necessary for the proper performance of the functions of the agency, including whether the information shall have practical utility; (b) the accuracy of the agency's estimate of the burden of the proposed collection of information, including the validity of the methodology and assumptions used; (c) ways to enhance the quality, utility, and clarity of the information to be collected; and (d) ways to minimize the burden of the collection of information on respondents, including through the use of automated collection techniques or other forms of information technology.

The proposed collection would involve information for a scorecard that would assist DOE's Clean Cities Coalitions and stakeholders in assessing the level of readiness of their communities for plug-in electric

vehicles. Information collected would allow DOE to provide respondents with an objective assessment of their communities' readiness for PEV adoption and an understanding of their commitment to successful deployment of PEVs, and is needed to ensure appropriate evaluation of progress in deploying PEVs.

DATES: Comments regarding this proposed information collection must be received on or before May 29, 2012. If you anticipate difficulty in submitting comments within that period, contact the person listed in **ADDRESSES** as soon as possible.

ADDRESSES: Written comments may be sent to Ms. Linda Bluestein, Office of Energy Efficiency and Renewable Energy (EE–2G), U.S. Department of Energy, 1000 Independence Avenue SW., Washington, DC 20585–0121, or by fax at 202–586–1600, or by email at *Linda.Bluestein@ee.doe.gov*.

FOR FURTHER INFORMATION CONTACT: Requests for additional information or copies of the information collection instrument and instructions should be directed to Ms. Linda Bluestein, Office of Energy Efficiency and Renewable Energy (EE–2G), U.S. Department of Energy, 1000 Independence Avenue SW., Washington, DC 20585–0121, (202) 586–6116, *Linda.Bluestein@ee.doe.gov*.

SUPPLEMENTARY INFORMATION: This information collection request contains: (1) OMB No. New; (2) Information Collection Request Title: Clean Cities Plug-In Vehicle Community Readiness Scorecard; (3) Type of Request: New; (4) Purpose: DOE's Clean Cities initiative has developed a voluntary scorecard to assist its coalitions and stakeholders in assessing the level of readiness of their communities for plug-in electric vehicles. The principal objective of the scorecard is to provide respondents with an objective assessment and estimate of their respective community's readiness for PEV deployment as well as understand the respective community's commitment to deploying these vehicles successfully. DOE intends the scorecard to be completed by a city/county/regional sustainability or energy coordinator. As the intended respondent may not be aware of every aspect of local or regional PEV readiness, coordination among local stakeholders to gather appropriate information may be necessary.

The scorecard assessment effort will rely on responses to questions the respondent chooses to answer. The multiple-choice questions address the following topic areas: (1) Electric vehicle supply equipment permitting and inspection process; (2) PEV and electric vehicle supply equipment availability and numbers; (3) laws, incentives, and financing; (4) education and outreach; (5) utility interaction; and (6) vehicle and infrastructure planning. Respondents will provide answers through a user-friendly online interface. The answers will then be translated through a simple algorithm that will establish appropriate quantitative criteria, translating the readiness measures across several weighted categories into numeric data. Using a numberless color spectrum, a community will be rated against itself, with the colored spectrum results made available only to the respondent community. The total rankings will be normalized into a ''score'', and communities will see their own rating and may be compared to other cities.

The scorecard will use one information collection system, an online system. No other data collection system will be employed to support the scorecard. The online scorecard system DOE has developed provides several advantages. First, it avoids the need to download any forms or materials, though respondents may print out the full list of questions and answers, or a portion thereof if they wish. Second, avoiding downloads also limits potential security threats. Third, the designed system allows respondents to dynamically compare historical records, providing the opportunity to revisit the scorecard however often they like to track progress. Further, employing an online system also eliminates version control concerns, allowing for a single update to ensure that all scorecard users are using the current version.

The voluntary scorecard may be completed at any time, and there is no date by which the scorecard questions must be completed. Calculation of outcomes will be undertaken on an ongoing basis, immediately following completion of the scorecard questionnaire.

While there are approximately 90 Clean Cities coalitions across the United States, DOE expects that other communities may want to avail themselves of the opportunity to assess their respective community's PEV readiness. Therefore, DOE expects a total respondent population of approximately 100 respondents. Selecting the multiple choice answers in completing a scorecard questionnaire is expected to take under 30 minutes, although additional time of no more than 20 hours may be needed to assemble information necessary to be able to answer the questions, leading to a total burden of approximately 2,050 hours in the first year. Assembling information to update questionnaire answers in future years on a voluntary basis would be expected to take less time, on the order of 10 hours, as much of any necessary time and effort needed to research information would have been completed previously; (5) *Annual Estimated Number of Respondents:* 100; (6) *Annual Estimated Number of Total Responses:* 100; (7) *Annual Estimated Number of Burden Hours:* 2,050; (8) *Annual Estimated Reporting and Recordkeeping Cost Burden:* There is no cost associated with reporting and recordkeeping.

Statutory Authority: 42 U.S.C. Sec. 13233; 42 U.S.C. Sec. 13252(a)–(b); 42 U.S.C. 13255; 42 U.S.C. Sec. 7256.

Issued in Washington, DC, on March 22, 2012.

Henry C. Kelly,

Acting Assistant Secretary, Energy Efficiency and Renewable Energy.

[FR Doc. 2012–7663 Filed 3–29–12; 8:45 am]

BILLING CODE 6450–01–P

DEPARTMENT OF ENERGY

Proposed Agency Information Collection

AGENCY: U.S. Department of Energy, DOE.

ACTION: Notice and request for public review and comment.

SUMMARY: The Department of Energy (DOE) has submitted the Electricity Sector Cybersecurity Risk Management Maturity Pilot to the Office of Management and Budget (OMB) for clearance, a proposal for collection of information under the provisions of the Paperwork Reduction Act of 1995 (Pub. L. 104–13, 44 U.S.C. Chapter 35) and 5 CFR 1320.13.

DATES: Comments regarding this collection must be received on or before 15 days from the date of publication. If you anticipate that you will be submitting comments, but find it difficult to do so within the period of time allowed by this notice, please advise the DOE Desk Officer at OMB of your intention to make a submission as soon as possible. The Desk Officer may be telephoned at 202–395–4650.

ADDRESSES: Written comments should be sent to the DOE Desk Officer, Office of Information and Regulatory Affairs, Office of Management and Budget, New Executive Office Building, Room 10102, 735 17th Street NW., Washington, DC 20503. And to: Samara Moore, *samara.moore@hq.doe.gov,* Fax: 202–586–1472.

FOR FURTHER INFORMATION CONTACT: Samara Moore,

samara.moore@hq.doe.gov, Fax: 202–586–1472.

SUPPLEMENTARY INFORMATION: The proposed collection will be used by the Department and electric sector owners and operators to identify best practices and potential resource allocations for cybersecurity in terms of supply chain management, information sharing, asset, change and configuration management, and risk management, among others. It is imperative that the owners and operators of the nation's electric utilities, as well as the government agencies supporting the sector, have the ability to understand what capabilities and competencies will allow the sector to defend itself, and how to prioritize necessary investments. This initiative supports strategies identified in the White House Cyberspace Policy Review 2010 and the 2011 Roadmap to Achieve Energy Delivery Systems Cybersecurity. A maturity model approach was deemed to be a reasonable way to leverage existing efforts to implement key strategies designed to measure the sector's cybersecurity posture and to enable utilities to make strategic investments that will increase cybersecurity throughout the electricity sector. The pilot process will request feedback from a limited set of participants on both the model's and the assessment tool's structure and application to the unique attributes of the sector. The model structure includes domains—logical groupings of cybersecurity risk management activities—and maturity indicator levels (MILs). The content within each domain includes characteristics, which are expressions of domain activities at each level of maturity. The model is developed as a common model that can be used by the various types of entities operating within the sector, including investor-owned, municipal, and cooperative utilities. It will also enable utilities to communicate cybersecurity capabilities in meaningful terms and prioritize their cybersecurity actions and investments.

The OMB is particularly interested in comments that:

- Evaluate whether the proposed collection of information is necessary for the proper performance of the functions of the agency, including whether the information will have practical utility;
- Evaluate the accuracy of the agency's estimate of the burden of the proposed collection of information, including the validity of the methodology and assumptions used;
- Enhance the quality, utility, and clarity of the information to be collected; and
- Minimize the burden of the collection of information on those who are to respond, including through the use of appropriate automated, electronic, mechanical, or other technological collection techniques or other forms of information technology, e.g., permitting electronic submission of responses.

This information collection request contains: (1) *OMB No.* New; (2) *Information Collection Request Title:* Electric Sector Cybersecurity Risk Management Maturity Initiative; (3) *Type of Request:* New; (4) *Purpose:* The Department of Energy, at the request of the White House, and in collaboration with DHS and industry experts, has developed a maturity model with owners, operators and subject matter experts to meet their request to identify and prioritize capabilities relative to risk and cost; (5) *Annual Estimated Number of Respondents:* 17; (6) *Annual Estimated Number of Total Responses:* 17; (7) *Annual Estimated Number of Burden Hours:* 136; (8) *Annual Estimated Reporting and Recordkeeping Cost Burden:* $0.

Statutory Authority: Section 301 of the Department of Energy Organization Act, codified at 42 U.S.C. 7151.

Issued in Washington, DC, on March 26, 2012.

Patricia Hoffman,

Assistant Secretary, Office of Electricity Delivery and Energy Reliability.

[FR Doc. 2012–7666 Filed 3–29–12; 8:45 am]

BILLING CODE 6450–01–P

DEPARTMENT OF ENERGY

[12–06–LNG, 12–09–LNG, 12–10–LNG, et al.]

Orders Granting Authority To Import and Export Natural Gas and Liquefied Natural Gas During February 2012

	FE Docket Nos.
FREEPORT LNG EXPANSION, L.P. AND FLNG LIQUEFACTION, LLC	12–06–LNG
EXCELERATE ENERGY L.P	12–09–LNG
SHELL NA LNG LLC	12–10–LNG
QUICKSILVER RESOURCES INC	12–12–NG
UNITED ENERGY TRADING CANADA, ULC	12–13–NG
ENCANA NATURAL GAS INC	11–163–NG
ALCOA INC	12–11–NG
JPMORGAN LNG CO	12–15–LNG
CNE GAS SUPPLY, LLC	12–17–NG

AGENCY: Office of Fossil Energy, Department of Energy.

ACTION: Notice of orders.

SUMMARY: The Office of Fossil Energy (FE) of the Department of Energy gives notice that during February 2012, it issued Orders granting authority to import and export natural gas and liquefied natural gas. These Orders are summarized in the attached appendix and may be found on the FE Web site at *http://www.fossil.energy.gov/programs/gasregulation/authorizations/Orders-2012.html.* They are also available for inspection and copying in the Office of Fossil Energy, Office of Natural Gas Regulatory Activities, Docket Room 3E–033, Forrestal Building, 1000 Independence Avenue SW., Washington, DC 20585, (202) 586–9478. The Docket Room is open between the hours of 8 a.m. and 4:30 p.m., Monday through Friday, except Federal holidays.

Issued in Washington, DC, on March 22, 2012.

John A. Anderson,

Manager, Natural Gas Regulatory Activities, Office of Oil and Gas Global Security and Supply, Office of Fossil Energy.

Appendix

DOE/FE ORDERS GRANTING IMPORT/EXPORT AUTHORIZATIONS

Date issued	FE Docket No.	Authorization holder	Description of action
02/10/12	12–06–LNG	Freeport LNG Expansion, L.P. and FLNG Liquefaction, LLC.	Order granting long-term authority to export LNG by vessel from the Freeport Terminal to FTA nations.
02/15/12	12–09–LNG	Excelerate Energy L.P	Order granting blanket authority to import LNG from various sources by vessel.
02/15/12	12–10-ING	Shell NA LNG LLC	Order granting blanket authority to import LNG from various sources by vessel.
02/15/12	12–12–NG	Quicksilver Resources Inc	Order granting blanket authority to import/export natural gas from/to Canada.
02/15/12	12–13–NG	United Energy Trading Canada, ULC.	Order granting blanket authority to import/export natural gas from/to Canada.
02/15/12	11–163–LNG	Encana Natural Gas Inc	Order granting blanket authority to import/export LNG from/to Canada/Mexico by truck, rail, barge and waterborne vessels.
02/24/12	12–11–NG	ALCOA Inc	Order granting blanket authority to import natural gas from Canada.
02/24/12	12–15–LNG	JPMorgan LNG Co	Order granting blanket authority to import LNG from various sources by vessel.
02/24/12	12–17–NG	CNE Gas Supply, LLC	Order granting blanket authority to export natural gas to Canada/Mexico.

[FR Doc. 2012–7670 Filed 3–29–12; 8:45 am]

BILLING CODE 6450–01–P

DEPARTMENT OF ENERGY

Informational Meeting on Nuclear Fuel Cycle Options

AGENCY: Office of Fuel Cycle Technologies, Office of Nuclear Energy, Department of Energy.

ACTION: Notice of meeting.

SUMMARY: The Office of Fuel Cycle Technologies will be hosting a one-day informational meeting at the Argonne National Laboratory in Lemont, Illinois. At this meeting, input is being sought from participants knowledgeable in nuclear fuel cycles, including those from the public, universities, industry and national laboratories.

DATES: The meeting will be held on Wednesday, April 25, 2012 from 8:30 a.m. to approximately 5:30 p.m.

ADDRESSES: Argonne National Laboratory, 9700 S. Cass Avenue, Lemont, IL 60439. Any individual who wishes to attend the meeting must pre-register before April 16, 2012 at *http://www.inl.gov/conferences/nfco/.* Foreign Nationals must pre-register before April 5, 2012 and complete the ANL Visit Request form per instructions on the Web site.

FOR FURTHER INFORMATION CONTACT: Ms. Melissa Walton, Meeting Coordinator, Argonne National Laboratory, Building 208, 9700 S. Cass Avenue, Lemont, IL 60439, phone number: 630–252–4860, email: mwalton@anl.gov.

SUPPLEMENTARY INFORMATION: The meeting is open to the public, however space is limited and pre-registration is required (see **ADDRESSES** above). An agenda for the meeting is available at *http://www.inl.gov/conferences/nfco/.* This meeting is part of the activities leading to a comprehensive evaluation and screening of nuclear fuel cycle options in 2013. At this meeting, input is being sought from participants knowledgeable in nuclear fuel cycles, particularly including those from the public, universities, industry and national laboratories, to ensure that the set of fuel cycle options developed for the evaluation and screening provides a comprehensive representation of potential fuel cycle performance with respect to the evaluation criteria. The purpose of this meeting is NOT to seek input on the evaluation criteria or the pros and cons of any particular fuel cycle option. Opportunity for providing input on the evaluation criteria will occur in a future meeting later this year.

Issued in Washington, DC, on March 26, 2012.

Robert Price,

Director, Office of Systems Engineering & Integration.

[FR Doc. 2012–7664 Filed 3–29–12; 8:45 am]

BILLING CODE 6450–01–P

DEPARTMENT OF ENERGY

Federal Energy Regulatory Commission

[Docket No. CP12–91–000]

Leaf River Energy Center LLC; Notice of Application

On March 20, 2012, Leaf River Energy Center LLC (Leaf River), 53 Riverside Avenue, Westport, Connecticut 06880, filed with the Federal Energy Regulatory Commission (Commission) an application under section 7(c) of the Natural Gas Act (NGA), as amended, and part 157 of the Commission's regulations for an order amending the certificate of public convenience and necessity issued in Docket No. CP08–8–000 as amended in Docket No. CP11–107–000, to authorize Leaf River to reallocate the aggregate total facility certificated storage capacity of the Leaf River Energy Center among the previously authorized caverns, all as more fully detailed in the Application. Leaf River states that this amendment does not involve any change in total facility certificated capacity, pressures, injection rates or withdrawal rates authorized by the Commission in the original certificate order, but will result in changes in individual cavern capacities.

Questions regarding the application may be directed to James F. Bowe, Jr., Dewey & LeBoeuf LLP, 1101 New York Avenue NW., Washington, DC 20005–4213, 202–346–8000 (phone), 202–346–8102 (fax), or *jbowe@dl.com.*

Pursuant to section 157.9 of the Commission's rules, 18 CFR 157.9, within 90 days of this Notice the Commission staff will either: complete its environmental assessment (EA) and place it into the Commission's public record (eLibrary) for this proceeding; or issue a Notice of Schedule for Environmental Review. If a Notice of Schedule for Environmental Review is issued, it will indicate, among other milestones, the anticipated date for the Commission staff's issuance of the final environmental impact statement (FEIS) or EA for this proposal. The filing of the EA in the Commission's public record for this proceeding or the issuance of a Notice of Schedule for Environmental Review will serve to notify federal and state agencies of the timing for the completion of all necessary reviews, and the subsequent need to complete all federal authorizations within 90 days of

the date of issuance of the Commission staff's FEIS or EA.

There are two ways to become involved in the Commission's review of this project. First, any person wishing to obtain legal status by becoming a party to the proceedings for this project should, on or before the comment date stated below, file with the Federal Energy Regulatory Commission, 888 First Street NE., Washington, DC 20426, a motion to intervene in accordance with the requirements of the Commission's Rules of Practice and Procedure (18 CFR 385.214 or 385.211) and the Regulations under the NGA (18 CFR 157.10). A person obtaining party status will be placed on the service list maintained by the Secretary of the Commission and will receive copies of all documents filed by the applicant and by all other parties. A party must submit seven copies of filings made with the Commission and must mail a copy to the applicant and to every other party in the proceeding. Only parties to the proceeding can ask for court review of Commission orders in the proceeding.

Persons who wish to comment only on the environmental review of this project should submit an original and two copies of their comments to the Secretary of the Commission. Environmental cementers will be placed on the Commission's environmental mailing list, will receive copies of the environmental documents, and will be notified of meetings associated with the Commission's environmental review process. Environmental cementers will not be required to serve copies of filed documents on all other parties. However, the nonparty commenters will not receive copies of all documents filed by other parties or issued by the Commission (except for the mailing of environmental documents issued by the Commission) and will not have the right to seek court review of the Commission's final order.

However, a person does not have to intervene in order to have comments considered. The second way to participate is by filing with the Secretary of the Commission, as soon as possible, an original and two copies of comments in support of or in opposition to this project. The Commission will consider these comments in determining the appropriate action to be taken, but the filing of a comment alone will not serve to make the filer a party to the proceeding. The Commission's rules require that persons filing comments in opposition to the project provide copies of their protests only to the party or parties directly involved in the protest.

The Commission encourages electronic submission of protests and interventions in lieu of paper using the ''eFiling'' link at *http://www.ferc.gov.* Persons unable to file electronically should submit an original and seven copies of the protest or intervention to the Federal Energy Regulatory Commission, 888 First Street NE., Washington, DC 20426. This filing is accessible on-line at *http://www.ferc.gov* using the ''eLibrary'' link and is available for review in the Commission's Public Reference Room in Washington, DC. There is an ''eSubscription'' link on the Web site that enables subscribers to receive email notification when a document is added to a subscribed docket(s). For assistance with any FERC Online service, please email *FERCOnlineSupport@ferc.gov,* or call (866) 208–3676 (toll free) or TTY, call (202) 502–8659.

Comment Date: 5 p.m. Eastern Time on April 16, 2012

Dated: March 26, 2012.

Kimberly D. Bose,

Secretary.

[FR Doc. 2012–7644 Filed 3–29–12; 8:45 am]

BILLING CODE 6717–01–P

DEPARTMENT OF ENERGY

Federal Energy Regulatory Commission

[Docket No. EL12–49–000]

Northern Indiana Public Service Company; Notice of Petition for Declaratory Order

Take notice that on March 16, 2012, pursuant to Rule 207 of the Federal Energy Regulatory Commission's (Commission) Rules of Practice and Procedure, 18 CFR 385.207, section 219 of the Federal Power Act, 16 U.S.C. 824e, and 824s(a), and Order No. 679,[1] Northern Indiana Public Service Company (NIPSCO) filed a Petition for Declaratory Order, requesting that the Commission issue an order granting transmission rate incentives related to the Reynolds to Burr Oak to Hiple 345 kV transmission line, a Multi-Value Project approved under the Midwest Independent Transmission System Operator, Inc. Transmission Expansion Plan process.

Any person desiring to intervene or to protest this filing must file in accordance with Rules 211 and 214 of the Commission's Rules of Practice and Procedure (18 CFR 385.211, 385.214). Protests will be considered by the Commission in determining the appropriate action to be taken, but will not serve to make protestants parties to the proceeding. Any person wishing to become a party must file a notice of intervention or motion to intervene, as appropriate. Such notices, motions, or protests must be filed on or before the comment date. On or before the comment date, it is not necessary to serve motions to intervene or protests on persons other than the Applicant.

The Commission encourages electronic submission of protests and interventions in lieu of paper using the ''eFiling'' link at *http://www.ferc.gov.* Persons unable to file electronically should submit an original and 14 copies of the protest or intervention to the Federal Energy Regulatory Commission, 888 First Street NE., Washington, DC 20426.

This filing is accessible on-line at *http://www.ferc.gov,* using the ''eLibrary'' link and is available for review in the Commission's Public Reference Room in Washington, DC. There is an ''eSubscription'' link on the Web site that enables subscribers to receive email notification when a document is added to a subscribed docket(s). For assistance with any FERC Online service, please email *FERCOnlineSupport@ferc.gov,* or call (866) 208–3676 (toll free). For TTY, call (202) 502–8659.

Comment Date: 5 p.m. Eastern Time on April 16, 2012.

Dated: March 26, 2012.

Kimberly D. Bose,

Secretary.

[FR Doc. 2012–7645 Filed 3–29–12; 8:45 am]

BILLING CODE 6717–01–P

DEPARTMENT OF ENERGY

Federal Energy Regulatory Commission

[Project No. 14354–000]

Long Canyon Pumped Storage Project; Notice of Preliminary Permit Application Accepted for Filing and Soliciting Comments, Motions To Intervene, and Competing Applications

On January 12, 2012, Utah Independent Power, Inc., Nevada, filed an application for a preliminary permit, pursuant to section 4(f) of the Federal Power Act (FPA), proposing to study the feasibility of the Long Canyon Pumped Storage Project to be located near the town of Moab, Grand County, Utah. The

[1] Promoting Transmission Investment Through Pricing Reform, Order No. 679, FERC Stats. & Regs. ¶ 31,222, order on reh'g, Order No. 679–A, FERC Stats. & Regs. ¶ 3l 31,236 (2006), order on reh'g, 119FERC ¶ 61,062 (2007).

project would affect federal lands administered by the Bureau of Land Management. The sole purpose of a preliminary permit, if issued, is to grant the permit holder priority to file a license application during the permit term. A preliminary permit does not authorize the permit holder to perform any land-disturbing activities or otherwise enter upon lands or waters owned by others without the owners' express permission.

The proposed project would consist of the following: (1) An upper reservoir formed by a 160-foot-high by 6,750-foot-long, roller-compacted concrete (RCC) dam (an open ''U''—shaped structure varying from grade to roughly 160-foot-high) having a total storage capacity of 5,530 acre-feet and a water surface area of 90 acres at full pool elevation of 6,000 feet above mean-sea-level (msl); (2) a lower reservoir formed by a 200-foot-high by 730-foot-long, RCC dam, having a total storage capacity of 5,530 acre-feet and a water surface area of 110 acres at full pool elevation of 4,200 feet msl; (3) two 8,510-foot-long by 16-foot-diameter penstocks; (4) an underground powerhouse roughly 750-feet-long by 175-feet-high by 70-feet-wide; (5) two 320-foot-long by two 18-foot diameter tailraces; (6) an access tunnel roughly 36-feet-in-diameter and 2,470-feet-long, connecting the project's powerhouse to Grand County Highway 279; (7) the existing trail-road relocated to the south side of the reservoir to an elevation of 4,210 feet msl; and (8) pump-turbines with a capacity of roughly 800 megawatts (MW) (3 units × 267 MW unit). The annual energy output would be approximately 1,077,000 megawatthours. Twin 25—kilovolt (kV) circuit transmission lines would interconnect with an existing Rocky Mountain Power transmission line via a 40-mile-long interconnection.

Applicant Contact: Mr. Frank L. Mazzone, Utah Independent Power, Inc., 957 Fairway Drive, Sonoma, CA 95476; phone (707) 996–2573.

FERC Contact: Brian Csernak; phone: (202) 502–6144.

Deadline for filing comments, motions to intervene, competing applications (without notices of intent), or notices of intent to file competing applications: 60 days from the issuance of this notice. Competing applications and notices of intent must meet the requirements of 18 CFR 4.36. Comments, motions to intervene, notices of intent, and competing applications may be filed electronically via the Internet. See 18 CFR 385.2001(a)(1)(iii) and the instructions on the Commission's Web site *http://www.ferc.gov/docs-filing/efiling.asp*. Commenters can submit brief comments up to 6,000 characters, without prior registration, using the eComment system at *http://www.ferc.gov/docs-filing/ecomment.asp*. You must include your name and contact information at the end of your comments. For assistance, please contact FERC Online Support at *FERCOnlineSupport@ferc.gov* or toll free at 1–866–208–3676, or for TTY, (202) 502–8659. Although the Commission strongly encourages electronic filing, documents may also be paper-filed. To paper-file, mail an original and seven copies to: Kimberly D. Bose, Secretary, Federal Energy Regulatory Commission, 888 First Street NE., Washington, DC 20426.

More information about this project, including a copy of the application, can be viewed or printed on the ''eLibrary'' link of Commission's Web site at *http://www.ferc.gov/docs-filing/elibrary.asp*. Enter the docket number (P–14354) in the docket number field to access the document. For assistance, contact FERC Online Support.

Dated: March 23, 2012.

Kimberly D. Bose,

Secretary.

[FR Doc. 2012–7642 Filed 3–29–12; 8:45 am]

BILLING CODE 6717–01–P

DEPARTMENT OF ENERGY

Federal Energy Regulatory Commission

[Docket No. AD10–12–003]

Increasing Market and Planning Efficiency Through Improved Software; Notice of Technical Conference: Increasing Real-Time and Day-Ahead Market Efficiency Through Improved Software

Take notice that Commission staff will convene a technical conference on June 25, 26, and 27, 2012 to discuss opportunities for increasing real-time and day-ahead market efficiency through improved software. A detailed agenda with the list of and times for the selected speakers will be published on the Commission's Increasing Market and Planning Efficiency Web site [1] after May 14, 2012.

This conference will bring together diverse experts from ISOs/RTOs, non-market utilities, the software industry, government, research centers and academia for the purposes of stimulating discussion and sharing of information about the technical aspects of these issues and identifying fruitful avenues for research. This conference is intended to build on the discussions initiated in the Commission's June 2010 and June 2011 staff technical conferences on increasing market and planning efficiency through improved software.

The conferences held in June 2010 and June 2011 produced presentations on several advanced approaches to market modeling which appear to have significant promise for potential efficiency improvements: Stochastic modeling; optimal transmission switching; AC optimal power flow modeling; and use of active and dynamic transmission ratings. Significant computational impediments to efficiently and reliably implement these approaches must be understood and overcome before benefits can be realized. In this conference, we seek to explore research and technical steps that would be needed to implement these and other advanced technologies in the future.

In particular we solicit proposals for presentations on topics and questions such as the following:

(1) *Stochastic modeling for unit commitment and operating reserves:* Given the difficulty in formulating and solving full-scale stochastic unit-commitment problems, what interim steps might be taken to more intelligently incorporate information about uncertainty into unit-commitment and dispatch? Specifically:

- How can uncertainty be described in a manageable set of scenarios or constraints that improve unit-commitment and dispatch while allowing good solutions to be achieved in the required timeframe?
- If a stochastic unit-commitment model is used, how should day-ahead prices be calculated, given that the stochastic formulation no longer produces as part of its solution a single set of deterministic shadow prices for power at each location?
- How would a stochastic day-ahead unit commitment mechanism alter current market software for other processes (for example, reliability unit-commitment processes)?
- What steps toward better incorporation of uncertainty into unit-commitment might be taken over the next 5 to 10 years?
- What methods can be used to calculate requirements for contingency reserves and regulating reserves?
  - How can reserves calculations more completely capture the uncertainty and variability of the system, including forecast error?
  - How can outage probability be captured in contingency reserve

[1] *http://www.ferc.gov/industries/electric/indus-act/market-planning.asp.*

calculations, and how good is the available data?

○ What methods can be used to determine reserve zones?

(2) *Optimal transmission switching:*

▪ Simple optimal DC transmission switching appears to represent a potentially solvable technical problem using existing computational resources if transmission operators optimize only a small number of transmission switch positions. It is less clear whether transmission switching model formulations that include realistic representations of reliability requirements are solvable. What is the performance of these more complex model formulations?

▪ What additional computational impediments, if any, exist to implementing optimal transmission switching over a small number of switches while maintaining reliability?

▪ What steps toward optimal transmission switching might be taken over the next 5 to 10 years?

(3) *AC optimal power flow modeling:*

▪ What is the current state of computational capability with respect to dependably solving AC optimal power flow problems, including analysis of power system reliability?

▪ Discussions during previous conferences have centered on concerns that current system data quality might not allow for an AC optimal power flow model to be properly formulated and solved. What are the specific data concerns, and what needs to be done to address them?

▪ What steps toward use of AC optimal power flow modeling might be taken over the next 5 to 10 years?

(4) *Adaptive and dynamic transmission ratings:*

▪ Previous presentations examined the use of post-contingency analysis when determining transmission ratings, including consideration of availability of ramping capability. How can (or have) adaptive transmission ratings been implemented?

▪ Previous presentations also examined how transmission ratings might be updated in real time in response to ambient conditions. How have such dynamic transmission ratings been implemented?

▪ What are the data or computational challenges associated with implementing adaptive or dynamic transmission ratings?

While the topics suggested above are largely forward-looking, we also encourage proposals for presentations on best practices and other analyses of current operations with respect to these and related topics.

The technical conference will be held in the Commission Meeting Room at the Federal Energy Regulatory Commission, 888 First Street NE., Washington, DC 20426. All interested participants are invited to attend, and participants with ideas for relevant presentations are invited to nominate themselves to speak at the conference.

Speaker nominations must be submitted on or before April 27, 2012 through the Commission's Web site [2] by providing the proposed speaker's contact information along with a title, abstract, and list of contributing authors for the proposed presentation. Proposed presentations should be closely related to the topics discussed above. Speakers and presentations will be selected to ensure relevant topics and to accommodate time constraints.

Although registration is not required for general attendance by U.S. citizens, we encourage those planning to attend the conference to register through the Commission's Web site.[3] We will provide printed nametags for those who register on or before June 20, 2012.

Due to new security procedures, we strongly encourage attendees who are not citizens of the United States to register for the conference by June 1, 2012, in order to avoid any delay associated with being processed by FERC security.

Following the conferences, a comment date will be set for the filing of post-conference comments.

There is an ''eSubscription'' link on the Web site that enables subscribers to receive email notification when a document is added to a subscribed docket(s). For assistance with any FERC Online service, please email *FERCOnlineSupport@ferc.gov,* or call 866 208–3676 (toll free). For TTY, call 202 502–8659.

A free webcast of this event will be available through the FERC Web site. Webcast viewers will not be able to participate during the technical conference. Anyone with Internet access interested in viewing the webcast of this conference can do so by navigating to Calendar of Events at *www.ferc.gov.* The events will contain a link to the webcast. The Capitol Connection provides technical support for the webcasts and offers the option of listening to the conferences via phone-bridge for a fee. If you have any questions, visit *www.CapitolConnection.org* or call (703) 993–3100.

FERC conferences are accessible under section 508 of the Rehabilitation Act of 1973. For accessibility accommodations please send an email to *accessibility@ferc.gov* or call toll free (866) 208–3372 (voice) or (202) 502–8659 (TTY), or send a fax to (202) 208–2106 with the required accommodations.

For further information about these conferences, please contact:

Sarah McKinley (Logistical Information), Office of External Affairs, (202) 502–8004, *Sarah.McKinley@ferc.gov.*

Brian Bak (Technical Information), Office of Energy Policy and Innovation, (202) 502–6574, *Brian.Bak@ferc.gov.*

Dated: March 26, 2012.

Kimberly D. Bose,

Secretary.

[FR Doc. 2012–7643 Filed 3–29–12; 8:45 am]

BILLING CODE 6717–01–P

[2] The speaker nomination form is located at *https://www.ferc.gov/whats-new/registration/real-market-6-25-12-speaker-form.asp.*

[3] The registration form is located at *https://www.ferc.gov/whats-new/registration/real-market-6-25-12-form.asp.*

ENVIRONMENTAL PROTECTION AGENCY

[ER–FRL–9002–3]

Environmental Impacts Statements; Notice of Availability

Responsible Agency: Office of Federal Activities, General Information (202) 564–7146 or *http://www.epa.gov/compliance/nepa/.*

Weekly receipt of Environmental Impact Statements

Filed 03/19/2012 Through 03/23/2012

Pursuant to 40 CFR 1506.9.

Notice

Section 309(a) of the Clean Air Act requires that EPA make public its comments on EISs issued by other Federal agencies. EPA's comment letters on EISs are available at: *http://www.epa.gov/compliance/nepa/eisdata.html.*

EIS No. 20120080, Revised Final EIS, USACE, FL, Central and Southern Florida Project, Broward County Water Preserve Areas, Updates Resulting from Policy Changes that occurred since 2007 Civil Works Board Approval, South Florida Water Management District (SFWMD), Comprehensive Everglades Restoration Plan, (CERP), Broward County, FL, *Review Period Ends:* 04/30/2012, *Contact:* Angela E. Dunn 904–232–2108.

EIS No. 20120081, Draft EIS, USFWS, AK, Izembek National Wildlife Refuge Land Exchange/Road Corridor,

Proposed Land Exchange for the Purpose of Construction of a Road between Communities of King Cove and Cold Bay, USACE Section 10 and 404 Permits, AK, *Comment Period Ends:* 05/18/2012, Contact: Stephanie Brady 907–786–3357.

EIS No. 20120082, Final EIS, USFS, OR, Snow Basin Vegetation Management Project, Proposal to Implementing Commercial Harvest of Timber, Post Harvest Non-commercial Thinning, Whitman Ranger District, Wallowa-Whitman Forest, Baker County, OR, *Review Period Ends:* 04/30/2012, *Contact:* Dea Nelson 541–523–6391.

EIS No. 20120083, Final Supplement, BLM, NV, Upper Las Vegas Wash Conservation Transfer Area (CTA), Propose to Establish a Final Boundary, Implementation, Clark County, NV, *Review Period Ends:* 04/30/2012, Contact: Gayle Marrs-Smith 702–515–5156.

EIS No. 20120084, Final EIS, USFS, FL, City of Tallahassee Southwestern Transmission Line Project, Proposes to Construct, Operate and Maintain a New Overhead 230-kilovolt (kV), Electric Transmission Line, Special-Use-Permit (SUP), Apalachicola National Forest (ANF), Leon County, FL, *Review Period Ends:* 04/30/2012, *Contact:* Harold Shenk 850–926–3561.

EIS No. 20120085, Final EIS, USN, WA, Trident Support Facilities Explosives Handling Wharf (EHW–2), New Information, Construction and Operating, Naval Base Kitsap Bangor, Silverdale, WA, *Review Period Ends:* 04/30/2012, *Contact:* Christine Stevenson 360–396–0080.

EIS No. 20120086, Draft EIS, DOE, CO, Granby Pumping Plant Switchyard—Windy Gap Substation Transmission Line Rebuild, To Replace Existing Transmission Line with Double Circuit Transmission, Grand County, CO, *Comment Period Ends:* 05/29/2012, *Contact:* Jim Hartman 720–962–7255.

EIS No. 20120087, Draft EIS, USFS, OR, Eden Ridge Timber Sales, Implementation, Powers Ranger District, Rogue River-Siskiyou National Forest, Coos County, OR, *Comment Period Ends:* 05/14/2012, *Contact:* Wesley Crum 541–439–6200.

EIS No. 20120088, Second Draft EIS (Tiering), FHWA, IL, TIER 2—Elgin O'Hare—West Bypass, Extending the Planning Period from 2030 to 2040, Federal Approvals and Funding, Cook and DuPage Counties, IL, *Comment Period Ends:* 05/14/2012, *Contact:* Norman Stoner 217–492–4600.

The U.S. Department of Transportation's Federal Highway Administration and the Federal Aviation Administration are Joint Lead agencies for this project.

EIS No. 20120089, Final EIS, USFS, CA, Greys Mountain Ecological Restoration Project, Proposed Forest Management Treatments to Reduce Fire Hazard and Restore Forest Health, Sierra National Forest, Bass Lake Ranger District, Madera and Mariposa Counties, CA, *Review Period Ends:* 04/30/2012, *Contact:* Burt Stalter 559–887–2218 ext. 3208.

EIS No. 20120090, Draft EIS, USAF, AK, Modernization and Enhancement of Ranges, Airspace, and Training Areas in the Joint Pacific Alaska Range Complex, AK, *Comment Period Ends:* 06/07/2012, *Contact:* Mark Peterson 808–449–1078.

The U.S. Army and the U.S. Air Force are Joint Lead agencies for this project.

EIS No. 20120091, Second Draft Supplement, BLM, AK, National Petroleum Reserve -Alaska (NPR–A) Integrated Activity Plan, To Determine Appropriate Management for BLM–Administrated Lands in the NPR–A, North Slope Borough, AK, *Comment Period Ends:* 05/29/2012, *Contact:* Jim Ducker 907–271–3130.

EIS No. 20120092, Final EIS, USACE, LA, Louisiana Coastal Area Barataria Basin Barrier Shoreline Restoration, To Restore the Barrier Shoreline Ecosystem and Significantly Reduce the Loss of Estuarine and Freshwater Wetlands, Caminada Headland in Lafourche and Jefferson Parishes and Shell Islands in Plaquemines Parish, LA, *Review Period Ends:* 04/30/2012, *Contact:* Dr. William P. Klein, Jr. 504–862–2540.

Amended Notices

EIS No. 20110440, Revised Draft EIS, USFS, ID, Idaho Panhandle National Forests, Land Management Plan, Revises the 1987 Forest Plan, Implementation, Boundary, Bonner, Kootenai, Benewah, and Shoshone Counties, ID and Pend Oreille County, WA, *Comment Period Ends:* 05/07/2012, *Contact:* Mary Farnsworth 208–765–7223. Revision to FR Notice Published 01/13/2012; Extending Comment Period from 04/4/2012 to 05/07/2012.

EIS No. 20110441, Revised Draft EIS, USFS, MT, Kootenai National Forest Land Management Plan, Revises the 1987 Forest Plan, Implementation, Lincoln, Sanders, Flathead Counties, MT and Bonner and Boundary Counties, ID, *Comment Period Ends:* 04/04/2012, *Contact:* Paul Bradford 406–293–6211.

Revision to FR Notice Published 01/06/2012; Extending Comment Period from 04/04/2012 to 05/07/2012.

EIS No. 20120028, Draft EIS, USACE, CA, Clearwater Program, To Meet the Wastewater Management Needs of the Joint Outfall System (JOS) Through the Year 2050, Near San Pedro, Section 404 Permit, Los Angeles County, CA, *Comment Period Ends:* 04/10/2012, *Contact:* Dr. Aaron O. Allen 805–585–2148.

Revision to FR Notice Published 2/10/2012; Comment Period Ends 04/10/2012.

Dated: March 27, 2012.

Cliff Rader,

Director, NEPA Compliance Division, Office of Federal Activities.

[FR Doc. 2012–7690 Filed 3–29–12; 8:45 am]

BILLING CODE 6560–50–P

ENVIRONMENTAL PROTECTION AGENCY

[FRL–9650–8]

Draft NPDES General Permit for Discharges From the Oil and Gas Extraction Point Source Category to Coastal Waters in Texas (TXG330000)

AGENCY: Environmental Protection Agency (EPA).

ACTION: Proposal of NPDES General Permit Renewal.

SUMMARY: EPA Region 6 today proposes a National Pollutant Discharge Elimination System (NPDES) general permit regulating discharges from oil and gas wells in the Coastal Subcategory in Texas and in the Stripper Subcategory which discharge into coastal waters in Texas.

DATES: Comments must be received by May 14, 2012.

ADDRESSES: *Comments should be sent to:* Ms. Diane Smith (6WQ–NP), U.S. Environmental Protection Agency, Region 6, 1445 Ross Avenue, Dallas, Texas 75202–2733.

Comments may also be submitted via EMAIL to the following address: *smith.diane@epa.gov.*

Public Meeting/Public Hearing Information

A public meeting and a public hearing on the proposed permit will be held at the times and place below. The meeting will include a presentation on the proposed permit followed by the opportunity for questions and answers. The public hearing will be held in accordance with the requirements of 40 CFR 124.12. At the public hearing, any person may submit oral or written

statements and data concerning the proposed permit. Any person who cannot attend the public hearing may still submit written comments, which have the same weight as comments made at the public hearing, through the end of the public comment period.

Date: April 11, 2012.

Time: Public meeting starts at 2 p.m. and public hearing starts at 3:30 p.m.

Place: Houston Marriott South Hobby Airport, Galveston Room, 9100 Gulf Freeway, Houston, TX 77017.

FOR FURTHER INFORMATION CONTACT: Ms. Diane Smith, Region 6, U.S. Environmental Protection Agency, 1445 Ross Avenue, Dallas, Texas 75202–2733. Telephone: (214) 665–2145.

A complete draft permit and a fact sheet more fully explaining the proposal may be obtained online from the Web site below or from Ms. Smith. In addition, the Agency's current administrative record on the proposal is available for examination at the Region's Dallas offices during normal working hours after providing Ms. Smith 24 hours advance notice. A copy of the proposed permit, fact sheet, and this **Federal Register** Notice may be found on the EPA Region 6 Web site at: *http://www.epa.gov/region6/water/npdes/genpermit/index.htm.*

SUPPLEMENTARY INFORMATION: The permit prohibits the discharge of drilling fluid, drill cuttings, produced sand and well treatment, completion and workover fluids. Discharges of dewatering effluents from reserve pits are also proposed to be prohibited. Produced water discharges are prohibited, except from wells in the Stripper Subcategory located east of the 98th meridian whose produced water comes from the Carrizo/Wilcox, Reklaw or Bartosh formations in Texas as authorized by the expiring permit. The discharge of deck drainage, formation test fluids, sanitary waste, domestic waste and miscellaneous discharges is authorized. More stringent requirements are proposed to regulate discharges to water quality-impaired waterbodies. Pursuant to the section 316(b) of the Clean Water Act (CWA), requirements for new facilities are also proposed in this permit. Major changes also include definition of ''operator'', acute toxicity test for produced water, spill prevention best management practices, and electronic reporting requirements. Proposed changes and rationales for those changes are described in the fact sheet. To obtain discharge authorization, operators of such facilities must submit a new Notice of Intent (NOI). To determine whether your facility, company, business, organization, etc. is regulated by this action, you should carefully examine the applicability criteria in Part I, Section A.1 of this permit. If you have questions regarding the applicability of this action to a particular entity, consult the person listed in the preceding **FOR FURTHER INFORMATION CONTACT** section.

Other Legal Requirements

A. State Certification

Under section 401(a)(1) of the CWA, EPA may not issue an NPDES permit until the State in which the discharge will occur grants or waives certification to ensure compliance with appropriate requirements of the CWA and State law. EPA will seek certification from the Railroad Commission of Texas prior to issuing a final permit.

B. Coastal Zone Management Act

The Coastal Zone Management Act and its implementing regulations (15 CFR 930) require that any Federally licensed or permitted activity affecting the coastal zone of a state with an approved Coastal Zone Management Program be consistent with that Program. EPA has concluded, based on the conditions, limitations and prohibitions of this permit that the discharges associated with this permit are consistent with the Texas Coastal Management Program goals and policies. EPA previously received a consistency determination from the Texas Coastal Coordination Council on February 7, 2007. EPA is seeking a consistency determination prior to issuing this permit reissuance.

C. National Environmental Policy Act

EPA's regulations at 40 CFR part 6, subpart F, which implement the National Environmental Policy Act of 1969 (NEPA), 42 U.S.C., 4331, *et seq.,* provide the procedures for carrying out the NEPA environmental review process for the issuance of new source NPDES permits. The purpose of this review process is to determine if any significant environmental impacts are anticipated by issuance of NPDES permits authorizing discharges from new sources. EPA prepared an environmental assessment (EA) in accordance with 40 CFR 6.604 when the previous permit was drafted. EPA is working on a supplemental information report (SIR) and tentatively determines, based on information available, that there will be no significant impact as the result of reissuing this permit. EPA will make the final SIR on EPA's Web site *http://www.epa.gov/region6/water/npdes/genpermit/index.htm* when it becomes available prior to the reissuance of the final permit.

D. Endangered Species Act

When EPA issued the previous Permit TXG330000, effective October 21, 1993, covering existing sources, but not New Sources, the United States Fish and Wildlife Service (FWS) concurred with EPA's finding that the permit was unlikely to adversely affect any threatened or endangered species or their critical habitat. When EPA issued Permit TXG290000, effective February 8, 1995, the Service also concurred with EPA's finding that the permit was unlikely to adversely affect any threatened or endangered species or their critical habitat. The Region found that adding New Source coverage to the permit is also unlikely to adversely affect any threatened or endangered species or its critical habitat. EPA received written concurrence from the FWS on May 2, 2001, and from the National Marine Fisheries Service (NMFS) on May 1, 2001, on that determination. EPA proposes to add more requirements, such as characterization study for produced water, intake velocity limit for cooling water intake structures from new facilities, and etc., to the current permit. EPA has been working on a biological evaluation (BE) update to evaluate the effects of this permitting action on federally listed endangered and threatened species.

E. Magnuson-Stevens Fishery Conservation and Management Act

The 1996 amendments to the Magnuson-Stevens Fishery Conservation and Management Act set forth a new mandate to identify and protect important marine and anadromous fisheries habitats. The purpose of addressing habitat in this act is to further the goal of maintaining sustainable fisheries. Guidance and procedures for implementing these amendments are contained in National Marine Fisheries Service regulations (50 CFR 600.805–600.930). These regulations specify that any Federal agency that authorizes or proposes to authorize an activity which would adversely affect an Essential Fish Habitat is subject to the consultation provisions of the Manguson-Stevens Act. The Texas Coastal Subcategory areas covered by this general permit include Essential Fish Habitat designated under the Magnuson-Stevens Act.

The Region previously found that issuance of the general permit would be unlikely to adversely affect Essential Fish Habitat. EPA received written

concurrence from NMFS on that determination by a letter dated January 10, 2007, when EPA reissued the expiring permit in 2007. Because there are no changes which make the permit less stringent through this action, EPA again finds that its issuance is unlikely to adversely affect Essential Fish Habitat. EPA is seeking concurrence with that decision from NMFS.

F. Historic Preservation Act

Facilities which adversely affect properties listed or eligible for listing in the National Register of Historical Places are not authorized to discharge under this permit.

G. Paperwork Reduction Act

The information collection required by this permit has been approved by OMB under the provisions of the Paperwork Reduction Act, 44 U.S.C. 3501 *et seq.,* in submission made for the NPDES permit program and assigned OMB control numbers 2040–0086 (NPDES permit application) and 2040–0004 (discharge monitoring reports). Because this permit authorizes limited discharges, the reporting time for discharges is less than that for permittees discharging under the Territorial Seas of Texas (TXG260000) or to Outer Continental Shelf (GMG290000) permits. Also, this proposed permit requires electronic reporting for discharge monitoring reports, so it will save some reporting time and paper mailing costs.

H. Regulatory Flexibility Act

The Regulatory Flexibility Act, 5 USC 601 *et seq,* requires that EPA prepare a regulatory flexibility analysis for regulations that have a significant impact on a substantial number of small entities. This permit is not a ''rule'' subject to the Regulatory Flexibility Act. EPA prepared a regulatory flexibility analysis, however, on the promulgation of the Coastal Subcategory guidelines on which many of the permit's effluent limitations are based. That analysis shows that compliance with the permit requirements will not result in a significant impact on dischargers, including small businesses, covered by this permit. EPA Region 6, therefore, concludes that the permit being proposed today will not have a significant impact on a substantial number of small entities.

Dated: March 19, 2012.

William K. Honker,

Acting Director, Water Quality Protection Division, EPA Region 6.

[FR Doc. 2012–7686 Filed 3–29–12; 8:45 am]

BILLING CODE 6560–50–P

ENVIRONMENTAL PROTECTION AGENCY

[FRL–9654–5]

Proposed CERCLA Administrative Settlement; George L. Gomez and Patricia A. Gomez.

AGENCY: Environmental Protection Agency

ACTION: Notice; request for public comment

SUMMARY: In accordance with Section 122(h)(1) of the Comprehensive Environmental Response, Compensation, and Liability Act, as amended (CERCLA), 42 U.S.C. 9622(h)(1), notice is hereby given of a proposed administrative settlement for the Terrible Mine Site, Isle Mining District, Custer County, Colorado with George L. Gomez and Patricia A. Gomez based upon an inability to pay settlement. The settlement includes a covenant not to sue the settling party pursuant to Section 107(a) of CERCLA, 42 U.S.C. 9607(a), and provides that the settling parties will sign and execute an environmental covenant on the Site. For thirty (30) days following the date of publication of this notice, the agency will receive written comments relating to the settlement. The agency will consider all comments received and may modify or withdraw its consent to the settlement if comments received disclose facts or considerations which indicate that the settlement is inappropriate, improper, or inadequate. The agency's response to any comments received will be available for public inspection at the EPA Region 8 Records Center, 1595 Wynkoop Street, Denver, Colorado 80202.

DATES: Comments must be submitted on or before April 30, 2012.

ADDRESSES: The proposed settlement is available for public inspection at the EPA Region 8 Records Center, 1595 Wynkoop Street, Denver, Colorado 80202. A copy of the proposed settlement may be obtained from John Works, EPA Technical Enforcement Officer, EPA Region 8, 1595 Wynkoop Street, Denver, CO 80202, 303.312.6196. Comments should reference the Terrible Mine Site, Isle Mining District, Custer County, Colorado and EPA Docket No. 08–2012–0003 and should be addressed to John Works, EPA Technical Enforcement Officer, EPA Region 8, 1595 Wynkoop Street, Denver, CO 80202.

FOR FURTHER INFORMATION CONTACT: John Works, EPA Technical Enforcement Officer, EPA Region 8, 1595 Wynkoop Street, Denver, CO 80202, 303–312–6196.

Dated: March 21, 2012.

Andrew M. Gaydosh,

Assistant Regional Administrator, Office of Enforcement and Compliance and Environmental Justice, U. S. Environmental Protection Agency, Region 8, Denver, CO.

[FR Doc. 2012–7682 Filed 3–29–12; 8:45 am]

BILLING CODE 6560–50–P

FEDERAL COMMUNICATIONS COMMISSION

Information Collection Being Reviewed by the Federal Communications Commission

AGENCY: Federal Communications Commission.

ACTION: Notice and request for comments.

SUMMARY: The Federal Communications Commission (FCC), as part of its continuing effort to reduce paperwork burdens, invites the general public and other Federal agencies to take this opportunity to comment on the following information collection, as required by the Paperwork Reduction Act (PRA) of 1995. Comments are requested concerning (a) whether the proposed collection of information is necessary for the proper performance of the functions of the Commission, including whether the information shall have practical utility; (b) the accuracy of the Commission's burden estimate; (c) ways to enhance the quality, utility, and clarity of the information collected; (d) ways to minimize the burden of the collection of information on the respondents, including the use of automated collection techniques or other forms of information technology; and (e) ways to further reduce the information collection burden on small business concerns with fewer than 25 employees.

The FCC may not conduct or sponsor a collection of information unless it displays a currently valid control number. No person shall be subject to any penalty for failing to comply with a collection of information subject to the PRA that does not display a valid Office of Management and Budget (OMB) control number.

DATES: Written PRA comments should be submitted on or before May 29, 2012. If you anticipate that you will be submitting comments, but find it difficult to do so within the period of time allowed by this notice, you should advise the contact listed below as soon as possible.

ADDRESSES: Direct all PRA comments to the Federal Communications Commission via email to *PRA@fcc.gov and Cathy.Williams@fcc.gov.*

FOR FURTHER INFORMATION CONTACT: For additional information about the information collection, contact Cathy Williams at (202) 418–2918.

SUPPLEMENTARY INFORMATION:

OMB Control Number: 3060–1162.

Title: Closed Captioning of Video Programming Delivered Using Internet Protocol, and Apparatus Closed Caption Requirements.

Form Number: N/A.

Type of Review: Revision of a currently approved collection.

Respondents: Individuals or households; Businesses or other for-profit entities; Not-for-profit institutions.

Number of Respondents and Responses: 1,762 respondents; 4,684 responses.

Estimated Time per Response: 0.084 to 10 hours.

Frequency of Response: One time and on occasion reporting requirements; Recordkeeping requirement; Third-party disclosure requirement.

Obligation To Respond: Mandatory; Required to obtain or retain benefits. The statutory authority for this information collection is contained in the Twenty-First Century Communications and Video Accessibility Act of 2010, Public Law 111–260, 124 Stat. 2751, and Sections 4(i), 4(j), 303, 330(b), 713, and 716 of the Communications Act of 1934, as amended, 47 U.S.C. 154(i), 154(j), 303, 330(b), 613, and 617.

Total Annual Burden: 11,685 hours.

Total Annual Cost: $307,800.

Privacy Act Impact Assessment: Yes. The Privacy Impact Assessment (PIA) was completed on June 28, 2007. It may be reviewed at: *http://www.fcc.gov/omd/privacyact/Privacy_Impact_Assessment.html.* The Commission is in the process of updating the PIA to incorporate various revisions made to the SORN.

Nature and Extent of Confidentiality: Some assurances of confidentiality are being provided to the respondents.

Parties filing petitions for exemption based on economic burden, requests for Commission determinations of technical feasibility and achievability, requests for purpose-based waivers, or responses to complaints alleging violations of the Commission's rules may seek confidential treatment of information they provide pursuant to the Commission's existing confidentiality rules. *See* 47 CFR 0.459.

The Commission is not requesting that individuals who file complaints alleging violations of the Commission's rules (complainants) submit confidential information (e.g., credit card numbers, social security numbers, or personal financial information) to the Commission. The Commission requests that complainants submit their names, addresses, and other contact information, which Commission staff needs to process complaints. Any use of this information is covered under the routine uses listed in the Commission's SORN, FCC/CGB–1, ''Informal Complaints and Inquiries.''

The PIA that the FCC completed on June 28, 2007 gives a full and complete explanation of how the FCC collects, stores, maintains, safeguards, and destroys PII, as required by OMB regulations and the Privacy Act, 5 U.S.C. 552a. The PIA may be viewed at: *http://www.fcc.gov/omd/privacyact/Privacy_Impact_Assessment.html.*

Also, the Commission will prepare a revision to the SORN and PIA to cover the PII collected related to this information collection, as required by OMB's Memorandum M–03–22 (September 26, 2003) and by the Privacy Act, 5 U.S.C. 552a.

Needs and Uses: On January 13, 2012, in document FCC 12–9, the Commission released a *Report and Order* adopting final rules to implement sections 303, 330(b), and 713 of the Communications Act of 1934 (the Act), as amended by the ''Twenty-First Century Communications and Video Accessibility Act of 2010'' (CVAA). *See* Public Law 111–260, §§ 202 and 203. The Commission also released an Erratum thereto on January 30, 2012. Pursuant to Section 202 of the CVAA, the *Report and Order* adopts rules governing the closed captioning requirements for the owners, providers, and distributors of video programming delivered using Internet protocol (IP). Pursuant to Section 203 of the CVAA, the *Report and Order* adopts rules governing the closed captioning capabilities of certain apparatus on which consumers view video programming.

The following rule sections and other requirements contain revised information collection requirements for which the Commission is seeking approval from the Office of Management and Budget (OMB):

(a) 47 CFR 79.4(c)(1)(ii) and 47 CFR 79.4(c)(2)(ii) require video programming owners (VPOs) and video programming distributors and providers (VPDs) to agree upon a mechanism to inform VPDs on an ongoing basis whether video programming is subject to the IP closed captioning requirements. The Commission considered and rejected adopting a single specific mechanism that could impose greater information collection burdens on small businesses. 47 CFR 79.4(c)(2)(ii) requires VPDs to make a good faith effort to identify video programming subject to the IP closed captioning requirements using the agreed upon mechanism. A VPD may rely in good faith on a certification by a VPO that video programming need not be captioned if: (A) the certification includes a clear and concise explanation of why captioning is not required; and (B) the VPD is able to produce the certification to the Commission in the event of a complaint. VPDs may seek Commission determinations that other proposed mechanisms provide adequate information for them to rely on the mechanisms in good faith.

(b) 47 CFR 79.4(c)(2)(iii) requires VPDs to make contact information available to end users for the receipt and handling of written IP closed captioning complaints. The contact information required for written complaints shall include the name of a person with primary responsibility for IP captioning issues and who can ensure compliance with the IP closed captioning rules. In addition, this contact information shall include the person's title or office, telephone number, fax number, postal mailing address, and email address. VPDs must keep this information current and update it within 10 business days of any change.

(c) 47 CFR 79.4(d)(1) permits VPOs and VPDs to petition the Commission for a full or partial exemption from the IP closed captioning requirements, which the Commission may grant upon a finding that the requirements would be economically burdensome. 47 CFR 79.4(d)(2) requires the petitioner to support a petition for exemption with sufficient evidence to demonstrate that compliance with the requirements for closed captioning of IP-delivered video programming would be economically burdensome. The term ''economically burdensome'' means imposing significant difficulty or expense. The Commission will consider the following factors when determining whether the requirements for closed captioning of IP-delivered video programming would be economically burdensome: (i) the nature and cost of the closed captions for the programming; (ii) the impact on the operation of the VPD or VPO; (iii) the financial resources of the VPD or VPO; and (iv) the type of operations of the VPD or VPO. 47 CFR 79.4(d)(3) provides that, in addition to these factors, the petitioner must describe any other factors it deems relevant to the Commission's final determination and any available alternatives that might constitute a reasonable substitute for the

IP closed captioning requirements including, but not limited to, text or graphic display of the content of the audio portion of the programming. The Commission will evaluate economic burden with regard to the individual outlet. 47 CFR 79.4(d)(4) requires the petitioner to electronically file its petition for exemption, and all subsequent pleadings related to the petition. 47 CFR 79.4(d)(6) permits any interested person to electronically file comments or oppositions to the petition within 30 days after release of the public notice of the petition. Within 20 days after the close of the period for filing comments or oppositions, the petitioner may reply to any comments or oppositions filed. 47 CFR 79.4(d)(7) requires persons who file comments or oppositions to the petition to serve the petitioner with copies of those comments or oppositions and to include a certification that the petitioner was served with a copy. Any petitioner filing a reply to comments or oppositions must serve the commenting or opposing party with a copy of the reply and must include a certification that the party was served with a copy.

Comments or oppositions and replies shall be served upon a party, its attorney, or its other duly constituted agent by delivering or mailing a copy to the party's last known address or by sending a copy to the email address last provided by the party, its attorney, or other duly constituted agent. 47 CFR 79.4(d)(8) provides that, upon a finding of good cause, the Commission may lengthen or shorten any comment period and waive or establish other procedural requirements. 47 CFR 79.4(d)(9) requires persons filing petitions and responsive pleadings to include a detailed, full showing, supported by affidavit, of any facts or considerations relied on. Overall, while there is some burden associated with requesting an exemption, when granted, an exemption will relieve the entity from complying with the IP closed captioning requirements.

(d) 47 CFR 79.4(e)(1) provides that complaints concerning an alleged violation of the IP closed captioning requirements shall be filed in writing with the Commission or with the VPD responsible for enabling the rendering or pass through of the closed captions for the video programming within sixty (60) days after the date the complainant experienced a problem with captioning. A complaint filed with the Commission must be directed to the Consumer and Governmental Affairs Bureau and submitted through the Commission's online informal complaint filing system, U.S. Mail, overnight delivery, or facsimile. 47 CFR 79.4(e)(2) sets forth certain information that a complaint should include. 47 CFR 79.4(e)(3) states that, if a complaint is filed first with the Commission, the Commission will forward complaints satisfying the above requirements to the named VPD and/or VPO, as well as to any other VPD and/or VPO that Commission staff determines may be involved. The VPD and/or VPO must respond in writing to the Commission and the complainant within 30 days after receipt of the complaint from the Commission. 47 CFR 79.4(e)(4) states that, if a complaint is filed first with the VPD, the VPD must respond in writing to the complainant within thirty (30) days after receipt of a closed captioning complaint. If a VPD fails to respond to the complainant within thirty (30) days, or the response does not satisfy the consumer, the complainant may file the complaint with the Commission within thirty (30) days after the time allotted for the VPD to respond. If a consumer re-files the complaint with the Commission and the complaint satisfies the above requirements, the Commission will forward the complaint to the named VPD, as well as to any other VPD and/or VPO that Commission staff determines may be involved. The VPD and/or VPO must then respond in writing to the Commission and the complainant within 30 days after receipt of the complaint from the Commission. 47 CFR 79.4(e)(5) requires VPDs and/or VPOs, in response to a complaint, to file with the Commission sufficient records and documentation to prove that the responding entity was (and remains) in compliance with the Commission's rules. If the responding entity admits that it was not or is not in compliance with the Commission's rules, it shall file with the Commission sufficient records and documentation to explain the reasons for its noncompliance, show what remedial steps it has taken or will take, and show why such steps have been or will be sufficient to remediate the problem. 47 CFR 79.4(d)(6) permits the Commission to request additional information from any relevant entities when, in the estimation of Commission staff, such information is needed to investigate the complaint or adjudicate potential violation(s) of Commission rules. When the Commission requests additional information, parties to which such requests are addressed must provide the requested information in the manner and within the time period the Commission specifies. Overall, while the complaint procedures impose an information collection burden, the requirement for VPDs to publish contact information, described above, and to respond to consumer complaints provides an opportunity for VPDs to resolve complaints without Commission involvement.

(e) Under the CVAA, the requirements of Section 203 only apply to the extent they are ''technically feasible.'' Parties may raise technical infeasibility as a defense to a complaint or, alternatively, may file a request for a ruling under Section 1.41 of the Commission's rules before manufacturing or importing the product.

(f) 47 CFR 79.103(b)(3)(i) permits manufacturers of apparatus that use a picture screen of less than 13 inches in size to petition the Commission for a full or partial exemption from the closed captioning requirements pursuant to Section 1.41 of the Commission's rules, which the Commission may grant upon a finding that the requirements are not achievable. Such manufacturers may also assert that such apparatus is fully or partially exempt as a response to a complaint, which the Commission may dismiss upon a finding that the requirements are not achievable. 47 CFR 79.103(b)(3)(ii) requires the petitioner or respondent to support a petition for exemption or a response to a complaint with sufficient evidence to demonstrate that compliance with the requirements is not ''achievable'' where ''achievable'' means with reasonable effort or expense. The rule further sets forth certain factors that the Commission will consider when determining whether the requirements are not ''achievable.''

(g) 47 CFR 79.103(b)(4) permits manufacturers of apparatus to petition the Commission for a full or partial waiver of the closed captioning requirements, which the Commission may grant upon a finding that the apparatus meets one of the following provisions: (i) The apparatus is primarily designed for activities other than receiving or playing back video programming transmitted simultaneously with sound; or (ii) The apparatus is designed for multiple purposes, capable of receiving or playing back video programming transmitted simultaneously with sound but whose essential utility is derived from other purposes.

(h) The *Report and Order* also established procedures for the filing of written complaints alleging violations of the Commission's rules requiring apparatus designed to receive, play back, or record video programming to be equipped with built-in closed caption decoder circuitry or capability designed to display closed captions. The Commission set forth information that such complaints should include. A

written complaint filed with the Commission must be transmitted to the Consumer and Governmental Affairs Bureau through the Commission's online informal complaint filing system, U.S. Mail, overnight delivery, or facsimile. The Commission may forward such complaints to the named manufacturer or provider, as well as to any other entity that Commission staff determines may be involved, and may request additional information from any relevant parties when, in the estimation of Commission staff, such information is needed to investigate the complaint or adjudicate potential violations of Commission rules.

Federal Communications Commission.

Marlene H. Dortch,

Secretary.

[FR Doc. 2012–7601 Filed 3–29–12; 8:45 am]

BILLING CODE 6712–01–P

FEDERAL RESERVE SYSTEM

Change in Bank Control Notices; Acquisitions of Shares of a Bank or Bank Holding Company

The notificants listed below have applied under the Change in Bank Control Act (12 U.S.C. 1817(j)) and § 225.41 of the Board's Regulation Y (12 CFR 225.41) to acquire shares of a bank or bank holding company. The factors that are considered in acting on the notices are set forth in paragraph 7 of the Act (12 U.S.C. 1817(j)(7)).

The notices are available for immediate inspection at the Federal Reserve Bank indicated. The notices also will be available for inspection at the offices of the Board of Governors. Interested persons may express their views in writing to the Reserve Bank indicated for that notice or to the offices of the Board of Governors. Comments must be received not later than April 16, 2012.

A. Federal Reserve Bank of Atlanta (Chapelle Davis, Assistant Vice President) 1000 Peachtree Street NE., Atlanta, Georgia 30309:

1. *Ander P. and Sandra G. Gibbs,* Dade City, Florida; to acquire convertible nonvoting preferred shares of Florida Bancshares, Inc., and thereby indirectly acquire control of First National Bank of Pasco, both in Dade City, Florida.

B. Federal Reserve Bank of Chicago (Colette A. Fried, Assistant Vice President) 230 South LaSalle Street, Chicago, Illinois 60690–1414:

1. *Frank A. Peplinski, David Peplinski, Jerry Pelinksi, Terry Peplinski, Lynda Watchowski, Lauren Peplinski, Crystal Stomack, Nicole Peplinski, Brandon Watchowski,* all of Ubly, Michigan, and certain of their minor children as a group acting in concert, to retain voting shares of Northstar Financial Group, Inc., and thereby indirectly retain control of Northstar Bank, both in Bad Axe, Michigan, and Seaway Community Bank, St. Clair, Michigan. In addition, Jerry Peplinski, as trustee of the Peplinski Family 2012 Trust, and The Peplinksi Family 2012 Trust will acquire shares of Northstar Financial Group, and thereby become a member of the Peplinski Family Group.

2. *Lynette Drake, individually, Maria Roberts, Maria Roberts, as trustee of the Ryan J. Roberts Trust, the Ryan J. Roberts Trust, Jeffrey Roberts, and Austin Drake,* all of Bad Axe, Michigan, and certain of their minor children as a group acting in concert, to retain voting shares of Northstar Financial Group, Inc., and thereby indirectly retain control of Northstar Bank, both in Bad Axe, Michigan, and Seaway Community Bank, St. Clair, Michigan. In addition, Lynette Drake, as trustee of the Roberts Family, 2012 Trust, and the Roberts Family 2012 Trust, will acquire shares of Northstar Financial Group, Inc., and thereby become a member of the Roberts Family Control Group.

Board of Governors of the Federal Reserve System, March 27, 2012.

Jennifer J. Johnson,

Secretary of the Board.

[FR Doc. 2012–7673 Filed 3–29–12; 8:45 am]

BILLING CODE 6210–01–P

FEDERAL RESERVE SYSTEM

Formations of, Acquisitions by, and Mergers of Bank Holding Companies

The companies listed in this notice have applied to the Board for approval, pursuant to the Bank Holding Company Act of 1956 (12 U.S.C. 1841 *et seq.*) (BHC Act), Regulation Y (12 CFR Part 225), and all other applicable statutes and regulations to become a bank holding company and/or to acquire the assets or the ownership of, control of, or the power to vote shares of a bank or bank holding company and all of the banks and nonbanking companies owned by the bank holding company, including the companies listed below.

The applications listed below, as well as other related filings required by the Board, are available for immediate inspection at the Federal Reserve Bank indicated. The applications will also be available for inspection at the offices of the Board of Governors. Interested persons may express their views in writing on the standards enumerated in the BHC Act (12 U.S.C. 1842(c)). If the proposal also involves the acquisition of a nonbanking company, the review also includes whether the acquisition of the nonbanking company complies with the standards in section 4 of the BHC Act (12 U.S.C. 1843). Unless otherwise noted, nonbanking activities will be conducted throughout the United States.

Unless otherwise noted, comments regarding each of these applications must be received at the Reserve Bank indicated or the offices of the Board of Governors not later than April 26, 2012.

A. Federal Reserve Bank of Atlanta (Chapelle Davis, Assistant Vice President) 1000 Peachtree Street NE., Atlanta, Georgia 30309:

1. *Ategra Capital Partners I, LLC,* Vienna, Virginia; to become a bank holding company by acquiring at least 87 percent of the preferred shares of Florida Bancshares, Inc., and its subsidiary, First National Bank of Pasco, both in Dade City, Florida. The preferred shares are convertible to approximately 27.8 percent of the voting shares.

Board of Governors of the Federal Reserve System, March 27, 2012.

Jennifer J. Johnson,

Secretary of the Board.

[FR Doc. 2012–7674 Filed 3–29–12; 8:45 am]

BILLING CODE 6210–01–P

DEPARTMENT OF DEFENSE

GENERAL SERVICES ADMINISTRATION

NATIONAL AERONAUTICS AND SPACE ADMINISTRATION

[OMB Control No. 9000–0010; Docket 2011–0079; Sequence 24]

Federal Acquisition Regulation; Submission for OMB Review; Progress Payments (SF–1443)

AGENCY: Department of Defense (DOD), General Services Administration (GSA), and National Aeronautics and Space Administration (NASA).

ACTION: Notice of request for public comments regarding an extension to an existing OMB clearance.

SUMMARY: Under the provisions of the Paperwork Reduction Act, the Regulatory Secretariat will be submitting to the Office of Management and Budget (OMB) a request to review and approve an extension of a previously information collection requirement concerning progress payments. A notice was published in

the **Federal Register** at 76 FR 81942, on December 29, 2011. No comments were received.

Public comments are particularly invited on: Whether this collection of information is necessary for the proper performance of functions of the Federal Acquisition Regulation (FAR), and whether it will have practical utility; whether our estimate of the public burden of this collection of information is accurate, and based on valid assumptions and methodology; ways to enhance the quality, utility, and clarity of the information to be collected; and ways in which we can minimize the burden of the collection of information on those who are to respond, through the use of appropriate technological collection techniques or other forms of information technology.

DATES: Submit comments on or before April 30, 2012.

ADDRESSES: Submit comments identified by Information Collection 9000–0010, Progress Payments, by any of the following methods:

- *Regulations.gov: http://www.regulations.gov.* Submit comments via the Federal eRulemaking portal by inputting ''Information Collection 9000–0010, Progress Payments'' under the heading ''Enter Keyword or ID'' and selecting ''Search''. Select the link ''Submit a Comment'' that corresponds with ''Information Collection 9000–0010, Progress Payments''. Follow the instructions provided at the ''Submit a Comment'' screen. Please include your name, company name (if any), and ''Information Collection 9000–0010, Progress Payments'' on your attached document.
- *Fax:* 202–501–4067.
- *Mail:* General Services Administration, Regulatory Secretariat (MVCB), 1275 First Street NE., Washington, DC 20417. ATTN: Hada Flowers/IC 9000–0010, Progress Payments.

Instructions: Please submit comments only and cite Information Collection 9000–0010, Progress Payments, in all correspondence related to this collection. All comments received will be posted without change to *http://www.regulations.gov,* including any personal and/or business confidential information provided.

FOR FURTHER INFORMATION CONTACT: Edward Chambers, Procurement Analyst, Federal Acquisition Policy Division, at (202) 501–3221 or *Edward.chambers@gsa.gov.*

SUPPLEMENTARY INFORMATION:

A. Purpose

Certain Federal contracts provide for progress payments to be made to the contractor during performance of the contract. Pursuant to FAR clause 52.232–16 ''Progress Payments,'' contractors are required to request progress payments on Standard Form 1443, ''Contractor's Request for Progress Payment,'' or an agency approved electronic equivalent. Additionally, contractors may be required to submit reports, certificates, financial statements, and other pertinent information, reasonably requested by the Contracting Officer. The contractual requirement for submission of reports, certificates, financial statements and other pertinent information is necessary for protection of the Government against financial loss through the making of progress payments.

B. Annual Reporting Burden

Respondents: 27,000.
Responses per Respondent: 32.
Annual Responses: 864,000.
Hours per Response: .55.
Total Burden Hours: 475,200.
Obtaining Copies of Proposals: Requesters may obtain a copy of the information collection documents from the General Services Administration, Regulatory Secretariat (MVCB), 1275 First Street NE., Washington, DC 20417, telephone (202) 501–4755. Please cite OMB Control No. 9000–0010, Progress Payments, in all correspondence.

Dated: March 20, 2012.

Laura Auletta,

Director, Office of Governmentwide Acquisition Policy, Office of Acquisition Policy, Office of Governmentwide Policy.

[FR Doc. 2012–7655 Filed 3–29–12; 8:45 am]

BILLING CODE 6820–EP–P

DEPARTMENT OF HEALTH AND HUMAN SERVICES

Centers for Medicare & Medicaid Services

[CMS–4164–PN]

Medicare Program; Renewal of Deeming Authority of the Utilization Review Accreditation Commission for Medicare Advantage Health Maintenance Organizations and Local Preferred Provider Organizations

AGENCY: Centers for Medicare & Medicare Services (CMS), HHS.

ACTION: Proposed notice.

SUMMARY: This notice announces our proposal to renew the Medicare Advantage ''deeming authority'' of the Utilization Review Accreditation Commission (URAC) for Health Maintenance Organizations and Preferred Provider Organizations for a term of 6 years. This new term of approval would begin May 26, 2012 and end May 25, 2018. This notice announces a 30-day period for public comments on the renewal of the application.

DATES: To be assured consideration, comments must be received at one of the addresses provided below, no later than 5 p.m. on April 30, 2012.

ADDRESSES: In commenting, please refer to file code CMS–4164–PN. Because of staff and resource limitations, we cannot accept comments by facsimile (FAX) transmission.

You may submit comments in one of four ways (please choose only one of the ways listed):

1. *Electronically.* You may submit electronic comments on this regulation to *http://www.regulations.gov.* Follow the ''Submit a comment'' instructions.

2. *By regular mail.* You may mail written comments to the following address ONLY: Centers for Medicare & Medicaid Services, Department of Health and Human Services, Attention: CMS–4164–PN, P.O. Box 8016, Baltimore, MD 21244–8016.

Please allow sufficient time for mailed comments to be received before the close of the comment period.

3. *By express or overnight mail.* You may send written comments to the following address ONLY: Centers for Medicare & Medicaid Services, Department of Health and Human Services, Attention: CMS–4164–PN, Mail Stop C4–26–05, 7500 Security Boulevard, Baltimore, MD 21244–1850.

4. *By hand or courier.* If you prefer, you may deliver (by hand or courier) your written comments before the close of the comment period to either of the following addresses:

a. For delivery in Washington, DC—Centers for Medicare & Medicaid Services, Department of Health and Human Services, Room 445–G, Hubert H. Humphrey Building, 200 Independence Avenue SW., Washington, DC 20201.

(Because access to the interior of the Hubert H. Humphrey Building is not readily available to persons without Federal government identification, commenters are encouraged to leave their comments in the CMS drop slots located in the main lobby of the building. A stamp-in clock is available for persons wishing to retain a proof of filing by stamping in and retaining an extra copy of the comments being filed.)

b. For delivery in Baltimore, MD—Centers for Medicare & Medicaid

Services, Department of Health and Human Services, 7500 Security Boulevard, Baltimore, MD 21244–1850.

If you intend to deliver your comments to the Baltimore address, please call telephone number (410) 786–7195 in advance to schedule your arrival with one of our staff members.

Comments mailed to the addresses indicated as appropriate for hand or courier delivery may be delayed and received after the comment period.

FOR FURTHER INFORMATION CONTACT: Caroline Baker, (410) 786–0116 or Edgar Gallardo, (410) 786–0361.

SUPPLEMENTARY INFORMATION:

Inspection of Public Comments: All comments received before the close of the comment period are available for viewing by the public, including any personally identifiable or confidential business information that is included in a comment. We post all comments received before the close of the comment period on the following Web site as soon as possible after they have been received: *http://www.regulations.gov.* Follow the search instructions on that Web site to view public comments.

Comments received timely will also be available for public inspection as they are received, generally beginning approximately 3 weeks after publication of a document, at the headquarters of the Centers for Medicare & Medicaid Services, 7500 Security Boulevard, Baltimore, Maryland 21244, Monday through Friday of each week from 8:30 a.m. to 4 p.m. To schedule an appointment to view public comments, phone 1–800–743–3951.

I. Background

Under the Medicare program, eligible beneficiaries may receive covered services through a Medicare Advantage (MA) organization that contracts with CMS. The regulations specifying the Medicare requirements that must be met for a Medicare Advantage Organization (MAO) to enter into a contract with CMS are located at 42 CFR part 422. These regulations implement Part C of Title XVIII of the Social Security Act (the Act), which specifies the services that an MAO must provide and the requirements that the organization must meet to be an MA contractor. Other relevant sections of the Act are Parts A and B of Title XVIII and Part A of Title XI pertaining to the provision of services by Medicare certified providers and suppliers. Generally, for an entity to be an MA organization, the organization must be licensed by the State as a risk bearing organization as set forth in part 422.

As a method of assuring compliance with certain Medicare requirements, an MA organization may choose to become accredited by a CMS approved accrediting organization (AO). By virtue of its accreditation by a CMS-approved AO, the MA organization can be ''deemed'' compliant in one or more of six requirements set forth in section 1852(e)(4)(B) of the Act. For CMS to recognize an AO's accreditation program as establishing an MA plan's compliance with our requirements, the AO must prove to CMS that their standards are at least as stringent as Medicare requirements. MA organizations that are licensed as health maintenance organizations (HMOs) or preferred provider organizations (PPOs) and are accredited by an approved accrediting organization may receive, at their request, ''deemed'' status for CMS requirements with respect to the following six MA criteria: Quality Improvement; Antidiscrimination; Access to Services; Confidentiality and Accuracy of Enrollee Records; Information on Advanced Directives; and Provider Participation Rules. (*See* § 422.156(b)). At this time, recognition of accreditation does not include the Part D areas of review set out at § 423.165(b). AOs that apply for MA deeming authority are generally recognized by the health care industry as entities that accredit HMOs and PPOs. As we specify at § 422.157(b)(2)(ii) the term for which an AO may be approved by CMS may not exceed 6 years. For continuing approval, the AO must apply to CMS to renew their ''deeming authority'' for a subsequent approval period.

The Utilization Review Accreditation Commission (URAC) was approved as a CMS approved accreditation organization for MA deeming of HMOs on May 26, 2006, and that term will expire on May 26, 2012. On December 9, 2011, URAC submitted an application to renew its deeming authority. On that same date, URAC submitted materials requested from CMS which included updates and/or changes to items set out in Federal regulations at § 422.158(a) that are prerequisites for receiving approval of its accreditation program from CMS, and which were furnished to CMS by URAC as a part of their renewal applications for HMOs and PPOs.

II. Provisions of the Proposed Notice

The purpose of this notice is to notify the public of URAC's request to renew its Medicare Advantage ''deeming authority'' for HMOs and PPOs. URAC submitted all the necessary materials (including its standards and monitoring protocol) to enable us to make a determination concerning its request for approval as an accreditation organization for CMS. This renewal application was determined to be complete on February 6, 2012. Under section 1852(e)(4) of the Act and § 422.158 (Federal review of accrediting organizations), our review and evaluation of URAC will be conducted in accordance with our regulations, and will include but not necessarily be limited to the following components:

A. Components of the Review Process

- The types of MA plans that it would review as part of its accreditation process.
- A detailed comparison of the organization's accreditation requirements and standards with the Medicare requirements (for example, a crosswalk).
- Detailed information about the organization's survey process, including the following—

++ Frequency of surveys and whether surveys are announced or unannounced.

++ Copies of survey forms, and guidelines and instructions to surveyors.

++ Descriptions of—

—The survey review process and the accreditation status decision making process;

—The procedures used to notify accredited MA organizations of deficiencies and to monitor the correction of those deficiencies; and

—The procedures used to enforce compliance with accreditation requirements.

- Detailed information about the individuals who perform surveys for the accreditation organization, including the following—

++ The size and composition of accreditation survey teams for each type of plan reviewed as part of the accreditation process;

++ The education and experience requirements surveyors must meet;

++ The content and frequency of the in-service training provided to survey personnel;

++ The evaluation systems used to monitor the performance of individual surveyors and survey teams; and

++ The organization's policies and practice with respect to the participation, in surveys or in the accreditation decision process by an individual who is professionally or financially affiliated with the entity being surveyed.

- A description of the organization's data management and analysis system with respect to its surveys and accreditation decisions, including the kinds of reports, tables, and other displays generated by that system.

• A description of the organization's procedures for responding to and investigating complaints against accredited organizations, including policies and procedures regarding coordination of these activities with appropriate licensing bodies and ombudsmen programs.

• A description of the organization's policies and procedures with respect to the withholding or removal of accreditation for failure to meet the accreditation organization's standards or requirements, and other actions the organization takes in response to noncompliance with its standards and requirements.

• A description of all types (for example, full, partial) and categories (for example, provisional, conditional, temporary) of accreditation offered by the organization, the duration of each type and category of accreditation and a statement identifying the types and categories that would serve as a basis for accreditation if CMS approves the accreditation organization.

• A list of all currently accredited MA organizations and the type, category, and expiration date of the accreditation held by each of them.

• A list of all full and partial accreditation surveys scheduled to be performed by the accreditation organization as requested by CMS.

• The name and address of each person with an ownership or control interest in the accreditation organization.

• We will also consider URAC's past performance in the deeming program and results of recent deeming validation reviews, or look-behind audits conducted as part of continuing Federal oversight of the deeming program under § 422.157(d).

B. Notice Upon Completion of Evaluation

Upon completion of our evaluation, including evaluation of comments received as a result of this notice, we will publish a notice in the **Federal Register** announcing the result of our evaluation.

Section 1852(e)(4)(C) of the Act provides a statutory timetable to ensure that our review of deeming applications is conducted in a timely manner. The Act provides us with 210 calendar days after the date of receipt of an application to complete our survey activities and application review process. At the end of the 210 day period, we must publish an approval or denial of the application in the **Federal Register**.

III. Collection of Information Requirements

This document does not impose information collection and recordkeeping requirements. Consequently, it need not be reviewed by the Office of Management and Budget under the authority of the Paperwork Reduction Act of 1995.

IV. Response to Comments

Because of the large number of public comments we normally receive on **Federal Register** documents, we are not able to acknowledge or respond to them individually. We will consider all comments we receive by the date and time specified in the **DATES** section of this preamble, and, when we proceed with a subsequent document, we will respond to the comments in the preamble to that document.

Authority: Section 1865 of the Social Security Act (42 U.S.C. 1395bb).

(Catalog of Federal Domestic Assistance Program No. 93.773 Medicare—Hospital Insurance Program; and No. 93.774, Medicare-Supplementary Medical Insurance Program)

Dated: March 23, 2012.

Marilyn Tavenner,

Acting CMS Administrator, Centers for Medicare & Medicaid Services.

[FR Doc. 2012–7699 Filed 3–29–12; 8:45 am]

BILLING CODE 4120–01–P

DEPARTMENT OF HEALTH AND HUMAN SERVICES

Centers for Medicare & Medicaid Services

[CMS–4166–PN]

Medicare and Medicaid Programs; Renewal of Deeming Authority of the Accreditation Association for Ambulatory Health Care, Inc. for Medicare Advantage Health Maintenance Organizations and Local Preferred Provider Organizations

AGENCY: Centers for Medicare & Medicaid Services (CMS), HHS.

ACTION: Proposed notice.

SUMMARY: This notice announces our proposal to renew the Medicare Advantage ''deeming authority'' of the Accreditation Association for Ambulatory Health Care, Inc. (AAAHC) for Health Maintenance Organizations and Preferred Provider Organizations for a term of 6 years. This new term of approval would begin July 11, 2012, and end July 10, 2018. This notice announces a 30-day period for public comments on the renewal of the application.

DATES: To be assured consideration, comments must be received at one of the addresses provided below, no later than 5 p.m. on April 30, 2012.

ADDRESSES: In commenting, please refer to file code CMS–4166–PN. Because of staff and resource limitations, we cannot accept comments by facsimile (FAX) transmission.

You may submit comments in one of four ways (please choose only one of the ways listed):

1. *Electronically.* You may submit electronic comments on this regulation to *http://www.regulations.gov.* Follow the ''Submit a comment'' instructions.

2. *By regular mail.* You may mail written comments to the following address ONLY: Centers for Medicare & Medicaid Services, Department of Health and Human Services, Attention: CMS–4166–PN, P.O. Box 8016, Baltimore, MD 21244–8016.

Please allow sufficient time for mailed comments to be received before the close of the comment period.

3. *By express or overnight mail.* You may send written comments to the following address ONLY: Centers for Medicare & Medicaid Services, Department of Health and Human Services, Attention: CMS–4166–PN, Mail Stop C4–26–05, 7500 Security Boulevard, Baltimore, MD 21244–1850.

4. *By hand or courier.* If you prefer, you may deliver (by hand or courier) your written comments before the close of the comment period to either of the following addresses:

a. For delivery in Washington, DC—Centers for Medicare & Medicaid Services, Department of Health and Human Services, Room 445–G, Hubert H. Humphrey Building, 200 Independence Avenue SW., Washington, DC 20201.

(Because access to the interior of the Hubert H. Humphrey Building is not readily available to persons without Federal government identification, commenters are encouraged to leave their comments in the CMS drop slots located in the main lobby of the building. A stamp-in clock is available for persons wishing to retain a proof of filing by stamping in and retaining an extra copy of the comments being filed.)

b. For delivery in Baltimore, MD—Centers for Medicare & Medicaid Services, Department of Health and Human Services, 7500 Security Boulevard, Baltimore, MD 21244–1850.

If you intend to deliver your comments to the Baltimore address, please call telephone number (410) 786–0361 in advance to schedule your arrival with one of our staff members.

Comments mailed to the addresses indicated as appropriate for hand or courier delivery may be delayed and received after the comment period.

FOR FURTHER INFORMATION CONTACT: Caroline Baker, (410) 786–0116; or Edgar Gallardo, (410) 786–0361.

SUPPLEMENTARY INFORMATION:

Inspection of Public Comments: All comments received before the close of the comment period are available for viewing by the public, including any personally identifiable or confidential business information that is included in a comment. We post all comments received before the close of the comment period on the following Web site as soon as possible after they have been received: *http://www.regulations.gov.* Follow the search instructions on that Web site to view public comments.

Comments received timely will also be available for public inspection as they are received, generally beginning approximately 3 weeks after publication of a document, at the headquarters of the Centers for Medicare & Medicaid Services, 7500 Security Boulevard, Baltimore, Maryland 21244, Monday through Friday of each week from 8:30 a.m. to 4 p.m. To schedule an appointment to view public comments, phone 1–800–743–3951.

I. Background

Under the Medicare program, eligible beneficiaries may receive covered services through a Medicare Advantage (MA) organization that contracts with CMS. The regulations specifying the Medicare requirements that must be met for a Medicare Advantage Organization (MAO) to enter into a contract with CMS are located at 42 CFR part 422. These regulations implement Part C of Title XVIII of the Social Security Act (the Act), which specifies the services that an MAO must provide and the requirements that the organization must meet to be an MA contractor. Other relevant sections of the Act are Parts A and B of Title XVIII and Part A of Title XI pertaining to the provision of services by Medicare-certified providers and suppliers. Generally, for an entity to be an MA organization, the organization must be licensed by the State as a risk-bearing organization as set forth in part 422.

As a method of assuring compliance with certain Medicare requirements, an MA organization may choose to become accredited by a CMS-approved accrediting organization (AO). Once accredited by such a CMS-approved AO, we deem the MA organization to be compliant in one or more of six requirements set forth in section 1852(e)(4)(B) of the Act. For an AO to be able to ''deem'' an MA plan as compliant with these MA requirements, the AO must prove to CMS that its standards are at least as stringent as Medicare requirements. Health maintenance organizations (HMOs) or preferred provider organizations (PPOs) accredited by an approved accrediting organization may receive, at their request, ''deemed'' status for CMS requirements with respect to the following six MA criteria: Quality Improvement; Antidiscrimination; Access to Services; Confidentiality and Accuracy of Enrollee Records; Information on Advanced Directives; and Provider Participation Rules. (*See* 42 CFR 422.156(b)). At this time, recognition of accreditation does not include the Part D areas of review set out at § 423.165(b). AOs that apply for MA deeming authority are generally recognized by the health care industry as entities that accredit HMOs and PPOs. As we specify at § 422.157(b)(2)(ii), the term for which an AO may be approved by CMS may not exceed 6 years. For continuing approval, the AO must apply to CMS to renew its ''deeming authority'' for a subsequent approval period.

The Accreditation Association for Ambulatory Health Care, Inc. (AAAHC) was approved as a CMS-approved accreditation organization for MA HMOs and PPOs on July 12, 2006, and that term will expire on July 11, 2012. On December 14, 2011, AAAHC submitted an application to renew its deeming authority. On that same date, AAAHC submitted materials requested from CMS which included updates and/or changes to items set out in Federal regulations at § 422.158(a) that are prerequisites for receiving accreditation program approval by CMS, and which were furnished to CMS by AAAHC as a part of their renewal applications for HMOs and PPOs.

II. Provisions of the Proposed Notice

The purpose of this notice is to notify the public of the AAAHC's request to renew its Medicare Advantage deeming authority for HMOs and PPOs. AAAHC submitted all the necessary materials (including its standards and monitoring protocol) to enable us to make a determination concerning its request for approval as an accreditation organization for CMS. This renewal application was determined to be complete on February 6, 2012. Under section 1852(e)(4) of the Act and our regulations at § 422.158 (Federal review of accrediting organizations), our review and evaluation of AAAHC will include, but not necessarily be limited to, the following components:

A. Components of the Review Process

- The types of MA plans that it would review as part of its accreditation process.
- A detailed comparison of the organization's accreditation requirements and standards with the Medicare requirements (for example, a crosswalk).
- Detailed information about the organization's survey process, including the following—

++ Frequency of surveys and whether surveys are announced or unannounced.

++ Copies of survey forms, and guidelines and instructions to surveyors.

++ Descriptions of—

—The survey review process and the accreditation status decision making process;

—The procedures used to notify accredited MA organizations of deficiencies and to monitor the correction of those deficiencies; and

—The procedures used to enforce compliance with accreditation requirements.

- Detailed information about the individuals who perform surveys for the accreditation organization, including the following—

++ The size and composition of accreditation survey teams for each type of plan reviewed as part of the accreditation process;

++ The education and experience requirements surveyors must meet;

++ The content and frequency of the in-service training provided to survey personnel;

++ The evaluation systems used to monitor the performance of individual surveyors and survey teams; and

++ The organization's policies and practice with respect to the participation, in surveys or in the accreditation decision process by an individual who is professionally or financially affiliated with the entity being surveyed.

- A description of the organization's data management and analysis system with respect to its surveys and accreditation decisions, including the kinds of reports, tables, and other displays generated by that system.
- A description of the organization's procedures for responding to and investigating complaints against accredited organizations, including policies and procedures regarding coordination of these activities with appropriate licensing bodies and ombudsmen programs.
- A description of the organization's policies and procedures with respect to

the withholding or removal of accreditation for failure to meet the accreditation organization's standards or requirements, and other actions the organization takes in response to noncompliance with its standards and requirements.

- A description of all types (for example, full, partial) and categories (for example, provisional, conditional, temporary) of accreditation offered by the organization, the duration of each type and category of accreditation and a statement identifying the types and categories that would serve as a basis for accreditation if CMS approves the accreditation organization.
- A list of all currently accredited MA organizations and the type, category, and expiration date of the accreditation held by each of them.
- A list of all full and partial accreditation surveys scheduled to be performed by the accreditation organization as requested by CMS.
- The name and address of each person with an ownership or control interest in the accreditation organization.
- CMS will also consider AAAHC's past performance in the deeming program and results of recent deeming validation reviews, or look-behind audits conducted as part of continuing Federal oversight of the deeming program under § 422.157(d).

B. Notice Upon Completion of Evaluation

Upon completion of our evaluation, including evaluation of comments received as a result of this notice, we will publish a notice in the **Federal Register** announcing the result of our evaluation.

Section 1852(e)(4)(C) of the Act provides a statutory timetable to ensure that our review of deeming applications is conducted in a timely manner. The Act provides us with 210 calendar days after the date of receipt of an application to complete our survey activities and application review process. At the end of the 210 day period, we must publish an approval or denial of the application in the **Federal Register**.

III. Collection of Information Requirements

This document does not impose information collection and recordkeeping requirements. Consequently, it need not be reviewed by the Office of Management and Budget under the authority of the Paperwork Reduction Act of 1995.

IV. Response to Comments

Because of the large number of public comments we normally receive on **Federal Register** documents, we are not able to acknowledge or respond to them individually. We will consider all comments we receive by the date and time specified in the **DATES** section of this preamble, and, when we proceed with a subsequent document, we will respond to the comments in the preamble to that document.

(Catalog of Federal Domestic Assistance Program No. 93.773 Medicare-Hospital Insurance Program; and No. 93.774, Medicare-Supplementary Medical Insurance Program)

Dated: March 23, 2012.

Marilyn Tavenner,

Acting CMS Administrator, Centers for Medicare & Medicaid Services.

[FR Doc. 2012–7701 Filed 3–29–12; 8:45 am]

BILLING CODE 4120–01–P

DEPARTMENT OF HEALTH AND HUMAN SERVICES

Administration for Children and Families

Submission for OMB Review; Comment Request

Title: Protection and Advocacy (P&A) Voting Access Annual Report.

OMB No.: 0970–0326.

Description: This is a revision of the annual report for the previously cleared Help America Vote Act (HAVA) Annual report.

By Federal statute (the Help America Vote Act (HAVA) of 2002, Public Law 107–252, Section 265(b), Reports, 42 U.S.C. 15461) the governing agency is mandated to submit a report to the Committee on House Administration of the House of Representatives and the Committee on Rules and Administration of the Senate. As a result of the mandate, each State Protection & Advocacy (P&A) System receiving funds and activities carried out under HAVA Section 291 are requested to prepare an annual in accordance with the grant terms and conditions. The purpose of the annual report is to obtain information from each state/territory to use in the Congressional report submitted by the Secretary of the U.S. Department of Health and Human Services.

Respondents: Protection & Advocacy Systems—All States, the District of Columbia, Puerto Rico, the U.S. Virgin Islands, American Samoa, and Guam.

ANNUAL BURDEN ESTIMATES

Instrument	Number of respondents	Number of responses per respondent	Average burden hours per response	Total burden hours
Protection and Advocacy (P&A) Voting Access Annual Report	55	1	20	1,100

Estimated Total Annual Burden Hours: 1,100.

Additional Information: Copies of the proposed collection may be obtained by writing to the Administration for Children and Families, Office of Planning, Research and Evaluation, 370 L'Enfant Promenade SW., Washington, DC 20447, Attn: ACF Reports Clearance Officer. All requests should be identified by the title of the information collection. Email address: *infocollection@acf.hhs.gov.*

OMB Comment: OMB is required to make a decision concerning the collection of information between 30 and 60 days after publication of this document in the **Federal Register**. Therefore, a comment is best assured of having its full effect if OMB receives it within 30 days of publication. Written comments and recommendations for the proposed information collection should be sent directly to the following: Office of Management and Budget, Paperwork Reduction Project, Fax: 202–395–7285, Email: *OIRA_SUBMISSION@OMB.EOP.GOV,* Attn: Desk Officer for the Administration for Children and Families.

Robert Sargis,

Reports Clearance Officer.

[FR Doc. 2012–7708 Filed 3–29–12; 8:45 am]

BILLING CODE 4184–01–P

DEPARTMENT OF HEALTH AND HUMAN SERVICES

Food and Drug Administration

[Docket No. FDA–2012–N–0293]

Orthopaedic and Rehabilitation Devices Panel of the Medical Devices Advisory Committee; Meeting

AGENCY: Food and Drug Administration, HHS.

ACTION: Notice of meeting.

SUMMARY: This notice announces a forthcoming meeting of a public advisory committee of the Food and Drug Administration (FDA) to discuss current knowledge about the safety and effectiveness of Metal-on-Metal (MoM) hip arthroplasty systems. FDA is convening this committee to seek expert scientific and clinical opinion on the risks and benefits of these types of devices based on available scientific data. The meeting will be open to the public.

DATES: The meeting will be held on June 27 and 28, 2012, from 8 a.m. to 7 p.m. FDA is opening a docket to allow for public comments to be submitted to the Agency on the issues before the Orthopaedic and Rehabilitation Devices Panel of the Medical Devices Advisory Committee. Submit either electronic or written comments by May 9, 2012.

ADDRESSES: Meeting location is to be determined (TBD). Prior to the meeting, FDA will announce the meeting location in a future **Federal Register** notice. We will also provide the meeting location on FDA's Advisory Committee Information line, 1–800–741–8138 (301–443–0572 in the Washington, DC area) and on the Agency's Web site at *http://www.fda.gov/AdvisoryCommittees/Calendar/default.htm.*

FOR FURTHER INFORMATION CONTACT: Avena Russell, Center for Devices and Radiological Health, Food and Drug Administration, 10903 New Hampshire Ave., Bldg. 66, rm. 1535, Silver Spring, MD 20993–0002, 301–796–3805, *Avena.Russell@fda.hhs.gov,* or FDA Advisory Committee Information Line, 1–800–741–8138 (301–443–0572 in the Washington, DC area), and follow the prompts to the desired center or product area. Please call the Information Line for up-to-date information on this meeting. A notice in the **Federal Register** about last minute modifications that impact a previously announced advisory committee meeting cannot always be published quickly enough to provide timely notice. Therefore, you should always check the Agency's Web site and call the appropriate advisory committee hot line/phone line to learn about possible modifications before coming to the meeting.

SUPPLEMENTARY INFORMATION:

Name of Committee: Orthopaedic and Rehabilitation Devices Panel of the Medical Devices Advisory Committee.

General Function of the Committee: To provide advice and recommendations to the Agency on FDA's regulatory issues.

Agenda: On June 27 and 28, 2012, the committee will discuss current knowledge about the safety and effectiveness of Metal-on-Metal (MoM) hip arthroplasty systems. FDA is convening this committee to seek expert scientific and clinical opinion on the risks and benefits of these types of devices based on available scientific data.

Hip arthroplasty is intended to provide increased patient mobility and reduce pain by replacing the damaged hip joint articulation in patients where there is evidence of sufficient sound bone to seat and support the components.

There are two categories of metal-on-metal hip arthroplasty systems:

1. Metal-on-Metal total hip replacement (THR) systems consist of a metal ball (femoral head), a metal femoral stem in the thighbone, and a metal cup in the hip bone (acetabular component). MoM THR systems are typically indicated for use in total hip arthroplasty in skeletally mature patients with the following conditions:

a. Non-inflammatory degenerative joint disease (NIDJD) such as osteoarthritis, avascular necrosis, post-traumatic arthritis, ankylosis, protrusio acetabuli, and painful hip dysplasia;

b. Inflammatory degenerative joint disease such as rheumatoid arthritis;

c. Correction of functional deformity; and,

d. Revision procedures where other treatments or devices have failed.

2. Metal-on-Metal hip resurfacing systems consist of a trimmed femoral head capped with a metal covering and a metal cup in the hip bone (acetabular component). Hip resurfacing arthroplasty is intended for reduction or relief of pain and/or improved hip function in skeletally mature patients having the following conditions:

a. Non-inflammatory degenerative arthritis such as osteoarthritis, traumatic arthritis, avascular necrosis, or dysplasia/developmental dislocation of the hip (DDH); or

b. Inflammatory arthritis such as rheumatoid arthritis.

Resurfacing systems are intended for patients who, due to their relatively younger age or increased activity level, may not be suitable for traditional total hip arthroplasty due to an increased possibility of requiring ipsilateral hip joint revision.

In February 2011, FDA published a Web site on MoM total and resurfacing hip systems with information for orthopedic surgeons and for patients with or considering hip replacement (*http://www.fda.gov/MedicalDevices/ProductsandMedicalProcedures/ImplantsandProsthetics/MetalonMetalHipImplants/default.htm*).

Numerous recent publications, studies and registry reports have raised safety concerns for MoM THRs. In February 2012, the United Kingdom's (UK) Medicines and Healthcare products Regulatory Agency (MHRA) published a Medical Device Alert with updated advice on the management and monitoring of patients implanted with MoM hip systems recommending more aggressive followup of patients with larger THR systems (≥36 millimeter (mm)). Further information about actions taken by MHRA, with links to information about MoM hip implants for patients and healthcare professionals, is available on their Web site at *http://www.mhra.gov.uk/Safetyinformation/Generalsafetyinformationandadvice/Product-specificinformationandadvice/Product-specificinformationandadvice%E2%80%93M%E2%80%93T/Metal-on-metalhipimplants/index.htm.* (FDA has verified the Web site address, but we are not responsible for any subsequent changes to the Web site after this document publishes in the **Federal Register**.)

In December 2011, the American Academy of Orthopedic Surgeons (AAOS) published an overview on MoM hip systems (total and resurfacing) (Ref. 1). The AAOS overview provides a summary of clinical outcomes in patients with MoM hip systems in comparison to other bearing surface combinations, addresses patient, implant and surgical factors that may predict successful/unsuccessful outcomes of MoM hip systems and discusses the prevalence of adverse clinical problems from MoM hip systems in comparison to other bearing surface combinations. One item referenced in the report is the Australian registry, which reported higher revision rates for patients with implants that have large-diameter heads (≥28 mm) (Ref. 2).

While current data are highly suggestive that a large percentage of patients with MoM hip systems have successful outcomes, a recent scientific publication raised serious concerns about the failure rates of MoM hip

systems for the UK population (Ref. 3). This peer-reviewed journal article presented the following findings regarding primary MoM THR: (1) Increased failure rate at 5 years for MoM THR related to larger head sizes; (2) significantly higher risk for revision in female patients (Note: In the United States, labeling discourages use of MoM hips in females of child bearing age with warnings in MoM THR labeling and contraindications in MoM hip resurfacing labeling); and (3) revisions for dislocation in men with MoM replacements were slightly lower, showing some benefit to larger head sizes.

The committee will be asked to discuss the following as it pertains to these devices in the U.S. population: Device mechanisms of failure, metal ion testing, imaging methods, local and systemic complications, preoperative and postoperative patient risk factors, as well as clinical followup considerations for patients with MoM hip systems (total and resurfacing).

FDA intends to make background material available to the public no later than 2 business days before the meeting. If FDA is unable to post the background material on its Web site prior to the meeting, the background material will be made publicly available at the location of the advisory committee meeting, and the background material will be posted on FDA's Web site after the meeting. Background material is available at *http://www.fda.gov/AdvisoryCommittees/Calendar/default.htm.* Scroll down to the appropriate advisory committee link.

Procedure: FDA will work with affected industry, professional organizations, and societies that have an interest in the MoM hip arthroplasty systems and who wish to make a presentation separate from the general open public hearing; time slots on June 28, 2012, between approximately 9 a.m. and 10 a.m. Representatives from industry, professional organizations and societies interested in making formal presentations to the committee should notify the contact person on or before May 1, 2012.

Interested persons may present data, information, or views, orally or in writing, on issues pending before the committee. Written submissions may be made to the contact person on or before May 9, 2012. On June 27, 2012 oral presentations from the public will be scheduled between approximately 9 a.m. and 10 a.m. Those individuals interested in making formal oral presentations should notify the contact person and submit a brief statement of the general nature of the evidence or arguments they wish to present, the names and addresses of proposed participants, and an indication of the approximate time requested to make their presentation on or before May 1, 2012. Time allotted for each presentation may be limited. If the number of registrants requesting to speak is greater than can be reasonably accommodated during the scheduled open public hearing session, FDA may conduct a lottery to determine the speakers for the scheduled open public hearing session. The contact person will notify interested persons regarding their request to speak by May 2, 2012.

Comments: FDA is opening a docket to allow for public comments to be submitted to the Agency on the issues before the Orthopaedic and Rehabilitation Devices Panel of the Medical Devices Advisory Committee beginning on March 30, 2012, and closing on May 9, 2012. Interested persons are encouraged to use the docket to submit electronic or written comments regarding this meeting. Submit electronic comments to *http://www.regulations.gov.* Submit written comments to the Division of Dockets Management, Food and Drug Administration, 5630 Fishers Lane, rm. 1061, Rockville, MD 20852. It is only necessary to send one set of comments. Identify comments with the docket number found in brackets in the heading of this document. Received comments may be seen in the Divisions of Dockets Management between 9 a.m. and 4 p.m., Monday through Friday.

Persons attending FDA's advisory committee meetings are advised that the Agency is not responsible for providing access to electrical outlets.

FDA welcomes the attendance of the public at its advisory committee meetings and will make every effort to accommodate persons with physical disabilities or special needs. If you require special accommodations due to a disability, please contact James Clark, *James.Clark@fda.hhs.gov* or 301–796–5293 at least 7 days in advance of the meeting.

FDA is committed to the orderly conduct of its advisory committee meetings. Please visit our Web site at *http://www.fda.gov/AdvisoryCommittees/AboutAdvisoryCommittees/ucm111462.htm* for procedures on public conduct during advisory committee meetings.

Notice of this meeting is given under the Federal Advisory Committee Act (5 U.S.C. app. 2).

I. References

The following references have been placed on display in the Division of Dockets Management (see *Comments*) and may be seen by interested persons between 9 a.m. and 4 p.m., Monday through Friday. (FDA has verified the Web site addresses, but FDA is not responsible for any subsequent changes to the Web site after this document publishes in the **Federal Register**.)

1. American Academy of Orthopedic Surgeons, ''Modern Metal-on-Metal Hip Implants: A Technology Overview'' (July 15, 2011), accessed online at *http://www.aaos.org/research/overviews/Metal_On_Metal.pdf.*
2. Adelaide: Australian Orthopaedic Association, *Australian Orthopaedic Association National Joint Replacement Registry: Annual Report 2010,* 2010.
3. Smith, A.J., P. Dieppe, K. Vernon, et al., ''Failure Rates of Stemmed Metal-on-Metal Hip Replacements: Analysis of Data From the National Joint Registry of England and Wales,'' *Lancet* (March 13, 2012), accessed online at *http://www.thelancet.com/journals/lancet/article/PIIS0140–6736(12)60353-5/fulltext#article_upsell* (doi:10.1016/S0140–6736(12)60353–5).

Dated: March 27, 2012.

Leslie Kux,

Assistant Commissioner for Policy.

[FR Doc. 2012–7767 Filed 3–29–12; 8:45 am]

BILLING CODE 4160–01–P

DEPARTMENT OF HEALTH AND HUMAN SERVICES

Health Resources and Services Administration

National Advisory Council on Migrant Health; Notice of Meeting

In accordance with section 10(a)(2) of the Federal Advisory Committee Act (Pub. L. 92–463), notice is hereby given of the following meeting:

Name: National Advisory Council on Migrant Health.

Dates and Times: May 7, 2012, 8:30 a.m. to 5 p.m., May 8, 2012, 8:30 a.m. to 5 p.m.

Place: Westin Denver Downtown Hotel, 1672 Lawrence Street, Denver, Colorado 80202. *Telephone:* (303) 572–9100.

Fax: (303) 572–7288.

Status: The meeting will be open to the public.

Purpose: The purpose of the meeting is to discuss services and issues related to the health of migrant and seasonal farmworkers and their families and to formulate recommendations for the Secretary of Health and Human Services.

Agenda: The agenda includes an overview of the National Advisory Council on Migrant Health's (The Council) general business activities. The Council will also hear presentations from experts on farmworker

issues, including the status of farmworker health at the local and national levels. Agenda items are subject to change as priorities indicate.

For Further Information Contact: Gladys Cate, Office of Special Population Health, Bureau of Primary Health Care, Health Resources and Services Administration, 5600 Fishers Lane, Room 15–62, Rockville, Maryland 20857; telephone (301) 594–0367.

Dated: March 22, 2012.

Reva Harris,

Acting Director, Division of Policy and Information Coordination.

[FR Doc. 2012–7613 Filed 3–29–12; 8:45 am]

BILLING CODE 4165–15–P

DEPARTMENT OF HEALTH AND HUMAN SERVICES

Health Resources and Services Administration

Privacy Act of 1974; Report of an Altered System of Records

AGENCY: Department of Health and Human Services (HHS), Health Resources and Services Administration (HRSA).

ACTION: Notice of an Altered System of Records (SOR).

SUMMARY: In accordance with the requirements of the Privacy Act of 1974 (5 U.S.C. 552a), as amended, the Health Resources and Services Administration (HRSA) is publishing a notice to alter the system of records for the National Practitioner Data Bank for Adverse Information on Physicians and Other Health Care Practitioners, HHS/HRSA/BHPR. The System of Records Notice (SORN) 09–15–0054 was last published on October 1, 2010 (75 FR 60763). The Health Care Quality Improvement Act of 1986, as amended, title IV of Public Law 99–660 (42 U.S.C. 11101 *et seq.*) authorized the Secretary to establish a National Practitioner Data Bank (NPDB) to collect and release certain information relating to the professional competence and conduct of physicians, dentists, and other health care practitioners. By law, the information is releasable only to the specific entities described in the SORN. The law requires the maintenance of records such as medical malpractice payments, adverse licensure and clinical privilege actions, disciplinary actions taken by Boards of Medical Examiners, and professional review actions taken by entities against physicians, dentists, and other healthcare practitioners. Section 1921 of the Social Security Act, as amended, expands reporting to the NPDB to authorize maintenance of records of adverse licensure actions and negative actions or findings taken by a State licensing authority, peer review organization, or private accreditation entity against all health care practitioners or healthcare entities.

The primary purpose of this alteration is to publish the Privacy Act exemptions that became necessary after implementation of Section 1921, which entitles law enforcement agencies to access NPDB information and which therefore requires a similar exemption from certain provisions of the Privacy Act that the Healthcare Integrity and Protection Data Bank (HIPDB) has for investigative materials. Because some of the records may be queried by law enforcement agencies for investigative purposes (i.e., as opposed to employment or other purposes), the system will be exempt from certain Privacy Act requirements to the extent necessary to avoid revealing law enforcement investigative interest and compromising law enforcement investigations. Another purpose of this alteration is to add a new routine use pertaining to system security, which is being added to other SORNs published by HHS.

DATES: As required by the Privacy Act (5 U.S.C. 552a(r)), HRSA filed an altered system of records report with the Chair of the House Committee on Oversight and Government Reform, the Chair of the Senate Committee on Homeland Security and Governmental Affairs, and the Administrator, Office of Information and Regulatory Affairs, Office of Management and Budget (OMB), on 1/25/12. To ensure all parties have adequate time in which to comment, the altered system will become effective 30 days from the publication of this notice or 40 days from the date it was submitted to OMB and Congress, whichever is later, unless HRSA receives comments that require alterations to this notice.

ADDRESSES: Please address comments to Associate Administrator, Bureau of Health Professions, Health Resources and Services Administration, 5600 Fishers Lane, Room 8–103, Rockville, Maryland 20857. Comments received will be available for inspection at this same address from 9 a.m. to 3 p.m. (Eastern Standard Time Zone), Monday through Friday.

FOR FURTHER INFORMATION CONTACT: Director, Division of Practitioner Data Banks, Bureau of Health Professions, 5600 Fishers Lane, Room 8–103, Rockville, Maryland 20857; Telephone: (301) 443–2300. This is not a toll-free number.

SUPPLEMENTARY INFORMATION: The National Practitioner Data Bank (NPDB) is primarily an alert or flagging system intended to facilitate a comprehensive review of health care practitioners' professional credentials for the purpose of protecting the public from unfit practitioners. On January 28, 2010, the Health Resources and Services Administration published a final rule in the **Federal Register** (75 FR 4656) designed to implement section 1921 of the Social Security Act (herein referred to as section 1921). Section 1921 expands the scope of the NPDB. Section 1921 requires each state to adopt a system of reporting to the Secretary certain adverse licensure actions taken against health care practitioners and health care entities by any authority of the state responsible for the licensing of such practitioners or entities. It also requires each state to report any negative action or finding that a state licensing authority, a peer review organization, or a private accreditation entity has finalized against a health care practitioner or entity. Practically speaking, Section 1921 resulted in, among other consequences, the inclusion of the vast majority of information contained in the Healthcare Integrity and Protection Data Bank (HIPDB), a companion data bank, in the NPDB.

The HIPDB was created by the Health Insurance Portability and Accountability Act (HIPAA) of 1996, Public Law (Pub. L. 104–191), which required the Secretary of HHS, acting through the Office of Inspector General (OIG) and the United States Attorney General, to establish a new health care fraud and abuse control program to combat health care fraud and abuse. Although their purposes are different, together the HIPDB and NPDB serve to facilitate review of health care practitioners' and entities' backgrounds. The HIPDB is exempt from certain provisions of the Privacy Act (see 45 CFR 5b.11(b)(2)(ii)(F)). In order to maintain the exemption for the HIPDB investigative materials, which are now also available through the NPDB, and other expanded information which law enforcement agencies can access, it was necessary to extend similar Privacy Act exemptions for the HIPDB to the NPDB. The new routine use that is being added for this system pertains to system security. It is not specific to the NPDB system; it is being added to new, existing, and updated SORNs published by HHS for other systems that are affected by the same security requirement.

Dated: March 21, 2012.

Mary K. Wakefield,

Administrator.

SYSTEM NUMBER:

09–15–0054.

SYSTEM NAME:

National Practitioner Data Bank for Adverse Information on Physicians and Other Health Care Practitioners, HHS/HRSA/BHPR.

SECURITY CLASSIFICATION:

None.

SYSTEM LOCATION:

A contractor, SRA International, Inc., operates and maintains an Internet-based system through a technical service contract for the Division of Practitioner Data Banks, Bureau of Health Professions, Health Resources and Services Administration. SRA's physical address is 4350 Fair Lakes Courts, Fairfax, Virginia 22033–4233. This system is located at the AT&T Data Center, a secure facility; the street address will not be disclosed for security reasons.

CATEGORIES OF INDIVIDUALS COVERED BY THE SYSTEM:

The system collects and maintains records pertaining to the professional competence and conduct of individual health care practitioners (doctors, dentists, nurses, allied health care professionals, social workers, etc.) and health care entities (hospitals, laboratories, pharmacies, etc.).

CATEGORIES OF RECORDS IN THE SYSTEM:

The system collects and maintains reports and query history records. Reports include: (1) Medical malpractice payment reports for all health care practitioners, i.e., physicians, dentists, nurses, optometrists, pharmacists, and podiatrists, etc.; (2) adverse clinical privilege action reports for physicians, dentists, and other healthcare practitioners who may have medical staff privileges either restricted or surrendered; (3) adverse licensure action reports for physicians, dentists and other healthcare practitioners and healthcare entities such as a suspension or revocation; (4) adverse professional society membership action reports for physicians, dentists, and other health care practitioners; (5) reports of the results of formal proceedings by a State licensing authority, peer review organization, or private accreditation organization concluded against a health care practitioner or entity; (6) reports of Medicare/Medicaid exclusions of all healthcare practitioners; and (7) reports of adverse actions taken against the U.S. Drug Enforcement Administration (DEA) registration of all healthcare practitioners.

Reports may contain the following personally-identifiable data elements:

1. Name;
2. Work address;
3. Home address;
4. Social Security number;
5. Date of birth;
6. Name of each professional school attended and year of graduation;
7. Professional license(s) number;
8. Field of licensure;
9. Name of the State or Territory in which the license is held;
10. DEA registration numbers;
11. CMS unique practitioner identification number (for exclusions only);
12. Names of each hospital with which the practitioner is affiliated;
13. Name and address of the entity making the payment;
14. Name, title, and telephone number of the official responsible for submitting the report on behalf of the entity;
15. Payment information including the date and amount of payment and whether it is for a judgment or settlement;
16. Date action occurred;
17. Acts or omissions upon which the action or claim was based;
18. Description of the action/omissions and injuries or illnesses upon which the action or claim was based;
19. Description of the Board action, the date of action and its effective date; and
20. Classification of the action/omission per reporting code.

Query histories indicate the dates that an individual health care practitioner's report(s) were accessed/queried in the system and by whom. Each practitioner's report(s) and query history are available to him or her, if the practitioner elects to submit a self-query. However, the query history will not include query activity by law enforcement agencies, if any, due to the system's exemption.

AUTHORITY FOR MAINTENANCE OF THE SYSTEM:

The Health Care Quality Improvement Act of 1986, as amended, title IV of Public Law 99–660 [42 U.S.C. 11101 *et seq.*], and Section 1921 of the Social Security Act, as amended.

PURPOSE(S):

The purpose of the system is to: (1) Receive information such as adverse licensure actions on all healthcare practitioners or entities, clinical privileges and professional society membership actions on physicians and dentists based on professional competence and conduct, medical malpractice payment history on all health care practitioners, as well as the results of formal proceedings by a State authority, peer review organization or private accreditation organization concluded against any health care practitioner or entity; (2) store such reports so that future queriers may have access to pertinent information regarding the review of a health care practitioner and/or a healthcare entity in their process of making important decisions related to the delivery of health care services; and (3) disseminate such data to entities that qualify to receive the reports under the governing statutes as authorized by the Health Care Quality Improvement Act of 1986 and Section 1921 of the Social Security Act to protect the public from unfit practitioners and prevent unfit practitioners from providing patient care.

ROUTINE USES OF RECORDS MAINTAINED IN THE SYSTEM, INCLUDING CATEGORIES OF USERS AND THE PURPOSES OF SUCH USES:

Information from this system shall be disclosed to:

1. Hospitals requesting information, such as, adverse licensure actions, medical malpractice payments or exclusions from Medicare and Medicaid programs taken against all licensed healthcare practitioners such as physicians, dentists, nurses, podiatrists, chiropractors, and psychologists. The information is accessible to both public and private sector hospitals who can request information concerning a physician, dentist or other health care practitioner who is on its medical staff (courtesy or otherwise) or who has clinical privileges at the hospital, for the purpose of: (a) Screening the professional qualifications of individuals who apply for staff positions or clinical privileges at the hospital; and (b) meeting the requirements of the Health Care Quality Improvement Act of 1986, which prescribes that a hospital must query the NPDB once every 2 years regarding all individuals on its medical staff or who hold clinical privileges.

2. Other health care entities, as defined in 45 CFR 60.3, to which a physician, dentist or other health care practitioner has applied for clinical privileges or appointment to the medical staff or who has entered or may be entering an employment or affiliation relationship. The purpose of these disclosures is to identify individuals whose professional conduct may be unsatisfactory.

3. A health care entity with respect to professional review activity. The purpose of these disclosures is to aid health care entities in the conduct of professional review activities, such as those involving determinations of whether a physician, dentist, or other health care practitioner may be granted membership in a professional society; the conditions of such membership, or of changes to such membership; and ongoing professional review activities conducted by a health care entity which provides health care services, of the professional performance or conduct of a physician, dentist, or other health care practitioner.

4. A State healthcare practitioner and/or entity licensing or certification authority can request information expanded by Section 1921 of the Social Security Act in conducting a review of all healthcare practitioners or health entities. A State healthcare practitioner and entity licensing or certification authority may also request information when making licensure determinations about healthcare practitioners and entities. The purpose of these disclosures is to aid the board or certification authority in meeting its responsibility to protect the health of the population in its jurisdiction, by identifying individuals whose professional performance or conduct may be unsatisfactory.

5. Federal and State health care programs (and their contractors) can request information reported under Section 1921 of the Social Security Act. The purpose of these disclosures is to aid Federal and State health programs to ensure the integrity and professional competence of affiliated health care practitioners and uncovering information needed to make appropriate decisions in the delivery of healthcare.

6. State Medicaid Fraud Control Units (MFCUs) can request information reported under Section 1921 of the Social Security Act to assist with investigating fraud and prosecution of healthcare practitioners and providers in the administration of the Medicaid programs.

7. U.S. Comptroller General can request information reported under Section 1921 of the Social Security Act to assist in determining the fitness of individuals to provide healthcare services, and protect the health and safety of individuals receiving health care through programs who employ these individuals.

8. U.S. Attorney General and other law enforcement agencies can request information reported under Section 1921 of the Social Security Act to assist with healthcare investigations involving healthcare practitioners and healthcare entities. The purpose of the disclosure would assist in determining the fitness of individuals to provide healthcare services, and protect the health and safety of individuals receiving health care through programs who employ these individuals.

9. Utilization and quality control Peer Review Organizations and those entities which are under contract with the CMS can request information reported under Section 1921 of the Social Security Act to protect and improve the quality of care for Medicare beneficiaries when performing quality of care reviews and other related activities.

10. A physician, dentist, or other health care practitioner can request information concerning himself or herself.

11. An entity that has been reported on may query the system to receive information concerning itself.

12. A person or entity can request statistical information, in a form which does not permit the identification of any individual or entity pursuant to the procedures established by the Department. An example of this disclosure involves researchers who may use statistical information to identify the total number of nurses with adverse licensure actions in a specific State.

13. An attorney, or individual representing himself or herself, who has filed a medical malpractice action or claim in a State or Federal court or other adjudicative body against a hospital, and who requests information regarding a specific physician, dentist, or other health care practitioner who is also named in the action or claim provided that: (a) This information will be disclosed only upon the submission of evidence that the hospital failed to request information from the NPDB as required by law; and (b) the information will be used solely with respect to litigation resulting from the action or claim against the hospital. The purpose of these disclosures is to permit an attorney (or a person representing himself or herself in a medical malpractice action) to have information from the NPDB on a health care practitioner, under the conditions set out in this routine use.

14. Any Federal entity, employing or otherwise engaging under arrangement (e.g., such as a contract) the services of a physician, dentist, or other health care practitioner, or having the authority to sanction such practitioners covered by a Federal program, which: (a) Enters into a memorandum of understanding with HHS regarding its participation in the NPDB; (b) engages in a professional review activity in determining an adverse action against a practitioner; and (c) maintains a Privacy Act system of records regarding the health care practitioners it employs, or whose services it engages under arrangement. The purpose of such disclosures is to enable hospitals and other facilities and health care providers under the jurisdiction of Federal agencies such as the Public Health Service, HHS; the Department of Defense; the Department of Veterans' Affairs; the U.S. Coast Guard; and the Bureau of Prisons, Department of Justice, to participate in the NPDB. The Health Care Quality Improvement Act of 1986 includes provisions regarding the participation of such agencies and of the DEA.

15. In the event of litigation where the defendant is: (a) The Department, any component of the Department, or any employee of the Department in his or her official capacity; (b) the United States where the Department determines that the claim, if successful, is likely to affect directly the operation of the Department or any of its components; or (c) any Department employee in his or her individual capacity where the Department of Justice has agreed to represent such employee, for example in defending a claim against the Public Health Service based upon an individual's mental or physical condition and alleged to have arisen because of activities of the Public Health Service in connection with such individual, disclosures may be made to the Department of Justice to enable the Department to present an effective defense, provided that such disclosure is compatible with the purpose for which the records were collected.

16. The contractor, SRA International Inc., accesses the system to operate and maintain it. These functions include but are not limited to providing continuous user availability, develop system enhancements, upgrade of hardware and software, security information assurance, and system backups.

17. To appropriate federal agencies and Department contractors that have a need to know the information for the purpose of assisting the Department's efforts to respond to a suspected or confirmed breach of the security or confidentiality of information maintained in this system of records, and the information disclosed is relevant and necessary for that assistance.

POLICIES AND PRACTICES FOR STORING, RETRIEVING, ACCESSING, RETAINING, AND DISPOSING OF RECORDS IN THE SYSTEM:

STORAGE:

Records are maintained on database servers with disk storage, optical jukebox storage, backup tapes and printed reports.

RETRIEVABILITY:

Records are retrieved by name, date of birth, social security number, educational information, and license number. The matching algorithm uses these data elements to match reports to the subject.

SAFEGUARDS FOR ACCESSING RECORDS:

1. Authorized Users include internal users such as the government and contractor personnel staff who support the NPDB and are required to obtain favorable adjudication for a Level 5 Position of Public Trust. New employees of the NPDB and the contractor must attend security training, sign a Non-Disclosure Agreement, and sign the Rules of Behavior which is renewed annually. Authorized users are given role-based access to the system on a limited need-to-know basis. All physical and logical access to the system is removed upon termination of employment. External users, who are responsible for meeting Title IV reporting and/or querying requirements to the NPDB, are responsible for determining their eligibility to access the NPDB through a self-certification process which requires completing an Entity Registration form. All external users must acknowledge the Rules of Behavior. All external users must re-register every two years to access the NPDB. Both HRSA and the contractor maintain lists of authorized users.

2. Physical Safeguards involve physical controls that are in place 24 hours a day/7 days a week such as identification badge access, cipher locks, locked hardware cages, man trap with biometric hand scanner, security guard monitoring, and closed circuit TV. All sites are protected with fire and environmental safety controls.

3. Technical Safeguards include firewalls, network intrusion detection, host-based intrusion detection and file integrity monitoring, user identification, and passwords restrictions. All Web-based traffic is encrypted using 128 bit SSL and all network traffic is encrypted internally.

4. Administrative Safeguards involve certification and accreditation that is required every three years, which authorizes operation of the system based on acceptable risk. Security assessments are conducted continuously throughout the year to verify compliance with all required controls.

RETENTION AND DISPOSAL OF RECORDS:

HRSA is working with NARA to obtain the appropriate retention value.

SYSTEM MANAGER(S) AND ADDRESS:

Director, Division of Practitioner Data Banks, Bureau of Health Professions, Health Resources and Services Administration, Room 8–103, Parklawn Building, 5600 Fishers Lane, Rockville, Maryland 20857.

NOTIFICATION PROCEDURE:

Subject to the exemption from the Privacy Act notification procedure requirement, information is available upon request, to the persons or entities, or to the authorized agents in such form or manner as the Secretary prescribes. Currently, the subject of a report is notified via U.S. mail when a report concerning the individual is submitted to the NPDB via Subject Notification Document (SND). This procedure is unchanged by the exemption.

REQUESTS BY MAIL:

Practitioners may submit a ''Request for Information Disclosure'' to the address under system location for any report on themselves. The request must contain the following: Name, address, date of birth, gender, Social Security Number (optional), professional schools and years of graduation, and the professional license(s). For license, include: The license number, the field of licensure, the name of the State or Territory in which the license is held, and DEA registration number(s). The practitioner must submit a signed and notarized self-query request.

PENALTIES FOR VIOLATION:

Submitting a request under false pretenses is a criminal offense and subject to a civil monetary penalty of up to $11,000 for each violation.

REQUESTS IN PERSON:

Due to security considerations, the NPDB cannot accept requests in person.

REQUESTS BY TELEPHONE:

Practitioners may provide all of the identifying information stated above to the NPDB Customer Service Center operator. Before the data request is fulfilled, the operator will return a paper copy of this information for verification, signature and notarization.

RECORD ACCESS PROCEDURES:

Although this system will be exempt from the Privacy Act access requirement, the exemption will be limited and discretionary. An individual health care practitioner may continue to seek access to his or her records in the NPDB by submitting a self-query request form on-line at: *www.npdb-hipdb.hrsa.gov.* The requests are submitted over the web using the Integrated Query and Reporting Service (IQRS), Query and Reporting Extensible Markup Language Service (QRXS), Interface Control Document (ICD) Transfer Program (ITP) or the Proactive Disclosure Service (PDS). Self-query, as described previously, may be initiated via the electronic system and is completed using the conventional mail system. Requesters, including self-queries, will receive an accounting of disclosure that has been made of their records, if any. The exemption will prevent law enforcement query activity from being disclosed to the health care practitioner in response to a self-query.

Notwithstanding the access exemption, a practitioner may request access to his or her full query history (*i.e.,* including law enforcement query activity, if any), by submitting a written request to the System Manager identified above and following the same procedures indicated under ''Notification Procedure.'' The request will be processed pursuant to the agency's discretionary access authority under 45 CFR 5b.11(d).

CONTESTING RECORD PROCEDURES:

Because of the system's exemption, the procedures for disputing a NPDB report will not apply to any query history information that is exempt from access. The NPDB routinely mails a copy of any report filed in it to the subject individual. A subject individual may contest the accuracy of information in the NPDB concerning himself or herself and file a dispute. To dispute the accuracy of the information, the individual must contact the NPDB and the reporting entity to: (1) Request for the reporting entity to file correction to the report; and (2) request the information be entered into a ''disputed'' status and submit a statement regarding the basis for the inaccuracy of the information in the report. If the reporting entity declines to change the disputed report or takes no actions, the subject may request that the Secretary of HHS review the disputed report. In order to seek a Secretarial Review, the subject must: (1) Provide written documentation containing clear and brief factual information regarding the information of the report; (2) submit supporting documentation or justification substantiating that the reporting entity's information is inaccurate; and (3) submit proof that the subject individual has attempted to

resolve the disagreement with reporting entity but was unsuccessful. The Department can only determine whether the report was legally required to be filed and whether the report accurately depicts the action taken and the reporter's basis for action. Additional detail on the process of dispute resolution and Secretarial Review process can be found at 45 CFR 60.14 of the NPDB regulations.

RECORD SOURCE CATEGORIES:

The records contained in the system are submitted by the following entities: (1) Insurance companies and others who have made payment as a result of a malpractice action or claim, (2) State Boards of Medical and Dental Examiners; (3) State Licensing Boards; (4) hospitals and other health care entities; (5) DEA; and (6) Federal entities which employ health practitioners or who have authority to sanction such practitioners covered by a Federal program. Section 1921 of the Social Security Act expands reporting of actions submitted by State health care practitioner licensing and certification authorities (including medical and dental boards), State entity licensing and certification authorities, peer review organizations and private accreditation organizations.

SYSTEMS EXEMPTED FROM CERTAIN PROVISIONS OF THE ACT:

The Secretary has exempted this system from certain provisions of the Act. In accordance with 5 U.S.C. 552(k)(2) and 45 CFR 5b.11(b)(ii)(L), this system is exempt from subsections 5 U.S.C. 552a(c)(3), (d)(1)–(4), (e)(4)(G) and (H), and (f).

[FR Doc. 2012–7612 Filed 3–29–12; 8:45 am]

BILLING CODE 4165–15–P

DEPARTMENT OF HEALTH AND HUMAN SERVICES

National Institutes of Health

Government-Owned Inventions; Availability for Licensing

AGENCY: National Institutes of Health, Public Health Service, HHS.

ACTION: Notice.

SUMMARY: The inventions listed below are owned by an agency of the U.S. Government and are available for licensing in the U.S. in accordance with 35 U.S.C. 207 to achieve expeditious commercialization of results of federally-funded research and development. Foreign patent applications are filed on selected inventions to extend market coverage for companies and may also be available for licensing.

ADDRESSES: Licensing information and copies of the U.S. patent applications listed below may be obtained by writing to the indicated licensing contact at the Office of Technology Transfer, National Institutes of Health, 6011 Executive Boulevard, Suite 325, Rockville, Maryland 20852–3804; telephone: 301–496–7057; fax: 301–402–0220. A signed Confidential Disclosure Agreement will be required to receive copies of the patent applications.

MUC–1 Tumor Antigen Agonist Epitopes for Enhancing T-cell Responses to Human Tumors

Description of Technology: The MUC–1 tumor associated antigen has been shown to be overexpressed and/or underglycosylated in a wide range of human cancers. The C-terminus region of MUC–1 (MUC–1C) has been shown to be an oncogene and has been associated with a more aggressive phenotype in several different cancers.

Scientists at NIH have identified 7 new agonist epitopes of the MUC–1 tumor associated antigen. Compared to their native epitope counterparts, peptides reflecting these agonist epitopes have been shown to enhance the generation of human tumor cells, which in turn have a greater ability to kill human tumor cells endogenously expressing the native MUC–1 epitope. The agonist epitopes span both the VNTR region of MUC–1 and the C-terminus region. The epitopes encompass 2 major MHC alleles reflecting the majority of the population.

Along with the method of use, the technology encompasses the use of these agonist epitopes in peptide- and protein-based vaccines, with dendritic cells or other antigen presenting cells, or encoding sequences in DNA, viral, bacterial, yeast, or other types of vectors, or to stimulate T-cells *in vitro* for adoptive immunotherapy protocols.

Potential Commercial Applications:

- As a therapeutic vaccine to enhance patient's immune responses to a range of human cancers
- As a preventive vaccine for patients with preneoplastic conditions or a high risk of developing cancer
- As a preventive vaccine for cancers
- For *in vitro* stimulation of lymphocytes for adoptive transfer protocols for cancer

Competitive Advantages:

- The agonist epitopes have been shown to be much more potent than their natural counterparts in activating human T-cells to MUC–1.
- Compared to T-cells activated with the corresponding native epitopes, the T-cells activated by the agonist epitopes lyse tumor cells to a greater extent.
- The technology can be used in a wide range of cancer vaccine platforms and in adoptive immunotherapy protocols.
- The technology can be combined with existing vaccine platforms including those currently showing patient benefit, as well as with other therapeutic modalities.

Development Stage:

- Pre-clinical
- In vitro data available

Inventors: Jeffrey Schlom and Kwong-Yok Tsang (NCI).

Intellectual Property: HHS Reference No. E–001–2012/0—U.S. Patent Application No. 61/582,723 filed 03 Jan 2012.

Related Technologies:

- HHS Reference No. E–154–1998/0—PCT Application No. PCT/US98/03693
- HHS Reference No. E–321–2003/0—PCT Application No. PCT/US2004/41921

Licensing Contact: Sabarni Chatterjee, Ph.D., MBA; 301–435–5587; *chatterjeesa@mail.nih.gov.*

Collaborative Research Opportunity: The Laboratory of Tumor Immunology and Biology, National Cancer Institute, is seeking statements of capability or interest from parties interested in collaborative research to further develop, evaluate or commercialize the use of MUC–1 tumor antigen agonist epitopes for the treatment or prevention of cancer. For collaboration opportunities, please contact John Hewes, Ph.D. at *hewesj@mail.nih.gov.*

Novel Diagnostic, Prognostic and Therapeutic Biomarker for Hepatocellular Carcinoma

Description of Technology: Scientists at the National Cancer Institute have discovered that Stearol-CoA desaturase-1 (SCD–1) is associated with hepatocellular carcinoma (HCC). Utilizing a microarray to analyze HCC patient samples, the investigators found SCD–1 is elevated in liver tumor tissues and it is a marker for a highly aggressive form of HCC, hepatic stem cell-like HCC subtype (HpSC HCC), which retains stem-cell features capable of cellular plasticity and cell motility. The investigators found SCD–1 is significantly elevated in HpSC tumors in comparison to less aggressive HCC tumors and it is associated with poor patient survival. *In vitro* studies demonstrate SCD–1 inhibition and/or addition of saturated palmitic acid reduces HpSC HCC characteristics. In addition to diagnostic, prognostic, and treatment applications, this technology

may enable clinicians to effectively stratify patients for more aggressive cancer treatment and prioritize candidates for liver transplantation.

Potential Commercial Applications:

- Method to diagnose HCC
- Method to prognose patient survival
- Method to stratify HCC for appropriate treatment
- Method to treat HCC

Competitive Advantages:

- Retrospective studies performed on human samples
- Modulation of SCD–1 reduces HpSC HCC characteristics

Development Stage:

- Early-stage
- In vitro data available
- In vivo data available (human)

Inventors: Anuradha Budhu and Xin W. Wang (NCI).

Intellectual Property: HHS Reference No. E–205–2011/0—U.S. Provisional Application No. 61/533,392 filed 12 Sep 2011.

Related Technology: HHS Reference No. E–139–2010/0—PCT Application No. PCT/US2011/032285 filed 13 Apr 2011.

Licensing Contact: Jennifer Wong; 301–435–4633; *wongje@mail.nih.gov.*

Collaborative Research Opportunity: The National Cancer Institute is seeking statements of capability or interest from parties interested in collaborative research to further develop, evaluate or commercialize biomarkers for liver cancer. For collaboration opportunities, please contact John Hewes, Ph.D. at *hewesj@mail.nih.gov.*

Potential Use of Anti-IgE in the Treatment of Lupus Nephritis

Description of Technology: Systemic lupus erythematosus (SLE) is a multi-organ inflammatory disease characterized by a significant morbidity and mortality related to both disease evolution as well as therapeutic side effects. At least half of SLE patients develop lupus nephritis.

The inventors have used a *Lyn* -/- mouse model that develops an autoimmune disease exhibiting some features of human SLE. Using this model the inventors identified basophils and self-reactive IgEs as important components in the development of autoantibody-mediated kidney disease. The inventors found that depletion of basophils or the absence of IgE causes a considerable reduction in autoantibody production and preserves kidney function in the *Lyn* -/- mice. The inventors' work demonstrates that IgE immune complexes can activate basophils and that removal of self-reactive IgEs that form functional circulating immune complexes prevents kidney disease. Further, the inventors have shown that basophils are contributors to the production of the self-reactive antibodies that cause lupus-like nephritis in the *Lyn* -/- mice. Accordingly, reducing circulating IgE levels or reducing basophil activation may be of therapeutic benefit.

Potential Commercial Applications: Further research and development of therapeutic approach to treat lupus nephritis.

Competitive Advantages: Current treatment of lupus has not advanced for many years. This finding is of importance for its potential in advancing treatment of the disease.

Development Stage:

- Early-stage
- Pre-clinical

Inventors: Juan Rivera and Nicolas Charles (NIAMS).

Publications:

1. Charles N, *et al.* Basophils and the T helper 2 environment can promote the development of lupus nephritis. Nat Med. 2010 Jun;16(6):701–707. [PMID 20512127].

2. Brightbill HD, *et al.* Antibodies specific for a segment of human membrane IgE deplete IgE-producing B cells in humanized mice. J Clin Invest. 2010 Jun;120(6):2218–2229. [PMID 20458139].

3. Mack M, *et al.* Basophils and mast cells in renal injury. Kidney Int. 2009 Dec;76(11):1142–1147. [PMID 19692999].

4. Busse W, *et al.* Omalizumab, anti-IgE recombinant humanized monoclonal antibody for the treatment of severe allergic asthma. J Allergy Clin Immunol. 2001 Aug;108(2):184–90. [PMID: 11496232].

Intellectual Property: HHS Reference No. E–216–2010/0—PCT Application No. PCT/US2010/058077 filed 24 Nov 2010.

Licensing Contact: Jaime M. Greene; 301–435–5559; *greenejaime@mail.nih.gov.*

Collaborative Research Opportunity: The National Institute of Arthritis and Musculoskeletal and Skin Diseases is seeking statements of capability or interest from parties interested in collaborative research to further develop, evaluate or commercialize the technology for the use of anti-IgE in the treatment of Lupus Nephritis. For collaboration opportunities, please contact Cecilia Pazman at *pazmance@mail.nih.gov.*

Dated: March 27, 2012.

Richard U. Rodriguez,

Director, Division of Technology Development and Transfer, Office of Technology Transfer, National Institutes of Health.

[FR Doc. 2012–7709 Filed 3–29–12; 8:45 am]

BILLING CODE 4140–01–P

DEPARTMENT OF HOMELAND SECURITY

[Docket No. DHS–2012–0012]

National Infrastructure Advisory Council

AGENCY: National Protection and Programs Directorate, DHS.

ACTION: Committee Management; Notice of an open Federal Advisory Committee meeting.

SUMMARY: The National Infrastructure Advisory Council (NIAC) will meet on Tuesday, April 17, 2012, 1310 N. Courthouse Road, Suite 300, Virginia Room, Arlington, VA 22201. The meeting will be open to the public.

DATES: The NIAC will meet Tuesday, April 17, 2012, from 1:30 p.m. to 4:30 p.m. The meeting may close early if the committee has completed its business. For additional information, please consult the NIAC Web site, *www.dhs.gov/NIAC,* or contact the NIAC Secretariat by phone at (703) 235–2888 or by email at *NIAC@dhs.gov.*

ADDRESSES: 1310 N. Courthouse Road, Suite 300, Virginia Room, Arlington, VA 22201.

While this meeting is open to the public, participation in the NIAC deliberations is limited to committee members and appropriate Federal Government officials. Discussions may include committee members, appropriate Federal Government officials, and other invited persons attending the meeting to provide information that may be of interest to the Council.

Immediately following the committee member deliberation and discussion period, there will be a limited time period for public comment. Comments should be limited to meeting agenda items and previous NIAC studies. All previous NIAC studies can be located at *www.dhs.gov/NIAC.* Relevant public comments may be submitted in writing or presented in person for the Council to consider. Comments should be limited to the issues and topics addressed by the Council. In-person presentations will be limited to three minutes per speaker, with no more than 30 minutes for all speakers. Parties interested in making in-person

comments should register no fewer than 15 minutes prior to the beginning of the meeting at the meeting location. Oral comments will be permitted based upon the order of registration; all registrants may not be able to speak if time does not permit. Written comments may be sent to Nancy Wong, Department of Homeland Security, National Protection and Programs Directorate, 245 Murray Lane SW., Mail Stop 0607, Arlington, VA 20598–0607. It is recommended that written comments be received by Nancy Wong no later than April 6, 2012, identified by Federal Register Docket Number DHS–2012–0012 for consideration by the NIAC members prior to the meeting. Written comments provided after April 6, 2012, will still be accepted and reviewed by the members. Comments may also be submitted by any *one* of the following methods:

- *Federal eRulemaking Portal: www.regulations.gov.* Follow the instructions for submitting written comments.
- *Email: NIAC@dhs.gov.* Include the docket number in the subject line of the message.
- *Fax:* 703–603–5098.
- *Mail:* Nancy Wong, National Protection and Programs Directorate, Department of Homeland Security, 245 Murray Lane SW., Mail Stop 0607, Arlington, VA 20598–0607.

Instructions: All written submissions received must include the words ''Department of Homeland Security'' and the docket number for this action. Written comments received will be posted without alteration at *www.regulations.gov,* including any personal information provided.

Docket: For access to the docket to read background documents or comments received by the NIAC, go to *www.regulations.gov.*

FOR FURTHER INFORMATION CONTACT: Nancy Wong, National Infrastructure Advisory Council Designated Federal Officer, Department of Homeland Security, telephone (703) 235–2888.

SUPPLEMENTARY INFORMATION: Notice of this meeting is given under the Federal Advisory Committee Act, 5 U.S.C. App. (Pub. L. 92–463). The NIAC shall provide the President through the Secretary of Homeland Security with advice on the security of the critical infrastructure sectors and their information systems.

The NIAC will meet to address issues relevant to the protection of critical infrastructure as directed by the President. At this meeting, the committee will receive a presentation from the NIAC Working Group regarding the scope of the next phase of the Working Group's critical infrastructure resilience study, which incorporates a regional perspective.

Meeting Agenda

I. Opening of Meeting
II. Roll Call of Members
III. Opening Remarks and Introductions
IV. Approval of January 10, 2012, Minutes
V. NIAC Deliberation and Recommendation on Scope of Next Study on Critical Infrastructure Resilience incorporating a regional perspective
VI. Public Comment: Discussion Limited to Meeting Agenda Items and Previous NIAC Studies
VII. Closing Remarks

Information on Services for Individuals With Disabilities

For information on facilities or services for individuals with disabilities or to request special assistance at the meeting, contact the NIAC Secretariat at (703) 235–2888 as soon as possible.

Dated: March 26, 2012.

Nancy J. Wong,

Designated Federal Officer for the NIAC.

[FR Doc. 2012–7695 Filed 3–29–12; 8:45 am]

BILLING CODE 9110–9–P

DEPARTMENT OF HOMELAND SECURITY

Coast Guard

[USCG–2012–0099]

Prince William Sound Regional Citizens' Advisory Council Charter Renewal

AGENCY: Coast Guard, DHS.

ACTION: Notice of recertification.

SUMMARY: The purpose of this notice is to inform the public that the Coast Guard has recertified the Prince William Sound Regional Citizens' Advisory Council (PWSRCAC) as an alternative voluntary advisory group for Prince William Sound, Alaska. This certification allows the PWSRCAC to monitor the activities of terminal facilities and crude oil tankers under the Prince William Sound Program established by statute.

DATES: This recertification is effective for the period from March 1, 2012 through February 28, 2013.

FOR FURTHER INFORMATION CONTACT: LCDR Mike Franklin, Seventeenth Coast Guard District (dpi), by phone at (907) 463–2821, email *Michael.R.Franklin@uscg.mil* or by mail at P.O. Box 25517, Juneau, Alaska 99802.

SUPPLEMENTARY INFORMATION:

Background and Purpose

As part of the Oil Pollution Act of 1990, Congress passed the Oil Terminal and Oil Tanker Environmental Oversight and Monitoring Act of 1990 (the Act), 33 U.S.C. 2732, to foster a long-term partnership among industry, government, and local communities in overseeing compliance with environmental concerns in the operation of crude oil terminals and oil tankers.

On October 18, 1991, the President delegated his authority under 33 U.S.C 2732(o) to the Secretary of Transportation in Executive Order 12777, section 8(g) (see 56 FR 54757; October 22, 1991) for purposes of certifying advisory councils, or groups, subject to the Act. On March 3, 1992, the Secretary redelegated that authority to the Commandant of the USCG (see 57 FR 8582; March 11, 1992). The Commandant redelegated that authority to the Chief, Office of Marine Safety, Security and Environmental Protection (CG–5) on March 19, 1992 (letter #5402).

On July 7, 1993, the USCG published a policy statement, 58 FR 36504, to clarify the factors that shall be considered in making the determination as to whether advisory councils, or groups, should be certified in accordance with the Act.

The Assistant Commandant for Marine Safety and Environmental Protection (CG–5), redelegated recertification authority for advisory councils, or groups, to the Commander, Seventeenth Coast Guard District on February 26, 1999 (letter #16450).

On September 16, 2002, the USCG published a policy statement, 67 FR 58440, that changed the recertification procedures such that applicants are required to provide the USCG with comprehensive information every three years (triennially). For each of the two years between the triennial application procedure, applicants submit a letter requesting recertification that includes a description of any substantive changes to the information provided at the previous triennial recertification. Further, public comment is not solicited prior to recertification during streamlined years, only during the triennial comprehensive review.

On March 1, 2003, the Coast Guard was transferred from the Department of Transportation (DoT) to the Department of Homeland Security (DHS) and retained the previous delegations that were provided while it was in the DoT.

The Alyeska Pipeline Service Company pays the PWSRCAC $2.9 million annually in the form of a longterm contract. In return for this

funding, the PWSRCAC must annually show that it ''fosters the goals and purposes'' of OPA 90 and is ''broadly representative of the communities and interests in the vicinity of the terminal facilities and Prince William Sound.'' The PWSRCAC is an independent, nonprofit organization founded in 1989. Though it receives federal oversight like many independent, non-profit organizations, it is not a federal agency. The PWSRCAC is a local organization that predates the passage of OPA 90. The existence of the PWSRCAC was specifically recognized in OPA 90 where it is defined as an ''alternate voluntary advisory group.''

Alyeska funds the PWSRCAC, and the Coast Guard makes sure the PWSRCRC operates in a fashion that is broadly consistent with OPA 90.

Recertification

By letter dated February 27th, 2012, the Commander, Seventeenth Coast Guard certified that the PWSRCAC qualifies as an alternative voluntary advisory group under 33 U.S.C. 2732(o). This recertification terminates on February 28, 2013.

Dated: March 5, 2012.

T.P. Ostebo,

Rear Admiral, U.S. Coast Guard Commander, Seventeenth Coast Guard District.

[FR Doc. 2012–7625 Filed 3–29–12; 8:45 am]

BILLING CODE 9110–04–P

DEPARTMENT OF HOMELAND SECURITY

Coast Guard

[Docket No. USCG–2012–0212]

Navigation Safety Advisory Council

AGENCY: Coast Guard, DHS.

ACTION: Notice of Federal Advisory Committee Meeting.

SUMMARY: The Navigation Safety Advisory Council (NAVSAC) will meet on April 17–18, 2012, in Arlington, Virginia to discuss matters relating to maritime collisions, ramming, groundings, Inland and International Rules of the Road, navigation regulations and equipment, routing measures, marine information, diving safety, and aids to navigation systems. The meeting will be open to the public.

DATES: NAVSAC will meet Tuesday, April 17, 2012, from 8 a.m. to 5 p.m., and Wednesday, April 18, 2012, from 8 a.m. to 5 p.m. Please note that the meeting may close early if the committee has completed its business. Pre-registration and written comments are due April 13, 2012.

ADDRESSES: The meeting will be held at the Navy League Building, Coast Guard Recruiting Command, 5th floor conference room, 2300 Wilson Boulevard, Suite 500, Arlington, Virginia 20598. All visitors to the Navy League Building must pre-register to be admitted to the building. You may pre-register by contacting the individual listed in **FOR FURTHER INFORMATION CONTACT** below.

For information on facilities or services for individuals with disabilities or to request special assistance at the meeting, contact the individual listed in the **FOR FURTHER INFORMATION CONTACT** as soon as possible.

To facilitate public participation, we are inviting public comment on the issues to be considered by the committee as listed in the ''Agenda'' section below. You may submit written comments no later than April 13, 2012, and must be identified by USCG–2012–0212 using one of the following methods:

- *Federal eRulemaking Portal: http://www.regulations.gov.* Follow the instructions for submitting comments (preferred method to avoid delays in processing).
- *Fax:* 202–493–2251.
- *Mail:* Docket Management Facility (M–30), U.S. Department of Transportation, West Building Ground Floor, Room W12–140, 1200 New Jersey Avenue SE., Washington, DC 20590–0001.
- *Hand delivery:* Same as mail address above, between 9 a.m. and 5 p.m., Monday through Friday, except Federal holidays. The telephone number is 202–366–9329.

Instructions: All submissions received must include the words ''Department of Homeland Security'' and the docket number for this action. Comments received will be posted without alteration at *http://www.regulations.gov,* including any personal information provided. You may review a Privacy Act notice regarding our public dockets in the January 17, 2008, issue of the **Federal Register** (73 FR 3316).

Docket: For access to the docket to read documents or comments related to this notice, go to *http://www.regulations.gov.* A public comment period will be held during the meeting on April 17, 2012, from 3 p.m. to 4 p.m. and April 18, 2012 prior to the close of the meeting. Public presentations may also be given. Speakers are requested to limit their comments to 10 minutes. Please note that the public comment period may end before the time indicated, following the last call for comments. Contact the individual listed below to register as a speaker.

FOR FURTHER INFORMATION CONTACT: If you have questions about this meeting, please contact Mr. Mike Sollosi, the NAVSAC Alternate Designated Federal Officer (ADFO), at telephone 202–372–1545 or email *mike.m.sollosi@uscg.mil,* or Mr. Dennis Fahr, at telephone 202–372–1531 or email *dennis.fahr@uscg.mil.* If you have questions on viewing or submitting material to the docket, call Renee V. Wright, Program Manager, Docket Operations, telephone 202–366–9826.

SUPPLEMENTARY INFORMATION: Notice of this meeting is given under the *Federal Advisory Committee Act* (FACA), 5 U.S.C. App. 2 (Pub. L. 92–463).

The NAVSAC is an advisory committee authorized by 33 U.S.C. 2073 and chartered under the provisions of the FACA. NAVSAC provides advice and recommendations to the Secretary, through the Commandant of the U.S. Coast Guard, on matters relating to prevention of maritime collisions, rammings, and groundings, Inland and International Rules of the Road, navigation regulations and equipment, routing measures, marine information, diving safety, and aids to navigation systems.

Agenda

The NAVSAC will meet to review, discuss and formulate recommendations on the following topics:

Tuesday, April 17, 2012

(1) Update on all past Resolutions to the Council.

The Council will receive an update on the status of all outstanding resolutions and decide disposition as appropriate.

(2) Navigation Rules Regulatory Project.

The Council will receive an update on the Coast Guard's progress toward implementing NAVSAC proposed changes to the Inland Navigation Rules.

(3) E-Navigation Strategy.

Under the auspices of the Committee on the Marine Transportation System, the Coast Guard and other agencies have developed a National e-Navigation Strategy that will establish a framework for data exchange between and among ships and shore facilities. The Council will receive an update and discuss the implementation plan for the Strategy.

(4) Electronic Chart Display and Information System (ECDIS) Anomalies.

Mandatory carriage of ECDIS will be phased in over a six year period beginning in 2012. This series of presentations will inform the Council of developments and difficulties encountered in deploying ECDIS, including accuracy of charted positions,

the types of vessels to be impacted, and training requirements for ECDIS.

(5) Navigation 2040 and the aid mix of the future.

The Council will receive a briefing on the determination of the future mix of visual and electronic Aids to Navigation (ATON).

(6) Automatic Identification System(AIS) ATON Symbols.

The Council will receive a briefing and comment on proposed chart symbols for new electronic Aids to Navigation.

(7) Atlantic Coast Ports Access Route Study (ACPARS).

The Council will receive a briefing on the ACPARS undertaken to accommodate offshore wind energy development.

(8) Form Council working groups to discuss the preceding topics as appropriate.

Public comments or questions will be taken at the discretion of the DFO during the discussion and recommendations portion of the meeting as well as during the public comment period.

Wednesday, April 18, 2012

(1) Working Group Discussions continued from April 17.

(2) Working Group Reports presented to the Council.

(3) New Business:

a. International Maritime Organization (IMO) Safety Navigation Subcommittee.

The Coast Guard will update the Council on recent decisions and planned outputs of the IMO Safety Navigation Subcommittee.

b. Summary of NAVSAC Action Items.

c. Schedule Next Meeting Date—Fall 2012.

d. Committee discussion/address of new tasks.

(4) A public comment period will be held after the discussion/address of new tasks. Speakers' comments are limited to 10 minutes each. Public comments or questions will be taken at the discretion of the DFO during the discussion and recommendations, and new business portion of the meeting.

Dated: March 23, 2012.

Dana A. Goward,

Director, Marine Transportation Systems Management, U.S. Coast Guard.

[FR Doc. 2012–7627 Filed 3–29–12; 8:45 am]

BILLING CODE 9110–04–P

DEPARTMENT OF HOMELAND SECURITY

Federal Emergency Management Agency

[Docket ID: FEMA–2011–0042; OMB No. 1660–0083]

Agency Information Collection Activities: Submission for OMB Review; Comment Request, Application for Community Disaster Loan (CDL) Program

AGENCY: Federal Emergency Management Agency, DHS.

ACTION: Notice.

SUMMARY: The Federal Emergency Management Agency (FEMA) will submit the information collection abstracted below to the Office of Management and Budget for review and clearance in accordance with the requirements of the Paperwork Reduction Act of 1995. The submission will describe the nature of the information collection, the categories of respondents, the estimated burden (i.e., the time, effort and resources used by respondents to respond) and cost, and the actual data collection instruments FEMA will use.

DATES: Comments must be submitted on or before April 30, 2012.

ADDRESSES: Submit written comments on the proposed information collection to the Office of Information and Regulatory Affairs, Office of Management and Budget. Comments should be addressed to the Desk Officer for the Department of Homeland Security, Federal Emergency Management Agency, and sent via electronic mail to *oira.submission@omb.eop.gov* or faxed to (202) 395–5806.

FOR FURTHER INFORMATION CONTACT: Requests for additional information or copies of the information collection should be made to Director, Records Management Division, 1800 South Bell Street, Arlington, VA 20598–3005, facsimile number (202) 646–3347, or email address *FEMA-Information-Collections-Management@dhs.gov.*

SUPPLEMENTARY INFORMATION:

Collection of Information

Title: Application for Community Disaster Loan (CDL) Program.

Type of information collection: Extension, without change, of a currently approved information collection.

OMB Number: 1660–0083.

Form Titles and Numbers: FEMA Form 090–0–1, Certification of Eligibility for Community Disaster Loans; FEMA Form 116–0–1, Promissory Note; FEMA Form 085–0–1, Local Government Resolution—Collateral Security; FEMA Form 090–0–2, Application for Community Disaster Loan.

Abstract: The loan package for the CDL Program provides States, Local and Tribal governments that have suffered substantial loss of tax or other revenues as a result of a major disaster or emergency, the opportunity to obtain financial assistance in order to perform their governmental functions. The loan must be justified on the basis of need and actual expenses.

Affected Public: State, local or Tribal Government.

Estimated Number of Respondents: 50.

Frequency of Response: Once.

Estimated Average Hour Burden per Respondent: Certification of Eligibility for Community Disaster Loans, FEMA Form 090–0–1, 2.5 hours; Promissory Note, FEMA Form 116–0–1, 4 hours; Local Government Resolution—Collateral Security, FEMA Form 085–0–1, 10 hours; Application for Community Disaster Loan, FEMA Form 090–0–2, 1 hour; Annual Financial Report, 1 hour; Letter of Application, 1 hour.

Estimated Total Annual Burden Hours: 975 hours.

Estimated Cost: The estimated annual cost to respondents for the hour burden is $47,523. There are no annual costs to respondents operations and maintenance costs for technical services. There is no annual start-up or capital costs. The cost to the Federal Government is $1,015,220.

Dated: March 21, 2012.

John G. Jenkins, Jr.,

Acting Director, Records Management Division, Mission Support Bureau, Federal Emergency Management Agency, Department of Homeland Security.

[FR Doc. 2012–7697 Filed 3–29–12; 8:45 am]

BILLING CODE 9111–23–P

DEPARTMENT OF HOMELAND SECURITY

Federal Emergency Management Agency

[Internal Agency Docket No. FEMA–4058–DR; Docket ID FEMA–2011–0001]

Indiana; Amendment No. 1 to Notice of a Major Disaster Declaration

AGENCY: Federal Emergency Management Agency, DHS.

ACTION: Notice.

SUMMARY: This notice amends the notice of a major disaster declaration for the State of Indiana (FEMA–4058–DR), dated March 9, 2012, and related determinations.

DATES: *Effective Date:* March 22, 2012.

FOR FURTHER INFORMATION CONTACT: Peggy Miller, Office of Response and Recovery, Federal Emergency Management Agency, 500 C Street SW., Washington, DC 20472, (202) 646–3886.

SUPPLEMENTARY INFORMATION: The notice of a major disaster declaration for the State of Indiana is hereby amended to include the Public Assistance program for the following areas among those areas determined to have been adversely affected by the event declared a major disaster by the President in his declaration of March 9, 2012.

Clark, Jefferson, Ripley, Scott, and Washington Counties for Public Assistance (already designated for Individual Assistance).

The following Catalog of Federal Domestic Assistance Numbers (CFDA) are to be used for reporting and drawing funds: 97.030, Community Disaster Loans; 97.031, Cora Brown Fund; 97.032, Crisis Counseling; 97.033, Disaster Legal Services; 97.034, Disaster Unemployment Assistance (DUA); 97.046, Fire Management Assistance Grant; 97.048, Disaster Housing Assistance to Individuals and Households In Presidentially Declared Disaster Areas; 97.049, Presidentially Declared Disaster Assistance—Disaster Housing Operations for Individuals and Households; 97.050, Presidentially Declared Disaster Assistance to Individuals and Households—Other Needs; 97.036, Disaster Grants—Public Assistance (Presidentially Declared Disasters); 97.039, Hazard Mitigation Grant.

W. Craig Fugate,

Administrator, Federal Emergency Management Agency.

[FR Doc. 2012–7694 Filed 3–29–12; 8:45 am]

BILLING CODE 9111–23–P

DEPARTMENT OF HOMELAND SECURITY

U.S. Customs and Border Protection

Agency Information Collection Activities: Guam-CNMI Visa Waiver Information

AGENCY: U.S. Customs and Border Protection (CBP), Department of Homeland Security.

ACTION: 60-Day Notice and request for comments; Extension of an existing collection of information: 1651–0109.

SUMMARY: As part of its continuing effort to reduce paperwork and respondent burden, CBP invites the general public and other Federal agencies to comment on an information collection requirement concerning the Guam-CNMI Visa Waiver Information (CBP Form I–736). This request for comment is being made pursuant to the Paperwork Reduction Act of 1995 (Pub. L. 104–13).

DATES: Written comments should be received on or before May 29, 2012, to be assured of consideration.

ADDRESSES: Direct all written comments to U.S. Customs and Border Protection, Attn: Tracey Denning, Regulations and Rulings, Office of International Trade, 799 9th Street NW., 5th Floor, Washington, DC 20229–1177.

FOR FURTHER INFORMATION CONTACT: Requests for additional information should be directed to Tracey Denning, U.S. Customs and Border Protection, Regulations and Rulings, Office of International Trade, 799 9th Street NW., 5th Floor, Washington, DC 20229–1177, at 202–325–0265.

SUPPLEMENTARY INFORMATION: CBP invites the general public and other Federal agencies to comment on proposed and/or continuing information collections pursuant to the Paperwork Reduction Act of 1995 (Pub. L. 104–13). The comments should address: (a) Whether the collection of information is necessary for the proper performance of the functions of the agency, including whether the information shall have practical utility; (b) the accuracy of the agency's estimates of the burden of the collection of information; (c) ways to enhance the quality, utility, and clarity of the information to be collected; (d) ways to minimize the burden including the use of automated collection techniques or the use of other forms of information technology; and (e) the annual cost burden to respondents or record keepers from the collection of information (total capital/startup costs and operations and maintenance costs). The comments that are submitted will be summarized and included in the CBP request for Office of Management and Budget (OMB) approval. All comments will become a matter of public record. In this document CBP is soliciting comments concerning the following information collection:

Title: Guam-CNMI Visa Waiver Information.

OMB Number: 1651–0109.

Form Number: CBP Form I–736.

Abstract: Public Law 110–229, which was enacted on May 8, 2008, provides for certain aliens to be exempt from the nonimmigrant visa requirement if seeking entry into Guam or the Commonwealth of the Northern Mariana Islands (CNMI) as a visitor for a maximum stay of 45 days, provided that no potential threat exists to the welfare, safety, or security of the United States or its territories. Applicants under this provision are not subject to routine screening process at American Consulates. Upon arrival at a Guam or CNMI Port-of-Entry, each applicant for admission presents a completed I–736 to CBP. CBP Form I–736 is provided for by 8 CFR 212.1(q) and is accessible at: *http://forms.cbp.gov/pdf/cbp_form_i736.pdf.*

Action: CBP proposes to extend the expiration date of this information collection with no change to the burden hours or to CBP Form I–736.

Type of Review: Extension (without change).

Affected Public: Individuals.

Estimated Number of Respondents: 1,560,000.

Estimated Time per Respondent: 5 minutes.

Estimated Total Annual Burden Hours: 129,480.

Dated: March 26, 2012.

Tracey Denning,

Agency Clearance Officer, U.S. Customs and Border Protection.

[FR Doc. 2012–7622 Filed 3–29–12; 8:45 am]

BILLING CODE 9111–14–P

DEPARTMENT OF HOUSING AND URBAN DEVELOPMENT

[Docket No. FR–5601–N–13]

Federal Property Suitable as Facilities To Assist the Homeless

AGENCY: Office of the Assistant Secretary for Community Planning and Development, HUD.

ACTION: Notice.

SUMMARY: This Notice identifies unutilized, underutilized, excess, and surplus Federal property reviewed by HUD for suitability for possible use to assist the homeless.

FOR FURTHER INFORMATION CONTACT: Juanita Perry, Department of Housing and Urban Development, 451 Seventh Street SW., Room 7262, Washington, DC 20410; telephone (202) 708–1234; TTY number for the hearing- and speech-impaired (202) 708–2565, (these telephone numbers are not toll-free), or call the toll-free Title V information line at 800–927–7588.

SUPPLEMENTARY INFORMATION: In accordance with the December 12, 1988 court order in *National Coalition for the Homeless* v. *Veterans Administration,* No. 88–2503–OG (D.D.C.), HUD publishes a Notice, on a weekly basis, identifying unutilized, underutilized, excess and surplus Federal buildings

and real property that HUD has reviewed for suitability for use to assist the homeless. Today's Notice is for the purpose of announcing that no additional properties have been determined suitable or unsuitable this week.

Dated: March 22, 2012.

Mark R. Johnston,

Deputy Assistant Secretary for Special Needs.

[FR Doc. 2012–7317 Filed 3–29–12; 8:45 am]

BILLING CODE 4210–67–P

DEPARTMENT OF HOUSING AND URBAN DEVELOPMENT

[Docket No. FR–5415–FA–11]

Announcement of Funding Awards: Office of Healthy Homes and Lead Hazard Control Grant Programs for Fiscal Year (FY) 2010

AGENCY: Office of Healthy Homes and Lead Hazard Control, HUD.

ACTION: Announcement of funding awards.

SUMMARY: In accordance with Section 102(a)(4)(C) of the Department of Housing and Urban Development Reform Act of 1989, this announcement notifies the public of funding decisions made by the Department in competitions for funding under the Office of Healthy Homes and Lead Hazard Control Grant Program Notices of Funding Availability. This announcement contains the name and address of the award recipients and the amounts of award awarded under the Consolidated Appropriations Act, 2010 and prior-year appropriations.

FOR FURTHER INFORMATION CONTACT: Dr. Warren Friedman, Office of Healthy Homes and Lead Hazard Control, Department of Housing and Urban Development, Room 8236, 451 Seventh Street SW., Washington, DC 20410, telephone number 202–402–7574. Hearing-and speech-impaired persons may access the number above via TTY by calling the toll free Federal Relay Service at telephone number 1–800–877–8339.

SUPPLEMENTARY INFORMATION: The FY2010 awards were announced June 11, 2010. These awards were the result of competitions announced in a **Federal Register** notice published on September 9, 2010 for Lead Based Paint Hazard Control and Lead Hazard Reduction Demonstration Programs (FR–5415–N–11); on October 4, 2010 for the Healthy Homes Production Program (FR–5415–N–18); on October 4, 2010 for Lead Technical Studies and Healthy Homes Technical Studies Programs (FR–5415–N–13); and on October 4, 2010 for Asthma in Public and Multifamily Housing (FR–5415–N–16). The purpose of the competitions was to award funding for grants and cooperative agreements for the Office of Healthy Homes and Lead Hazard Control Grant Programs. Applications were scored and selected on the basis of selection criteria contained in these Notices. A total of $137,845,454 was awarded under Consolidated Appropriation Act, 2010 (Pub. L. 111–117), and prior year appropriations. In accordance with Section 102(a)(4)(C) of the Department of Housing and Urban Development Reform Act of 1989 (103 Stat. 1987; 42 U.S.C. 3545), the Department is publishing the names, addresses, and the amount of these awards as follows:

1. Lead Based Paint Hazard Control Grant Program

A total of $69,700,000 was awarded to 29 grantees for the *Lead Based Paint Hazard Control Grant Program* and an additional $2,388,637 was awarded to 24 out of the 29 grantees for the Healthy Homes Initiative was under the Consolidated Appropriations Act, 2010: County of Westchester, 148 Martine Avenue, Room 414, White Plains, NY 10601–3311, $1,749,639; Kansas Department of Health and Environment, 1000 SW Jackson, Suite 330, Topeka, KS 66612–1365, $3,100,000; Erie County, 2900 Columbus Avenue, Sandusky, OH 44870–5554, $3,100,000; Minnesota Department of Health, 625 Robert Street North, P.O. Box 64975, St. Paul, MN 55164–0975, $1,742,698; Rhode Island Housing and Mortgage Finance Corp., 44 Washington Street, Providence, RI 02903, $3,100,000; Saginaw County, 1600 N. Michigan Avenue, Saginaw, MI 48602–5395, $3,100,000; Georgia Department of Community Health, 2 Peachtree Street NW., Atlanta, GA 30303–3159, $2,100,000; San Diego Housing Commission, 1122 Broadway, Suite 300, San Diego, CA 92101, $3,100,000; State of North Carolina, 1632 Mail Service Center, Raleigh, NC 27699–1632, $2,596,543; State of Ohio Department of Health, P.O. Box 15278, Columbus, OH 43215–2412, $2,100,000; St. Clair County, 10 Public Square, Belleville, IL 62220–1624, $1,587,581; Vermont Housing and Conservation Board, 58 East State Street, Montpelier, VT 05602–3044, $3,100,000; County of St. Louis, 121 S. Meramee Avenue, Suite 444, Clayton, MO 63105–1725, $2,406,067; City of Sheboygan, 828 Center Avenue, Suite 104, Sheboygan, WI 53081–4442, $1,528,296; Broome County Health Department, 225 Front Street, Binghamton, NY 13905–2448, $2,100,000; City and County of Denver, 201 West Colfax, Dept. 204, Denver, CO 80202–5329, $2,026,698; City of Atlanta, 68 Mitchell Street, Atlanta, GA 30303–0310, $2,100,000; City of Bridgeport, 999 Broad Street, Bridgeport, CT 06604–4060, $3,099,996; City of Brockton, 45 School Street, Brockton, MA 02301–4049, $2,100,000; City of Dubuque Housing & Community Development Dept., 350 W. 6th Street, Suite 312, Dubuque, IA 52001, $3,099,948; City of Duluth, 411 West First, Room 407, Duluth, MN 55802–1197, $1,144,684; City of Greensboro, 300 W. Washington Street, P.O. Box 3136, Greensboro, NC 27402–3136, $3,100,000; City of Lawrence, 200 Common Street, Lawrence, MA 01840–1515, $3,100,000; City of Lorain, 200 West Erie Avenue, Lorain, OH 44052–1606, $2,100,000; City of Omaha, 1819 Farnam Street, Omaha, NE 68183–1000, $2,100,000; Onondaga County, 1100 Civic Center, Syracuse, NY 13202–2908, $3,100,000; Mahoning County, 21 West Boardman Street, Youngstown, OH 44503–1427, $3,100,000; City of Harrisburg, 10 North Second Street, Harrisburg, PA 17101–1637, $2,206,487; City of Providence, 444 Westminster Street, Suite 3A, Providence, RI 02903, $3,100,000.

2. Lead Hazard Reduction Demonstration Grant Program

A total of $48,000,000 was awarded to 12 grantees for the *Lead Hazard Reduction Demonstration Grant Program* under the Consolidated Appropriations Act, 2010: City of Los Angeles, 1200 West 7th Street, 8th Floor, Los Angeles CA, $4,500,000; City of Cincinnati Department of Health CLPP, 3301 Beekman Street, Cincinnati OH, $4,500,000; City of Manchester, Planning and Community Development Community Improvement Program Division, One City Hall Plaza, Manchester NH, $3,967,678; City of Milwaukee Department of Health, 841 North Broadway, Room 118, Milwaukee WI, $4,500,000; City of New York Department of HPD, 100 Gold Street, New York NY, $4,500,000; City of Newark, 920 Broad Street, Newark NY, $4,500,000; City of Schenectady, 105 State Street, Schenectady NY, $3,212,641; City of Hartford, 550 Main Street, Hartford CT, $4,496,236; City of Syracuse, 201 East Washington Street, Syracuse NY, $2,947,266; State of Tennessee, 401 Church Street, 5th Floor, Nashville TN, $4,500,000; City of Somerville, 93 Highland Avenue, Somerville MA, $1,876,179; Cuyahoga Board of Health, 5550 Venture Drive, Parma OH, $4,500,000.

3. Healthy Homes Production Grant Program

A total of $10,000,000 was awarded to 11 grantees for the *Healthy Homes Production Grant Program* under the Consolidated Appropriations Act, 2010: City of Portland OR, 421 South West Sixth Avenue, Suite 500, Portland OR, $1,000,000; City of Dubuque Housing and Community Development, 350 West 6th Street, Suite 312, Dubuque IA, $999,973; City of New London, 111 Union Street, New London CT, $200,482; City of Newark NJ, 920 Broad Street, Newark NJ, $1,000,000; City of Philadelphia Department of Public Health, 2100 West Girard Avenue, Philadelphia PA, $1,000,000; Southeastern Michigan Health Association, 3011 West Grand Boulevard, Suite 200 Fisher Building; Detroit MI, $999,995; Sonora Environmental Research Institute Inc., 3202 East Grant Road, Tucson AZ, $999,550; San Diego Housing Commission, 1122 Broadway Suite 300, San Diego CA, $1,000,000; Rebuilding Together Inc., 1899 L Street NW., Washington DC, $1,000,000; Wisconsin Department of Health Services, 1 West Wilson Street, P O Box 7850, Madison WI, $1,000,000; The Center for Working Families Inc., 477 Winsor Street Suite 101, Atlanta GA, $800,000

4. Lead Technical Studies Grant Program

A total of $1,795,831 was awarded to 4 grantees for the *Lead Technical Studies Grant Program* under the Consolidated Appropriations Act, 2010: The Board of Trustees of the University of Illinois, 809 Marshfield Avenue, MB 502, M/C 551, Chicago, IL 60612, $499,999; SIROM Scientific Solutions LLC, 1 Normal Avenue, CSAM RI–121A, Montclair, NJ 07043, $499,694; The Providence Plan, 10 Davol Square, Suite 300, Providence, RI 02903, $298,000; University of Texas at Arlington, 701 South Nedderman Drive, P.O. Box 19145, Arlington TX 76019, $498,138.

5. Healthy Homes Technical Studies Grant Program

A total of $4,000,000 was awarded to 5 grantees for *Healthy Homes Technical Studies Grant Program* under the Consolidated Appropriations Act, 2010: University of Cincinnati, 51 Goodman Drive, University Hall, Suite 530, P.O. Box 210222, Cincinnati, OH 45221, $268,709; Massachusetts Department of Public Health, 250 Washington Street, Boston, MA 02108, $949,071; Tulane University, 1430 Tulane Avenue, EP 15, New Orleans, LA 70112, $942,465; President and Fellows of Harvard College, 677 Huntington Avenue, Boston, MA 02115, $942,788; University of Illinois at Chicago, 809 South Marshfield Avenue, MB 502, M/C 551, Chicago, IL 60612, $896,967.

6. Asthma Interventions in Public and Assisted Multifamily Housing Grant Program

A total of $2,060,986 was awarded to 4 grantees for the *Asthma Interventions In Public And Assisted Multifamily Housing Grant Program* under the Consolidated Appropriations Act, 2010: American Lung Association of the Upper Midwest, 490 Concordia Avenue, Saint Paul, MN 55103, $538,000; Sinai Health System, 1501 South California Avenue, Chicago, IL 60608, $549,000; New York Academy of Medicine. 1216 Fifth Avenue, New York, NY 10029, $549,000; University of Massachusetts, Lowell, 600 Suffolk Street, 2nd Floor, Lowell, MA 01854, $424,986.

Dated: March 26, 2012.

Warren Friedman,

Acting Deputy Director, Office of Healthy Homes and Lead Hazard Control.

[FR Doc. 2012–7735 Filed 3–29–12; 8:45 am]

BILLING CODE 4210–67–P

DEPARTMENT OF HOUSING AND URBAN DEVELOPMENT

[Docket No. FR–5500–FA–02]

Announcement of Funding Awards: Office of Healthy Homes and Lead Hazard Control Grant Programs for Fiscal Year (FY) 2011

AGENCY: Office of Healthy Homes and Lead Hazard Control, HUD.

ACTION: Announcement of funding awards.

SUMMARY: In accordance with Section 102(a)(4)(C) of the Department of Housing and Urban Development Reform Act of 1989, this announcement notifies the public of funding decisions made by the Department in competitions for funding under the Office of Healthy Homes and Lead Hazard Control Grant Program Notices of Funding Availability. This announcement contains the name and address of the award recipients and the amounts of award awarded under the Consolidated Appropriations Act, 2011 and prior-year appropriations.

FOR FURTHER INFORMATION CONTACT: Dr. Warren Friedman, Office of Healthy Homes and Lead Hazard Control, Department of Housing and Urban Development, Room 8236, 451 Seventh Street SW., Washington, DC 20410, telephone number 202–402–7574. Hearing- and speech-impaired persons may access the number above via TTY by calling the toll free Federal Relay Service at telephone number 1–800–877–8339.

SUPPLEMENTARY INFORMATION: The FY2011 awards were announced May 9, 2011. These awards were the result of competitions announced in a **Federal Register** notice published on May 18, 2011 for Lead Based Paint Hazard Control and Lead Hazard Reduction Demonstration Programs (FR–5500–N–02); on May 18, 2011 for the Healthy Homes Production Program (FR–5500–N–03); on May 9, 2011 for Lead Technical Studies and Healthy Homes Technical Studies Programs (FR–5500–N–15); and on May 20, 2011 for Asthma in Public and Multifamily Housing (FR–5500–N–06). The purpose of the competitions was to award funding for grants and cooperative agreements for the Office of Healthy Homes and Lead Hazard Control Grant Programs. Applications were scored and selected on the basis of selection criteria contained in these Notices. A total of $112,223,940 was awarded under the HUD appropriations act for fiscal year 2011, namely, the Department of Defense and Full-Year Continuing Appropriations Act, 2011, Public Law 112–10 and prior year appropriations. In accordance with Section 102(a)(4)(C) of the Department of Housing and Urban Development Reform Act of 1989 (103 Stat. 1987; 42 U.S.C. 3545), the Department is publishing the names, addresses, and the amount of these awards as follows:

1. Lead Based Paint Hazard Control Grant Program

A total of $43,206,000 was awarded to 22 grantees for the Lead Based Paint Hazard Control Grant Program and an additional $1,999,971 was awarded to 20 out of the 29 grantees for the Healthy Homes Initiative under the Consolidated Appropriations Act, 2011: City of Phoenix, 200 W. Washington Street, 4th Floor, Phoenix, AZ 85003–1611, $2,475,000; City of Fresno, 2600 Fresno Street, 3rd Floor, Fresno, CA 93721–3604, $2,475,000; City of Pomona, 505 South Garvey Avenue, P.O. Box 660, Pomona, CA 91766–3322, $2,475,000; City of South Lake Tahoe, 1901 Airport Drive, Suite 107, South Lake Tahoe, CA 96150–7004, $2,000,000; County of Alameda, 2000 Embarcadero, Suite #300, Oakland, CA 94606–5334, $2,134,863; City of Waterbury, One Jefferson Square, Waterbury, CT 06706–1102, $2,475,000; City of Davenport, 226 West 4th Street, Davenport, IA 52801–1308, $2,475,000; City of Waterloo, 620

Mulberry Street, Waterloo, IA 50703–5713, $1,705,557; Polk County, 111 Court Street, Suite 300, Des Moines, IA 50309–2218, $2,475,000; County of Kane, 719 Batavia Avenue, Geneva, IL 60134–3077, $1,040,796; County of Peoria, 2116 N. Sheridan Road, Peoria, IL 61604–3457, $2,475,000; Kentucky Department for Public Health Environmental Lead Program, 275 East Main Street, Mail Stop HS1E–B, Frankfort, KY 40621–0001, $1,099,971; City of Boston, 26 Court Street, Boston, MA 02108–2501, $2,475,000; City of Lynn, 3 City Hall Square, Lynn, MA 01901–1019, $2,469,051; City of Muskegon, 900 Terrace, Muskegon, MI 49442–3357, $1,100,000; City of High Point, 211 S. Hamilton, High Point, NC 27260–5232, $2,475,000; Erie County, 95 Franklin Street, Buffalo, NY 14202–3904, $2,375,000; Redevelopment Authority of the City of Erie (ERA), 1001 State Street, Suite 1100, Erie, PA 16501–1313, $2,475,000; City of Petersburg, 135 N. Union Street, Petersburg, VA 23803–3267, $1,100,000; City of Roanoke, 215 Church Avenue, Room 310 North, Roanoke, VA 24011–1518, $1,855,733; City of Burlington, 149 Church Street, City Hall, Burlington, VT 05401–8412, $2,475,000; City of Waukesha, A Municipal Corporation, City Hall, 201 Delafield Street, Room 200, Waukesha, WI 53189–3649, $1,100,000.

2. Lead Hazard Reduction Demonstration Grant Program

A total of $47,904,000 was awarded to 17 grantees for the Lead Hazard Reduction Demonstration Grant Program under the Consolidated Appropriations Act, 2011: City of Chicago, Department of Public Health, 333 South State Street, Room 200, Chicago, IL 60604, $3,000,000; City of St. Louis Community Development Administration, 1015 Locust Street, Suite 1200, St. Louis, MO 63101, $3,000,000; Hennepin County, 417 North 5th Street, Suite 320, Minneapolis, MN 55401, $3,000,000; State of Connecticut Department of Social Services, 25 Sigourney Street, Hartford, CT 06106, $3,000,000; City of San Antonio, 1400 South Flores, San Antonio, TX 78204, $3,000,000; City of Memphis, 125 North Main, Memphis, TN 38103, $3,000,000; City of Columbus Department of Development, 50 West Gay Street, 3rd Floor, Columbus, OH 4321, $3,000,000; Health and Hospital Corporation of Marion County, 3838 North Rural Street, Indianapolis, IN 46205, $3,000,000; City of Philadelphia, 2100 West Girard Avenue, Philadelphia, PA 19130, $3,000,000; Houston Department of Health and Human Services, 8000 North Stadium Drive, 2nd Floor, Houston, TX 77054, $3,000,000; City of Austin, 1000 East 11th Street, Suite 200, Austin, TX 78702, $2,500,000; City of Wilmington, 800 North French Street, Wilmington, DE 19801, $2,589,695; County of Harris, 1001 Preston, Suite 900, Houston, TX 77002, $2,700,000; Winnebago County Health Department, 401 Division Street, Rockford, IL 61104, $2,885,700; Malden Redevelopment Authority-City of Malden, Massachusetts, 200 Pleasant Street, Malden, MA 02148, $3,000,000; City of Lansing, 124 West Michigan Avenue, Lansing, MI 48933, $1,728,605.

3. Healthy Homes Production Grant Program

A total of $15,623,257 was awarded to 9 grantees for the Healthy Homes Production Grant Program under the Consolidated Appropriations Act, 2010: Environmental Health Watch, 3500 Lorain Avenue, Suite 301, Cleveland, OH 44113, $929,990; Hennepin County, 417 North 5th Street, Suite 320, Minneapolis, MN 55401, $1,860,000; City of Los Angeles, 1200 West 7th Street, 8th Floor, Los Angeles, CA, 90017, $1,860,000; Coalition to End Childhood Lead Poisoning, 2714 Hudson Street, Baltimore, MD 21224, $930,000; State of Connecticut Department of Social Services, 25 Sigourney Street, Hartford, CT 06106, $1,860,000; City of Minneapolis, 250 South 4th Street, Room 414, Minneapolis, MN 55415, $1,860,000; Health and Hospital Corporation of Marion County, 3838 North Rural Street, Indianapolis, IN 46205, $1,713,122; City of Akron, 166 South High Street, Municipal Building, Room 401, Akron, OH 44308, $1,860,000; City of San Antonio, 1400 South Flores, San Antonio, TX 78204, $1,126,888.

4. Lead Technical Studies Grant Program

A total of $545,513 was awarded to 2 grantees for the Lead Technical Studies Grant Program under the Consolidated Appropriations Act, 2011: QuanTech, Inc., 2020 14th Street North, Suite 560, Arlington, VA 22201–2512, $248,100; Tulane University, 1430 Tulane Avenue, EP–15, New Orleans, LA 70112–2699, $251,900.

5. Healthy Homes Technical Studies Grant Program

A total of $1,840,712 was awarded to 3 grantees for Healthy Homes Technical Studies Grant Program under the Consolidated Appropriations Act, 2011: North Carolina State, 2701 Sullivan Dr., Admin III; Box 7514, Raleigh, NC 27695–7614, $541,179; National Center for Healthy Housing, 10320 Little Patuxent Pkwy, Columbia, MD 21044–3346, $649,533; The Trustees of Columbia University in the City of New York, 630 West 168th Street—Box 49, New York 10032–3702, $650,000.

6. Asthma Interventions in Public and Assisted Multifamily Housing Grant Program

A total of $1,150,000 was awarded to 3 grantees for the Asthma Interventions in Public and Assisted Multifamily Housing Grant Program under the Consolidated Appropriations Act, 2011: Michigan Department of Community Health, P.O. Box 30195, 201 Townsend Street, Lansing, MI 48909–0195, $450,000; Minnesota Department of Health, 625 Robert Street North, P.O. Box 64975, St. Paul, MN 55164–0975, $409,288; Boston Medical Center Corporation, One Boston Medical Center Place, Boston, MA 02118–2392, 450,000.

Dated: March 26, 2012.

Warren Friedman,

Acting Deputy Director, Office of Healthy Homes and Lead Hazard Control.

[FR Doc. 2012–7722 Filed 3–29–12; 8:45 am]

BILLING CODE 4210–67–P

DEPARTMENT OF THE INTERIOR

Office of the Secretary

Renewal of Information Collection; OMB Control Number 1040–0001, DOI Programmatic Clearance for Customer Satisfaction Surveys

AGENCY: Department of the Interior.

ACTION: Notice of submission to OMB; request for comments.

SUMMARY: We (Department of the Interior, DOI) have submitted a request to the Office of Management and Budget (OMB) to approve the information collection (IC) described below. This IC is scheduled to expire March 31, 2012. As required by the Paperwork Reduction Act of 1995 and as part of our continuing efforts to reduce paperwork and respondent burden, we invite the general public and other Federal agencies to take this opportunity to comment on this IC.

DATES: OMB has 60 days to review this request but may act after 30 days, therefore you should submit your comments on or before April 30, 2012.

ADDRESSES: You may submit your comments directly to the Desk Officer for the Department of the Interior (OMB control #1040–0001), Office of Information and Regulatory Affairs,

OMB, by email at *oira_docket@omb.eop.gov* or by fax at 202–395–5806. Please also send a copy of your comments to the Department of the Interior; Office of Policy Analysis; Attention: Don Bieniewicz; Mail Stop 3530; 1849 C Street NW., Washington, DC 20240, or by fax to 202–208–4867, or by email to *Donald_Bieniewicz@ios.doi.gov.* Reference ''DOI Programmatic Clearance for Customer Satisfaction Surveys'' in your email subject line. Include your name and return address in your email message and mark your message for return receipt.

FOR FURTHER INFORMATION CONTACT: Contact Don Bieniewicz on 202–208–4915. You may also review the submitted information collection request online at *http://www.reginfo.gov.* Follow the instructions to review Department of the Interior collections under review by OMB.

SUPPLEMENTARY INFORMATION:

I. Abstract

The Government Performance and Results Act of 1993 (GPRA) (Pub.L. 103–62) requires agencies to ''improve Federal program effectiveness and public accountability by promoting a new focus on results, service quality, and customer satisfaction.'' In order to fulfill this responsibility, DOI bureaus and offices must collect data from their respective user groups to better understand the needs and desires of the public and to respond accordingly. Executive Order 12862 ''Setting Customer Service Standards'' also requires all executive departments to ''survey customers to determine * * * their level of satisfaction with existing services.'' Executive Order 13571 ''Streamlining Service Delivery and Improving Customer Service'' further mandates ''establishing mechanisms to solicit customer feedback on Government services and using such feedback regularly to make service improvements.''

We use customer satisfaction surveys to help us fulfill our responsibilities to provide excellence in government by proactively consulting with those we serve. This programmatic clearance provides an expedited approval process for DOI bureaus and offices to conduct customer research through external surveys such as questionnaires and comment cards.

The proposed renewal covers all of the organizational units and bureaus in DOI. Information obtained from customers by bureaus and offices will be provided voluntarily. Questions may be asked in languages other than English (*e.g.,* Spanish) where appropriate.

Topic areas serve as a guide within which the bureaus and offices will develop questions. No one survey will cover all the topic areas. The topic areas include:

(1) Delivery, quality and value of products, information, and services. Respondents may be asked for feedback regarding the following attributes of the information, service, and products provided:

(a) Timeliness
(b) Consistency
(c) Accuracy
(d) Ease of Use and Usefulness
(e) Ease of Information Access
(f) Helpfulness
(g) Quality
(h) Value for fee paid for information/product/service.

(2) Management practices. This area covers questions relating to how well customers are satisfied with DOI management practices and processes, what improvements they might make to specific processes, and whether or not they feel specific issues were addressed and reconciled in a timely, courteous, and responsive manner.

(3) Mission management. We will ask customers to provide satisfaction data related to DOI's ability to protect, conserve, provide access to, provide scientific data about, and preserve natural, cultural, and recreational resources that we manage, and how well we are carrying out our trust responsibilities to American Indians.

(4) Rules, regulations, policies. This area focuses on obtaining feedback from customers regarding fairness, adequacy, and consistency in enforcing rules, regulations, and policies for which DOI is responsible. It will also help us understand public awareness of rules and regulations and whether or not they are explained in a clear and understandable manner.

(5) Interactions with DOI Personnel and Contractors. Questions will range from timeliness and quality of interactions to skill level of staff providing the assistance, as well as their courtesy and responsiveness during the interaction.

(6) General demographics. Some general demographics may be gathered to augment satisfaction questions so that we can better understand the customer and improve how we serve that customer. We may ask customers how many times they have used a service, visited a facility within a specific timeframe, their ethnic group, or their race.

All requests to collect information under the auspices of this proposed renewal will be carefully evaluated to ensure consistency with the intent, requirements, and boundaries of this programmatic clearance. Interior's Office of Policy Analysis will conduct an administrative and technical review of each specific request in order to ensure statistical validity and soundness. All information collections are required to be designed and deployed based upon acceptable statistical practices and sampling methodologies, and procedures that account for and minimize non-response bias, in order to obtain consistent, valid data and statistics that are representative of the target populations. After completion of its review, the Office of Policy Analysis will forward the specific request to OMB for expedited approval.

II. Data

OMB Control Number: 1040–0001.

Title: DOI Programmatic Clearance for Customer Satisfaction Surveys.

Form Number(s): None.

Type of Request: Extension of an approved collection.

Affected Public: DOI customers. We define customers as anyone who uses DOI resources, products, or services. This includes internal customers (anyone within DOI) as well as external customers (e.g., the American public, representatives of the private sector, academia, other government agencies). Depending upon their role in specific situations and interactions, citizens and DOI stakeholders and partners may also be considered customers. We define stakeholders to mean groups or individuals who have an expressed interest in and who seek to influence the present and future state of DOI's resources, products, and services. Partners are those groups, individuals, and agencies who are formally engaged in helping DOI accomplish its mission.

Respondent's Obligation: Voluntary.

Frequency of Collection: On occasion.

Estimated Annual Number of Respondents: 120,000. We estimate approximately 60,000 respondents will submit DOI customer satisfaction surveys and 60,000 will submit comment cards.

Estimated Total Annual Responses: 120,000.

Estimated Time Per Response: 15 minutes for a customer survey; 3 minutes for a comment card.

Estimated Total Annual Burden Hours: 18,000.

III. Request for Comments

On December 12, 2011, we published in the **Federal Register** (76 FR 77244) a request for public comments on this

proposed renewal. We received one comment expressing general criticism of DOI management. Because the comment provided no specifics, we have not modified the proposed renewal. The public now has a second opportunity to comment on this renewal. We invite comments concerning this IC on:

(1) Whether or not the collection of information is necessary, including whether or not the information will have practical utility;

(2) The accuracy of our estimate of the burden for this collection of information;

(3) Ways to enhance the quality, utility, and clarity of the information to be collected; and

(4) Ways to minimize the burden of the collection of information on respondents.

Comments that you submit in response to this notice are a matter of public record. Before including your address, phone number, email address, or other personal identifying information in your comment, you should be aware that your entire comment, including your personal identifying information, may be made publicly available at any time.

While you can ask us or OMB in your comment to withhold your personal identifying information from public review, we cannot guarantee that we will be able to do so.

Dated: March 26, 2012.

Benjamin Simon,

Assistant Director, Office of Policy Analysis, U.S. Department of the Interior.

[FR Doc. 2012–7665 Filed 3–29–12; 8:45 am]

BILLING CODE 4310–RK–P

DEPARTMENT OF THE INTERIOR

Fish and Wildlife Service

[FWS–R6–R–2012–N024; FF06R06000–FXRS1265066CCP0S2–123]

Benton Lake National Wildlife Refuge Complex, Great Falls, MT; Comprehensive Conservation Plan and Environmental Assessment

AGENCY: Fish and Wildlife Service, Interior.

ACTION: Notice of availability; request for comments.

SUMMARY: We, the U.S. Fish and Wildlife Service (Service), announce the availability of a draft comprehensive conservation plan and environmental assessment (Draft CCP/EA) for Benton Lake National Wildlife Refuge Complex for public review and comment. The Draft CCP/EA describes our proposal for managing the refuge complex for the next 15 years.

DATES: To ensure consideration, please send your written comments by May 18, 2012.

We will announce upcoming public meetings in local news media.

ADDRESSES: You may submit comments or requests for copies or more information by any of the following methods. You may request hard copies or a CD–ROM of the documents.

Email: toni_griffin@fws.gov. Include ''Benton Lake Refuge Complex Draft CCP/EA'' in the subject line of the message.

U.S. Mail: Toni Griffin, Planning Team Leader, Suite 300, 134 Union Boulevard, Lakewood, CO 80228.

Information Request: A copy of the Draft CCP/EA may be obtained by writing to U.S. Fish and Wildlife Service, Division of Refuge Planning, 134 Union Boulevard, Suite 300, Lakewood, Colorado 80228; or by download from *http://mountain-prairie.fws.gov/planning*.

FOR FURTHER INFORMATION CONTACT: Toni Griffin, 303–236–4378 (phone); 303–236–4792 (fax); or *toni_griffin@fws.gov* (email) or David C. Lucas, 303–236–4366 (phone): 303–236–4792 (fax): or *david_c_lucas@fws.gov*.

SUPPLEMENTARY INFORMATION:

Introduction

The 163,304-acre Benton Lake National Wildlife Refuge Complex (refuge complex) is part of the National Wildlife Refuge System and is located in northwest and north-central Montana. Spanning both sides of the Continental Divide, the refuge complex is a collection of diverse landscapes, from wetlands and mixed-grass prairie in the east to forests, intermountain grasslands, rivers, and lakes in the west. The refuge complex oversees management of 2 refuges, 1 wetland management district containing 22 waterfowl production areas, 3 conservation areas, and administers 216 easements within the Refuge System:

- Benton Lake National Wildlife Refuge was established in 1929 and consists of 12,383 fee-title acres and 76.88 acres of right-of-way easement. It is located on the northern Great Plains, 50 miles east of the Rocky Mountains and 12 miles north of Great Falls, Montana.
- Benton Lake Wetland Management District was established in 1975. It includes 10 counties (Cascade, Chouteau, Glacier, Hill, Lewis and Clark, Liberty, Pondera, Powell, Teton, Toole), 22 waterfowl production areas, and 4 distinct easement programs.
- Blackfoot Valley Conservation Area (CA) was established in 1995 and expanded in 2011. This conservation easement program has the potential to protect up to 103,500 acres in the Blackfoot Valley by buying conservation easements on private land within the 824,024-acre project area.
- Rocky Mountain Front CA was established in 2005 and expanded in 2011. This conservation easement program has the potential to protect up to 295,000 acres in the Rocky Mountain Front (Front) by buying conservation easements on private land within the 918,000-acre project area.
- Swan River National Wildlife Refuge was established in 1973 and consists of 1,568.81 acres. It is located in the Swan Valley, 38 miles southeast of Creston, Montana.
- Swan Valley CA was authorized in 2011. This conservation area has the potential to protect up to 10,000 acres in the Swan Valley by buying conservation easements on private land, and up to 1,000 acres in fee-title land next to the Swan River Refuge within the 187,400-acre project area.

Refuge complex lands and waters are important corridors for birds, fish, and other wildlife. Across the refuge complex, there exists a very high level of diversity. Wildlife ranges from migratory waterfowl to grassland birds, to native trout, to ''charismatic mega fauna'' such as elk, gray wolf, and grizzly bear. Refuge complex lands harbor Federal and State species of concern. Threatened and endangered species include bull trout, grizzly bear, Canada lynx, and water howellia. Candidate species include Sprague's pipit and wolverine. The refuge complex is of great value to waterfowl and shorebirds, as well as other migrating water-dependent bird species, because of the diversity of wetland and upland habitats that provide for the diverse life cycle needs of these species. The refuge complex has large, intact areas of native prairie that provide habitat for grassland birds that are one of the most imperiled groups of migratory birds nationwide.

Background

The CCP Process

The National Wildlife Refuge System Administration Act of 1966 (16 U.S.C. 668dd–668ee) (Refuge Administration Act), as amended by the National Wildlife Refuge System Improvement Act of 1997, requires us to develop a

CCP for each national wildlife refuge. The purpose for developing a CCP is to provide refuge managers with a 15-year plan for achieving refuge purposes and contributing toward the mission of the National Wildlife Refuge System, consistent with sound principles of fish and wildlife management, conservation, legal mandates, and our policies. In addition to outlining broad management direction on conserving wildlife and their habitats, CCPs identify wildlife-dependent recreational opportunities available to the public, including opportunities for hunting, fishing, wildlife observation and photography, and environmental education and interpretation. We will review and update the CCP at least every 15 years in accordance with the Refuge Administration Act.

Public Outreach

A Notice of Intent to prepare a CCP was published in the **Federal Register** August 18, 2008 (73, FR 48237). During scoping and throughout the process, we requested public comments and considered and incorporated them in numerous ways. Public outreach has included local news media announcements, a planning update, and several public scoping meetings. In addition, a biological workshop to discuss management issues and options related to water management, selenium contamination, and public use at the Benton Lake Refuge took place in Great Falls, Montana June 2011. Comments we received cover topics such as land protection, climate change, wetland health, water quality, hunting, wildlife observation, and environmental education. We have considered and evaluated all of these comments, with many incorporated into the various alternatives addressed in the Draft CCP and the EA.

CCP Alternatives We Are Considering

During the scoping process with which we started work on this Draft CCP, we, other governmental partners, and the public raised several issues. Our Draft CCP addresses these issues. The Draft CCP/EA includes the analyses of two different sets of alternatives. The first analysis includes three alternatives for managing the refuge complex. The second analysis includes five alternatives for addressing the declining condition of the Benton Lake Refuge wetlands. A full description of each analysis and the associated alternatives is in the EA. The alternatives are summarized below.

Alternatives for the Refuge Complex

Alternative A, Current Management (No Action). Management activity being conducted by the Service would remain the same. The Service would not develop any new management, restoration, or education programs at the refuge complex. Current habitat and wildlife practices benefiting migratory species and other wildlife would not be expanded or changed. Habitat management within the refuge complex has been focused on benefitting migratory birds, primarily waterfowl. Other species are considered through land protection programs and partnerships (for example, grizzly bear and bull trout). Staff would continue monitoring, inventory, and research activities at their current levels. Money and staff levels would remain the same with little change in overall trends. Programs would follow the same direction, emphasis, and intensity as they do at present.

Alternative B. Management efforts would be focused on maintaining the resiliency and sustainability of native grasslands, forests, shrublands, and unaltered wetlands throughout the refuge complex by emulating natural processes. Prescribed fire, grazing, and other management techniques would be used to replicate historical disturbance factors. Where feasible, restoration of native uplands would occur. For wetlands where water management capability exists, management efforts would be focused on achieving conditions that are more consistent by minimizing the effects of drought periods of the northern Great Plains and Rocky Mountains. Management would be active and intensive to keep these conditions in a consistent state for wildlife using tools such as artificial flooding, drawdowns, fire, rest, and grazing. Changes in the refuge complex's research and monitoring, staff, operations, and infrastructure would likely be required to achieve this alternative's goals and objectives. The success of these efforts and programs would depend on added staff, research, and monitoring programs, operations money, infrastructure, and new and expanded partnerships.

Alternative C, the Proposed Action. Emphasis would be placed on self-sustaining systems with ecological processes functioning for long-term productivity. Management efforts would focus on maintaining and restoring ecological processes including natural communities and the dynamics of the ecosystems of the northern Great Plains and northern Rocky Mountains. Conservation of native landscapes would be a high priority accomplished by protecting habitats from conversion using a combination of partnerships, easements and fee-title lands, and through active management and proactive enforcement of easements. Management actions such as prescribed fire, grazing, and invasive species control would be used to maintain the resiliency and sustainability of Service-owned lands throughout the refuge complex. Whenever possible, habitat conditions would be allowed fluctuate with climatically driven wet and dry cycles, which are essential for long-term productivity. The success of these efforts and programs would depend on added staff, research, and monitoring programs, operations money, infrastructure, and new and expanded partnerships.

Alternatives for Benton Lake National Wildlife Refuge

The Service and the public have identified declining wetland productivity and selenium contamination, and its effects on all aspects of management at the refuge, as one of the most critical situations needing to be addressed in the CCP planning process. To fully understand what is causing this decline, the Service met with consultants from Greenbrier Wetland Service in 2009 to understand what changes had occurred in the Benton Lake wetlands over time and how this might relate to the observed declines in productivity, increases in invasive species and increasing selenium contamination. In addition, the United States Geological Survey developed a water budget model based on more than 30 years of data and selenium model based on research conducted by USGS and the University of Montana on the refuge. These models, coupled with a hydro geomorphic assessment, were used to develop and analyze the management alternatives and to select one as the proposed action for the refuge.

The Service developed and analyzed five alternatives representing a full range of options to address the declining condition of the Benton Lake Refuge wetlands. The Service selected ''Self-sustaining Systems through Adaptive Resource Management'' as the Proposed Action. Under the Proposed Action, the Service will (1) start to address the selenium load, and (2) work throughout the watershed to reduce incoming selenium, and (3) monitor results and make necessary changes to pumping and water management infrastructure to achieve the long-term goal of a more natural process. The Service identified this alternative as the best option for

addressing the declining condition of wetlands based on the effectiveness of treatment, environmental and social consequences, and cost.

Next Steps

After this comment period ends, we will analyze the comments we may issie a finding of no significant impact and final CCP, or if significant impacts are identified, the Service will prepare an environmental impact statement.

Public Availability of Comments

Before including your address, phone number, email address, or other personal identifying information in your comment, you should be aware that your entire comment—including your personal identifying information—may be made publicly available at any time. While you can ask us in your comment to withhold your personal identifying information from public review, we cannot guarantee that we will be able to do so.

Dated: February 29, 2012.

Matt Hogan

Acting Deputy Regional Director, Mountain-Prairie Region, U.S. Fish and Wildlife Service.

[FR Doc. 2012–7667 Filed 3–29–12; 8:45 am]

BILLING CODE 4310–55–P

DEPARTMENT OF THE INTERIOR

Fish and Wildlife Service

[FWS–R9–IA–2012–N075; FXIA16710900000P5–123–FF09A30000]

Endangered Species; Receipt of Applications for Permit

AGENCY: Fish and Wildlife Service, Interior.

ACTION: Notice of receipt of applications for permit.

SUMMARY: We, the U.S. Fish and Wildlife Service, invite the public to comment on the following applications to conduct certain activities with endangered species. With some exceptions, the Endangered Species Act (ESA) prohibits activities with listed species unless Federal authorization is acquired that allows such activities.

DATES: We must receive comments or requests for documents on or before April 30, 2012.

ADDRESSES: Brenda Tapia, Division of Management Authority, U.S. Fish and Wildlife Service, 4401 North Fairfax Drive, Room 212, Arlington, VA 22203; fax (703) 358–2280; or email *DMAFR@fws.gov.*

FOR FURTHER INFORMATION CONTACT: Brenda Tapia, (703) 358–2104 (telephone); (703) 358–2280 (fax); *DMAFR@fws.gov* (email).

SUPPLEMENTARY INFORMATION:

I. Public Comment Procedures

A. How do I request copies of applications or comment on submitted applications?

Send your request for copies of applications or comments and materials concerning any of the applications to the contact listed under **ADDRESSES**. Please include the **Federal Register** notice publication date, the PRT-number, and the name of the applicant in your request or submission. We will not consider requests or comments sent to an email or address not listed under **ADDRESSES**. If you provide an email address in your request for copies of applications, we will attempt to respond to your request electronically.

Please make your requests or comments as specific as possible. Please confine your comments to issues for which we seek comments in this notice, and explain the basis for your comments. Include sufficient information with your comments to allow us to authenticate any scientific or commercial data you include.

The comments and recommendations that will be most useful and likely to influence agency decisions are: (1) Those supported by quantitative information or studies; and (2) Those that include citations to, and analyses of, the applicable laws and regulations. We will not consider or include in our administrative record comments we receive after the close of the comment period (see **DATES**) or comments delivered to an address other than those listed above (see **ADDRESSES**).

B. May I review comments submitted by others?

Comments, including names and street addresses of respondents, will be available for public review at the address listed under **ADDRESSES**. The public may review documents and other information applicants have sent in support of the application unless our allowing viewing would violate the Privacy Act or Freedom of Information Act. Before including your address, phone number, email address, or other personal identifying information in your comment, you should be aware that your entire comment—including your personal identifying information—may be made publicly available at any time. While you can ask us in your comment to withhold your personal identifying information from public review, we cannot guarantee that we will be able to do so.

II. Background

To help us carry out our conservation responsibilities for affected species, and in consideration of section 10(a)(1)(A) of the Endangered Species Act of 1973, as amended (16 U.S.C. 1531 *et seq.*), along with Executive Order 13576, ''Delivering an Efficient, Effective, and Accountable Government,'' and the President's Memorandum for the Heads of Executive Departments and Agencies of January 21, 2009—Transparency and Open Government (74 FR 4685; January 26, 2009), which call on all Federal agencies to promote openness and transparency in Government by disclosing information to the public, we invite public comment on these permit applications before final action is taken.

III. Permit Applications

A. Endangered Species

Applicant: Paulina Hechenleitner, Royal Botanic Garden, Edinburgh, UK; PRT–63796A

The applicant requests a permit to export dried leaf material from Hawaiian vetch (*Vicia menziessii*) to the Royal Botanic Garden, Edinburgh, United Kingdom, for the purpose of enhancement of the species through scientific research. This notification covers activities to be conducted by the applicant over a 5-year period.

Applicant: North Carolina Zoological Park, Asheboro, NC; PRT–679557

The applicant requests renewal of their captive-bred wildlife registration under 50 CFR 17.21(g) for the following families, genus, and species, to enhance their propagation or survival. This notification covers activities to be conducted by the applicant over a 5-year period.

Family:
- Canidae
- Cercopithecidae
- Equidae
- Felidae (*does not* include jaguar, margay or ocelot)
- Hominidae
- Indriidae
- Lemuridae
- Columbidae
- Gruidae
- Sturnidae (*does not* include *Aplonis pelzelni*)
- Crocodylidae (*does not* include American crocodile)
- Testudinidae
- Varanidae

Species:
- Parma wallaby (*Macropus parma)*

Applicant: The Maryland Zoo, Baltimore, MD; PRT–671151

The applicant requests renewal and amendment of their captive-bred

wildlife registration under 50 CFR 17.21(g) for the following families, genus, and species, to enhance their propagation or survival. This notification covers activities to be conducted by the applicant over a 5-year period.

Families:
- Callithricidae
- Cercopithecidae (includes *Colobus*)
- Felidae (does not include jaguar, margay or ocelot)
- Hominidae
- Hylobatidae
- Macropodidae
- Gruidae
- Sturnidae

Species:
- Jackass penguin (*Spheniscus demersus*)
- Dama gazelle (*Nanger dama*)

Applicant: Northeastern Wisconsin Zoo, Green Bay, WI; PRT–189854

The applicant requests renewal of their captive-bred wildlife registration under 50 CFR 17.21(g) for the snow leopard (*Uncia uncial)*, and jackass penguin (*Spheniscus demersus*) to enhance their propagation or survival. This notification covers activities to be conducted by the applicant over a 5-year period.

Applicant: Bruce Fairchild, Johnson City, TX; PRT–69947A

The applicant requests a captive-bred wildlife registration under 50 CFR 17.21(g) for the barasingha (*Rucervus duvaucelii*), Arabian oryx (*Oryx leucoryx*), scimitar-horned oryx (*Oryx dammah*), addax (*Addax nasomaculatus*), bontebok (*Damaliscus pygargus pygargus*) and Hartmann's mountain zebra (*Equus zebra hartamnae*), to enhance their propagation or survival. This notification covers activities to be conducted by the applicant over a 5-year period.

Applicant: Bruce Fairchild, Johnson City, TX; PRT–69946A

The applicant requests a permit authorizing interstate and foreign commerce, export, and cull of excess Arabian oryx (*Oryx leucoryx*), scimitar-horned oryx (*Oryx dammah*), and addax (*Addax nasomaculatus*), from the captive herd maintained at their facility, for the purpose of enhancement of the survival of the species. This notification covers activities to be conducted by the applicant over a 5-year period.

Applicant: Hacienda Yturria LLC, Brownsville, TX; PRT–69566A

The applicant requests a captive-bred wildlife registration under 50 CFR 17.21(g) for the scimitar-horned oryx (*Oryx dammah*), to enhance their propagation or survival. This notification covers activities to be conducted by the applicant over a 5-year period.

Applicant: Hacienda Yturria LLC, Brownsville, TX; PRT–69568A

The applicant requests a permit authorizing interstate and foreign commerce, export, and cull of excess scimitar-horned oryx (*Oryx dammah*), from the captive herd maintained at their facility, for the purpose of enhancement of the survival of the species. This notification covers activities to be conducted by the applicant over a 5-year period.

Applicant: Los Senderos Ranch, Nixon, TX; PRT–69142A

The applicant requests a captive-bred wildlife registration under 50 CFR 17.21(g) for the scimitar-horned oryx (*Oryx dammah*), to enhance their propagation or survival. This notification covers activities to be conducted by the applicant over a 5-year period.

Applicant: Los Senderos Ranch, Nixon, TX; PRT–69141A

The applicant requests a permit authorizing interstate and foreign commerce, export, and cull of excess scimitar-horned oryx (*Oryx dammah*), from the captive herd maintained at their facility, for the purpose of enhancement of the survival of the species. This notification covers activities to be conducted by the applicant over a 5-year period.

Applicant: Wilco Ranch, LP, Floresville, TX; PRT–69143A

The applicant requests a captive-bred wildlife registration under 50 CFR 17.21(g) for the scimitar-horned oryx (*Oryx dammah*), to enhance their propagation or survival. This notification covers activities to be conducted by the applicant over a 5-year period.

Applicant: Wilco Ranch, LP, Floresville, TX; PRT–69144A

The applicant requests a permit authorizing interstate and foreign commerce, export, and cull of excess scimitar-horned oryx (*Oryx dammah*), from the captive herd maintained at their facility, for the purpose of enhancement of the survival of the species. This notification covers activities to be conducted by the applicant over a 5-year period.

Applicant: NNNN Operations LLC, San Angelo, TX; PRT–67412A

The applicant requests a captive-bred wildlife registration under 50 CFR 17.21(g) for the scimitar-horned oryx (*Oryx dammah*), to enhance their propagation or survival. This notification covers activities to be conducted by the applicant over a 5-year period.

Applicant: NNNN Operations LLC, San Angelo, TX; PRT–67414A

The applicant requests a permit authorizing interstate and foreign commerce, export, and cull of excess scimitar-horned oryx (*Oryx dammah*), from the captive herd maintained at their facility, for the purpose of enhancement of the survival of the species. This notification covers activities to be conducted by the applicant over a 5-year period.

Applicant: David Howerton, Salem, OR; PRT–66557A

The applicant requests a permit to import a sport-hunted trophy of one male bontebok (*Damaliscus pygargus pygargus*) culled from a captive herd maintained under the management program of the Republic of South Africa, for the purpose of enhancement of the survival of the species.

Applicant: Fallow Creek Ranch, Industry, TX; PRT–66619A

The applicant requests a captive-bred wildlife registration under 50 CFR 17.21(g) for the scimitar-horned oryx (*Oryx dammah*), to enhance their propagation or survival. This notification covers activities to be conducted by the applicant over a 5-year period.

Applicant: Fallow Creek Ranch, Industry, TX; PRT–66618A

The applicant requests a permit authorizing interstate and foreign commerce, export, and cull of excess scimitar-horned oryx (*Oryx dammah*), from the captive herd maintained at their facility, for the purpose of enhancement of the survival of the species. This notification covers activities to be conducted by the applicant over a 5-year period.

Brenda Tapia,

Program Analyst/Data Administrator, Branch of Permits, Division of Management Authority.

[FR Doc. 2012–7668 Filed 3–29–12; 8:45 am]

BILLING CODE 4310–55–P

DEPARTMENT OF THE INTERIOR

Fish and Wildlife Service

[FWS–R9–IA–2012–N076; FXIA16710900000P5–123–FF09A30000]

Endangered Species; Marine Mammals; Issuance of Permits

AGENCY: Fish and Wildlife Service, Interior.

ACTION: Notice of issuance of permits.

SUMMARY: We, the U.S. Fish and Wildlife Service (Service), have issued the following permits to conduct certain activities with endangered species, marine mammals, or both. We issue these permits under the Endangered Species Act (ESA) and Marine Mammal Protection Act (MMPA).

ADDRESSES: Brenda Tapia, Division of Management Authority, U.S. Fish and Wildlife Service, 4401 North Fairfax Drive, Room 212, Arlington, VA 22203; fax (703) 358–2280; or email *DMAFR@fws.gov.*

FOR FURTHER INFORMATION CONTACT: Brenda Tapia, (703) 358–2104 (telephone); (703) 358–2280 (fax); *DMAFR@fws.gov* (email).

SUPPLEMENTARY INFORMATION: On the dates below, as authorized by the provisions of the ESA (16 U.S.C. 1531 *et seq.*), as amended, and/or the MMPA, as amended (16 U.S.C. 1361 *et seq.*), we issued requested permits subject to certain conditions set forth therein. For each permit for an endangered species, we found that (1) The application was filed in good faith, (2) The granted permit would not operate to the disadvantage of the endangered species, and (3) The granted permit would be consistent with the purposes and policy set forth in section 2 of the ESA.

ENDANGERED SPECIES

Permit No.	Applicant	Receipt of application **Federal Register** notice	Permit issuance date
54893A	Joseph Hand	76 FR 65207; October 20, 2011	November 21, 2011.
59085A	Glen Hudson	76 FR 77006; December 9, 2011	January 17, 2012.
59367A	Ronald Bain	76 FR 77006; December 9, 2011	January 17, 2012.
59496A	James Moses	76 FR 77006; December 9, 2011	January 17, 2012.
57362A	Leonard Voyles	76 FR 77006; December 9, 2011	January 18, 2012.
58509A	Paxton Motheral	76 FR 77006; December 9, 2011	January 18, 2012.
60798A	Terrance Wolosek	76 FR 80384; December 23, 2011	January 31, 2012.
30686A	Donald Hotter	77 FR 2314; January 17, 2012	February 27, 2012.
52937A	Carlos Fernandez	76 FR 61733; October 5, 2011	March 7, 2012.
61192A	Jaqueline Seeno	77 FR 6139; February 7, 2012	March 8, 2012.
50819A	Zoological Society of San Diego	76 FR 77006; December 9, 2011	March 12, 2012.
63627A	Paul Monsen	77 FR 6139; February 7, 2012	March 12, 2012.
61274A	Stanley Coman	77 FR 2314; January 17, 2012	March 12, 2012.
57466A	Metro Richmond Zoo	77 FR 3493: January 24, 2012	March 15, 2012.
694126	National Institutes of Health	76 FR 80384; December 23, 2011	March 15, 2012.
65030A	Robin Thigpen	77 FR 6816; February 9, 2012	March 21, 2012.
63679A	Frank Metzger	77 FR 6139; February 7, 2012	March 21, 2012.
59019A	David Marovitz, University of Michigan	76 FR 78308; December 16, 2011	March 21, 2012.
59290A	Theodore Papenfuss, University of California.	76 FR 78308; December 16, 2011	March 21, 2012.
56964A	Jeremy Searle, Cornell University	77 FR 3493; January 24, 2012	March 22, 2012.

MARINE MAMMALS

Permit No.	Applicant	Receipt of application **Federal Register** notice	Permit issuance date
42872A	University of Florida, College of Veterinary Medicine.	76 FR 44352; July 25, 2011	03/19/2012.

Availability of Documents

Documents and other information submitted with these applications are available for review, subject to the requirements of the Privacy Act and Freedom of Information Act, by any party who submits a written request for a copy of such documents to: Division of Management Authority, U.S. Fish and Wildlife Service, 4401 North Fairfax Drive, Room 212, Arlington, VA 22203; fax (703) 358–2280.

Brenda Tapia,

Program Analyst/Data Administrator, Branch of Permits, Division of Management Authority.

[FR Doc. 2012–7669 Filed 3–29–12; 8:45 am]

BILLING CODE 4310–55–P

DEPARTMENT OF THE INTERIOR

Bureau of Indian Affairs

Renewal of Agency Information Collection for the Bureau of Indian Education Information Collection Activities; Request for Comments

AGENCY: Bureau of Indian Affairs, Interior.

ACTION: Notice of request for comments.

SUMMARY: In compliance with the Paperwork Reduction Act of 1995, the Bureau of Indian Affairs (BIA) is submitting to the Office of Management and Budget (OMB) a request for renewal for the collection of information for the Application for Admission to Haskell Indian Nations University and to Southwestern Indian Polytechnic Institute authorized by OMB Control Number 1076–0114, the Student Transportation Form, authorized by OMB Control Number 1076–0134, and the Data Elements for Student Enrollment in Bureau-funded Schools, authorized by OMB Control Number 1076–0122. These information collections expire March 30, 2012.

DATES: Interested persons are invited to submit comments on or before April 30, 2012.

ADDRESSES: You may submit comments on the information collections to the Desk Officer for the Department of the Interior at the Office of Management and

Budget, by facsimile to (202) 395–5806 or you may send an email to: *OIRA_DOCKET@omb.eop.gov.* Please send a copy of your comments to Juanita Keesing, Program Analyst, U.S. Department of the Interior, Bureau of Indian Education, 1849 C Street NW., Washington, DC 20240; email: *Juanita.Keesingt@bie.edu.*

FOR FURTHER INFORMATION CONTACT: Juanita Keesing, Program Analyst, (202) 208–3559. You may review the information collection requests online at *http://www.reginfo.gov.* Follow the instructions to review Department of the Interior collections under review by OMB.

SUPPLEMENTARY INFORMATION:

I. Abstract

These collections help support the educational efforts for American Indian and Alaska Native students from elementary through post-secondary levels.

Application for Admission to Haskell & SIPI

The BIA is requesting renewal of OMB approval for the admission forms for Haskell Indian Nations University and the Southwestern Indian Polytechnic Institute. These admission forms are used in determining program eligibility of American Indian and Alaska Native students for educational services. These forms are utilized pursuant to 25 U.S.C. 2 and 2007(f). Adjustments were made to the total annual cost burden to accurately reflect the cost to submit the applications, in addition to the filing fee per application for Haskell.

Student Transportation Form

The BIA is requesting renewal of OMB approval for the Student Transportation Form. The Student Transportation regulations in 25 CFR part 39, subpart G, contain the program eligibility and criteria that govern the allocation of transportation funds. Information collected from the schools will be used to determine the rate per mile. The information collection provides transportation mileage for Bureau-funded schools, which determines the allocation of transportation funds. The burden hours has decreased from six to two hours due to the implementation of the Web-based system, NASIS, to collect this information, which has reduced the total annual burden hours from 726 to 366 hours. There is an increase in the average number of respondents to this collection from 121 to 183, to accurately reflect the number of respondents.

Data Elements for Student Enrollment in Bureau-Funded Schools

The BIA is requesting renewal of OMB approval for the Student Enrollment Application in Bureau-funded Schools. School registrars collect information on this form to determine the student's eligibility for enrollment in a Bureau-funded school, and if eligible, to identify the student's base and supplemental educational and/or residential program needs. The Bureau of Indian Education compiles the information into a national database to facilitate budget requests and the allocation of congressionally appropriated funds.

II. Request for Comments

The BIA requests your comments on these collections concerning: (a) The necessity of this information collection for the proper performance of the functions of the agency, including whether the information will have practical utility; (b) The accuracy of the agency's estimate of the burden (hours and cost) of the collection of information, including the validity of the methodology and assumptions used; (c) Ways we could enhance the quality, utility, and clarity of the information to be collected; and (d) Ways we could minimize the burden of the collection of the information on the respondents, such as through the use of automated collection techniques or other forms of information technology.

Please note that an agency may not conduct or sponsor, and an individual need not respond to, a collection of information unless it has a valid OMB Control Number.

It is our policy to make all comments available to the public for review at the location listed in the **ADDRESSES** section. Before including your address, phone number, email address or other personally identifiable information, be advised that your entire comment—including your personally identifiable information—may be made public at any time. While you may request that we withhold your personally identifiable information, we cannot guarantee that we will be able to do so.

III. Data

OMB Control Number: 1076–0114.

Title: Application for Admission to Haskell Indian Nations University and to Southwestern Indian Polytechnic Institute.

Brief Description of Collection: Submission of these eligibility applications forms is mandatory in determining a student's eligibility for educational services. The information is collected on one of two forms: Application for Admission to Haskell Indian Nations University form and Application for Admission to Southwestern Indian Polytechnic Institute form.

Type of Review: Extension without change of a currently approved collection.

Respondents: Students.

Number of Respondents: 4,000 per year, on average.

Total Number of Responses: 4,000 per year, on average.

Frequency of Response: Once per year for Haskell; each trimester for SIPI.

Estimated Time per Response: 30 minutes per Haskell application; 30 minutes per SIPI application.

Estimated Total Annual Hour Burden: 2,000 hours.

Estimated Total Annual Cost Burden: $12,240 is the estimated total annual cost burden. We estimate 1,000 Haskell applications at $10 filing fee per application. There is no fee to apply to SIPI. The costs for postage and envelopes to submit an application are included for Haskell and SIPI.

* * * * *

OMB Control Number: 1076–0134.

Title: Student Transportation Form.

Brief Description of Collection: This annual collection provides pertinent data concerning the school's bus transportation mileage and related long distance travel mileage to determine funding levels for school transportation. This information is collected on the Indian School Equalization Program (ISEP) Student Transportation form.

Type of Review: Extension without change of a currently approved collection.

Respondents: Contract and Grant schools; Bureau-operated schools.

Number of Respondents: 183 per year, on average.

Total Number of Responses: 183 per year, on average.

Frequency of Response: Once per year.

Estimated Time per Response: 2 hours.

Estimated Total Annual Burden: 366 hours.

* * * * *

OMB Control Number: 1076–0122.

Title: Data Elements for Student Enrollment in Bureau-funded Schools.

Brief Description of Collection: This annual collection provides Bureau-funded schools with data about students to determine placement, special needs assessment, and funding for individuals and assists schools in developing a plan for the school year. The information is collected on a Student Enrollment Application form.

Type of Review: Extension without change of a currently approved collection.

Respondents: Contract and Grant schools; Bureau-operated schools.

Number of Respondents: 48,000 per year, on average.

Total Number of Responses: 48,000 per year, on average.

Frequency of Response: Once per year.

Estimated Time per Response: 15 minutes.

Estimated Total Annual Burden: 12,000 total burden hours.

Dated: March 26, 2012.

Alvin Foster,

Assistant Director for Information Resources.

[FR Doc. 2012–7683 Filed 3–29–12; 8:45 am]

BILLING CODE 4310–6W–P

DEPARTMENT OF THE INTERIOR

Bureau of Indian Affairs

Renewal of Agency Information Collection for Reindeer in Alaska

AGENCY: Bureau of Indian Affairs, Interior.

ACTION: Notice of submission to OMB.

SUMMARY: In compliance with the Paperwork Reduction Act of 1995, the Bureau of Indian Affairs (BIA) is submitting to the Office of Management and Budget (OMB) a request for renewal for the collection of information for Reindeer in Alaska. The information collection is currently authorized by OMB Control Number 1076–0047, which expires March 30, 2012.

DATES: Interested persons are invited to submit comments on or before *April 30, 2012*.

ADDRESSES: You may submit comments on the information collection to the Desk Officer for the Department of the Interior at the Office of Management and Budget, by facsimile to (202) 395–5806 or you may send an email to: *OIRA_DOCKET@omb.eop.gov*. Please send a copy of your comments to Keith Kahklen, Natural Resources Manager, Bureau of Indian Affairs, P.O. Box 25520 [3rd Floor Federal Building], Juneau, Alaska 99802–5520; email: *Keith.Kahklen@bia.gov;* facsimile (907) 586–7120.

FOR FURTHER INFORMATION CONTACT: Keith Kahklen, (907) 586–7618. You may review the ICR online at *http://www.reginfo.gov*. Follow the instructions to review Department of the Interior collections under review by OMB.

SUPPLEMENTARY INFORMATION:

I. Abstract

The Bureau of Indian Affairs (BIA) is seeking renewal of the approval for the information collection conducted under 25 CFR part 243, Reindeer in Alaska, which is used to monitor and regulate the possession and use of Alaskan reindeer by non-Natives in Alaska. The information to be provided includes an applicant's name and address, and where an applicant will keep reindeer. The applicant must fill out an application for a permit to get a reindeer for any purpose, and is required to report on the status of reindeer annually or when a change occurs, including changes prior to the date of the annual report. Comments were received in response to the **Federal Register** notice (76 FR 71600) which did not address the information collection; therefore, we have not changed the collection. This renewal does include changes to the burden hours, reducing the number of respondents from 21 to 18. In addition, we have changed the number of forms associated with this collection from two to four to accurately reflect the forms being used to collect this information.

II. Request for Comments

The BIA requests that you send your comments on this collection to the location listed in the **ADDRESSES** section. Your comments should address: (a) The necessity of the information collection for the proper performance of the agencies, including whether the information will have practical utility; (b) the accuracy of our estimate of the burden (hours and cost) of the collection of information, including the validity of the methodology and assumptions used; (c) ways we could enhance the quality, utility and clarity of the information to be collected; and (d) ways we could minimize the burden of the collection of the information on the respondents, such as through the use of automated collection techniques or other forms of information technology.

Please note that an agency may not sponsor or conduct, and an individual need not respond to, a collection of information unless it has a valid OMB Control Number. Approval for this collection expires March 30, 2012. Response to the information collection is required to obtain a benefit.

It is our policy to make all comments available to the public for review at the location listed in the **ADDRESSES** section during the hours of 9 a.m.–5 p.m., Eastern Time, Monday through Friday except for legal holidays. Before including your address, phone number, email address or other personally identifiable information, be advised that your entire comment—including your personally identifiable information—may be made public at any time. While you may request that we withhold your personally identifiable information, we cannot guarantee that we will be able to do so.

III. Data

OMB Control Number: 1076–0047.

Title: Reindeer in Alaska, 25 CFR part 243.

Brief Description of Collection: There are four forms associated with this information collection, Sale Permit for Alaska Reindeer, Sale Report for Alaska Reindeer, Special Use Permit for Alaska Reindeer, and Special Use Reindeer Report, which require information to be provided to obtain or retain a benefit, namely, a permit to obtain a reindeer.

Type of Review: Extension.

Respondents: Non-Natives who wish to possess Alaskan reindeer.

Total Number of Respondents: 18 per year, on average (8 respondents for the Sale Permit for Alaska Reindeer, 8 respondents for the Sale Report Form for Alaska Reindeer, 1 respondent for the Special Use Permit for Alaska Reindeer, and 1 respondent for the Special Use Reindeer Report).

Frequency of Collection: Once a year.

Estimated Time per Response: 5 minutes for the Sale Permit and Report forms and 10 minutes for the Special Use Permit and Report forms, on average.

Estimated Total Annual Burden Hours: 2 hours.

Estimated Total Annual Non-hour Burden: $10.00.

Dated: March 26, 2012.

Alvin Foster,

Assistant Director for Information Resources.

[FR Doc. 2012–7680 Filed 3–29–12; 8:45 am]

BILLING CODE 4310–4J–P

DEPARTMENT OF THE INTERIOR

Bureau of Indian Affairs

Final Determination Against Federal Acknowledgment of the Central Band of Cherokee

AGENCY: Bureau of Indian Affairs, Interior.

ACTION: Notice of final determination.

SUMMARY: Notice is hereby given that the Department of the Interior (Department) declines to acknowledge that the petitioner known as the ''Central Band of Cherokee'' (formerly known as the ''Cherokees of Lawrence County, Tennessee''), Petitioner #227, is an Indian tribe within the meaning of

Federal law. This notice is based on a determination that the petitioner does not meet one of the seven mandatory criteria for a government-to-government relationship with the United States. The Office of Federal Acknowledgment (OFA) produced a Summary under the Criterion as the basis for this final determination (FD).

DATES: This determination is final and will become effective on June 28, 2012, unless a request for reconsideration is filed with the Interior Board of Indian Appeals.

ADDRESSES: Requests for a copy of the FD should be addressed to the Office of the Assistant Secretary—Indian Affairs, Attention: Office of Federal Acknowledgment, 1951 Constitution Avenue NW., MS: 34B–SIB, Washington, DC 20240. The FD and **Federal Register** notice are also available at the OFA section of the Indian Affairs Web site at *www.bia.gov.*

FOR FURTHER INFORMATION CONTACT: Alycon T. Pierce, Acting Director, Office of Federal Acknowledgment, (202) 513–7650.

SUPPLEMENTARY INFORMATION: The Department declines to acknowledge ''Central Band of Cherokee'' (CBC), Petitioner #227, c/o Mr. Johnny L. Corbin, P.O. Box 331, Lawrenceburg, Tennessee 38464, as an Indian tribe within the meaning of Federal law. This notice is based on a determination that the petitioner does not meet one of the seven mandatory criteria set forth in 25 CFR 83.7, specifically criterion 83.7(e).

The Department issued a proposed finding (PF) on August 6, 2010, proposing to deny acknowledgment of the petitioner under one criterion as permitted by § 83.10(e)(1). The PF found the CBC petitioner was not an Indian tribe within the meaning of Federal law because the petitioner did not meet criterion 83.7(e). This criterion requires that the petitioner's membership consists of individuals who descend from a historical Indian tribe or from historical Indian tribes that combined and functioned as a single autonomous political entity. The review of the evidence for the PF clearly established that the petitioner did not meet criterion 83.7(e) because none of the 407 members demonstrated descent from a historical Indian tribe.

The Department published a notice of the PF in the **Federal Register** on August 18, 2010 (75 FR 51105). Publishing the notice initiated a 180-day comment period during which time the petitioner, interested and informed parties, and the general public could submit arguments and evidence to support or rebut the PF. In response to the PF, the petitioner or third parties needed to provide evidence for the FD that the petitioner meets the criterion in question under the reasonable likelihood standard in § 83.6(d). The CBC's comment period ended on February 14, 2011. The Assistant Secretary—Indian Affairs (AS–IA) found good cause to reopen the comment period and extend it for an additional 180 days to August 15, 2011. The period for the petitioner to respond to third party comments ended on January 7, 2012.

On January 4, 2012, the petitioner requested to withdraw from the acknowledgment process. The regulations provide that once active consideration of the documented petition has begun, the AS–IA shall continue the review and publish proposed findings and a final determination, notwithstanding any request to cease consideration (§ 83.10(g)). The CBC petitioner went on active consideration on August 6, 2010, when the AS–IA issued the PF. Therefore, the OFA notified Petitioner #227 and interested and informed parties that the Department would begin work on a FD on January 23, 2012.

In order to meet criterion 83.7(e), a petitioner must demonstrate that its current members descend from a historical Indian tribe or historical Indian tribes that combined and functioned as an autonomous political entity. Thus, the petitioner must: (1) Identify its current members; (2) document the historical Indian tribe and the individuals in that historical Indian tribe from whom the petitioner's current members descend; and (3) document, generation-to-generation, the members' descent from the historical Indian tribe.

The membership list used for the FD is the November 20, 2007, list that was separately certified by the group's governing body and used for the PF. It identified 407 members of the group by full name, birth date, and residential address. Having no other certified membership list, the Department continued to use the 2007 list for the FD.

The petitioner claims its members are descendants of Cherokee Indians who allegedly remained in Tennessee after 1806 when the historical Indian tribe ceded its lands by treaty, or from Indians who returned to ''their traditional lands'' in the area of Lawrence County, Tennessee, after evading or escaping from the Cherokee removal in the late 1830s. There is no primary or reliable secondary evidence to validate these claims.

The Department identified the Cherokee Indian rolls taken in the 1800s and early 1900s that would most likely include the petitioner's ancestors if they were members of the historical Cherokee tribe at that time. However, the Department's researchers did not find, and the CBC petitioner and third party commenters did not provide evidence, that any of the petitioner's members or ancestors were on any of these historical rolls.

The petitioner's comments on the PF included a request that OFA review its members' genealogies, but did not provide any new evidence for the FD that addresses criterion 83.7(e).

The majority of the third party comments were submitted by the group's former leader, Joe H. White. His submissions verified some facts about his own family. However, none of his submissions demonstrated his ancestors were Cherokee Indians or members of a historical Indian tribe. He and the other third party commenter submitted undocumented descent reports on family lines that were not named in the records for the PF. There is no evidence that any of the individuals newly identified in these reports are members of the CBC, or that the historical figures named in the reports are ancestors of CBC members.

Genealogical charts or descent reports for about 53 percent (219 of 407) of the CBC members illustrate their claimed descent from historical individuals but their descent is not documented. This submission does not satisfy the requirements of criterion 83.7(e) for two reasons: (1) The petitioner has not demonstrated the generation-to-generation links between these members and their claimed ancestors; and (2) the claimed ancestors have not been demonstrated to be members or descendants of a historical Indian tribe. Even if these 219 individuals had documented their claimed descent from a historical Indian tribe, such a low percent of descent (53 percent) would not satisfy the requirements of criterion 83.7(e). No petitioner for Federal acknowledgment has satisfied the requirements of the criterion with less than 80 percent of its members demonstrating descent from the historical Indian tribe.

The petitioner's other comments on the PF were a letter and two exhibits that it characterized as ''recognition'' by the Federal government and the State of Tennessee. The first exhibit was a 2009 Federal District Court ruling that granted the CBC corporation use of a trademark ''for purposes at its museum, only in the state of Tennessee.'' The second exhibit was a June 2010 certificate of recognition from the Tennessee Commission of Indian

Affairs, which the PF had found did not provide evidence of Indian descent. These two exhibits did not provide evidence applicable to criterion 83.7(e).

Both of the third parties submitted articles on general Cherokee Indian history, DNA as evidence, and other non-responsive issues. These submissions were either the same as or similar to the documents analyzed for the PF and did not provide evidence for criterion 83.7(e).

In summary, Petitioner #227 has not provided evidence to demonstrate that its ancestors who were named in the PF, or others identified in records submitted for the FD, were members of a band of Cherokee Indians in Lawrence County. The records do not demonstrate that the petitioner's ancestors were members or descendants of an Indian tribe in any of the localities where those individuals originated prior to settling in Tennessee. The evidence for the FD, whether submitted by the petitioner or third parties, or gathered by the OFA in its verification process, does not document the current members' generation-to-generation descent from their claimed ancestors. The evidence shows that the group known as the ''Central Band of Cherokee'' is a recently formed group of individuals who claim to have Indian ancestry from a historical Indian tribe, but who have not documented those claims. None of the 407 members of the group has demonstrated descent from a historical Indian tribe or historical Indian tribes that combined and functioned as an autonomous political entity.

The Department declines to acknowledge the group known as the ''Central Band of Cherokee,'' Petitioner #227, as an Indian tribe because the evidence in the record does not demonstrate that the petitioner's members descend from a historical Indian tribe as required by mandatory criterion 83.7(e). The Department bases this FD on an evaluation of materials the petitioner and third parties submitted in response to the PF, and materials already in the record for the PF. This FD also incorporates evidence the Department researchers developed during the verification process. Therefore, this FD should be read and considered in conjunction with the PF.

A copy of the FD that includes the summary evaluation under the criteria and provides the evidence, reasoning, and analyses for the FD will be provided to the petitioner and interested parties, and is available to other parties upon written request. It will be posted on the Bureau of Indian Affairs Web site at: *http://www.bia.gov/WhoWeAre/AS-IA/OFA/RecentCases/index.htm.* Requests for a copy of the FD should be addressed to the office listed in the **ADDRESSES** section of this notice.

After the publication of this notice of the FD in the **Federal Register**, the petitioner or any interested party may file a request for reconsideration with the Interior Board of Indian Appeals (IBIA) under the procedures in § 83.11 of the regulations. The IBIA must receive this request no later than 90 days after the publication of the FD in the **Federal Register**. The FD will become final and effective 90 days from the **Federal Register** publication, unless a request for reconsideration is received within that time.

Dated: March 23, 2012.

Larry Echo Hawk,

Assistant Secretary—Indian Affairs.

[FR Doc. 2012–7646 Filed 3–29–12; 8:45 am]

BILLING CODE 4310–G1–P

DEPARTMENT OF THE INTERIOR

Bureau of Land Management

[LLNVS01000 L58530000 EU0000; 11–08807; MO# 4500022239; TAS: 14X5232]

Notice of Availability of the Final Supplemental Environmental Impact Statement and Record of Decision for the Upper Las Vegas Wash Conservation Transfer Area, Las Vegas, NV

AGENCY: Bureau of Land Management, Interior.

ACTION: Notice of Availability.

SUMMARY: In accordance with the National Environmental Policy Act of 1969 (NEPA), as amended, and the Federal Land Policy and Management Act of 1976, as amended, the Bureau of Land Management (BLM) has prepared a Final Supplemental Environmental Impact Statement (EIS) and a Record of Decision (ROD) for the Upper Las Vegas Wash Conservation Transfer Area, Las Vegas, Nevada, and by this notice is announcing their availability.

DATES: The final decision on the Upper Las Vegas Wash Conservation Transfer Area will not become effective for a minimum of 30 days after the Environmental Protection Agency publishes its notice of availability in the **Federal Register**.

ADDRESSES: Printed copies or a compact disc of the Final Supplemental EIS are available on request from the BLM Las Vegas Field Office, 4701 N. Torrey Pines Drive, Las Vegas, Nevada 89130, phone 702–515–5000, or email to: *NV_SNDO_Planning@blm.gov.* Interested persons may also review the Final Supplemental EIS at the following Web site: *http://www.blm.gov/nv/st/en/fo/lvfo.html.*

Copies of the Final Supplemental EIS and ROD are available for public inspection at the following locations in Nevada:

- BLM Nevada State Office, 1340 Financial Blvd., Reno
- BLM Southern Nevada District Office, 4701 North Torrey Pines Drive, Las Vegas

FOR FURTHER INFORMATION CONTACT: Bob Ross, telephone 702–515–5199; address Las Vegas Field Office, 4701 N. Torrey Pines Drive, Las Vegas, NV 89130; or email *Bob_Ross@blm.gov.* Persons who use a telecommunications device for the deaf (TDD) may call the Federal Information Relay Service (FIRS) at 1–800–877–8339 to contact the above individual during normal business hours. The FIRS is available 24 hours a day, 7 days a week, to leave a message or question with the above individual. You will receive a reply during normal business hours.

SUPPLEMENTARY INFORMATION: The Final Supplemental EIS describes and analyzes boundary adjustments to the Upper Las Vegas Wash Conservation Transfer Area (CTA). The CTA study area is located in the northern portion of the Las Vegas Valley. In 1998, the Southern Nevada Public Land Management Act (SNPLMA) authorized the BLM to dispose of Federal land in Clark County, Nevada. In 2002, the Clark County Conservation of Public Land and Natural Resources Act amended the SNPLMA to expand the disposal boundary area and added approximately 22,000 acres of land available for disposal. The BLM analyzed the impacts of all lands eligible for disposal in the Las Vegas Valley in the 2004 Las Vegas Disposal Boundary Final EIS and ROD. The Las Vegas Disposal Boundary Final EIS identified a 5,000 acre general area as the CTA and stipulated additional study be conducted to determine a final CTA boundary. Subsequently, due to extensive public input, an additional 8,000 acres were added to the 5,000-acre CTA study area. This Final Supplemental EIS is the culmination of the boundary study. The BLM prepared a Supplemental EIS because of the significance of paleontological, botanical, hydrological, and cultural resources present within the CTA study area and the need for additional public input. The Final Supplemental EIS/ROD selects the Preferred Alternative B as the final boundary for the CTA, which will ensure protection of sensitive resources, including fossils, cultural resources, the

natural functioning of the wash, and endemic plants on public lands within the CTA study area. The Final Supplemental EIS analyzed five action alternatives ranging from approximately 13,000 acres to less than 1,500 acres and the no action alternative.

- Alternative A: 12,953 acres, includes the fossil formation, sensitive cultural and plant resources, active wash, the adjacent alluvial fan, and a 1-mile resource-protection zone around the northern and eastern boundaries of the Las Vegas Paiute reservation.
- Alternative B: 10,670 acres, includes culturally significant lands, the fossil formation, sensitive plant resources, the active wash, open space adjacent to the Las Vegas Paiute reservation, and the adjacent alluvial fan as unavailable for disposal and development. Alternative B includes 2,653 acres within the 13,000-acre study area available for development. Alternative B was originally proposed as 11,008 acres and was revised from the Draft Supplemental EIS.
- Alternative C: 6,362 acres, includes the fossil formation, sensitive cultural and plant resources, active wash, and a portion of the adjacent alluvial fan.
- Alternative D: 5,301 acres, includes most of the fossil formation, the sensitive cultural and rare plant resources, and the active wash.
- Alternative E: 3,314 acres, includes some of the fossil formation, the sensitive cultural and rare plant resources, and part of the active wash.
- No Action Alternative: 1,448 acres, includes the Tule Spring cultural site and the 300-acre Eglington Preserve.

On January 22, 2010, the Environmental Protection Agency published the Notice of Availability for the Draft Supplemental EIS for this project in the **Federal Register** [75 FR 3730]. The BLM held three public meetings and accepted written comments during a 60-day comment period, which was extended an additional 60 days. A total of 1,914 responses from individuals and 13 comments from governmental entities were received. The comments pertained to a variety of broad categories, including alternatives, boundaries, management, and physical/natural resources. The Final Supplemental EIS addresses the following issues identified during the comment period: the NEPA process (consultation/coordination, proposal description, alternatives, and connected actions/cumulative impacts); social resources (cultural, visual, noise, land use, recreation, transportation, and socioeconomic); and physical/natural resources (botanical, water, paleontological, and earth).

Comments on the Draft Supplemental EIS received from the public and internal BLM review were considered and incorporated as appropriate into the Final Supplemental EIS. Public comments resulted in the addition of clarifying text, but did not significantly change the proposed decision.

Filing an Appeal:

The decision by BLM to select the revised Alternative B boundary as the agency's Preferred Alternative is appealable subject to 43 CFR part 4, subpart E—Special Rules Applicable to Public Land Hearings and Appeals, and 43 CFR 2801.10. Any party adversely affected by this decision may appeal within the 30 day timeframe by filing an appeal with the BLM Las Vegas Field Manager, 4701 N. Torrey Pines Drive, Las Vegas, Nevada 89130, or fax: 702–515–5023. A copy of the notice of appeal, and statement of reasons and all pertinent documents must be served on each adverse party named in the decision from which the appeal is taken and on the Office of the Regional Solicitor, U.S. Department of the Interior, Pacific Southwest Region, 2800 Cottage Way, Room E–1712, Sacramento, California 95826, no later than 15 days after filing documents with the Las Vegas Field Manager.

To file a petition for stay of the ROD pursuant to 43 CFR 4.21 while an appeal is pending before the Interior Board of Land Appeals (IBLA), the petition for stay must accompany the Notice of Appeal (43 CFR 4.21 or 43 CFR 2801.10). A petition for stay must show sufficient justification based on the standards listed in 43 CFR 4.21(b). If a petition for stay is submitted with the notice of appeal, a copy of the notice of appeal and petition for stay must be served on the IBLA at the same time it is filed with the Las Vegas Field Manager. Persons interested in filing an appeal are encouraged to consult the cited Federal regulations for additional appeal requirements.

Authority: 40 CFR 1506.6 and 1506.10.

Robert B. Ross, Jr.,

Las Vegas Field Manager.

[FR Doc. 2012–7546 Filed 3–29–12; 8:45 am]

BILLING CODE 4310–HC–P

DEPARTMENT OF THE INTERIOR

Bureau of Land Management

[LLAK930000 L16100000.DS0000.12XL]

Notice of Availability of the Draft Integrated Activity Plan/Environmental Impact Statement for the National Petroleum Reserve—Alaska and Announcement of Public Subsistence-Related Hearings

AGENCY: Bureau of Land Management, Interior.

ACTION: Notice.

SUMMARY: In accordance with the National Environmental Policy Act of 1969, as amended, the Naval Petroleum Reserves Production Act of 1976, as amended, and the Federal Land Policy and Management Act of 1976, as amended, the Bureau of Land Management (BLM) has prepared the National Petroleum Reserve—Alaska (NPR–A) Draft Integrated Activity Plan/Environmental Impact Statement (IAP/EIS) and by this notice is announcing the opening of the comment period. The BLM is also announcing that it will hold public meetings on the Draft IAP/EIS and subsistence resource hearings to receive comments on the Draft IAP/EIS and its potential to impact subsistence resources and activities.

DATES: To ensure that comments will be considered, the BLM must receive written comments on the Draft IAP/EIS on or before May 29, 2012, following the date the Environmental Protection Agency publishes its notice of the Draft IAP/EIS in the **Federal Register**. Public meetings on the Draft IAP/EIS will be held in the following communities in Alaska: Anaktuvuk Pass, Anchorage, Atqasuk, Barrow, Fairbanks, Nuiqsut, Point Lay, and Wainwright. Public hearings on subsistence resources and activities will occur in conjunction with the public meetings for the Draft IAP/EIS in the potentially affected communities of Anaktuvuk Pass, Atqasuk, Barrow, Nuiqsut, Point Lay, and Wainwright. The dates, times, and locations of the meetings and hearings will be announced through public notices, media news releases, and/or other mailings at least 15 days in advance.

ADDRESSES: You may submit comments related to the Draft IAP/EIS for the National Petroleum Reserve-Alaska by any of the following methods:

- *Web site: http://www.blm.gov/ak/st/en.html.*
- *Fax:* 866–611–9420 (toll Free) or 907–268–4224.
- *Mail:* NPR–A IAP/EIS Comments, AECOM Project Office, 1835 South

Bragaw Street, Suite 490, Anchorage, AK 99508.

• *Hand delivery:* AECOM, 1835 South Bragaw Street, Suite 490, Anchorage, AK, or to the BLM Public Information Center in the Federal Building, 222 W. 7th Avenue, Anchorage, AK.

Copies of the Draft IAP/EIS are available for review at the BLM's Alaska Web site at *http://www.blm.gov/ak/st/en.html.* A CD or paper copy may be requested by calling Jim Ducker, BLM project lead, at 907–271–3130.

FOR FURTHER INFORMATION CONTACT: Jim Ducker, BLM Alaska State Office, 907–271–3130. Persons who use a telecommunications device for the deaf (TDD) may call the Federal Information Relay Service (FIRS) at 1–800–877–8339 to contact the above individual during normal business hours. The FIRS is available 24 hours a day, 7 days a week, to leave a message or question with the above individual. You will receive a reply during normal business hours.

SUPPLEMENTARY INFORMATION: Please note that public comments and information submitted, including names, street addresses, and email addresses of persons who submit comments, will be available for public review and disclosure at the above address during regular business hours (8 a.m. to 4 p.m.) Monday through Friday except holidays.

Before including your address, phone number, email address, or other personal identifying information in your comment, you should be aware that your entire comment—including your personal identifying information—may be made publicly available at any time. While you can ask us in your comment to withhold your personal identifying information from public review, we cannot guarantee that we will be able to do so.

This IAP/EIS will result in a Record of Decision (ROD) that will supersede the RODs for two previous plans for portions of the NPR–A: The Northwest NPR–A IAP ROD signed January 22, 2004 and the Northeast NPR–A Supplemental IAP ROD signed July 16, 2008 and may amend the Colville River Special Area Management Plan signed July 18, 2008. This Draft IAP/EIS offers four alternatives for future management of the NPR–A. There is no Preferred Alternative.

Decisions to be made as part of the plan include, but are not limited to, lands that would be made available for oil and gas leasing, restrictions on oil and gas activities and other BLM-authorized land uses, expansion of the number and size of Special Areas, and recommendations for inclusion of rivers in the national Wild and Scenic Rivers System. None of the alternatives would preclude development of infrastructure across NPR–A in support of Chukchi Sea oil and gas development.

Alternative A is the No Action Alternative and represents the decisions made in the existing Northeast NPR–A and Northwest NPR–A plans. Those two plans do not address more than 9 million acres in the southwestern part of the NPR–A.

Alternatives B through D would make decisions for the entire NPR–A.

Alternative B would make 48 percent of the NPR–A available for oil and gas leasing, add more than 7 million acres of Special Areas, and recommend 12 rivers for Wild and Scenic River designation.

Alternative C would make 76 percent of the Reserve available for oil and gas leasing, add approximately 700,000 acres of Special Areas, and recommend three rivers for Wild and Scenic River designation.

Alternative D would make all of the NPR–A available for oil and gas leasing and would not expand Special Areas or recommend any Wild and Scenic River designation.

The public is encouraged to comment on any of these alternatives. The BLM asks that those submitting comments make them as specific as possible with reference to chapters, page numbers, and paragraphs in the Draft EIS document. Comments that contain only opinions or preferences will not receive a formal response; however, they will be considered and included as part of the BLM decision-making process. The most useful comments will contain new technical or scientific information, identify data gaps in the impact analysis, or will provide technical or scientific rationale for opinions or preferences.

Section 810 of the Alaska National Interest Lands Conservation Act requires the BLM to evaluate the effects of the alternatives presented in this Draft IAP/EIS on subsistence activities, and to hold public hearings if it finds that any alternative may significantly restrict subsistence activities. The analysis of environmental consequences indicates that actions anticipated to be taken under Alternative D and the cumulative impacts associated with actions anticipated under all alternatives may significantly restrict subsistence activities.

Therefore, the BLM will hold public hearings on subsistence in conjunction with the public meetings on the Draft IAP/EIS in the potentially affected communities of Anaktuvuk Pass, Atqasuk, Barrow, Nuiqsut, Point Lay, and Wainwright.

Ronald L. Dunton,

Acting State Director.

[FR Doc. 2012–7547 Filed 3–29–12; 8:45 am]

BILLING CODE 4310–JA–P

DEPARTMENT OF THE INTERIOR

Bureau of Land Management

[LLCON00000 L10200000.DF0000 LXSS080C0000]

Notice of Public Meeting, Northwest Colorado Resource Advisory Council Meeting

AGENCY: Bureau of Land Management, Interior.

ACTION: Notice of Public Meeting

SUMMARY: In accordance with the Federal Land Policy and Management Act (FLPMA) and the Federal Advisory Committee Act of 1972 (FACA), the U.S. Department of the Interior, Bureau of Land Management (BLM) Northwest Colorado Resource Advisory Council (RAC) will meet as indicated below.

DATES: The Northwest Colorado RAC scheduled its remaining 2012 meetings for May 10, August 23 and November 29. Each meeting will begin at 8 a.m. and adjourn at approximately 3 p.m., with public comment periods regarding matters on the agenda at 10 a.m. and 2 p.m. Agendas will be available before the meeting at *www.blm.gov/co/st/en/BLM_Resources/racs/nwrac.html.*

ADDRESSES: The May 10 meeting will be held in Silt, Colorado, at the BLM Colorado River Valley Field Office, 2300 River Frontage Road. The August 23 meeting will be in Meeker, Colorado, at the Fairfield Center, 200 Main St. The November 29 meeting will be in Grand Junction, Colorado, at the Hampton Inn, 205 Main St.

FOR FURTHER INFORMATION CONTACT: David Boyd, Public Affairs Specialist, Colorado River Valley Field Office, 2300 River Frontage Road, Silt, CO; (970) 876–9008. Persons who use a telecommunications device for the deaf (TDD) may call the Federal Information Relay Service (FIRS) at 1–800–877–8339 to contact the above individual during normal business hours. The FIRS is available 24 hours a day, 7 days a week, to leave a message or question with the above individual. You will receive a reply during normal business hours.

SUPPLEMENTARY INFORMATION: The Northwest Colorado RAC advises the Secretary of the Interior, through the BLM, on a variety of public land issues in northwestern Colorado.

Topics of discussion during Northwest Colorado RAC meetings may include the BLM National Greater Sage-Grouse Conservation Strategy, working group reports, recreation, fire management, land-use planning, invasive species management, energy and minerals management, travel management, wilderness, wild horse herd management, land exchange proposals, cultural resource management and other issues as appropriate. These meetings are open to the public. The public may present written comments to the RACs. Each formal RAC meeting will also have time, as identified above, allocated for hearing public comments. Depending on the number of persons wishing to comment and time available, the time for individual oral comments may be limited.

Subcommittees under this RAC meet regarding the McInnis Canyon National Conservation Area; Resource Management Plan revisions for the Colorado River Valley, Kremmling and Grand Junction field offices; and the White River Field Office Resource Management Plan Oil and Gas Amendment. Subcommittees report to the Northwest Colorado RAC at each council meeting. Subcommittee meetings are open to the public.

More information is available at *www.blm.gov/co/st/en/BLM_Resources/racs/nwrac.html.*

Dated: March 23, 2012.

Helen M. Hankins,

State Director.

[FR Doc. 2012–7687 Filed 3–29–12; 8:45 am]

BILLING CODE 4310–JB–P

DEPARTMENT OF THE INTERIOR

National Park Service

[NPS–NCRO–HAFE–0811–7947; 3851–SZM]

Notice of a Record of Decision, Harpers Ferry National Historical Park

AGENCY: National Park Service, Interior.

ACTION: Notice of a Record of Decision on the Final Environmental Impact Statement for the General Management Plan, Harpers Ferry National Historical Park.

SUMMARY: Pursuant to the National Environmental Policy Act of 1969 (NEPA), 42 U.S.C. 4332(2)(C), the National Park Service (NPS) announces the availability of the Record of Decision for the General Management Plan, Harpers Ferry National Historical Park, West Virginia, Virginia, and Maryland. As soon as practicable, the NPS will begin to implement the preferred alternative as contained in the Final Environmental Impact Statement issued by the NPS on August 27, 2010, and summarized in the Record of Decision. Copies of the Record of Decision may be obtained from the contact listed below or online at *www.nps.gov/hafe.*

FOR FURTHER INFORMATION CONTACT: David Hayes, Regional Planner and Transportation Liaison, National Capital Region, National Park Service, at 1100 Ohio Drive SW., Washington, DC 20242, by telephone at (202) 619–7277, or email at *david_hayes@nps.gov.*

SUPPLEMENTARY INFORMATION: The following course of action will occur under the selected alternative. The visitor contact station on Cavalier Heights will be improved to provide better orientation for park visitors and information on the park's many resources. It will be the starting point for an expanded transportation system that will allow visitors to reach areas of the park such as the Murphy Farm, Schoolhouse Ridge, and Camp Hill which were previously difficult to access without a car. It will also be a stop on the new Around-the-Park trail that will allow visitors to hike to all areas of the park. The Record of Decision includes a statement of the decision made, synopses of other alternatives considered, the basis for the decision, a description of the environmentally preferable alternative, a listing of measures to minimize environmental harm, and an overview of public involvement in the decision-making process.

Preserved historic buildings, period shops, exhibits, and outdoor furnishings will complement the interpretation provided by rangers and possible period artisans/demonstrators that will revitalize this area. Travelling exhibits will be sought to supplement interpretation provided within the park. A smaller information center and bookstore will remain but possibly be moved to new locations. Park artifact/museum object storage will be removed from the historic structures and the space converted to office use or other types of storage.

The Federal Armory will retain its current access. A study of the feasibility of returning John Brown's Fort to its original location will be undertaken. The train station will become a secondary portal to the site with proposed excursion trains arriving from Washington several days of the week. The armory canal will be restored and rewatered with the turbine also restored for interpretive purposes. The power plant will be rehabilitated for exhibits.

Virginius and Halls Islands will be preserved as an archeological preserve with ruins stabilized and outlined and wayside exhibits explaining the history and industrial development that was there.

Camp Hill will be managed with a campus atmosphere reminiscent of the Storer College era. Additional signs and waysides will allow visitors to get the feel of the site. Museum exhibits now in Lower Town will be moved to one or more of the Storer College structures to better explain the importance of Harpers Ferry to the story of the civil rights movement in America. Several historic buildings from the military occupation of Camp Hill will be restored and adaptively used for park headquarters. The historic Shipley School on Camp Hill is currently in poor condition. Further consideration will be required to determine potential future use.

The historic Grandview School will be rehabilitated and enlarged for use by the park's protection division. The Nash Farm will be preserved as a dairy farm of the 1940s with its structures adapted for use as an environmental education center and outdoor laboratory managed by the NPS or an NPS Partner. At the Murphy Farm, the Civil War earthworks and the foundations of John Brown's Fort will be stabilized, and the Chambers/Murphy house studied to determine the best use for it. A bus stop and trail to the earthworks and foundations will be developed. Restrooms and drinking water will also be developed at the site.

Schoolhouse Ridge will also be managed as a battlefield landscape with agricultural leases that maintain the 1862 appearance. The nonhistoric campground will be removed and the Harpers Ferry Caverns restored to a more natural appearance. Nonhistoric structures will be removed. Onsite interpretation and occasional interpretive demonstrations with a military focus will be provided. Bus parking and trails will be developed.

At the Potoma Wayside, upgraded takeout facilities will be developed to facilitate river use. The takeout will be hardened and restroom facilities provided. To the extent possible, parking will also be upgraded. Interpretation will be provided by the concessioner.

On Loudoun Heights, the Sherwood House will be removed and the site developed as a Civil War overlook. All Civil War camps and earthworks will be stabilized as necessary.

The majority of the site will be maintained for its natural resources. Short Hill will be managed similarly.

Maryland Heights will undergo stabilization of earthworks and fortifications as necessary and restoration of line of fire vistas. Historic roads will continue to be used and maintained. A more comprehensive level of interpretation will be achieved through wayside exhibits, site brochures and occasional ranger-guided hikes. Three additional alternatives were analyzed in the Draft and Final Environmental Impact Statements. The full range of foreseeable environmental consequences was assessed, and appropriate mitigating measures were identified.

The Regional Director, National Capital Region, approved the Record of Decision for the project. The official primarily responsible for implementing the General Management Plan is the Superintendent of Harpers Ferry National Historical Park.

Dated: July 22, 2011.

Stephen E. Whitesell,

Regional Director, National Capital Region.

[FR Doc. 2012–7744 Filed 3–29–12; 8:45 am]

BILLING CODE 4312–JT–P

DEPARTMENT OF THE INTERIOR

Bureau of Ocean Energy Management

Geological and Geophysical Exploration on the Atlantic Outer Continental Shelf (OCS)

AGENCY: Bureau of Ocean Energy Management (BOEM), Interior.

ACTION: Notice of Availability of a Draft Programmatic Environmental Impact Statement.

SUMMARY: This Notice of Availability (NOA) is published pursuant to the regulations (40 CFR part 1503 and 43 CFR part 46) implementing the provisions of the National Environmental Policy Act (NEPA) of 1969, as amended (42 U.S.C. 4321 *et seq.* (1988)).

BOEM has prepared a Draft Programmatic Environmental Impact Statement (PEIS) to evaluate potential environmental effects of multiple Geological and Geophysical (G&G) activities in the Mid- and South Atlantic Planning Areas of the OCS. These activities include, but are not limited to, seismic surveys, sidescan-sonar surveys, electromagnetic surveys, geological and geochemical sampling, and remote sensing. The Draft PEIS considers G&G activities for the three program areas managed by BOEM: (1) Oil and gas exploration and development; (2) renewable energy; and (3) marine minerals.

A Notice of Intent (NOI) to prepare the PEIS was published in the **Federal Register** on January 21, 2009, and scoping comments were received during a comment period that closed on March 23, 2009. Scoping was reopened by publication of a **Federal Register** Notice on April 2, 2010, that announced a 45-day scoping period and meeting locations in April 2010. The comment period closed on May 17, 2010.

DATES: Comments on this draft PEIS will be accepted until 60 days following the date of publication in the **Federal Register**.

ADDRESSES: If you wish to comment, you may submit your written comments by the following methods. Written comments should be enclosed in an envelope labeled ''Comments on the Draft PEIS for Atlantic G&G Activities'' and mailed (or hand carried) to Mr. Gary D. Goeke, Chief, Regional Assessment Section, Office of Environment (MS 5410), Bureau of Ocean Energy Management, Gulf of Mexico OCS Region, 1201 Elmwood Park Boulevard, New Orleans, Louisiana 70123–2394. Comments by email should be sent to: *GGEIS@boem.gov.* See **SUPPLEMENTARY INFORMATION** section for information on submitting comments via the internet and the public disclosure of commenters' names and addresses.

FOR FURTHER INFORMATION CONTACT: For more information on the Draft PEIS, you may contact Mr. Gary D. Goeke, Bureau of Ocean Energy Management, Gulf of Mexico OCS Region, 1201 Elmwood Park Boulevard (MS 5410), New Orleans, Louisiana 70123–2394. You may also contact Mr. Goeke by telephone at (504) 736–3233.

SUPPLEMENTARY INFORMATION: To obtain a single printed or CD–ROM copy of the Draft PEIS, you may contact BOEM, Gulf of Mexico OCS Region, Public Information Office (MS 5034), 1201 Elmwood Park Boulevard, Room 250, New Orleans, Louisiana 70123–2394 (1–800–200–GULF). An electronic copy of the Draft PEIS is available at the BOEM's Internet Web site at *http://www.boem.gov/Oil-and-Gas-Energy-Program/GOMR/GandG.aspx.* Several libraries in Atlantic coastal states have also been sent copies of the Draft PEIS (CDs or hard copy; according to their preference and their selection criteria for receipt of government documents). To find out which libraries have copies of the Draft PEIS for review, you may contact BOEM's Public Information Office at the number provided above.

Public hearings will be held on the dates listed below at the specified times and locations. BOEM will receive statements, both oral and written. Persons wishing to speak may request to be placed on the speakers' list by contacting BOEM in advance of a specific public meeting or may sign up to speak upon arrival. To allow time for all speakers to participate, speakers should anticipate time limits for oral testimony.

The following public meetings are scheduled as follows:

April 16, 2012—Jacksonville Marriott, 4760 Salisbury Road, Jacksonville, Florida, 1 p.m. and 7 p.m. EDT.

April 18, 2012—Coastal Georgia Center, 305 Farm Street, Savannah, Georgia, 1 p.m. and 7 p.m. EDT.

April 20, 2012—Embassy Suites North Charleston, 5055 International Boulevard, Charleston, South Carolina, 1 p.m. and 7 p.m. EDT.

April 24, 2012—Hilton Norfolk Airport, 1500 N. Military Highway, Norfolk, Virginia, 1 p.m. and 7 p.m. EDT.

April 25, 2012—Doubletree Hotel, 210 Holiday Court, Annapolis, Maryland, 1 p.m. and 7 p.m. EDT.

April 26, 2012—Sheraton Suites, 422 Delaware Avenue, Wilmington, Delaware, 1 p.m. and 7 p.m. EDT.

April 26, 2012—Hilton Wilmington Riverside, 301 North Water Street, Wilmington, North Carolina, 1 p.m. and 7 p.m. EDT.

April 27, 2012—Atlantic City Convention Center, (Room 301 tentative), One Convention Boulevard, Atlantic City, New Jersey, 1 p.m. EDT.

Public Disclosure of Names and Addresses

Before including your address, phone number, email address, or other personal identifying information in your comment, be advised that your entire comment, including your personal identifying information, may be made publicly available at any time. While you can ask us in your comment to withhold from public review your personal identifying information, we cannot guarantee that we will be able to do so.

Dated: March 26, 2012.

Willie R. Taylor,

Director, Office of Environmental Policy and Compliance.

[FR Doc. 2012–7693 Filed 3–29–12; 8:45 am]

BILLING CODE 4310–VH–P

DEPARTMENT OF JUSTICE

Drug Enforcement Administration

[Docket No. 10–59]

Daniel B. Brubaker, D.O.; Decision and Order

On April 29, 2011, Administrative Law Judge (ALJ) Timothy D. Wing issued the attached recommended decision. Neither party filed exceptions to the decision.

Having reviewed the record as a whole, I have decided to adopt the ALJ's recommended rulings, findings of fact, and conclusions of law in their entirety. Accordingly, I also adopt the ALJ's recommended order.

Order

Pursuant to the authority vested in me by 21 U.S.C. 823(f), as well as 28 CFR 0.100(b), I hereby order that the application of Daniel B. Brubaker, D.O., for a DEA Certificate of Registration as a practitioner, be, and it hereby is, denied. This order is effective immediately.

Dated: March 16, 2012.

Michele M. Leonhart,

Administrator.

Frank Mann, Esq., for the Government
Ronald Kaldor, Esq., for the Respondent

Recommended Ruling, Findings of Fact, Conclusions of Law and Decision of the Administrative Law Judge

I. Introduction

A. The Order To Show Cause

Timothy D. Wing, Administrative Law Judge. This proceeding is an adjudication pursuant to the Administrative Procedure Act (APA), 5 U.S.C. § 551 et seq., to determine whether the Drug Enforcement Administration (DEA) should deny a physician's application for a DEA Certificate of Registration (COR) as a practitioner pursuant to 21 U.S.C. § 823(f). Without this registration Respondent, Daniel B. Brubaker, D.O. (Respondent), of Fresno, California, will be unable to lawfully prescribe, dispense or otherwise handle controlled substances in the course of his practice.

On May 27, 2010, the DEA Deputy Assistant Administrator, Office of Diversion Control, issued an Order to Show Cause (OSC) to Respondent, giving Respondent notice of an opportunity to show cause as to why the DEA should not deny Respondent's application for registration on grounds that his registration would be inconsistent with the public interest as that term is used in 21 U.S.C. § 823(f).

In substance, the OSC alleges that Respondent prescribed controlled substances to patients for no legitimate medical purpose and with ''extreme deviations from the standard of care.'' The OSC further alleges that Respondent was arrested for driving under the influence of controlled substances on June 13, 2008, and that toxicology results revealed the presence of the controlled substances marijuana, modafinil, oxazepam and temazepam, for which Respondent lacked a prescription.

B. Prehearing Proceedings

Because conduct by Respondent's counsel prior to hearing played a prominent role in the constriction of evidence that Respondent was permitted to present at hearing, I address the prehearing proceedings in some detail.

Respondent, through his counsel Ronald Kaldor, Esq., requested a hearing on June 25, 2010. On July 6, 2010, I issued an Order for Prehearing Statements directing the Government to file a prehearing statement by July 13, 2010, and Respondent to file a prehearing statement by July 20, 2010. The Order for Prehearing Statements itemized numerous instructions designed to give the parties notice, *inter alia,* of the grounds upon which claims and defenses would be based, the identity and location of witnesses and the contents of their testimony, and the exhibits each party intended to introduce into evidence. The overriding purpose of prehearing statements in registration proceedings pursuant to section 304 of the Controlled Substances Act (CSA) is to provide parties with an opportunity to fairly and adequately prepare for hearing. *See generally CBS Wholesale Distribs., Inc.,* 74 Fed. Reg. 36,746 (DEA 2009).

The Government timely filed its prehearing statement on July 13, 2010. Respondent filed a document entitled ''Respondent's Prehearing Statements'' on July 20, 2010. Although filed within the deadline for exchanging prehearing statements, this filing was deficient in numerous regards: Respondent failed to identify a single witness, summarize witness testimony, or describe any documents to be potentially offered as exhibits. Arguing that Respondent had impliedly withdrawn his request for a hearing by failing to file a compliant prehearing statement, the Government moved to terminate proceedings on July 22, 2010. After providing Respondent an opportunity to respond to the Government's motion, I found that although Respondent's initial prehearing statement of July 20, 2010, was ''substantially deficient and does not comply with the directions set forth in the Order for Prehearing Statements or 21 C.F.R. § 1316.57, I do not find at this time that Respondent's actions constitute a waiver of hearing.'' (Mem. to Counsel and Order, July 30, 2010.) I ordered Respondent to file a compliant supplemental prehearing statement no later than August 3, 2010.

On August 3, 2010, Respondent filed a supplemental prehearing statement. This document, too, was deficient in numerous respects. For instance, Respondent vaguely outlined the testimony of his witnesses instead of ''stat[ing] what the testimony will be rather than merely listing the areas to be covered,'' as required by the Order for Prehearing Statements. Respondent also failed to provide addresses for three witnesses. In addition, although the Order for Prehearing Statements directed that ''[i]f Respondent intends to testify, Respondent must be identified as a witness, and a summary of the testimony * * * must be provided,'' Respondent's August 3, 2010 supplemental prehearing statement did not list Respondent as a witness.

I issued a Prehearing Ruling on August 6, 2010. The Prehearing Ruling noted that any testimony not summarized in prehearing statements, and any documents not listed therein, could be excluded at hearing. The Prehearing Ruling also set a deadline of October 4, 2010, for the filing of supplemental prehearing statements; set November 8, 2010, as the deadline for filing any anticipated motions and exchanging documents intended to be offered as exhibits at hearing; and set November 15, 2010, as the deadline for providing the Administrative Law Judge (ALJ) with copies of all such documents.[1]

On October 28, 2010, the Government filed a Motion of Government to File Supplemental Prehearing Statement Out of Time, seeking to eliminate several Government exhibits and add the curriculum vitae (CV) of the Government's expert witness. The Government represented that Respondent did not object, and I granted the Government's motion on October 29, 2010.

On November 12, 2010, a telephonic Supplemental Prehearing Conference

[1] On November 15, 2010, the Government timely filed its exhibits in compliance with the August 6, 2010 Prehearing Ruling. Prior to hearing, Respondent did not file any exhibits with the ALJ, and the Government represents, and Respondent does not challenge, that Respondent did not serve on the Government any of the seven documents listed in his August 3, 2010, supplemental prehearing statement.

was held with Government counsel and Respondent's counsel. At the Supplemental Prehearing Conference, counsel for Respondent withdrew Respondent's expert witness, Thomas O'Laughlin, M.D., and indicated Respondent's desire to obtain a replacement expert. Respondent also indicated his desire to call Respondent to testify as a witness, despite the fact that Respondent's prehearing statement and supplemental prehearing statement did not list Respondent as a witness.[2] Counsel for the Government indicated, however, that from previous conversations with counsel, the Government was on notice of Respondent's intention to call Respondent as a witness.[3]

In addition, counsel for Respondent stated that Respondent no longer intended to call Karen Fu, LMFT, as a witness.[4] Finally, counsel for Respondent stated that he intended to provide addresses for Respondent's witnesses Stephen Duvall, Anita Peralda and ''Jerry MCDonadl'' [sic] (Resp't Supp. PHS at 2), and that he intended to indicate with specificity, albeit belatedly by approximately forty days,[5] their proposed testimony.

Counsel for Respondent further indicated his intention to file a (second) supplemental prehearing statement on Monday, November 15, 2010, embracing the changes and updates to witness information discussed *supra.* Counsel for Respondent acknowledged that the August 6, 2010 Prehearing Ruling set the deadline for supplemental prehearing statements at October 4, 2010, and set the deadline for filing motions at November 8, 2010. Counsel for Respondent accepted responsibility for missing these deadlines, but attributed this failure to a lack of familiarity with the ''federal rules.''

I issued a Supplemental Prehearing Ruling on November 12, 2010, summarizing the Supplemental Prehearing Conference and ordering Respondent to file a proposed second supplemental prehearing statement, accompanied by a separate motion to accept late filing supported by a statement of good cause, no later than November 15, 2010.

On Wednesday, November 17, 2010, Respondent filed, two days out of time, a document entitled ''Second Supplemental Respondent's Prehearing Statement,'' along with a Motion to Accept Late Filing, also filed two days out of time. On November 19, 2010, the Government filed its Opposition to Respondent's Motion to Accept Late Filing, Motion to Terminate Proceedings or, in the alternative, Motion *In Limine.* Pursuant to the August 6, 2010 Prehearing Ruling, Respondent had three business days after service of the Government's motions to file a response. Respondent did not respond.[6]

Ruling on Respondent's Motion to Accept Late Filing of his proposed supplemental prehearing statement on November 30, 2010, I found that

> Viewed as a whole, Respondent's failures are serious and present the specter of real prejudice to the Government. Because Respondent's motion to accept late filing was itself filed late without good cause, because the motion was not supported by good cause, and because the proposed second supplemental prehearing [statement] is noncompliant with the Order for Prehearing Statements, I reject the filing of Respondent's second supplemental prehearing statement.

(Mem. and Order, Nov. 30. 2010, at 9.)

Turning to the Government's Motion to Terminate, I found that ''although the deficiencies in Respondent's counsel's handling of Respondent's case are indeed serious, they cannot support a finding that Respondent has actually withdrawn or waived his request for a hearing.'' (*Id.* at 11.)

Addressing the Government's Motion *in limine,* I found that fairness and Agency precedent required the constriction of the evidence that Respondent could permissibly present at hearing, in light of Respondent's numerous, repeated and prejudicial failures to comply with the Order for Prehearing Statements and subsequent Orders, as detailed above and analyzed in my November 30, 2010 ruling. I therefore ordered that with the exception of Respondent himself, no witness would be permitted to testify who was not named either by the Government in its prehearing statement, as duly supplemented on October 28, 2010, or by Respondent in Respondent's supplemental prehearing statement filed August 3, 2010; that Respondent would not be permitted to introduce documentary evidence regarding the prescribing, dispensing or administering of controlled substances to any of the patients named in the Government's prehearing statement, as supplemented; that Respondent would not be permitted to introduce documentary evidence that he legally consumed, or had legal authority to possess and consume, the controlled substances found in his system following his arrest on June 13, 2008; and that Respondent would not be permitted to introduce any documentary evidence of any kind or manner, absent a specific showing of good cause at hearing. Respondent was not precluded from seeking admission of documents related to issues such as witness credibility or rebuttal of evidence.[7]

On December 3, 2010, Respondent filed Respondent's Motion *In Limine,* seeking to prevent the Government's expert witness, Dr. James L. Gagné, from testifying at the hearing. In support of his motion, Respondent stated he interpreted my November 30, 2010 ruling on the Government's motion *in limine* to ''limit the testimony of Respondent in his defense,'' arguing that the Government's expert should not be permitted to testify because otherwise ''Respondent will be precluded from a fair opportunity to defend himself and from receiving his due process rights . . . .'' (Resp't Mot. in Limine, Dec. 3, 2010, at 1.) Inasmuch as Respondent filed his motion two business days before the hearing, Respondent's motion was resolved on the record at the beginning of the hearing. After giving each party an opportunity to be heard, I denied Respondent's motion as meritless.[8] (Transcript (Tr.) 21.)

Following prehearing procedures, a hearing was held in Fresno, California, between December 7, 2010, and December 8, 2010, with the Government represented by counsel and Respondent

[2] The July 6, 2010 Order for Prehearing Statements states: ''If Respondent intends to testify, Respondent must be listed as a witness, and a summary of the testimony * * * must be provided.''

[3] Counsel also suggested that James Hambuechen, previous Government counsel, requested a subpoena for Respondent's testimony. The record, however, reveals no such subpoena or request.

[4] Ms. Fu's name appears as a potential witness in Respondent's August 3, 2010 ''Supplemental Respondent's Prehearing Statements.''

[5] The July 6, 2010 Order for Prehearing Statements set forth a deadline of July 20, 2010, for the filing of Respondent's prehearing statement. Per the August 6, 2010 Prehearing Ruling, supplemental prehearing statements were due on October 4, 2010.

[6] Counsel for Respondent had indicated that ''I will be out of my office on vacation . . . from November 22 to November 29 and will not be able to access any communications.'' (Resp't Mot. Late Filing, Nov. 17, 2010, at 2.) Under the circumstances, I declined to construe this unsworn statement as a motion to extend the three-day deadline for responding to motions, established by the August 6, 2010 Prehearing Ruling. Even so construed, I found there was no good cause for extending the filing deadline. First, counsel for Respondent's duty of diligence requires that he designate alternate counsel during his anticipated absence. Second, ''if one can find time to take vacation, he can also find time to file a . . . pleading . . ..'' *Kamir Garces-Mejias,* 72 Fed. Reg. 54,931–02, 54,933 (DEA 2007).

[7] *See* Mem. Order, Nov. 30, 2010, at 14 n.10. At hearing Respondent only offered, and subsequently withdrew, Respondent's CV. I indicated the document would in any case be excluded in accordance with an earlier ruling. (Tr. 299–300.) Respondent did not provide a copy of the CV to this tribunal, and consequently no copy is included in the record.

[8] Respondent's testimony at hearing spans approximately 181 transcript pages. (*See* Tr. 300–481.)

represented by counsel. Both parties called witnesses to testify and both had the opportunity to introduce documentary evidence, although the evidence Respondent was ultimately permitted to introduce was limited by my November 30, 2010 ruling as noted above. After the hearing, both parties filed proposed findings of fact, conclusions of law, and argument.[9] All of the evidence and post-hearing submissions have been considered, and to the extent the parties' proposed findings of fact have been adopted, they are substantively incorporated into those set forth below.

II. Issue

Whether the record establishes by substantial evidence that Respondent's application for a DEA COR, assigned control number W09177610C, should be denied because Respondent's registration would be inconsistent with the public interest as that term is used in 21 U.S.C. § 823(f).

III. Evidence and Incorporated Findings of Fact [10]

I find, by a preponderance of the evidence, the following facts:

A. Stipulated Facts

Respondent applied for a DEA registration as a practitioner in Schedules II through V on or around August 26, 2009. (ALJ Ex. 4.) Respondent surrendered his previous DEA registration on August 21, 2008. (*Id.*)

B. The Government's Evidence

DEA Diversion Investigator Jack L. Lewis (DI Lewis) has been a DEA Diversion Investigator for five years. (Tr. 271.) DI Lewis received training as a diversion investigator at a DEA training facility in Quantico, Virginia. (Tr. 272.)

Dr. James Laurent Gagné (Dr. Gagné) is a physician. (Tr. 27.) He resides in Valley Village, California and received a bachelor's degree from Columbia University and a medical degree from Albert Einstein College of Medicine of Yeshiva University in Bronx, New York. (Gov't Ex. 4.) He is board certified in internal medicine, addiction medicine and pain medicine and presently sees several hundred patients. (Tr. 28.) Approximately one third of them are pain management patients. (Tr. 197.) He estimates that he prescribes opiates to approximately half of his pain patients. (Tr. 203.)

Among other certifications, Dr. Gagné holds Diplomates from the National Board of Medical Examiners and the American Board of Internal Medicine. (Gov't Ex. 4; *see* Tr. 29.) He is certified in addiction medicine by the American Society of Addiction Medicine, and holds a Diplomate from the American Board of Pain Medicine. (Gov't Ex. 4; *see* Tr. 31.) Dr. Gagné is a member of nineteen professional associations, including the International Association for the Study of Pain, the American Pain Society, the Western Pain Society, the American Association for Pain Medicine, the American Society for Addiction Medication and the California Society for Addiction Medicine. (Gov't Ex. 4.)

Dr. Gagné completed an internship and his first medical residency at Lincoln Hospital, Albert Einstein College of Medicine between 1973 and 1975. (Gov't Ex. 4; Tr. 32.) He completed a second residency at Kaiser-Permanente Medical Center in Santa Clara, California in 1976. (Gov't Ex. 4.) Between 1976 and the present, Dr. Gagné has served in a variety of positions ranging from Clinical Medical Director, UCLA Pain Control Unit in Los Angeles, to Chairman of the Department of Medicine at the Verdugo Hills Hospital in Glendale, California. (Gov't Ex. 4; *see* Tr. 32–34.)

Presently, Dr. Gagné is an associate physician at a Glendale, California primary care internal medicine group and a consulting physician at a Malibu, California recovery home. (Gov't Ex. 4.) He previously taught as an Assistant Professor of Family Medicine at USC Keck School of Medicine from 2000 to 2008. (Gov't Ex. 4; Tr. 30.) Dr. Gagné has also given numerous lectures, authored various publications and participated in continuing medical education programs. (Gov't Ex. 4; Tr. 35–36.) He has served as an expert reviewer for the California Medical Board and has served as an expert witness on two cases for the United States Department of Justice. (Tr. 36–39.)

Dr. Gagné was qualified and I have accepted him as an expert witness, without objection, in the profession of internal medicine, addiction medicine and pain management medicine in the State of California. (Tr. 39–40; Gov't Ex. 4.)

DEA Investigation of Respondent's Prescribing Practices

Dr. Gagné testified to being familiar with California and federal law regarding the prescribing of controlled substances. (Tr. 40.) To issue a prescription for controlled substances within the usual course of a physician's professional practice, there must be a genuine and valid physician-patient relationship. (Tr. 40–41.) The physician must keep a medical record, determine the patient's history and symptoms, conduct a physical examination and document laboratory findings. (Tr. 41.) When prescribing drugs with side-effects, the physician must make a risk-benefit assessment. (Tr. 41.) Standards can differ depending on whether a patient is seeking treatment on an emergency basis, but Dr. Gagné testified that none of the nine patients of Respondent whose files Dr. Gagné reviewed sought treatment on an emergency basis. (Tr. 41–42.)

Dr. Gagné defined ''chronic pain'' as a painful condition lasting more than three months after the acute illness giving rise to the pain has been resolved. (Tr. 42, 209.) In determining whether a patient is truly suffering from chronic pain, a physician must trust the patient but also must compare objective evidence with a patient's subjective complaints because some patients exaggerate symptoms. (Tr. 43.) A physician must listen both to what the patient says and to what the patient does not say, to ''learn[] some of the implications and context and things that people are not saying but are kind of present in the room.'' (Tr. 207.) In treating a pain patient, a physician must obtain several aspects of a patient's history, to include the patient's present illness, past medical history, social history, psychiatric history, family history, review of symptoms and addiction history.[11] (Tr. 43–44.) In obtaining this information,[12] Dr. Gagné called the following components essential: How the pain began, the course of the illness, the course of treatment and diagnostic procedures and the patient's current symptoms, including neurological symptoms. (Tr. 45–46.) When prescribing controlled

[9] In a December 27, 2010 letter to counsel, the Office of Administrative Law Judges advised that briefs would be due by 4 p.m. Eastern Daylight Time on January 25, 2011. The Government timely filed its brief. Respondent filed his brief on January 26, 2011, and on January 27, 2011, filed a motion to accept the late filing. In the absence of an objection from the Government, and inasmuch as it appeared no prejudice would result, I granted Respondent's motion. (*See* Ruling on Resp't Mot. to Accept Late Filing, Apr. 28, 2011.)

[10] In addition to the evidence discussed in this Section, additional evidence and findings of fact are discussed in later Sections of this Recommended Decision.

[11] In the case of a patient using marijuana or other illicit drugs, Dr. Gagné ''would take 100 percent full-fledged addiction history.'' (Tr. 56–57.)

[12] As for the amount of time it takes to gather this information from the patient, Dr. Gagné testified that ''I am very much of an outlier, so I take longer than most of my colleagues. And it takes me one or two hours [which is] not the standard of practice, that's how I do it.'' (Tr. 206.) Moreover, it is not necessarily required or advisable to obtain all this patient information at once or in a single visit. (Tr. 206.)

substances, it is critical to obtain a list of the patient's prior medications. (Tr. 47.) Among other reasons, a patient's history of medication gives a physician a ''sense of the appropriateness of the patient's use of the controlled substances and whether they're likely to be a problem.'' (Tr. 48.)

It is also important to collaborate with a patient's previous physicians to verify that a patient has truthfully represented the amount of medication she has taken in the past. (Tr. 48.) The importance of obtaining a patient's prior medical records, and ordering X-rays or MRIs, varies with the patient based on the complexity of the illness and the previous course of treatment. (Tr. 48–49, 54.) The importance of obtaining such documentation increases when prescribing controlled substances because among therapies, controlled substances are unique in that some patients ''will engage in substantial misdirection, lying, and manipulation to obtain them.'' (*See* Tr. 51.)

Conducting a physical examination is also critical prior to prescribing controlled substances. (Tr. 52.) In addition to at least one comprehensive ''head to toe'' exam, a physician should conduct a ''relatively-detailed orthopedic-style examination or rheumatologic-style evaluation.'' (Tr. 52.) In a patient with lower back pain, for instance, such an examination might include watching the patient walk and observing range of motion, checking for tenderness or deformity of the spine, checking the neurologic function for weakness or lack of sensation and checking muscles and joints for spasm or tenderness. (Tr. 52.) Prescribing controlled substances without an office visit by the patient is something

> that mostly you don't do, but there are circumstances in which you have a long-term patient who's stable, where the drug doses aren't changing, and there's absolutely no problem at all, and you know very well that they're doing well, and they're not going to come in and telling you they're crashing or they need more or this or that.

(Tr. 222.)

The upshot, Dr. Gagné explained, is that before prescribing controlled substances, ''there has to be enough information in the record to be meaningful, it has to add up to something. Or if you don't, you refer somebody out for * * * evaluation and then you base your treatment on a specialist's evaluation.'' (Tr. 213.)

Documenting the various steps described above in a patient's medical record is important. Although it is not practical to document every word spoken or action taken at a patient consultation, the medical community nevertheless presumes that ''if it's not in the medical records, it's assumed not to have happened.'' [13] (Tr. 54.) Dr. Gagné elaborated that the burden of proof is on the physician: ''[T]he standard is that a competent physician can pick up the medical record and understand without too much trouble what happened.'' (Tr. 214.) Physicians who treat a patient based on an analysis not documented in the patient's medical chart are ''subjecting themselves to high risk of problems down the road.'' (Tr. 216.)

Dr. Gagné also clarified that there is a difference between a diagnosis and a symptom. Low back pain, for instance, is not a diagnosis of an illness but is instead a symptom that can be due to at least a dozen causes. (Tr. 56.) When patients seek controlled substances, it is important to perform an independent diagnosis regarding any possible addiction. (Tr. 56.)

Dr. Gagné recognizes the validity of opiates in the treatment of chronic pain and relies on opiates to treat some of his patients. (Tr. 57–58.) But even when a patient is in pain and the pain is confirmed by a doctor, it is not necessarily appropriate to prescribe opiates in all instances; other treatments may be more effective.[14] (Tr. 57–58.) When prescribing controlled substances, the physician should give the lowest dose consistent with a beneficial clinical outcome and periodically review the treatment's efficacy. (Tr. 59–60.) Although there is a legitimate ''role for dose finding,'' it is inappropriate to blindly increase a dosage when a given dosage isn't working. (Tr. 60.) Increasing a dosage on the sole grounds that a patient requests an increase is inappropriate without an assessment of the patient's symptoms, function, sleep, mood and other factors. (Tr. 61.)

As signals indicating the potential addiction to or diversion of controlled substances, Dr. Gagné identified a number of ''red flags.'' When a red flag occurs, ''one needs to sort out what's going on before continuing to prescribe the medications * * * there are kinds of red flags where you simply have to stop, you can't continue to prescribe controlled drugs.'' (Tr. 64–65.) Red flags include a patient asking for larger doses; a claim that ''my dog ate my prescription,'' that the patient dumped the prescription down the toilet, that the prescription was stolen or other ''dramatic stories of how my drugs suddenly disappeared and I need more''; a patient requesting an advance supply due to anticipated travel when the patient later tries to refill the prescription before the extra dosage should have been consumed; evidence that the patient has obtained controlled substances from more than one physician or is using more than one or two pharmacies; increasingly bizarre statements about the need for opiates; and missing appointments frequently. (Tr. 62–64.) Moreover, a patient who exaggerates the type of medication she has previously taken under the care of a prior doctor poses the sort of red flag that requires a physician to ''stop prescribing controlled substances until you sort out what's going on.'' (Tr. 63.) A patient who uses illicit drugs is a ''huge red flag'' and ''it would be very inappropriate to prescribe controlled prescription medications to such a patient absent other extremes.'' (Tr. 63.) A patient's reluctance to provide medical records or claims of frequent injuries are also red flags. (Tr. 64.)

As ''yellow flags'' that could signal addiction or diversion, Dr. Gagné identified instances of patients requesting brand-name drugs instead of settling for generic alternatives; patients who pay by cash; patients who use marijuana for medicinal purposes [15] (Tr. 62–64); and a prescribing physician writing ''DAW'' or ''dispense as written'' on a prescription.[16] (Tr. 93.)

Dr. Gagné also identified various controlled substances.[17] Oxycodone is a powerful opiate with a high abuse potential. (Tr. 49.) Oxydose and Oxyfast are varieties of oxycodone.[18] (Tr. 49, 113.) Hydrocodone is another powerful opiate with a lower strength but high abuse potential. (Tr. 49.) Norco is a brand name of hydrocodone mixed with Tylenol or acetaminophen. (Tr. 49.)

[13] For instance, a doctor should have a serious discussion with a chronic pain patient about the possibility of physical therapy, and document the conversation in the record. (Tr. 59.)

[14] Dr. Gagné also cautioned that ''there is not one single medical or scientific study that shows that opiates are safe or effective in the treatment of chronic pain.'' (Tr. 57.)

[15] Dr. Gagné elaborated that in California, where marijuana may legally be prescribed for medical purposes, a doctor must first establish a medical diagnosis and also conduct an addiction history, given the drug's high addiction potential. (Tr. 77–78.)

[16] This practice can indicate a potential for diversion, as follows. (Tr. 94.) With respect to OxyContin and Vicodin ES, for example, there is no difference therapeutically between the brand name and the generic version. (Tr. 94.) Although some patients believe the brand name is more effective, requesting a brand name ''can be a way of showing customers who are buying the drugs secondarily that this is the real thing, because generics are pretty nondescript tablets, and you don't know what you're getting.'' (Tr. 94.)

[17] *See generally* 21 U.S.C. § 812 (establishing five schedules of controlled substances); 21 C.F.R. § 1308.11–15 (2010) (listing the controlled substances in Schedules I—V).

[18] Dr. Gagné's also testified that OxyContin is a brand of oxycodone, an opiate and a controlled substance. (Tr. 39, 114, 126.)

Kadian is a time-release form of morphine and Actiq is a brand name of fentanyl. (Tr. 49.) Xanax is a highly-addicting and frequently abused opiate. (Tr. 39, 78.) Valium is diazepam, a benzodiazepine and sedative with moderate addiction potential. (Tr. 50.) Dilaudid is ''the most powerful opiate that I'm aware of with an incredibly high addiction potential.'' (Tr. 50.) Phenergan is a powerful sedative with anti-nausea properties, and codeine is an opiate with moderate abuse potential. (Tr. 50.)

Based upon a review of nine of Respondent's patient files offered at hearing,[19] Dr. Gagné opined that ''there were some patients where there was nothing that really approached what I consider anything like medical care, and others where it was more like medical care.'' (Tr. 215–16.) As detailed in a later Section of this Recommended Decision, Dr. Gagné opined that Respondent's prescribing of controlled substances to his patients was characterized by

> grossly inadequate medical records and virtually a complete absence of clinical information. No meaningful history, no meaningful physical examination, no past medical history, no family history, no review of systems, et cetera, nothing. No physical exam worthy of the name * * *. there were structures in the chart that had those titles, but the data was absent. Another reason is patients who it became clear were grossly misusing their medications or getting them from multiple sources. At that point there can no longer be a legitimate medical purpose of continuing controlled drugs. Or when a patient is being admitted [or referred] to rehabilitation facility for drugs * * * you don't keep just prescribing the same old controlled drugs you always were.

(Tr. 223–24.)

C. Respondent's Evidence

Daniel B. Brubaker, D.O. (Respondent) is an osteopathic physician. (*E.g.,* Tr. 204.) Respondent was previously registered with DEA as a practitioner and surrendered his registration on August 21, 2008. (ALJ Ex. 4.) Respondent subsequently applied for a new COR following the execution of a search warrant at his office. (*E.g.,* Tr. at 273–74.) The number associated with Respondent's application is W09177610C. (Gov't Ex. 1.)

Respondent attended Elizabethtown College in Pennsylvania and graduated from Philadelphia College of Osteopathic Medicine in 1974. (Tr. 300.) He undertook clinical and pathological training and completed a residency at the University of Pittsburgh. (Tr. 300.) Respondent is board certified in anatomic pathology, clinical pathology and immunohematology and holds certifications for various procedures. (Tr. 301.) He possesses seventeen years of experience in transfusion and transplantation medicine, has served as medical director of three different blood centers and has completed continuing medical education units since beginning his medical career. (*See* Tr. 301–02.) Respondent has also taught medical students, residents and interns at the University of Oklahoma and UCLA and has published in twenty-five peer-reviewed journals, including articles on innovative approaches to making blood transfusions safer. (Tr. 301–02, 310.)

Respondent also testified to his medical history. He developed cancer of the colon in late November 2000, which was resolved by chemotherapy and surgery in 2004. (Tr. 307.) Because the cancer had metastasized to his liver, Respondent underwent surgery to remove the right lobe of his liver in February 2002. (Tr. 307.) In 2004, Respondent underwent surgery for sleep apnea. (Tr. 311.) In 2005, Respondent underwent an invasive inpatient operation to perform three ablations to address atrial fibrillation. (Tr. 312.)

Respondent further testified to marital and family issues, and his own related mental health issues. In 2004, Respondent was divorced. (Tr. 313.) In 2006, Respondent and his ex-wife disputed the custody of their son. (Tr. 313–14.) At that time, Respondent was experiencing depression. (Tr. 314.) As a result of the custody dispute, Respondent was permitted to see his son for three hours. (Tr. 314.) Thereafter, Respondent was not permitted to see his son. (*See* Tr. 314.)

Turning to Respondent's medical practice, Respondent testified that in or around 1997, Respondent went into private practice as an internist. (Tr. 304–05.) For approximately ten years he performed workers' compensation assessments. (Tr. 305.) During this time Respondent worked under a grant from the National Institutes of Health to develop an *in vitro* bleeding time test. (Tr. 306.)

From 2000 to the present, Respondent has taken pain management courses with the American Academy of Pain Management. (Tr. 308.) In 2004 or 2005, Respondent purchased a medical practice in Fresno, California and began treating pain management patients at a time when approximately five or six area physicians practiced pain management. (Tr. 307, 315; 310.) The practice slowly evolved to the point where most of his patients were pain management patients. (Tr. 309.) Respondent testified to experiencing managerial difficulties and theft during the early years of this practice. (Tr. 316–20.)

Paul J. Markowitz (Dr. Markowitz), a board-certified psychiatrist, testified on behalf of Respondent. (Tr. 258.) Dr. Markowitz received a bachelor's degree and subsequently completed the M.D.-Ph.D. program at Case Western Reserve University in Cleveland, Ohio. (Tr. 256.) Following an internship at the University Hospitals of Cleveland, Dr. Markowitz completed a post-doctoral fellowship in neuropsychopharmacology at Oxford through the National Science Foundation. (Tr. 257.) Following two years working at the Cleveland Clinic and a residency at the University Hospitals of Cleveland, Dr. Markowitz worked as a professor. (Tr. 257.) In approximately 2000 Dr. Markowitz moved to California, where he has practiced for the past ten years. (Tr. 257.) His practice consists of a sixty-hour week, with twenty or twenty-five hours devoted to seeing patients and the balance of his time spent on research trials. (Tr. 258.) Respondent became a patient of Dr. Markowitz in 2005. (Tr. 259.)

David Smiley Purvis (Mr. Purvis), who testified on behalf of Respondent, is a licensed clinical social worker. (Tr. 292.) He holds a bachelor's degree from Fresno State University and in 1985 received a master's degree in social work. (Tr. 292.) Mr. Purvis testified to having counseled Respondent on a weekly basis on anger and frustration management since approximately May 2008. (Tr. 292, 294.) He explained that Respondent's divorce and lack of contact with his son, for whom Respondent cares deeply, were a very difficult and emotional experience for Respondent. (Tr. 293.) Mr. Purvis also testified to having visited Respondent's practice location to observe how Respondent treated pain management patients, based on Mr. Purvis's own professional and personal[20] interest in how doctors treat pain management. (Tr. 294–95.) Respondent expressed interest in how his own therapy with Mr. Purvis

[19] The record reflects some variance on the number of files reviewed. The OSC indicated that Dr. Gagné reviewed ten of Respondent's files. (ALJ Ex. 1.) Dr. Gagné's written report states that ''eight'' patient files were reviewed, but substantively addresses nine patients. (Gov't Ex. 3 at 1.) Testimony at hearing also indicated there was ''yet another file that Dr. Gagné reviewed'' (Tr. 288) but that was not included in this particular case, reflecting a total of ten files reviewed by Dr. Gagné.

[20] Mr. Purvis explained that his wife was on ''very, very serious medications'' to treat pain arising out of a 2005 airplane crash. (Tr. 295, 297.)

could help Respondent's patients. (Tr. 297.)

IV. The Parties' Contentions

A. The Government

The Government urges that Respondent's registration would be inconsistent with the public interest and states as follows. (Tr. 8.) First, Respondent repeatedly issued large quantities of highly-addictive controlled substances to patients without a legitimate medical purpose and outside the usual course of professional practice. (Tr. 8–9.) Some of these patients were suspected drug abusers, addicts and dealers, and yet Respondent continued to supply them with narcotics. (Tr. 9.) Second, Respondent has misused controlled substances, having been arrested while driving under the influence of controlled substances, and having tested positive for several controlled substances, including marijuana. (Tr. 8.)

The Government argues in its post hearing brief that ''factors two, four and five are relevant in determining whether Respondent's application * * * should be denied.'' (Gov't Br. at 25.) The Government argues in substance that Respondent has been responsible for the diversion of large quantities of controlled substances by prescribing ''controlled substances to patients without a legitimate medical purpose and/or outside the course of professional practice.'' (*Id.*) The Government further argues that Respondent ''arguably violated Federal and state law prohibiting the unauthorized use of marijuana and prescription drugs.'' (*Id.* at 28 (citing 21 U.S.C. § 844).) The Government argues that ''Respondent's complete failure to admit fault or accept responsibility weighs heavily in the public interest determination.'' (*Id.* at 28.) Finally, the Government argues that Respondent has provided no facts demonstrating mitigating circumstances and due to Respondent's lack of credibility, his testimony should be given no weight. (*Id.* 29–31.)

B. Respondent

Respondent argues that he is a competent, capable, able physician who is nothing like the image that the Government has portrayed. (Tr. 11.) Respondent denies having prescribed large amounts of controlled substances without a legitimate medical purpose. (Tr. 12.) Moreover, Respondent contends that the Government's expert witness, Dr. Gagné, has a different approach to pain management than does Respondent. (Tr. 12.)

Respondent also argues that evidence of medical and domestic issues affecting Respondent during the time period in question should inform an interpretation of Respondent's conduct. (Tr. 12.) In his post hearing brief, Respondent further argues that the voluntary surrender of his registration on August 21, 2008, is not a ground to support denial. (Resp't Br. at 8.) Similarly, Respondent argues that the ''sole conviction for a 'wet and reckless' misdemeanor,'' in light of Respondent's medical and personal history, does not support a denial of his application for registration. (*Id.* at 8–9.)

Respondent argues that Factors One and Three are inapplicable. Respondent maintains the major issue is his clinical treatment of nine patients, and notes there ''were specific mistakes which Respondent made in treating those patients.'' (*Id.* at 9.) Respondent argues in substance that there is ''little conclusive evidence'' of Respondent acting with disregard to the health of his patients or public, and that the record contains substantial evidence that Respondent ''was improving his pain and medical practice protocols.'' (*Id.*) Respondent ''acknowledges that his record-keeping can improve'' but argues that he ''had significant difficulties with office staff, burglaries and has taken a remedial records course.'' (*Id.*)

V. Discussion

A. The Applicable Statutory and Regulatory Provisions

The CSA provides that any person who dispenses (including prescribing) a controlled substance must obtain a registration issued by the DEA in accordance with applicable rules and regulations.[21] ''A prescription for a controlled substance to be effective must be issued for a legitimate medical purpose by an individual practitioner acting in the usual course of his professional practice. The responsibility for the proper prescribing and dispensing of controlled substances is upon the prescribing practitioner'' with a corresponding responsibility on the pharmacist who fills the prescription.[22] It is unlawful for any person to possess a controlled substance unless that substance was obtained pursuant to a valid prescription from a practitioner acting in the course of his professional practice.[23] In addition, I conclude that the reference in 21 U.S.C. § 823(f)(5) to ''other conduct which may threaten the public health and safety'' would as a matter of statutory interpretation logically encompass the factors listed in § 824(a).[24]

B. The Public Interest Standard

Pursuant to 21 U.S.C. § 823(f), the Deputy Administrator may deny an application for a DEA COR if she determines that such registration would be inconsistent with the public interest. In determining the public interest, the Deputy Administrator is required to consider the following factors:

(1) The recommendation of the appropriate state licensing board or professional disciplinary authority.

(2) The applicant's experience in dispensing or conducting research with respect to controlled substances.

(3) The applicant's conviction record under federal or state laws relating to the manufacture, distribution or dispensing of controlled substances.

(4) Compliance with applicable state, federal or local laws relating to controlled substances.

(5) Such other conduct which may threaten the public health and safety.

As a threshold matter, the factors specified in Section 823(f) are to be considered in the disjunctive: the Deputy Administrator may properly rely on any one or a combination of those factors, and give each factor the weight she deems appropriate, in determining whether a registration should be revoked or an application for registration denied. *See David H. Gillis, M.D.,* 58 Fed. Reg. 37,507, 37,508 (DEA 1993); *see also D & S Sales,* 71 Fed. Reg. 37,607, 37,610 (DEA 2006); *Joy's Ideas,* 70 Fed. Reg. 33,195, 33,197 (DEA 2005); *Henry J. Schwarz, Jr., M.D.,* 54 Fed. Reg. 16,422, 16,424 (DEA 1989). Application of the public interest factors requires an individualized determination and assessment of prescribing and record-keeping practices that are ''tethered securely to state law . . . and federal regulations.'' *Volkman v. DEA,* 567 F.3d 215, 223 (6th Cir. 2009). Additionally, in an action to deny a registrant's COR, the DEA has the burden of proving that the requirements for revocation are satisfied.[25] The burden of proof shifts to the respondent once the Government has made its prima facie case.[26]

[21] 21 U.S.C. § 822(a)(2); 21 U.S.C. § 802(10).

[22] 21 C.F.R. § 1306.04(a).

[23] 21 U.S.C. § 844(a).

[24] *See Kuen H. Chen, M.D.,* 58 Fed. Reg. 65,401, 65,402 (DEA 1993).

[25] *See* 21 C.F.R. § 1301.44(e) (2010).

[26] *See Medicine Shoppe—Jonesborough,* 73 Fed. Reg. 364, 380 (DEA 2008); *see also Thomas E. Johnston,* 45 Fed. Reg. 72,311, 72,311 (DEA 1980).

C. The Factors To Be Considered

Factors 1 and 3: The Recommendation of the Appropriate State Licensing Board or Professional Disciplinary Authority and Conviction Record Under Federal or State Laws Relating to the Manufacture, Distribution or Dispensing of Controlled Substances

In this case, regarding Factor One, it is undisputed that Respondent currently holds a valid unrestricted osteopathic medical license in California, but Respondent's license has been the subject of a ''review [by] the California Medical Board with regard to the appropriateness of [Respondent's] care'' (Tr. 71), the results of which are unknown.[27] While not dispositive, Respondent's possession of a valid unrestricted osteopathic medical license in California does weigh in favor of a finding that Respondent's registration would not be inconsistent with the public interest. *See Robert A. Leslie, M.D.,* 68 Fed. Reg. 15,227, 15,230 (DEA 2003) (state license is a necessary, but not a sufficient condition for registration, and therefore, this factor is not dispositive).

Regarding Factor Three, there is no evidence that Respondent has ever been convicted under any federal or state law relating to the manufacture, distribution or dispensing of controlled substances. I therefore find that this factor, although not dispositive, *see Leslie,* 68 Fed. Reg. at 15,230, weighs against a finding that Respondent's registration would be inconsistent with the public interest.

Factors 2 and 4: Respondent's Experience in Handling Controlled Substances; and Compliance With Applicable State, Federal or Local Laws Relating to Controlled Substances

In this case, there is indeed evidence that Respondent has failed to remain in compliance with applicable federal and state law relating to controlled substances, and that his past experience in dispensing controlled substances with regard to nine patients was inconsistent with the public interest. The evidence at hearing centered in substantial part on nine patient files previously seized from Respondent's office on August 21, 2008.[28] (ALJ Ex. 1; Tr. 336–38.) In addition to the patient files, the Government presented the testimony and written report of a medical expert witness, Dr. Gagné, with regard to his review of the nine patient files along with his opinion as to whether Respondent issued prescriptions in each instance for a legitimate medical purpose and in the usual course of professional practice. The patient files related to office visits with Respondent occurring at various dates between 2006 and 2008.[29] Respondent testified as to his standard of care and treatment for each of the nine patients, along with his past experience, among other testimony.

Evaluation of Respondent's prescribing conduct in this case is governed by applicable federal and state law. The applicable standard under federal law is whether a prescription for a controlled substance is ''issued for a legitimate medical purpose by an individual practitioner acting in the usual course of his professional practice.'' 21 C.F.R. § 1306.04(a). The standard of care refers to that generally recognized and accepted in the medical community rather than a standard unique to the practitioner. *Robert L. Dougherty, M.D.,* 76 Fed. Reg. 16,823, 16,832 (DEA 2011) (citing *Brown* v. *Colm,* 11 Cal.3d 639, 642–43 (1974)). Although it is recognized that state law is a relevant factor in determining whether a practitioner is acting in the ''usual course of professional practice,'' it is also appropriate in the context of an inquiry under federal law to also consider ''generally recognized and accepted medical practices'' in the United States. *Bienvenido Tan, M.D.,* 76 Fed. Reg. 17,673, 17,681 (DEA 2011).

The applicable standards under California law may be found in various provisions of the California Business and Professional Code as well as the California Health and Safety Code. Mirroring federal law in substantial part, California law provides that:

> [a] prescription for a controlled substance shall only be issued for a legitimate medical purpose by an individual practitioner acting in the usual course of his or her professional practice. The responsibility for the proper prescribing and dispensing of controlled substances is upon the prescribing practitioner, but a corresponding responsibility rests with the pharmacist who fills the prescription.

Cal. Health & Safety Code § 11153(a). Except as authorized by Cal. Bus. & Prof. Code § 2241,[30] ''no person shall prescribe for, or administer, or dispense a controlled substance to, an addict, or to any person representing himself or herself as such. * * *'' Cal. Health & Safety code § 11156(a).

Additionally, state law ''governing licentiates of the Osteopathic Medical Board of California is found in the Osteopathic Act and in Chapter 5 of Division 2, relating to medicine.'' Cal. Bus. & Prof. Code § 3600. Relevant provisions of Chapter 5 include: ''Prescribing, dispensing, or furnishing dangerous drugs[31] * * * without an appropriate prior examination and a medical indication, constitutes unprofessional conduct.'' *Id.* § 2242(a). ''A physician * * * may prescribe * * * prescription drugs * * * to an addict for purposes of maintenance [or] detoxification. * * *'' only as set forth pursuant to specified provisions of law limiting continuing treatment to programs licensed by California. *Id.* § 2441(b); Cal. Health & Safety Code § 11217. This requirement does not apply ''during emergency treatment, or where the patient's addiction is complicated by the presence of incurable disease, serious accident, or injury, or the infirmities of old age.'' Cal. Health & Safety Code § 11217(h).

Turning to the evidence in the instant case, the testimony and written report of the Government's medical expert, Dr. Gagné, centered on a file review for patients [D.A.], [L.G.], [R.G.H.], [A.L.], [L.M.], [K.P.], [D.S.], [A.W.] and [T.W.].[32] With regard to patient [D.A.], Dr. Gagné noted in his report that the medical file consisting of five pages arguably ''establishes the minimal documentation necessary to treat a medical problem,'' but also noted the ''record omits the detail necessary to form a medical diagnosis, and there is no basis for the diagnosis stated.'' (Gov't Ex. 3 at 2.) Dr. Gagné further noted that the ''standard of practice for patient records is to document all important aspects of the patient encounter, including: History, current medications, physical examination, tests, assessment, and plan.'' (*Id.*) Based on a review of [D.A.]'s medical record, Dr. Gagné found

[27] No further evidence or testimony was offered with regard to the status or outcome of the state review.

[28] Testimony at hearing revealed that the process for selecting nine of Respondent's patient files began with the seizure of approximately seventy patient files pursuant to a search warrant, all of which were ''individuals that were known to have been either drug dealers or drug abusers and their associates.'' (Tr. 287.) A California Medical Board Investigator then selected the files to be reviewed by Dr. Gagné based on the ''file structure'' and the fact that the ''files appeared to be incomplete.'' (Tr. 287.)

[29] As discussed below, however, not every prescription for controlled substance that Respondent issued is associated with an office visit.

[30] § 2241 authorizes a practitioner to ''prescribe, dispense, or administer'' controlled substances to an addict ''for a purpose other than maintenance on, or detoxification from'' controlled substances. Moreover, ''a person whose drug-seeking behavior is primarily due to the inadequate control of pain is not an addict. * * *'' Cal. Health & Safety Code § 11156(b)(2).

[31] ''Dangerous drugs'' are broadly defined to include any ''drug * * * that by federal or state law can be lawfully dispensed only on prescription. * * *'' Cal. Bus. & Prof. Code § 4022.

[32] To protect patient privacy, patient initials are used in this Recommended Decision.

the ''record contains many of these elements in skeletal form,'' and further noted as a ''glaring omission'' with regard to Respondent's authorization of medicinal cannabis ''the absence of a psychiatric or addiction history or any notation as to the patient's response to cannabis to date.'' (*Id.* at 3.) Dr. Gagné also noted the prescription for a large quantity of OxyContin to be ''an extreme deviation from the standard of practice, as is the absence of an adequate evaluation to support such a prescription on a medical basis.'' (Gov't Ex. 3 at 2–3; Gov't Ex. 8 at 5.)

Consistent with his written report, Dr. Gagné testified at hearing that in his opinion Respondent prescribed controlled substances to patient [D.A.] without a legitimate medical purpose and outside of the usual course of professional practice because there was an inadequate medical evaluation. (Tr. 79–80.) Dr. Gagné explained that it is outside of the usual course of professional practice to prescribe OxyContin without an appointment and without a treatment plan or some basis for issuing the prescription, which were lacking here. (Tr. 74–75.) Respondent's prescription for 180 OxyContin 40 mg was dated January 7, 2007, but the patient file contains no record of an office visit on that day, which occurred approximately four weeks after the previous appointment. (Tr. 74; Gov't Ex. 3 at 2.) Dr. Gagné indicated that ''[t]here may be a medical purpose for prescribing OxyContin (chronic pain), but the record is completely inadequate as to why this is needed rather than a less dangerous alternative.'' (Gov't Ex. 3 at 2.) Dr. Gagné further opined that there is no documented basis, such as an MRI or CT scan report, to support Respondent's diagnosis of annular tears in lumbar disks; without a basis for diagnosis there can be no basis for treatment. (Tr. 72–73.)

On cross-examination, Dr. Gagné elaborated on the level of detail required for a medical history and physical examination, noting that ''best practice is different from the standard practice, and it's different from the minimal standard one must meet in order to prescribe any treatment appropriately.'' (Tr. 212.)

Respondent testified in substance that he initially saw patient [D.A.] on the evening of December 6, 2006, for a cannabis recommendation, and on January 3, 2007, for a pain management visit. (Tr. 345, 351.) Respondent indicated his practice was to see four or five cannabis recommendation patients two evenings per week, and if the patient requested to establish treatment with Respondent on an ongoing basis, the patient would be required to make another appointment during the day. (Tr. 345.) Respondent explained that he was able to determine that patient [D.A.] had ''annular tears'' by experience rather than with imaging such as an MRI. (Tr. 346–47.) In sharp contrast, Dr. Gagné testified that an ''annular tear is a finding that one would obtain on imaging, probably an MRI or a CT scan, and no imaging was present in this file.'' (Tr. 73.) Respondent further explained his ability to diagnose ''annular tears'' from a variety of physical examination tests he performed, stating that the reason none of the tests were documented in the file was due to ''bouts of epicondylitis in my right elbow'' that limited his writing ability, among other reasons. (Tr. 348.) Somewhat inconsistently, Respondent also testified that he has ''had five of my charts reviewed by the University of California Davis, and they had no problems with what I was doing.'' (Tr. 349.) Respondent agreed with Dr. Gagné insofar as the prescription dated January 3, 2007, did not have a corresponding chart entry associated with it. (Tr. 352.) Respondent testified that he prepared a chart ''every single time,'' but testified to the possibility the file was incomplete because of a staff error. (*Id.*)

With regard to patient [D.A.], I do not find Respondent's testimony fully credible, particularly given Dr. Gagné's credible testimony that diagnosis of an annular tear would require imaging. Respondent's attempt to justify his findings based on ''experience'' and ''testing'' finds no objective support in the medical file or other record evidence. To the contrary, other patient files in this record contradict Respondent's assertion that he prepares a patient chart ''every single time.'' I accept Dr. Gagné's findings and opinions regarding Respondent's deviations from the standard of care for [D.A.], as described above, which are well supported and consistent with the evidence of record.

In the case of patient [L.G.], Dr. Gagné noted in his report a medical file consisting of approximately 126 pages, commenting that ''this is an average sort of workup for a primary care physician treating a pain problem,'' but noted a number of blank pain management forms and concluded that the ''physical examination is completely inadequate.'' (Gov't Ex. 3 at 4.) Dr. Gagné noted that ''immediately starting the patient on a high-dose OxyContin is extremely inappropriate without more information.'' (*Id.*) Dr. Gagné concluded that the medical records for patient [L.G.] are a ''substantial departure from the standard of practice,'' further characterizing the departure as a difficult choice between ''simple and extreme departures'' but ultimately characterizing it as a simple departure.[33] Finally, Dr. Gagné opined that Respondent's ''[p]rescribing controlled drugs (including opiates) to an addict [and] [p]rescribing sedating drugs to someone having recurrent falls and automobile accidents and altered mental status, presumably due to the drugs being prescribed'' was an extreme departure from the standard of care. (Gov't Ex. 3 at 9.)

Dr. Gagné testified consistent with his report, stating that in his opinion prescribing controlled substances to patient [L.G.] ''was inappropriate, it was without a medical basis, it was somebody having recurring problems as a result of the substances, falls and automobile accidents, and there was no medical basis.'' (Tr. 108.) Dr. Gagné further testified that ''[i]t was clear from the medical record'' that [L.G.] was a drug addict. (Tr. 82.) [L.G.]'s urine toxicology screen showed drugs of abuse. (Tr. 83.) In particular, the patient file indicates that [L.G.] tested positive for methamphetamine, opiates, oxycodone and amphetamines even though a review of the patient file reveals the patient was not being prescribed amphetamine or methamphetamine. (Tr. 98; *See* Gov't Ex. 9 at 4–5.)[34] Despite the evidence of drug addiction or drug abuse, Respondent did not take an addiction history for [L.G.] (Tr. 82.) And on February 20, 2008, the same day [L.G.] tested positive for methamphetamine and amphetamines, for which the patient lacked a prescription, Respondent issued a prescription for OxyContin, Roxicodone and an anti-inflammatory drug at the same levels the patient had previously been receiving. (Tr. 98–99.) Dr. Gagné testified that Respondent therefore acted inappropriately, because the patient's positive test results for methamphetamine and amphetamines should have been ''the type of red flag that is a full stop, meaning that one

[33] While not relevant to Respondent's prescribing practices, Dr. Gagné characterized Respondent's failure to evaluate, treat or refer patient [L.G.] to a psychiatrist regarding [L.G.]'s depression as a simple departure. (Gov't Ex. 3 at 9.)

[34] Although the transcript reflects that Dr. Gagné referred to Government Exhibit 8, that file does not relate to patient [L.G.] and the pages referenced are inconsistent with a toxicology report. (*See* Gov't Ex. 8 at 4–5 (patient file for [D.A.]).) Under the circumstances it seems more likely that Dr. Gagné intended to identify Government Exhibit 9. *See* Gov't Br. at 6 n.4 (acknowledging that Government failed to correct misstatement at hearing).

must stop providing controlled drugs and reevaluate the situation.'' (Tr. 99.)

Respondent testified that the pages of the medical chart for [L.G.] were not in the usual order but recalls first treating [L.G.] in December 2006. (Tr. 357.) Respondent acknowledged that he began a practice of urine drug testing toward the end of [L.G.]'s treatment, and that was when he first discovered improper drug use based on a positive test for methamphetamine, opiates, oxycodone and amphetamines. (Tr. 368; Gov't Ex. 9 at 4.) Respondent stated his intent was to refer [L.G.] to counseling and treat the patient's pain (Tr. 370) but that stopping the opioids immediately would have caused withdrawal. (Tr. 371.) A February 20, 2008 follow-up consult report states: ''Patient took methamphetamine in her coffee a few days ago. She hasn't injected. She does it once to twice a week.'' (Gov't Ex. 9 at 32.) Notwithstanding this information, Respondent continued to prescribe controlled substances to [L.G.] until August 14, 2008. (Tr. 371.) Respondent further explained that between 2005 and 2008 he was on ''a learning curve'' and by 2008 ''I was getting much better at it. * * *'' (Tr. 373.) Respondent also testified that he did not treat [L.G.]'s depression with antidepressants, stating that ''I'm not sure why I didn't do that at the time.'' (Tr. 374.)

I find Respondent's testimony with regard to patient [L.G.] not entirely credible insofar as he maintains his practice was getting much better by 2008. There is simply no credible evidence of record reflecting substantial improvement in Respondent's prescribing practices and compliance with applicable law. Additionally, Respondent's explanations that he intended to both refer [L.G.] to counseling and treat her pain is not credible. There is no evidence that a referral was made or any meaningful follow-up in that regard by Respondent. The testimony of Dr. Gagné, supported by [L.G.]'s patient file, reflects a prescribing pattern that is a substantial departure from the standard of care under federal and state law. Dr. Gagné's opinion that Respondent's conduct with regard to ''[p]rescribing controlled drugs (including opiates) to an addict [and] [p]rescribing sedating drugs to someone having recurrent fall * * *, '' among other issues, constituted an extreme departure from the standard of care, is fully supported by the objective evidence of record.

The medical chart pertaining to patient [R.G.H.] consisted of approximately seventy-seven pages. Dr. Gagné commented that the documentation on the first visit of February 22, 2007, ''fills in all the blanks'' but ''is skeletal and grossly inadequate.'' (Gov't Ex. 3 at 9.) Dr. Gagné documented his review of a series of ongoing office visits by patient [R.G.H.] with Respondent from March 2007 to August 2008, concluding that Respondent had engaged in a number of extreme departures from the standard of care, to include inadequate medical records, prescribing controlled drugs (opiates) to an addict and using opiates with an inadequate evaluation or consideration of therapeutic alternatives. (*Id.* at 12.)

Dr. Gagné testified that [R.G.H.]'s patient file reflected a number of prescriptions for controlled substances for which there was no corresponding appointment with Respondent. (Tr. 112–117.) Dr. Gagné was of the opinion that Respondent's issuance of prescriptions without a corresponding appointment ''was highly inappropriate and without a medical purpose.'' (Tr. 118.) Additionally, the patient file for [R.G.H.] included an undated notation indicating positive for ''Ecstasy'', ''Amph'', Methamph'', ''Benzo'' and ''Methadone.'' (Gov't Ex. 10 at 1.) There is no other record evidence in the patient file further explaining the note, other than a July 9, 2008 follow-up treatment report noting: ''Diversion: States [R.G.H.] is not diverting?'' (*Id.* at 14) and a July 22, 2008 report noting: ''Diversion: Possibly.'' (*Id.* at 13.) Dr. Gagné also testified in substance that [R.G.H.] clearly became addicted to powerful controlled substances and Respondent continued to prescribe controlled substances for [R.G.H.] after the addiction became apparent. (Tr. 110.) Dr. Gagné testified to a number of ''red flags'' in the patient file suggestive of diversion or addiction. (*See* Tr. 110.)

Respondent testified that he initially saw [R.G.H.] on an unscheduled visit while [R.G.H.] was with [R.G.H.]'s mother, for a non-pain management matter, and Respondent referred [R.G.H.] to a specialist for treatment. (Tr. 376–77.) Respondent testified he next saw [R.G.H.] for a pain management appointment on February 22, 2007, when he diagnosed [R.G.H.] with ''lumbar disc problems from a motor vehicle accident.'' (Tr. 378.) Respondent testified to prescribing various controlled substances to [R.G.H.] at the initial appointment, as well as follow-up appointments, but was uncertain at various points in his testimony as to actions taken because of a lack of information in the chart. For example, when asked why he did not continue to prescribe Soma on a follow-up visit, Respondent indicated ''I'm not sure,'' further testifying that he would not ordinarily put information in a patient's chart if medication was reduced, and ''sometimes'' put a note in the chart for an increase. (Tr. 380.) When asked why he added Actiq during an April 24, 2007 follow-up appointment, Respondent testified that it was ''probably for breakthrough pain,'' and further explained that the only time he would prescribe Actiq was for ''breakthrough pain or migraine headaches.'' (Tr. 381–82.)

Respondent's testimony with regard to prescribing Actiq is inconsistent with his follow-up chart for the April 24, 2007 appointment. (Gov't Ex. 10 at 26–27.) There is no reference to ''migraine headaches'' other than a note in the history section indicating [R.G.H.] went to the emergency room after ''feeling really tired, sick, headache, etc.'' (*Id.* at 26.) Similarly, there is no reference in the chart to the addition of Actiq, nor any reference to problems with breakthrough pain. To the contrary, the pain scale is circled in the ''moderate'' pain category. (*Id.*) In fact the ''Interval History'' form bearing a signature consistent with [R.G.H.]'s name for the date of the appointment describes how [R.G.H.] has been doing since the last appointment which [R.G.H.] marks as ''same.'' (*Id.* at 27.) Respondent's explanation for prescribing Actiq to [R.G.H.] is simply not credible.

Respondent next testified to believing that [R.G.H.] was ''using * * * and diverting'' controlled substances, stating ''I was prescribing OxyContin to her, and she was obviously not taking it since it wasn't in her urine.'' (Tr. 384.) Respondent initially testified he did not know when [R.G.H.] was tested because a lot of things ''are missing from this chart possibly because they were friends,'' further explaining that [R.G.H.] was friends with members of Respondent's staff. Respondent's testimony suggested that his medical assistant had taken documents out of the chart, but in the same sentence Respondent said he ''was not sure'' and had ''no way of knowing it.'' (Tr. 385.) Moreover, somewhat inconsistent with his initial statement that he did not know when [R.G.H.] was tested, Respondent next testified based on his chart notes of July 22, 2008, that he was aware of the urine test results on that date and refilled [R.G.H.]'s medications, elaborating that ''I only refilled it one time'' which would be within the thirty-day discharge period for a patient. (Tr. 386)

I find Respondent's testimony that he only refilled [R.G.H.]'s prescription for controlled substances one time on July 22, 2008, and subsequently discharged [R.G.H.], palpably not credible. The

unequivocal evidence of record reflects that rather than discharge [R.G.H.], Respondent continued to treat and refill [R.G.H.]'s prescriptions for controlled substances on August 6 and August 20, 2008, even though he knew [R.G.H.] was ''using and diverting.'' (Gov't Ex. 10 at 12, 34.) Dr. Gagné found the August 6 and August 20, 2008 prescriptions concerning and opined that they were issued outside the scope of usual professional practice in light of the patient's acknowledged addiction. (Tr. 123.) He observed:

> Having someone self-identify as an addict and be referred to addiction treatment produces an absolute contraindication to provision of any controlled drug whatsoever unless one is working with the diversion—or the addiction treatment program and does so under their direction. So you would need to have close coordination of care. And there's no evidence that any discussion was had with anybody else about her addiction.

(Tr. 122.) Dr. Gagné opined that Respondent's controlled substances prescriptions were without medical foundation or basis and constituted prescribing to an addict. (Tr. 123.) I accept the findings and opinions of Dr. Gagné as noted above, which are well supported and consistent with other credible evidence of record.

Turning next to the medical chart of patient [A.L.], Dr. Gagné noted in his report that it consisted of approximately fifty-four pages covering the time period from June to December 2006. (Gov't Ex. 3 at 12.) Dr. Gagné noted that the initial visit resulted in a prescription dated June 22, 2006, for ''180 OxyContin 80mg, 120 Actiq 1600 mcg, and 60 10-mg Valium'' along with another prescription with the same date for ''another 120 Actiq 1600 mcg and sixty Valium.'' (*Id.*) Dr. Gagné further commented that ''[t]his is an enormous amount of medication and constitutes overprescribing on its face.'' (*Id.* at 13.) A comparative review of the two June 22, 2006 prescriptions from the patient file reveals that one bears in capital letters the word ''VOID,'' as well as a line through it, indicating that only one prescription was actually issued. (Gov't Ex. 11 at 23–24.) Accordingly, I give no weight to Dr. Gagné's specific finding of overprescribing on its face.

In his report, Dr. Gagné also commented that the ''initial two visits are an extreme example of form without content,'' noting ''no good-faith attempt to obtain an adequate history, evaluate for possible addiction, detail precise symptoms, determine neurologic status, or perform an adequate physical evaluation.'' (*Id.*) After reviewing chart information for patient [A.L.] surrounding a September 20, 2006 follow-up visit, Dr. Gagné commented that this ''has now become bizarre,'' noting in part that the file contained a Controlled Substance Utilization Review & Evaluation System (CURES) report dated September 5, 2006, showing another doctor was prescribing to [A.L.] 90 OxyContin 80 mg once a month from March 22 to July 21, 2006. Dr. Gagné referenced a final office visit dated December 14, 2006, in which the patient chart for [A.L.] contains a notation from Respondent regarding the patient's abuse of drugs and medications, stating

> I am upset and really let him know it. He kept making excuses. And I stopped the excuses. I will fill his meds, have him come back in a month. He has to come back with a drug treatment facility—phone number, etc., then I may discharge. I will make that decision next time.

(*Id.* at 14; *see* Gov't Ex. 11 at 25.)[35]

Consistent with his written report, Dr. Gagné's testimony emphasized that Respondent's prescribing of controlled substances to [A.L.] was not in the context of a good-faith physician-patient relationship, there was no medical purpose served and the prescriptions were not issued in the usual course of professional practice. (Tr. 137.) In support of this conclusion, Dr. Gagné explained that [A.L.] tested positive for metabolites of methadone, Soma, marijuana and benzodiazepines, based on a specimen given November 16, 2006, and a report printed November 21, 2006. (Gov't Ex. 11 at 48–53; Tr. 130–33.) The patient file contains a printed toxicology report containing a handwritten notation indicating that ''Benzo prescribed—last time was August,'' which Dr. Gagné interpreted as referring to three months before [A.L.] underwent the drug test. (Gov't Ex. 11 at 53; *see* Tr. 130–31.) Dr. Gagné further testified that although this handwritten comment did not raise any concerns because it can be appropriate for patients to take medication intermittently, three other handwritten comments are concerning. (Tr. 131.) The toxicology report reflects a handwritten notation next to ''methadone'' stating ''Not Prescribed by me—stated a Family Member Gave to Him;'' next to Carisoprodol, a note appears stating ''not Prescribed;'' next to Cannabinoids, a note states ''not Prescribed or Made Legal.'' (Gov't Ex. 11 at 53; *see* Tr. 131.)

Dr. Gagné further testified that these notes ''confirm[ ] that we have a problem here'' with respect to Respondent's prescribing practices. (Tr. 131.) Respondent received [A.L.]'s toxicology report at least as early as December 14, 2006 (Gov't Ex. 11 at 48; Tr. 132), confronted the patient about [A.L.]'s abusive drug habits (Gov't Ex. 11 at 25; Tr. 133), but nevertheless prescribed to [A.L.] 240 OxyContin 80 mg and 90 Roxicodone 30 mg on that day (Gov't Ex. 11 at 46; Tr. 132). Dr. Gagné testified that Respondent issued the December 14, 2006 prescriptions outside the usual course of professional practice in light of ''evidence that the patient is not only abusing drugs but has additional sources of opiates.'' (Tr. 134.)

Respondent testified with varying levels of certainty and specificity with regard to his prescribing practices for patient [A.L.] (Tr. 387–395.) For example, when asked why there was a discrepancy in the chart as to an initial visit date of June 22, 2006, but a medication agreement was dated June 26, Respondent replied ''I don't know.'' (Tr. 394.) In terms of specifics of what he might do differently in the future, Respondent testified ''I think I'd be better educated in abuse * * *'' (Tr. 395.) As to the issue of diversion, Respondent testified that ''I noticed that he was either using or diverting. And we got a CURES Report that showed that * * * [A.L.] was discharged within six or so visits as well, but there's no discharge letter in this chart. And I know for a fact he was discharged. I know he was discharged.'' (Tr. 393.) But the evidence contradicts Respondent's testimony. The evidence reflects that after the September 5, 2006 CURES report which Respondent acknowledges as confirmation of ''using or diverting,'' Respondent continued to prescribe controlled substances on four additional occasions.[36] Additionally, contrary to Respondent's testimony that [A.L.] was discharged, a phone message note in [A.L.]'s chart dated January 17, 2007, states: ''[A.L.] need his oxy. All the paperwork you asked for. Per Dr. B 1/17/07 just bring in paperwork will speak to rehab place 1st before meds are given.'' (Gov't Ex. 11 at 22.) This note directly contradicts Respondent's assertion that [A.L.] had been discharged.

For the foregoing reasons, I find Respondent's testimony with regard to patient [A.L.] not credible. Dr. Gagné's conclusions and opinion of extreme deviations in Respondent's compliance with the standard of care as to patient [A.L.] pertaining to the absence of a good-faith medical evaluation prior to prescribing controlled drugs, prescribing controlled drugs to someone

[35] I give no weight to Dr. Gagné's reference in his written report to Respondent's credibility. (Gov't Ex. 3 at 14.)

[36] September 20, October 20, November 16 and December 14, 2006. (Gov't Ex. 11 at 32, 28 & 25.)

Respondent knew or should have known was an addict and prescribing controlled drugs without a legitimate medical purpose, are fully consistent with the objective evidence of record. I also accept Dr. Gagné's opinion as to a ''simple deviation for the standard of practice'' as it pertains to [A.L.]'s medical records. (Gov't Ex. 3 at 14.)

With regard to patient [L.M.], the patient chart consisted of sixty-three pages covering the period from July 2006 to April 2007. Dr. Gagné testified that based on his review of the chart, ''medications were not given in a good-faith manner or for a legitimate medical purpose.'' (Tr. 139.) Dr. Gagné noted in his report that the initial July 12, 2006 consultation note indicated: ''diagnosis is 'chronic pain from fractured ankle,' and the treatment two OxyContin 80 mg every 12 hours and two Norco 10/325 three times a day.'' (Gov't Ex. 3 at 15.) Dr. Gagné commented that the chart did not ''qualify as a good-faith medical evaluation'' and there was no basis for prescribing large quantities of opiates.'' (*Id.*) Of note, Dr. Gagné stated ''[c]ertainly the dose of opiates provided would be fatal in an opiate-naïve patient.'' (*Id.*) In summary, Dr. Gagné found the overall chart contained ''elements of the history and physical exam'' but there was ''no meaningful content,'' and therefore ''the records themselves reflect a simple deviation from the standard of practice.'' (*Id.* at 17.) Additionally, Dr. Gagné found extreme deviations from the standard of practice given the absence of a good-faith medical evaluation prior to prescribing controlled drugs, prescribing controlled drugs without legitimate medical purpose and overprescribing much larger doses of opiates than was indicated clinically. (*Id.*)

Respondent testified that he could not explain the absence from the chart of items such as past medical history, review of alcohol or drug abuse, and work history. (Tr. 395–96.) Respondent stated he would ordinarily gather that information. Respondent explained that he was deceived by patients, but doing better now, ''although I'm not seeing any pain management patients * * *.'' (Tr. 397.) Respondent further testified that if given a DEA registration, he would never again prescribe OxyContin but was unsure if he would engage in pain management. (Tr. 398.) Respondent testified that he believes he first discovered [L.M.] was engaging in duplicitous conduct ''when we got the CURES Report.'' (Tr. 398.) Respondent next stated the ''patient was discharged as well'' but ''believed [L.M.] was discharged soon after * * *.'' the urine test and CURES report. (Tr. 399.) In contrast, Respondent testified on cross-examination that he did not know when he received the CURES report, claiming he did not see the report or ''it wasn't in the chart until later.'' (Tr. 460.)

The patient file for [L.M.] contains a CURES report dated September 22, 2006, bearing a handwritten notation consistent with the word ''file.'' (Gov't Ex. 12 at 56.) [37] A review of [L.M.]'s chart reveals no other reference to receipt of the CURES report.[38] Contrary to Respondent's testimony, [L.M.] was not discharged. Rather, Respondent continued to prescribe controlled substances on successive follow-up visits dated: October 20, 2006; November 17, 2006; December 15, 2006; January 11, 2007; January 30, 2007; and February 28, 2007. (Gov't Ex. 12 at 23–33.) In fact, the chart contains a ''communication log'' dated April 24 to 27, 2007, confirming conversations consistent with notations by a staff member in Respondent's office, indicating [L.M.] was ''asking for refill of Oxyfast was told had to ask Dr., come back tomorrow.'' (*Id.* at 15.) A subsequent entry reflects [L.M.] ''came back in late p.m. advised per doctor needs to have drug screen 1st before new RX,'' to which [L.M.] questioned the need, stated [L.M.] was unable to provide a urine sample and indicated an intention to return the next day. (Gov't Ex. 12 at 15.) The entry the next day indicated [L.M.] ''never returned.'' (Gov't Ex. 12 at 15.) [L.M.]'s return to Respondent's office in April of 2007 for a ''refill'' is inconsistent with Respondent's assertion that [L.M.] had been discharged, at any time. Clearly, [L.M.] did not believe [L.M.] had been discharged and the chart notations suggest that Respondent had not discharged [L.M.], which if true would have precluded the necessity of a urine screen.

Accordingly, I find Respondent's testimony with regard to [L.M.] not credible based in part on various factual inconsistencies, as well has his numerous non-responsive and evasive answers to questions posed on both direct and cross-examination. (*See* Tr. 396–99; 457–60.) I accept Dr. Gagné's findings and opinions regarding Respondent's deviations from the standard of care for [L.M.], as described above, which are well supported and consistent with the evidence of record.

The evidence and testimony pertaining to patient [K.P.] included a patient chart consisting of forty-one pages covering the time period January to July 2007. The patient chart includes prescriptions for various controlled substances dated: January 11, 2007; February 8, 2007; February 15, 2007; February 16, 2007; March 6, 2007 (''to pick up on March 14''); March 6, 2007; March 30, 2007; April 20, 2007; April 30, 2007; May 16, 2007; June 8, 2007; June 18, 2007; July 3, 2007; July 12, 2007; and July 12, 2007. (Gov't Ex. 13 at 24–38.) The patient chart reflects an initial consultation report dated January 11, 2007, with follow-up reports dated: February 8, 2007; March 6, 2007; March 30, 2007; May 16, 2007; June 8, 2007; June 19, 2007; and July 5, 2007. (*Id.* at 5–15.)

Dr. Gagné commented in his written report that based on chart documentation relating to the initial January 11, 2007 consultation,

> the information in this visit constitutes an inadequate basis for treating any disease or condition and does not in my view reflect a good-faith medical evaluation. There is no real diagnosis and no basis for a diagnosis of ''annular tears.'' [39] The amount of medication prescribed is egregious: 750 mg/day of oxycodone. Finally, there is no information in the chart from any other physician, including the doctor who presumably referred the patient.

(Gov't Ex. 3 at 18.) The chart information for the February 8, 2007 follow-up visit reflects an increase in medication at the request of [K.P.], noting ''pt would like to ↑ oxy to #240'' (Gov't Ex. 13 at 13.) A corresponding prescription ''dated 2/8/07 is for 240 OxyContin 80 mg (taken as four every 12 hours) and 240 Roxicodone 30 mg, for a total of 1,200 mg daily.'' (*Id.*) The evidence also reflects two additional prescriptions issued to [K.P.] on February 15 and 16, 2007, with no associated clinic note present in the chart. (*Id.* at 35–36.) Dr. Gagné noted the prescription dated ''2/15/07 is for 150 Actiq 1600 mcg * * * and ten 100-mcg/hour fentanyl patches [and] yet another prescription on 2/16/07 is for another sixty OxyContin.'' (Gov't Ex. 3 at 18.) Dr. Gagné commented in his report that there ''is no legitimate medical purpose for this medication. Anyone who actually took this much would be at risk

[37] The CURES Report is dated September 22, 2006 and reflects various prescriptions for [L.M.] between March 30, 2006 and August 10, 2006, listing four other prescribers in addition to Respondent.

[38] A urine drug screen report for [L.M.] is dated November 22, 2006. (Gov't Ex. 11 at 54.)

[39] The January 11, 2007 consult chart reflects ''current medications Dose/Freq'' as ''OxyContin 80 x 180;'' ''Roxicodone 30 x 540.'' (Gov't Ex. 13 at 15.) This quantity reflected [K.P.]'s self-reported current medications which Respondent recorded. (Tr. 460.) Dr. Gagné noted in his report that this would reflect a daily dose of 1020 mg of oxycodone, which would be a ''staggering dose'' if accurate. (Gov't Ex. 3 at 17.)

for extreme opiate side effects, including seizure and death.'' (*Id.*)

Consistent with his report, Dr. Gagné testified that the indication in [K.P.]'s patient file that the patient was receiving 540 Roxicodone 30 mg from another doctor constitutes a ''huge red flag full stop * * * when you see something like that, you can't prescribe controlled drugs until you sort out what's going on.'' (Tr. 162.) Dr. Gagné also noted that the patient file contains the notation ''Patient of Dr. [W.]'s,'' with no corresponding evidence that Respondent consulted with or obtained records from Dr. [W.] (Tr. 162–63.) The patient file also indicates that [K.P.] rated [K.P.]'s level of aerobic exercise as moderate, which raises a red flag because ''[i]t's inconsistent with somebody who has extreme pain requiring stupendous doses of opiates.'' (Tr. 163.) The patient file further reflects a notation by Respondent ''Need to do drug screen,'' but the record contains no evidence that a drug screen was performed and further reflects that Respondent later prescribed Roxicodone, fentanyl, Dilaudid and two prescriptions for OxyContin in July of 2007. (Tr. 163, 164.) To Dr. Gagné, this ''reinforces the impression that there's no legitimate medical purpose underway here.'' (Tr. 163–64.) Dr. Gagné further testified that Respondent's prescribing behavior with respect to [K.P.] was ''completely inconsistent'' with someone who is concerned that a person is diverting drugs. (Tr. 163.) Dr. Gagné opined that in prescribing to [K.P.] Respondent overlooked the high probability of diversion, lacked a good-faith medical evaluation and issued prescriptions outside the usual course of professional practice. (Tr. 165.)

Respondent testified in substance that [K.P.] came to him from Dr. [W.] who Respondent described as ''doing pain management in town, who I got a lot of patients from and who I discovered were abusing their medications. In fact, there's at least a handful of patients I reduced their medications significantly.'' (Tr. 401.) Respondent further testified regarding the current level of medication [K.P.] self-reported, stating this ''is what Dr. [W.] had a lot of patients on. And it is absurd.'' (Tr. 461.) Respondent could not explain the absence of records from Dr. [W.] in the patient chart, stating that ''most all my charts have records from Dr. [W.]'' (Tr. 401.) Respondent suggested that the absence of records were not due to a lack of request on his part, but due to staff problems in his office at the time. ''It was—it was a problem in the office that I had so much turnover between 2003 and 2007. You know how costly it is and how difficult it is to keep training new help. * * *'' (Tr. 403–04.) Respondent's knowledge that ''a lot'' of patients from Dr. [W.] were abusing their medications, and that Dr. [W.] was prescribing absurd amounts of medications, at a minimum should have caused Respondent to have a heightened level of scrutiny in the case of [K.P.] Instead, the patient chart is effectively devoid of any evidence that Respondent took any reasonable action to meet his ''responsibility for the proper prescribing * * * of controlled substances.''[40]

Respondent also testified with regard to dosage levels, stating that he first prescribes the medication and then over a three or four month period evaluates the patient's medical problems and determines if an increase or decrease is warranted. (Tr. 402.) That testimony is inconsistent with Respondent's treatment of [K.P.], because the objective chart information indicates Respondent increased [K.P.]'s medication less than thirty days from the initial consult visit, notably at the patient's request, rather than for a stated medical reason. In fact, on the ''Interval History'' form bearing [K.P.]'s signature for the February 8, 2007 appointment, which asks the patient to assess how the patient has been doing since the last visit with regard to back pain, [K.P.] notes ''same.'' (Gov't Ex. 13 at 14.)

Respondent also testified that he had gone through ''these records about a half dozen times'' and noticed ''yesterday'' that several signatures relating to prescriptions for [K.P.] were not his, apparently suggesting that people other than Respondent wrote the prescriptions. (Tr. 404–05.) Referring to page numbers of prescriptions contained in Government Exhibit 13, Respondent elaborated further on direct examination: ''The prescription on 38 is not my signature''; ''Page 34 is not my signature''; ''The one on page 31 is not my signature. I'm not sure about 29 * * * I can't really tell.'' (Tr. 405–06.) On cross-examination, Respondent presented conflicting testimony. Respondent acknowledged his signature with regard to most prescriptions,[41] but testified initially that ''34 looks like it's mine'' but later testified ''Looks like it's not mine.'' (Tr. 465, 466.) Directly contradicting his earlier testimony with regard to page twenty-nine, Respondent testified ''That appears to be mine.'' (Tr. 465.) Similarly, Respondent directly contradicted his earlier testimony with regard to page 38, testifying ''It's mine.'' (Tr. 467.) Respondent's testimony with regard to the questionable signatures for three other prescriptions was vague: ''This one I can't tell * * * I do not know'' (Tr. 466 (Page 31).); ''I'm not sure'' (*Id.* (Page 35).); ''I can't tell on that.'' (Tr. 467 (Page 37).)

I do not find credible Respondent's testimony suggesting that several signatures on prescriptions issued to [K.P.] may be forged. There is no objective evidence of record to support the suggestion that someone else forged Respondent's signature, and Respondent's conflicting testimony on something as fundamental as recognition of his own signature, particularly with regard to the prescriptions reproduced in Government Exhibit 13 at pages twenty-nine, thirty-four and thirty-eight, is plainly incredible. I also do not find credible Respondent's testimony suggesting his staff may have been at fault for the lack of follow-up or documentation in the patient chart. There is simply no evidence to support the assertion and Respondent's demonstrated lack of credibility in numerous specific portions of his testimony casts significant doubt on his entire testimony.

I accept Dr. Gagné's conclusions and opinion of extreme deviations in the standard of care for patient [K.P.] pertaining to Respondent's: Grossly inadequate medical records, including no visit at all for several prescriptions; prescribing of controlled drugs without a legitimate medical purpose; lack of a good-faith medical evaluation prior to prescribing controlled drugs; and overlooking of the high probability of diversion. (Gov't Ex. 3 at 19.) As to the last point, Respondent not only overlooked but in fact knowingly accepted a high probability of diversion by admittedly accepting what he agreed was an ''absurd'' level of dosing for [K.P.] (Tr. 461.)

I do not, however, accept Dr. Gagné's conclusion and opinion with regard to Respondent's ''prescribing controlled drugs to an addict or to someone he should have known was an addict.'' There is no reference in [K.P.]'s patient chart to drug use or addiction. Any opinion or conclusion in that regard by Dr. Gagné is mere speculation.[42]

[40] 21 C.F.R. § 1306.04(a).

[41] Page numbers referenced herein refer to page numbers on bottom center of Government Exhibit 13, consistent with the presentation of evidence at hearing. Respondent acknowledged his signature on pages twenty-four to thirty, thirty-three, thirty-six and thirty-eight. (Tr. 465–67.) No testimony was offered with regard to the March 30, 2007 prescription. (Gov't Ex.13, at 32.)

[42] Dr. Gagné also speculates that the ''only reason I can fathom for someone requesting all this medication is so [K.P.] can sell it,'' which notably

Continued

The evidence as to patient [D.S.] included a patient chart numbering thirty-one pages covering the time period from October 2007 to January 2008. The chart includes a ''Consultation'' note dated October 29, 2007, stating ''Pt was seen during cannibus nite [sic],'' with no other entries for history of present illness, current medications, physical exam or diagnosis, among other fields. (Gov't Ex. 14 at 31.) The patient chart also contains a copy of a prescription dated October 24, 2007 [43] for ''180 Norco 10/325 with two refills, 180 soma with two refills, and a pint of Phenergan with Codeine'' although there is no corresponding entry in the chart documenting a clinical visit consistent with the prescribed medication. (Gov't Ex. 3 at 20.) A follow-up report dated December 15, 2007, under ''History of Present Illness'' stated ''med refill'' and included a diagnosis of ''Lumbar disc degeneration, chronic pain, depression.'' (*Id.;* Gov't Ex. 14 at 30.) A copy of a prescription [44] dated December 15, 2007 is for 180 OxyContin 80 mg, 180 Norco 10/325, 180 soma, a pint of Phenergan with codeine, and 60 Zoloft 100 mg. (Gov't Ex. 3 at 20; *see* Gov't Ex. 14 at 2 & 25.)

The testimony and report by Dr. Gagné include findings and opinions as to extreme deviations from the standard of practice: Grossly inadequate medical records, including no visit at all when Respondent wrote one prescription; prescribing large quantities of dangerous, potentially lethal sedating medications to a depressed patient for whom no assessment was made for suicidal ideation or intent; absence of good-faith medical evaluation prior to prescribing controlled drugs; prescribing controlled drugs without a legitimate medical purpose; prescribing controlled drugs to an addict or to someone Respondent should have known was an addict; and overlooking a high probability of diversion. (Gov't Ex. 3 at 21.) Dr. Gagné testified in substance that Respondent prescribed ''large quantities of controlled drugs with multiple refills with no legitimate medical purpose.'' (Tr. 148, 154.) He also testified that Respondent's diagnosis of lumbar disc disease and chronic pain lacks a medical basis. (Tr. 148–49.)

Respondent testified in substance to first seeing [D.S.] on December 15, 2007, and said the patient ''was in for pain medications and cough and colds.'' (Tr. 408.) Respondent testified that he noted on [D.S.]'s chart ''that she doesn't have her pain managed'' but did not ''understand why'' he stated that. (*Id.*) Respondent then explained that he was ''really putting the history of present illness down'' noting that [D.S.] had injured [D.S.]'s back while lifting. (*Id.*) Respondent further explained that he diagnosed lumbar disc degeneration, chronic pain and depression, and ''I ordered an X-ray be done on her.'' (*Id.*) Inconsistent with Respondent's testimony, the corresponding chart does not reflect a contemporaneous order of an X-ray but rather includes a January 15, 2008 order for a ''Lumbar spine X-ray Multiview.'' (Gov't Ex. 14 at 26.)

By way of explanation for prescribing a three-month supply, Respondent testified: ''And then I gave her a three-month supply where she stated she was going to Texas to visit family. And I trusted that was the truth, and so I wrote it out for three months or enough for three months.'' (Tr. 409.) Respondent testified in substance that, other than [D.S.], he has not had a patient on an initial visit ask for a three-month supply, and even for longstanding patients it is ''not usually something that I normally do.'' (Tr. 411–12.) Respondent explained that in retrospect he would have questioned [D.S.] differently and ''I wouldn't prescribe it.'' (Tr. 412.) Respondent further acknowledged that with regard to his initial evaluation of [D.S.] ''there is room for improvement'' but never suspected at the time of [D.S.]'s first visit that [D.S.] was an addict or was diverting the medication. (*Id.*)

The evidence of record is consistent with Respondent's testimony that he normally does not prescribe a three-month supply. Respondent also testified that in January 2008 when [D.S.] came in on an unscheduled walk-in visit, [D.S.] was discharged. (Tr. 410.) A follow-up patient chart report is consistent with Respondent's testimony, reflecting in part a notation: ''No longer Seeing Patient. I think this patient has scammed me'' and another notation: ''Patient threatened me to have my license revoked.'' (Gov't Ex. 14 at 29.)

Although I find Respondent's testimony partially credible as noted above, there is no testimony or other evidence of record addressing in any way the October 24, 2007 prescription signed by Respondent, nor does any credible testimony or evidence rebut the findings of the only expert witness in the case, Dr. Gagné, concerning his findings and opinions of extreme deviations from the standard of practice for patient [D.S.] Accordingly, I accept the findings and opinions of Dr. Gagné pertaining to extreme deviations from the standard of practice as noted above, with the exception of Dr. Gagné's opinion that Respondent prescribed ''controlled drugs to an addict or to someone he should have known was an addict.'' (Gov't Ex. 3 at 21.) There is insufficient evidence of record to support such a finding as to patient [D.S.]

The patient record for [A.W.] included a patient chart numbering 205 pages covering the time period from November 2005 to August 2008. Dr. Gagné's initial findings and opinion regarding the prescribing practices for [A.W.] differed in some respects from his testimony at hearing. Dr. Gagné stated in his written report that he is ''of two minds about this case,'' noting at one point that Respondent ''treats the patient's symptoms without establishing a medical diagnosis,'' but also stating shortly thereafter ''I did feel the diagnoses at the initial visit of plantar fasciitis and possible facet arthropathy had some basis.'' (Gov't Ex. 3 at 24.) Dr. Gagné further stated in his report: ''I do not see overprescribing or sense the patient is abusing or diverting the medications.'' (*Id.*) Dr. Gagné's report also included a notation consistent with the foregoing, to include a review of records pertaining to [A.W.]'s January 2007 hospital admission, where Dr. Gagné noted: ''Chemistries are unremarkable, as is the urinalysis.'' (*Id.* at 22 (interpreting Gov't Ex. 15 at 189–205).)

On direct examination, Dr. Gagné testified in substance that although ''I had not spotted this in my initial review,'' there was a urine drug screen dated January 2007 that was positive for cocaine. (Tr. 181–82.) Dr. Gagné further testified in substance that this report was in the patient chart but Respondent ''had not ordered it * * * [so] we have no idea [if] it was something that he saw [but] I think there's plenty of evidence of doctor shopping and other aberrant medication behaviors.'' (Tr. 182.) Dr.

conflicts with his opinion as to addiction. (Gov't Ex. 3 at 18.) I give no weight to these comments as to [K.P.]'s specific intent. Intent aside, the evidence is fully consistent with a high probability of diversion.

[43] The date could arguably read October 29, 2007, coinciding with chart information of an office visit for ''cannabis night.'' (Gov't Ex. 14 at 24.) Further confusing the issue, Respondent's counsel asked Respondent to describe this patient ''when she presented in your office apparently October 27th, '07,'' to which Respondent replied in context stating that he first saw [D.S.] on December 15, 2007. (Tr. 408.) In any event, there is no supporting chart information for prescribing controlled substances on October 29, 2007. (*See* Gov't Ex. 14 at 31.)

[44] Notes related to the prescription reflect that Respondent prescribed a three-month supply because the patient stated ''she was going to Texas to see family & would not be back for 3 mo.'' (Gov't Ex. 14 at 30.) Dr. Gagné commented in his report that ''[g]iving someone who is depressed and possibly suicidal enough controlled and sedating medication to kill themselves and then planning not to see them for three months is extraordinarily poor care to say the least.'' (Gov't Ex. 3 at 20.)

Gagné's reference to ''plenty of evidence'' was a reference to other aspects of his testimony on direct examination that highlighted chart information inconsistent with prescribing for a legitimate medical purpose. For example, Dr. Gagné was of the opinion that Respondent issued various prescriptions for controlled substances for other than a legitimate medical purpose or outside the usual course of professional practice. (Tr. 170–78.) The patient record for [A.W.] reflects additional warning signs. Dr. Gagné testified that [A.W.]'s medical record in multiple instances contains evidence of phone calls from other clinics to the extent that [A.W.] ''has been getting pain medications referred by multiple physicians and three different pharmacies.'' (Tr. 179.) Upon specific questioning about an April 2006 chart note and a July 2008 letter, Dr. Gagné testified that ''this is clear-cut evidence of * * * doctor shopping.'' (Tr. 179; *see* Gov't Ex. 15 at 7 & 72.) Moreover, Dr. Gagné stated that a note by Respondent that ''History of Present Illness: She gives me very little information to obtain those records'' would ''absolutely'' give a practitioner cause for concern before prescribing opiates. (Tr. 180.) Additionally, [A.W.]'s patient file indicates that the patient requested—and Respondent denied—early refills. (Tr. 180.) Another yellow flag is an indication that the patient requested a brand name medication. (Tr. 180–81.) And significantly, a drug screen report also showed that [A.W.] tested positive for cocaine, and there is no evidence that Respondent discharged the patient for using illegal substances.[45] (Tr. 181–82.)

Respondent testified in substance with regard to [A.W.] that [A.W.] ''came to me from the other practice in central Fresno'' where Respondent believed a full history and physical had been conducted. (Tr. 414.) Respondent testified that he did not ''recall if I had [A.W.] on OxyContin from the other office or whether I just started treating [A.W.] then with OxyContin.'' (*Id.*) Respondent also testified that staff should have obtained prior records but did not, and acknowledged in retrospect that he should have done another history and physical examination. (*Id.*) Respondent testified that he never believed [A.W.] was drug seeking when he began treatment and never determined that [A.W.] was diverting. (Tr. 416; 421.) Respondent further testified that he does not consider therapeutic alternatives with every patient but does have a mission statement to ''use as many different modalities as possible to help the patient with pain.'' (Tr. 422.)

Respondent's testimony with regard to his knowledge of possible diversion by [A.W.] is not consistent with the objective evidence of record, as early as April 2006. Dr. Gagné testified that the January 2007 lab report finding [A.W.] positive for cocaine, and related chart information, does not indicate whether Respondent was aware of such a finding, particularly because it was not ordered by Respondent. Standing alone, the possibility of overlooking such a finding is not unreasonable, and in fact Dr. Gagné overlooked it in his initial file review. The same cannot be said for the April 2006 chart notation and the July 19, 2008 letter addressed to Respondent. The chart contains a prescription log bearing an entry dated April 10, 2006:

> Margie from central Valley Clinic called to inform us that patient is getting Valium, Lortab & Soma from their office. Also she says that patient uses Valium, Lortab & Soma from their office. Also she says that patient uses various pharmacies using different insurances to refill [A.W.]'s meds.

(Gov't Ex. 15 at 7.) A second entry dated April 19, 2006, states:

> Patient given a RX for [O]xy[C]ontin since we had to reschedule appt. [A.W.] was advise[d] to keep [A.W.]'s appt. This is the last Rx because [A.W.] will be discharged *per Dr. Brubaker.*

(*Id.* (emphasis added).)

Clearly Respondent was aware of diversion issues related to [A.W.] no later than April 19, 2006, because he had instructed his staff that [A.W.] was to be discharged. Notably, patient chart notes on and after April 10, 2006, make no reference to the known issue of diversion, or to discharge. To the contrary, a follow-up report dated July 11, 2006, notes in part ''No evidence of abuse * * * .'' (*Id.* at 139.) A letter addressed to Respondent from the pharmacy benefit manager Wellpoint Next Rx dated July 19, 2008, is further to the point, stating in relevant part: ''Our pharmacy claim records indicate that your patient listed above has had pain medications prescribed by you and at least 2 other physicians and have filled prescriptions in at least 3 different pharmacies in a 3-month period.'' (*Id.* at 72.) This evidence unequivocally contradicts Respondent's testimony suggesting he had no knowledge of diversion by [A.W.] Rather, the July 19, 2008 letter confirms [A.W.]'s ongoing diversion of controlled substances consistent with information known to Respondent in April 2006. As with other material portions of Respondent's testimony, I find Respondent's relatively brief testimony on this issue not credible.

Dr. Gagné concluded in his written report for patient [A.W.] that Respondent's medical records are ''a substantial departure from the standard of practice,'' further characterizing it as a simple rather than extreme departure. (Gov't Ex. 3 at 25.) Dr. Gagné also concluded that ''the final simple departure from the standard of practice is using opiates without consideration of therapeutic alternatives.'' (*Id.*) I accept the findings and opinions of Dr. Gagné with the exception of his opinion that there is no evidence of ''overprescribing'' or evidence that ''the patient is abusing or diverting the medications,'' as reflected in his written report. That finding is inconsistent with the objective chart information, as early as April 2006, and Dr. Gagné credibly testified that he had overlooked the information for purposes of his written report.

The evidence as to patient [T.W.] included a patient chart numbering forty-six pages covering the time period from September 2006 to January 2007. Dr. Gagné noted that the initial visit resulted in a diagnosis of chronic hip, back and leg pain from stress fracture and that Respondent's ''recommended treatment is 'herbal meds.' '' (*Id.* (citing Gov't Ex. 16 at 42).) The chart contains a corresponding prescription dated September 20, 2006, ''for 180 OxyContin 20 mg, three every 12 hours, 120 Norco 10/325, 1–2 every 4 hours as needed, and 90 Xanax 2 mg, one 3 times a day.'' (Gov't Ex. 16 at 39.) Dr. Gagné commented in his report that ''[t]here is no basis in this record for any but the most minimal treatment; there is certainly no legitimate medical purpose to prescribe such enormous quantities of opiates, which would be fatal in an opiate-naïve person.'' (Gov't Ex. 3 at 25; *see* Gov't Ex. 16 at 39.) The patient chart contains a November 1, 2006 prescription for ''120 Dilaudid 8 mg, 120 Norco 10/325, and 90 Xanax 2 mg,'' with no evidence of a corresponding clinic visit. (*See* Gov't Ex. 3 at 25.)

Dr. Gagné's report outlines additional visits by [T.W.] with corresponding controlled substances prescriptions, noting finally that a

[45] Moreover, Dr. Gagné testified that Respondent did not order the drug screen that there is no indication whether Respondent saw the drug screen report. (Tr. 182.) But because the drug screen report was in Respondent's patient file for [A.W.], I find that Respondent was on inquiry notice of the contents of the report, even if he did not possess actual knowledge of it. There is no indication that the drug screen report was added to the patient file after the file left Respondent's custody and control following the execution of a warrant at Respondent's registered location (*e.g.,* Tr. 324), and counsel for Respondent did not object to the report's admission at hearing. (Tr. 183.)

''Consultation'' note dated 1/31/07 is clearly not a patient visit: ''Discovered in the Fresno Bee [newspaper] that this patient has been selling drugs of abuse and [T.W.]'s pain meds and cannabis. This type of behavior ruins treatment for other patients. I hope [T.W.]'s put away for 10+ years. [T.W.] sure had me fooled. This patient has note in the computer now to never be seen again, ever.''

(*Id.* at 26 (citing Gov't Ex. 16 at 8).) Dr. Gagné's findings and opinion with regard to Respondent's standard of practice for [T.W.] included extreme departures in the following areas: grossly inadequate medical records, including no visit at all when Respondent wrote one prescription; absence of a good faith medical evaluation prior to prescribing controlled drugs; prescribing controlled drugs without a legitimate medical purpose; prescribing controlled drugs to an addict;[46] and overlooking a high probability of diversion. (*Id.* at 27; *see* Tr. 189.) Elaborating on his report, Dr. Gagné testified that [T.W.]'s patient file reflects that Respondent prescribed Dilaudid to [T.W.] on November 1, 2006, without an associated patient consultation, and without mention in the medical notes that Respondent wrote such a prescription. (Tr. 184–85.) Nor is there any mention of Dilaudid in contemporaneous patient notes. (Tr. 185.) Dr. Gagné opined that there is no record that would justify the prescription. (Tr. 185.) The record further reflects a significant increase in an OxyContin prescription from 20 mg, 180 count on September 20, 2006, to 80 mg, 300 count on November 21, 2006. (Tr. 186.) The record associated with [T.W.]'s November 21, 2006 doctor's appointment does not justify increasing the patient's OxyContin by that amount. (Tr. 186.) Dr. Gagné testified that the entire situation ''has a trolling-for-drugs quality.'' (Tr. 186.) Dr. Gagné further found it unusual that on the day Respondent increased the dose to 300 pills a month, Respondent wrote ''Stable on 5 OC two 12 H,'' because the patient was not yet taking that many pills. (Tr. 187.) Patient [T.W.]'s medical file also contains references to MRI and X-ray reports that are not contained in the patient's medical file. (Tr. 187.)

Respondent testified he initially saw [T.W.] on September 20, 2006, for a ''cannabis recommendation.'' (Tr. 424; Gov't Ex. 16 at 41.) Respondent further testified that he did not learn who was prescribing [T.W.]'s current medications, stating ''I don't really do that for cannabis recommendations.''[47] Respondent testified in substance that he normally handled cannabis recommendations at night, but after review of [T.W.]'s chart information testified that [T.W.] must have come in during the afternoon for a cannabis recommendation and pain management visit. (Tr. 426 & 435–36.) Respondent testified that during the initial consult with [T.W.] he prescribed the same medications [T.W.] had stated [T.W.] was already prescribed. (Tr. 427.) Respondent provided no credible explanation for the November 1, 2006 prescription that is not associated with a corresponding clinical visit, other than to refer to the November 21, 2006 note.[48] (Tr. 428.) Respondent testified consistent with the November 21, 2006 chart note that his plan was to have [T.W.] obtain an X-ray, adding: ''[T.W.] never did it, so I discharged [T.W.]'' (Tr. 428.) On the issue of suspecting [T.W.] may be diverting, Respondent testified: ''Intuitively I felt there was something wrong with this patient, and I couldn't in just a few visits really tell what—what [T.W.] was up to. But in retrospect, he was one of the patients that sold, along with one other patient that sold * * * .'' (Tr. 429.)

I do not find Respondent's testimony credible. Contrary to his assertion that he ''discharged'' [T.W.] because of lack of an X-ray following the November 21, 2006 appointment, the patient chart reflects a follow-up note dated January 15, 2007, stating in part ''Refill med Patient stable * * * Need to repeat CT scan * * * .'' (Gov't Ex. 16 at 9.) There is no credible evidence of record to support the suggestion that [T.W.] was discharged by Respondent at any point prior to the January 31, 2007 chart note indicating [T.W.] had been arrested for ''selling.''[49] Accordingly, I accept the findings and opinions of Dr. Gagné pertaining to extreme deviations from the standard of practice as noted above, which are well supported and consistent with other credible evidence of record.

In addition to the foregoing, Respondent also testified at various points that the nine patient files admitted as evidence may be incomplete, or may otherwise have been altered, but offered no credible evidence to support this suggestion.[50] Respondent suggested staff problems may have been the cause, but testified that ''overall I'm responsible because I'm the physician, owner of the practice; but when you have difficulties with staff, they can burn you, they can burn you bad.'' (Tr. 353.) I do not find credible Respondent's testimony suggesting that his files would have been complete but for staff neglect or tampering. As an initial matter, there is no objective evidence of record to support Respondent's claim. To the contrary, as discussed above, the objective record in numerous instances calls into question the accuracy of Respondent's chart entries, Respondent's testimony, or both.[51] Additionally, the overall credibility of Respondent's testimony was significantly undermined in numerous other material areas, making it less likely that Respondent's unsupported claims of tampering are true. In any event, Respondent is ultimately responsible for the proper prescribing and dispensing of controlled substances. 21 CFR § 1306.04.

Respondent also testified that he never received copies of the fifty to seventy files seized by the police in August 2008, and maintained that he was unaware the files had been returned to his attorney. (Tr. 325–26.) On the issue of seized files, DI Lewis testified that after the patient files were seized from Respondent pursuant to a search warrant, two copies were made and one ''copy of these records w[as] returned through [Respondent's] attorney at the time, and a second copy was provided to the Medical Board of California.'' (Tr.

[46] In support of this opinion, Dr. Gagné notes in his report [T.W.]'s self-reported ''huge marijuana habit'' which is ''telegraphing that he's an addict.'' (Gov't Ex. 3 at 26.)

[47] Respondent qualified his testimony, stating that he currently determines who is prescribing medications for a new patient, but was not doing so at the time of [T.W.]'s initial visit. (Tr. 424.)

[48] Reference to the November 21, 2006 chart note is irrelevant to the November 1, 2006 prescriptions, which precede the November 21, 2006 visit. In any event, there is another prescription for controlled substances associated with the November 21, 2006 visit. (*See* Gov't Ex. 16 at 36.)

[49] There is evidence of Respondent's lack of truthfulness with regard patient [T.W.] after January 31, 2007. Apparently following a telephone conversation with staff members of the facility detaining [T.W.], Respondent wrote a letter to ''Physician's at the Prison & His attorney'' stating in relevant part, ''I saw [T.W.] a few visits in my office where I prescribed [T.W.] [X]anax * * * for anxiety * * * wellbutrin * * * for ADHD * * * Norco 10/325 * * * .'' (Gov't Ex. 16 at 16; *see* Tr. 432.) On cross-examination Respondent stated he was confused and did not ''understand what was transpiring between the prison doctor and myself at this time.'' (Tr. 433.) Respondent admitted he wrote the letter and the statement as to prescribed medications was ''not a true statement.'' (*Id.*)

[50] For example, Respondent testified at one point that ''a lot of things, I think are missing from this chart possibly because they were friends. And the MA took it out and excluded it. I'm not sure. I have no way of knowing it.'' (Tr. 385.) Respondent also testified to a March 2007 theft of a computer containing prescription information. (Tr. 316–19.)

[51] *See, e.g.,* Tr. 73 (finding annular tears absent medical imaging); Tr. 394 (unexplained discrepancy in patient file as to initial visit date and medication agreement); Tr. 424 (recording ''current medications'' on patient representations alone, absent corroboration from other prescriber); Gov't Ex. 15 at 7, 139 (notations in chart of ''no evidence of abuse * * *'' when Respondent in fact did have such evidence).

289.) The issue of whether Respondent ever received copies of his patient files from his then-attorney is not directly relevant to the instant case, because it is undisputed that Respondent received copies of the patient files discussed herein well in advance of hearing.[52]

For the foregoing reasons, I find by substantial evidence that Respondent issued a substantial number of controlled substance prescriptions for other than a legitimate medical purpose and outside the usual course of professional practice, in violation of federal and state law.[53] This finding weighs heavily in favor of a finding under Factors Two and Four of 21 U.S.C. § 823(f) that Respondent's registration would be inconsistent with the public interest.

Factor 5: Such Other Conduct Which May Threaten the Public Health and Safety

Under Factor Five, the Deputy Administrator is authorized to consider ''other conduct which may threaten the public health and safety.'' 5 U.S.C. § 823(f)(5). The Agency has accordingly held that ''where a registrant has committed acts inconsistent with the public interest, the registrant must accept responsibility for his or her actions and demonstrate that he or she will not engage in future misconduct. *Patrick W. Stodola,* 74 Fed. Reg. 20,727, 20,734 (DEA 2009).[54] A ''[r]espondent's lack of candor and inconsistent explanations'' may serve as a basis for denial of a registration. *John Stanford Noell, M.D.,* 59 Fed. Reg. 47,359, 47,361 (DEA 1994). Additionally, ''[c]onsideration of the deterrent effect of a potential sanction is supported by the CSA's purpose of protecting the public interest.'' *Joseph Gaudio, M.D.,* 74 Fed. Reg. 10,083, 10,094 (DEA 2009).

There was evidence presented at hearing pertaining to ''other conduct which may threaten the public health and safety.'' 5 U.S.C. § 823(f)(5). The OSC alleges that Respondent was arrested for driving under the influence of controlled substances on June 13, 2008, and that toxicology results revealed the presence of the controlled substances marijuana, modafinil, oxazepam and temazepam, for which Respondent lacked a prescription. The Government's evidence at hearing included the testimony of DI Lewis, along with related alcohol and toxicology reports and California Highway Patrol arrest reports. (Gov't Exs. 6 & 7.) DI Lewis testified in substance that based on his investigation, including a review of a CURES Report, there were corresponding prescriptions for identified controlled substances in Respondent's system with the exception of temazepam and marijuana. (Tr. 278–79.)

Respondent argues in substance that the ''sole conviction for a 'wet and reckless' misdemeanor, to which Respondent pleaded guilty, and which there is little evidence of any drugs for which he did not have a valid prescription,'' as a single error, ''is not any indication of impairment or abuse, nor is there any other evidence of impairment or abuse.'' (Resp't Br. at 8–9.) Respondent presented testimony from Dr. Markowitz, who testified in substance that he is board-certified and currently practicing psychiatry. (Tr. 257–58.) Dr. Markowitz testified that he began treating Respondent in 2005, noting that Respondent was ''pretty severely depressed at the time,'' for which Dr. Markowitz prescribed medications and Respondent ''improved markedly pretty quickly.'' (Tr. 259.) Dr. Markowitz diagnosed Respondent with major depression along with generalized anxiety disorder, noting past stressors of divorce, health, child visitation and financial issues. (Tr. 260.) Dr. Markowitz further testified that upon review of the toxicology document (Gov't Ex. 6) he prescribed two of the listed medications, namely clorazepate, sold under the trade name Tranxene, and Provigil, referred to on the toxicology report as ''modafinil.'' (Tr. 263–64.) Dr. Markowitz also opined that Respondent is not ''depressed at this time'' and ''from a psychiatric perspective, I don't have any issues with his ability to practice.'' (Tr. 265.)

David Smiley Purvis also credibly testified to counseling Respondent on a weekly basis since May 2008 for anger and frustration management issues related to family matters. (Tr. 292–93.)

Respondent presented testimony in response to the June 2008 arrest, along with testimony explaining his health and other personal issues leading up to his August 2008 surrender of registration. Respondent testified in substance to having serious health issues and surgery between 2000 and 2002, as well as surgery again in 2004, and a heart condition in 2005 that involved inpatient treatment. (Tr. 307.) Additionally, Respondent testified to personal problems impacting his life including a 2004 divorce with custody issues involving his child. (Tr. 313–14.) Respondent further testified to ongoing issues with depression, staff problems in his office, and two break-ins and thefts from his office in 2007.

Turning to the June 2008 arrest, Respondent testified to pleading to a ''wet reckless'' charge,[55] and then took six months of classes which ''were about alcohol addiction.'' [56] (Tr. 330.) Respondent testified that he was taking three medications at the time: ''Provigil,'' ''Tranxene,'' and an antidepressant which Respondent thinks was ''Pristiq.'' (Tr. 328.) Respondent testified that all three were prescribed by Dr. Markowitz. Respondent's counsel then reminded Respondent that Dr. Markowitz only identified two prescriptions, ''but you mentioned you were on three medications,'' to which Respondent stated ''[w]ell the third one was the metabolite of benzodiazepine.'' [57]

I find by a preponderance of the evidence that Respondent used controlled substances, namely temazepam and marijuana, without a valid prescription and contrary to state and federal law in or about June 2008.[58]

[52] At no time during pre-hearing proceedings did Respondent raise by motion or otherwise this issue of unavailable files despite numerous opportunities to do so, as more fully explained in the procedural portion of this Recommended Decision. Respondent's suggestion in testimony that the missing files impeded his ability to take care of his patients is not a relevant issue in the instant proceeding, even if true, because Respondent's misconduct at issue in this proceeding predated the seizure of the nine patient files discussed above. (Tr. 325.)

[53] *See* 21 CFR § 1306.04(a); 21 U.S.C. § 841(a)(1); and Cal. Health & Safety code §§ 11217; 11153(a) and 11156(a); Cal. Bus. & Prof. Code §§ 2241; 2442(a) and 3600.

[54] *See also Hoxie* v. *DEA,* 419 F.3d 477, 484 (6th Cir. 2005) (decision to revoke registration ''consistent with the DEA's view of the importance of physician candor and cooperation.'')

[55] No further evidence or explanation at hearing of term ''wet reckless'' was offered, although as a matter of California practice the term refers to violations of Cal. Veh. Code § 23103.5 (West 2009). *See, e.g., People* v. *Claire,* 280 Cal. Rptr. 269, 271 n.2 (Cal. Ct. App. 1991) (''For the sake of convenience, we adopt this sodden terminology.'').

[56] Respondent presented testimony regarding events surrounding his arrest for driving under the influence, including testimony of consumption of ''one'' glass of ''ale.'' I note that Respondent's testimony differs in various respects from the California Highway Patrol report, including notations in the police reports that Respondent admitted to drinking two beers. (*See* Gov't Ex. 7 at 2, 10.) In any event, given the absence of other evidence or explanation for the discrepancies, I generally accept the testimony of Respondent that this was an isolated incident involving consumption of a relatively small quantity of alcohol. I also accept Respondent's testimony that he completed a class on alcohol addiction.

[57] Respondent's answer regarding the ''third'' prescription is at best non-responsive. Whether or not the third one was a metabolite of benzodiazepine does not respond to the substantive issue of whether Respondent had a prescription for the controlled substance, nor does it explain Respondent's earlier testimony that he thinks it was ''Pristiq.'' No other testimony or evidence was offered.

[58] Gov't Ex. 6 at 3; 21 U.S.C. § 844(a); 21 CFR § 1306.04(a); Cal. Bus. & Prof. Code. § 4060.

Respondent's argument that he was prescribed all of the controlled substances in his system is directly contradicted by the credible testimony of Dr. Markowitz and DI Lewis. I find no evidence of any alcohol or other non-prescribed controlled substance use by Respondent after June 2008, which is consistent with Dr. Markowitz's testimony and opinion that Respondent is not currently suffering from depression.

Agency precedent has ''long held that a practitioner's self-abuse of a controlled substance is a relevant consideration under factor five and has done so even when there is no evidence that the registrant abused his prescription writing authority.'' *Tony T. Bui, M.D.,* 75 Fed. Reg. 49,979, 49,989 (DEA 2010). Respondent's unlawful conduct in June 2008, which was associated with his use of alcohol and non-prescribed controlled substances, is clearly an ''indication of impairment or abuse'' at least in June 2008, and Respondent's argument to the contrary is without merit. That said, Respondent's conduct appears to be a relatively isolated event. Respondent testified to completing a class on alcohol addiction and there is no evidence to support a finding of alcohol or controlled substance abuse after June of 2008. *See Azen v. DEA,* 1996 WL 56114 at *2 (9th Cir. Feb. 9, 1996) (impressive evidence of rehabilitation and continued abstinence important consideration). Accordingly, I find Respondent's conduct in June 2008 to be inconsistent with the public interest and a relevant consideration weighing somewhat against registration.[59] *See David E. Trawick,* D.D.S., 53 Fed. Reg. 5326, 5326 (DEA 1988) (holding that ''offences or wrongful acts committed by a registrant outside of his professional practice, but which relate to controlled substances may constitute sufficient grounds'' for denying relief favorable to Respondent, where Respondent had history of alcohol and controlled substances abuse).

Because the Government has made out a prima facie case against Respondent, a remaining issue in this case is whether Respondent has adequately accepted responsibility for his past misconduct such that his registration might nevertheless be consistent with the public interest. *See Patrick W. Stodola,* 74 Fed. Reg. 20,727, 20,734 (DEA 2009). Respondent argues generally that the Government has failed to demonstrate that granting Respondent a new registration would be inconsistent with the public interest. But across various dimensions, the record reveals that Respondent has not sustained his burden in this regard. In fact, as discussed above, Respondent's testimony in numerous material instances was not credible and reflected an overall lack of admission of past misconduct, let alone acceptance of responsibility. The passage of time since Respondent's misconduct is of no consequence with regard to the issue of acceptance of responsibility. ''DEA has long held that '[t]he paramount issue is not how much time has elapsed since [his] unlawful conduct, but rather, whether during that time * * * Respondent has learned from past mistakes and has demonstrated that he would handle controlled substances properly if entrusted with a' new registration.'' *Robert L. Dougherty, M.D.,* 76 Fed. Reg. 16,823, 16,835 (DEA 2011) (citing *Leonardo V. Lopez, M.D.,* 54 Fed. Reg. 36,915, 36,915 (DEA 1989) and *Robert A. Leslie, M.D.,* 68 Fed. Reg. 15,227, 15,227 (DEA 2003)). Respondent's testimony with regard to his June 2008 misconduct, and his misconduct pertaining to Factors Two and Four, clearly indicate a complete lack of acceptance of responsibility.

I find that Respondent's lack of credibility during numerous material portions of his testimony weighs heavily in favor of denying Respondent's application. *See Hoxie v. DEA,* 419 F.3d 477, 483 (6th Cir. 2005) (DEA properly considers physician's candor, forthrightness in assisting investigation and admitting of fault as important factors in determining whether registration is consistent with public interest). In light of the foregoing, Respondent's evidence as a whole fails to sustain his burden to accept responsibility for his misconduct and demonstrate that he will not engage in future misconduct. I find that Factor Five weighs heavily in favor of a finding that Respondent's registration would be inconsistent with the public interest.

VI. Conclusion and Recommendation

After balancing the foregoing public interest factors, I find that the Government has established by substantial evidence a prima facie case in support of denying Respondent's application for registration, based on Factors Two, Four and Five of 21 U.S.C. § 823(f). Once DEA has made its prima facie case for revocation or denial, the burden shifts to the respondent to show that, given the totality of the facts and circumstances in the record, revoking or denying the registration would not be appropriate. *See Morall v. DEA,* 412 F.3d 165, 174 (D.C. Cir. 2005); *Humphreys v. DEA,* 96 F.3d 658, 661 (3d Cir. 1996); *Shatz v. United States Dep't of Justice,* 873 F.2d 1089, 1091 (8th Cir. 1989); *Thomas E. Johnston,* 45 Fed. Reg. 72, 311 (DEA 1980).

Additionally, where a registrant has committed acts inconsistent with the public interest, he must accept responsibility for his actions and demonstrate that he will not engage in future misconduct. *See Patrick W. Stodola,* 74 Fed. Reg. 20,727, 20,735 (DEA 2009). Also, ''[c]onsideration of the deterrent effect of a potential sanction is supported by the CSA's purpose of protecting the public interest.'' *Joseph Gaudio, M.D.,* 74 Fed. Reg. 10,083, 10,094 (DEA 2009). An agency's choice of sanction will be upheld unless unwarranted in law or without justification in fact. A sanction must be rationally related to the evidence of record and proportionate to the error committed. *See Morall v. DEA,* 412 F.3d 165, 181 (D.C. Cir. 2005). Finally, an ''agency rationally may conclude that past performance is the best predictor of future performance.'' *Alra Laboratories, Inc. v. DEA,* 54 F.3d 450, 452 (7th Cir. 1995).

I recommend denial of Respondent's application for a COR. I find the evidence as a whole demonstrates that Respondent has not accepted responsibility and his registration would be inconsistent with the public interest. Respondent's overall lack of candor while testifying at hearing is fully consistent with a denial of Respondent's application for a DEA COR.

Dated: April 29, 2011.

Timothy D. Wing,

Administrative Law Judge.

[FR Doc. 2012–7619 Filed 3–29–12; 8:45 am]

BILLING CODE 4410–09–P

[59] In light of the absence of other evidence of controlled substance and alcohol abuse, the passage of time, and Respondent's attendance at alcohol addiction classes, I give this issue little overall weight for purposes of my recommended decision.

DEPARTMENT OF LABOR

Employee Benefits Security Administration

[Application No. D–11679]

Notice of Amendment to Proposed Exemption Sammons Enterprises, Inc. Employee Stock Ownership Plan (the ESOP); Located in Dallas, TX

AGENCY: Employee Benefits Security Administration, U.S. Department of Labor.

ACTION: Notice of amendment to proposed exemption.

SUMMARY: This document contains a notice of pendency before the Department of Labor (the Department) of an amendment to a proposed individual exemption from certain prohibited transaction restrictions of the Employee Retirement Income Security Act of 1974, as amended (ERISA), and the Internal Revenue Code of 1986, as amended (the Code). The proposed transactions involve Sammons Enterprises, Inc. (Sammons). The proposed exemption, if granted, would affect the ESOP for which Sammons is the sponsor, and the participants and beneficiaries of the ESOP.

Temporary Nature of Exemption: This exemption, if granted, will expire at the earlier of (i) the first day of the first fiscal year of Sammons next following the fiscal year in which falls the fifth anniversary of the date of grant of the exemption; and (ii) the first day upon which the ESOP fails to own at least 99% of the issued and outstanding shares of Sammons.

Written Comments and Hearing Requests: All interested persons are invited to submit written comments and/or requests for a hearing on the proposed exemption within forty five (45) days from the date of the publication of this **Federal Register** Notice. Comments and requests for a hearing should state: (1) The name, address and telephone number of the person making the comment or the request for a hearing and (2) the nature of the person's interest in the proposed exemption and the manner in which the person would be adversely affected by the proposed exemption. A request for a hearing must also state the issues to be addressed at the requested hearing and include a general description of the evidence to be presented at the requested hearing.

ADDRESSES: All written comments and requests for a public hearing concerning the proposed exemption should be sent to the Office of Exemption Determinations, Employee Benefits Security Administration, Room N–5700, U.S. Department of Labor, 200 Constitution Avenue NW., Washington, DC 202010, Attention: Application No. D–11679. Interested persons are also invited to submit comments and/or hearing requests to the Employee Benefits Security Administration by email or FAX. Any such comments or requests should be sent either to: *moffitt.betty@dol.gov,* or by FAX to (202) 219–0204 by the end of the scheduled comment period. The application for exemption and the comments received will be available for inspection in the Public Documents Room of the Employee Benefits Security Administration, U.S. Department of Labor, Room N–1513, 200 Constitution Avenue NW., Washington, DC 20210.

Warning: If you submit written comments or hearing requests, do not include any personally-identifiable or confidential business information that you do not want to be publicly-disclosed. All comments and hearing requests are posted on the Internet exactly as they are received, and they can be retrieved by most Internet search engines. The Department will make no deletions, modifications or redactions to the comments or hearing requests received, as they are public records.

FOR FURTHER INFORMATION CONTACT: Gary H. Lefkowitz, Office of Exemption Determinations, Employee Benefits Security Administration, U.S. Department of Labor, telephone (202) 693–8546. (This is not a toll-free number.)

SUPPLEMENTARY INFORMATION: This document contains a notice of amendment to a proposed individual exemption from the restrictions of ERISA 406(a)(1)(A) and (D), 406(b)(1), and 406(b)(2), and the sanctions resulting from the application of section 4975 of the Code, by reason of section 4975(c)(1)(A), (D) and (E) of the Code. The proposed exemption has been requested by GreatBanc Trust Company (GreatBanc), the independent fiduciary for the ESOP, pursuant to ERISA section 408(a) and Code section 4975(c)(2), and in accordance with the procedures set forth in 29 CFR Part 2570, Subpart B (55 FR 32836, 32847, August 10, 1990). Effective December 31, 1978, section 102 of the Reorganization Plan No. 4 of 1978, (43 FR 47713, October 17, 1978) transferred the authority of the Secretary of the Treasury to issue exemptions of the type requested to the Secretary of Labor. Accordingly, this proposed exemption is being issued solely by the Department.

On November 14, 2011, the Department of Labor (the Department) published in the **Federal Register** (76 FR 70503) a notice of proposed exemption (the Notice) for a transaction involving the ESOP. The entity that requested the exemption, GreatBanc, the independent fiduciary for the ESOP, as well as the ESOP's sponsor, Sammons, have now requested a clarification with respect to the conditions that appeared in the Notice.

Condition (f) of the Notice reads: ''(f) Shares of Sammons stock are held in an ESOP suspense account, and are allocated each year to each eligible ESOP participant at the maximum level permitted under the Code;'' and Representation (f) in Paragraph 16 of the Summary of Facts and Representations of the Notice reads the same way.

GreatBanc represents that this statement was likely the product of the following representation made in the original application submitted to the Department and repeated in Paragraph 5 of the Notice: ''Although the ESOP is not leveraged, under a special structure established pursuant to Section 664(g) of the Code, the shares acquired from the [Sammons] charitable remainder trust are held in an ESOP suspense account, and are currently allocated each year to each eligible ESOP participant at the maximum level permitted under Code Section 664(g)(7), i.e., 25% of compensation (up to a maximum allocation of $45,000).''

GreatBanc confirms that the representations in the exemption application concerning the level of current allocations to ESOP participants are entirely accurate. Participants received the maximum allocations permitted under the Code for the 2010 Plan year (the first Plan year for which Code Section 664(g)(7) applied to the ESOP), and will receive the maximum level of allocations for the 2011 Plan year as well. It was not, however, the intention of GreatBanc nor Sammons to represent to the Department, nor to offer as a condition for the granting of an exemption, that the ESOP would provide the maximum permitted allocations to ESOP participants during each Plan year for which the exemption proposed herein would be in effect, but rather to represent that the allocations made to ESOP participants would at all times be made in accordance with the applicable provisions of Code Section 664(g).

The Department has accepted this request for clarification by GreatBanc and Sammons and has accordingly amended the Notice so that condition (f) now reads: ''(f) Shares of Sammons stock are held in an ESOP suspense account, and are allocated each year to each eligible ESOP participant in accordance with the applicable provisions of the Code;'' and the Department notes that Representation 16, subsection (f) of the Notice is similarly amended.

Notice of Amendment to Proposed Exemption

The Department of Labor (the Department) is considering granting an exemption under the authority of section 408(a) of the Act in accordance with procedures set forth in 29 CFR Part 2570, Subpart B (55 FR 32836, 32847, August 10, 1990). If the proposed exemption is granted, the restrictions of

sections 406(a)(1)(A) and (D), 406(b)(1), and 406(b)(2) of the Act, and the sanctions resulting from the application of section 4975 of the Code, by reason of section 4975(c)(1)(A), (D) and (E) of the Code, shall not apply to the personal holding company consent dividend election (the Consent) with respect to Sammons Enterprises, Inc. (Sammons), by the trustee of the ESOP, provided that the following conditions are satisfied:

(a) The trustee of the ESOP is an independent, qualified fiduciary (the I/F), acting on behalf of the ESOP, which determines prior to entering into the transaction that the transaction is feasible, in the interest of, and protective of the ESOP and the participants and beneficiaries of the ESOP;

(b) Before the ESOP enters into the proposed transaction, the I/F reviews the transaction, and determines whether or not to approve the transaction, in accordance with the fiduciary provisions of the Act;

(c) The I/F monitors compliance with the terms and conditions of this proposed exemption, as described herein, and ensures that such terms and conditions are at all times satisfied;

(d) Sammons provides to the I/F, in a timely fashion, all information reasonably requested by the I/F to assist it in making its decision whether or not to approve the transaction;

(e) The consent dividend will represent no more than two percent (2%) of the ESOP's assets in any taxable year within the timeframe of the exemption proposed herein;

(f) Shares of Sammons stock are held in an ESOP suspense account, and are allocated each year to each eligible ESOP participant in accordance with the applicable provisions of the Code;

(g) All of the requirements of section 565 of the Code are met with respect to the Consent; and

(h) All shareholders of Sammons are requested to consent to the dividend in the manner prescribed under section 565 of the Code.

Notice to Interested Persons: The applicant represents that notice to interested persons will be provided by first class mail within 15 days of the publication of this Notice of Amendment to Proposed Exemption in the **Federal Register**. This notification to interested persons will include both a copy of the November 14, 2011 Notice and a copy of this Notice of Amendment to Proposed Exemption.

Signed at Washington, DC, this 27th day of March 2012.

Lyssa E. Hall,

Acting Director of Exemption Determinations, Employee Benefits Security Administration, U.S. Department of Labor.

[FR Doc. 2012–7703 Filed 3–29–12; 8:45 am]

BILLING CODE 4510–29–P

DEPARTMENT OF LABOR

Employee Benefits Security Administration

Exemptions From Certain Prohibited Transaction Restrictions

AGENCY: Employee Benefits Security Administration, Labor.

ACTION: Grant of Individual Exemptions.

SUMMARY: This document contains exemptions issued by the Department of Labor (the Department) from certain of the prohibited transaction restrictions of the Employee Retirement Income Security Act of 1974 (ERISA or the Act) and/or the Internal Revenue Code of 1986 (the Code). This notice includes the following Grants: D–11628, Aztec Well Servicing Company & Related Companies Medical Plan Trust Fund (the Plan), 2012–04; D–11637, HSBC–North America (U.S.) Tax Reduction Investment Plan (the Plan), 2012–05; D–11662, Retirement Program for Employees of EnPro Industries (the Plan), 2012–06; D–11669, Genzyme Corporation 401(k) Plan and Its Successor Plans (together, the Plan or the Applicant), 2012–07; and D–11680, Citigroup Inc. (Citigroup or the Applicant), 2012–08.

SUPPLEMENTARY INFORMATION: A notice was published in the **Federal Register** of the pendency before the Department of a proposal to grant such exemptions. The notice set forth summaries of facts and representations contained in the applications for exemption and referred interested persons to the applications for a complete statement of the facts and representations. The applications have been available for public inspection at the Department in Washington, DC The notice also invited interested persons to submit comments on the requested exemptions to the Department. In addition the notice stated that any interested person might submit a written request that a public hearing be held (where appropriate). The applicants have represented that they have complied with the requirements of the notification to interested persons. No requests for a hearing were received by the Department. Public comments were received by the Department as described in the granted exemptions.

The notice of proposed exemption was issued and the exemptions are being granted solely by the Department because, effective December 31, 1978, section 102 of Reorganization Plan No. 4 of 1978, 5 U.S.C. App. 1 (1996), transferred the authority of the Secretary of the Treasury to issue exemptions of the type proposed to the Secretary of Labor.

Statutory Findings

In accordance with section 408(a) of the Act and/or section 4975(c)(2) of the Code and the procedures set forth in 29 CFR part 2570, subpart B (76 FR 66637, 66644, October 27, 2011) [1] and based upon the entire record, the Department makes the following findings:

(a) The exemption is administratively feasible;

(b) The exemption is in the interests of the plan and

its participants and beneficiaries; and

(c) The exemption is protective of the rights of the participants and beneficiaries of the plan.

Aztec Well Servicing Company & Related Companies Medical Plan Trust Fund (the Plan) Located in Aztec, New Mexico

[Prohibited Transaction Exemption 2012–04; Exemption Application No. D–11628]

Exemption

Section I

The restrictions of sections 406(a)(1)(A), (C) and (D), 406(b)(1), and 406(b)(2) of the Act shall not apply to the payment by the Plan to Basin Occupational & Urgent Care, LLC (BOUC), a party in interest with respect to the Plan, for the on-site provision to the Plan of urgent medical care and wellness services by a nurse-practitioner and a wellness coordinator employed by BOUC, provided that the following conditions are satisfied:

(a) An independent, qualified fiduciary (I/F), with expertise in plans providing health and welfare benefits under the Act and the fiduciary obligations thereunder, acting on behalf of the Plan, determines prior to entering into the transaction that the transaction is feasible, in the interest of, and protective of the Plan and the participants and beneficiaries of the Plan;

(b) Before the Plan enters into the proposed transaction, the I/F reviews the transaction, ensures that the terms of

[1] The Department has considered exemption applications received prior to December 27, 2011 under the exemption procedures set forth in 29 CFR part 2570, subpart B (55 FR 32836, 32847, August 10, 1990).

the transaction are at least as favorable to the Plan as an arm's length transaction with an unrelated party, and determines whether or not to approve the transaction, in accordance with the fiduciary provisions of the Act;

(c) The I/F monitors compliance with the terms and conditions of this exemption, as described herein, and ensures that such terms and conditions are at all times satisfied;

(d) The I/F monitors compliance with the terms of the written license agreement (the License) between the Plan and Aztec Well Servicing Company, and takes any and all steps necessary to ensure that the Plan is protected, including, but not limited to, exercising its authority to terminate the License on 10 days' written notice; and

(e) The subject transaction is, in fact, on terms and at all times remains on terms that are at least as favorable to the Plan as those that would have been negotiated under similar circumstances at arm's-length with an unrelated third party.

Section II

The restrictions of sections 406(a)(1)(A), (C) and (D), 406(b)(1), and 406(b)(2) of the Act shall not apply, effective July 1, 2010, to: (1) The payment by the Plan's participants to BOUC for medical services provided as a result of the inclusion of BOUC's clinic, located in Farmington, New Mexico, as a network provider in the BlueCross BlueShield of New Mexico (BCBSNM) Network of Health Care Providers; and (2) the payment by the Plan to BCBSNM of the difference between BOUC's fee and the participant's co-pay, which difference is then transmitted by BCBSNM to BOUC, provided that the following conditions are satisfied:

(a) The terms of the medical services provided by BOUC to Plan participants are at least as favorable to the participants as those they could obtain in similar transactions with an unrelated party;

(b) The Plan participants will have access to all of the providers in BCBSNM's network and will be free to choose whether or not to use BOUC's clinic;

(c) At least 99% of the providers participating in the BCBSNM are unrelated to the companies whose employees participate in the Plan, or any other party in interest with respect to the Plan;

(d) BOUC will be treated no more favorably than any other provider participating in the BCBSNM; and

(e) The transactions are not part of an agreement, arrangement or understanding designed to benefit BOUC or any other party in interest with respect to the Plan.

For a more complete statement of the facts and representations supporting the Department's decision to grant this exemption, refer to the notice of proposed exemption published on December 13, 2011 at 76 FR 77610.

DATES: *Effective Date:* With respect to the transactions described in Section II, this exemption is effective July 1, 2010.

FOR FURTHER INFORMATION CONTACT: Gary H. Lefkowitz of the Department, telephone (202) 693–8546. (This is not a toll-free number.)

HSBC-North America (U.S.) Tax Reduction Investment Plan (the Plan) Located in Mettawa, Illinois

[Exemption Application No. D–11637 Prohibited Transaction Exemption 2012–05]

Exemption

Effective March 2, 2009, the restrictions of sections 406(a)(1)(A) and 406(a)(1)(E), 406(a)(2), 406(b)(1), 406(b)(2), and 407(a)(1)(A) of the Act and the sanctions resulting from the application of section 4975 of the Code, by reason of section 4975(c)(1)(A) and 4975(c)(1)(E) of the Code,[2] shall not apply:

(1) To the acquisition of certain rights (the ADS Rights) by the Plan in connection with an offering (the Offering) of shares of stock (the Stock) in HSBC Holdings plc (Holdings) by Holdings, a party in interest with respect to the Plan,

(2) To the holding of the ADS Rights received by the Plan during the subscription period of the Offering; provided that the conditions as set forth in Section II of this exemption were satisfied;

Section II: Conditions

The relief provided in this exemption is conditioned upon adherence to the material facts and representations described, herein, and as set forth in the application file and upon compliance with the conditions, as set forth in this exemption.

(1) The receipt by the Plan of the ADS Rights occurred in connection with the Offering made available by Holdings on the same terms to all shareholders, such as the Plan, of American Depository Shares[3] (the HSBC ADS) which represent the Stock of Holdings;

(2) The acquisition of the ADS Rights by the Plan resulted from an independent act of Holdings, as a corporate entity, and all holders of the ADS Rights, including the Plan, were treated in the same manner with respect to the acquisition of such rights;

(3) All holders of the ADS Rights, such as the Plan, received the same proportionate number of such rights based on the number of HSBC ADS held; and

(4) All decisions regarding the ADS Rights made by the Plan were made by an independent, qualified fiduciary which:

(a) Conducted a due diligence review of the Offering;

(b) Determined whether or not to direct the Plan to vote in favor of the Offering; and

(c) Evaluated a prudent strategy for disposition of the ADS Rights under the Offering that were allocated to the Plan.

Effective Date: This exemption is effective, on March 2, 2009, the date of the announcement of the Offering.

Written Comments

In the Notice of Proposed Exemption (the Notice), the Department invited all interested persons to submit written comments and requests for a hearing on the proposed exemption within 45 days of the date of the publication of the Notice in the **Federal Register** on November 14, 2011.[4] All comments and requests for hearing were due by December 29, 2011.

During the comment period the Department received no requests for hearing. However, the Department did receive a comment letter, dated December 29, 2011, from the applicants (the Applicants). In the comment letter the Applicants requested one (1) amendment to the language of Section I(1), as set forth on page 70496 in the Notice. In this regard, the reference to the name, ''HSBC Holding, plc,'' should be changed to ''HSBC Holdings plc.'' The Department concurs with the Applicants' requested amendment to Section I(1).

In addition the Applicants requested three (3) clarifications to the Summary of Facts and Representations (the SFR) of the Notice. The Applicants' requested clarifications to the SFR are discussed, below, in an order that corresponds to the appearance of the relevant language in the Notice.

1. In paragraph 4, as set forth in the SFR, on page 70497 of the Notice, the Applicants clarify that HSBC North

[2] For purposes of this exemption, references to specific provisions of Title I of the Act, unless otherwise specified, refer also to the corresponding provisions of the Code.

[3] American Depository Shares permit investment in foreign securities to trade on markets in the United States without many of the complications that would otherwise arise from such cross-border and cross-currency transactions.

[4] 76 FR 70495, November 14, 2011.

America Holdings, Inc. and its subsidiaries comprise all of the business interests of HSBC Holdings plc in the United States. The Department concurs with the Applicants' requested clarification.

2. In paragraph 16, as set forth in the SFR, on page 70499 and 70501 of the Notice, the Applicants clarify that further examination of the fees under each of the options available to the Plan has shown that a stamp tax (a United Kingdom Stamp Duty Reserve Tax) would not have been incurred under Option (C). The Plan would only have paid a stamp tax under Option (A). The Department concurs with the Applicants' requested clarification.

3. In paragraph 19, as set forth in the SFR, on page 70502 of the Notice, the Applicants represent that the Offering included a default procedure to protect the interests of ADS Rights holders who did not take action with respect to the ADS Rights they received in the Offering. The Department concurs with the Applicants' requested clarification.

After full consideration and review of the entire record, including the written comment letter filed by the Applicants, the Department has determined to grant the exemption, as amended and clarified above. Comments submitted by the Applicants to the Department in the comment letter have been included as part of the public record of the exemption application. The complete application file (D–11637), including all supplemental submissions received by the Department, is available for public inspection in the Public Documents Room of the Employee Benefits Security Administration, Room N–1513, U.S. Department of Labor, 200 Constitution Avenue NW., Washington, DC 20210.

For a more complete statement of the facts and representations supporting the Department's decision to grant this exemption refer to the Notice published on November 14, 2011, at 76 FR 70495.

FOR FURTHER INFORMATION CONTACT: Ms. Angelena C. Le Blanc of the Department, telephone (202) 693–8540. (This is not a toll-free number.)

Retirement Program for Employees of EnPro Industries (Plan) Located in Charlotte, NC

[Prohibited Transaction Exemption 2012–06; Exemption Application No. D–11662]

Exemption

The restrictions of sections 406(a)(1)(A) and 406(b)(1) and (b)(2) of the Act and the sanctions resulting from the application of section 4975(c)(1)(A) and (E) of the Code, shall not apply, effective July 15, 2011, to the in kind contribution (the Contribution) to the Plan of a guaranteed investment contract (the Annuity), issued by the Metropolitan Life Insurance Company, an unrelated party, by EnPro Industries, Inc. (EnPro); provided that the following conditions were satisfied:

(a) A qualified, independent fiduciary (the Independent Fiduciary), acting on behalf of the Plan, determined whether the Contribution was in the interests of the Plan and protective of the Plan's participants and beneficiaries;

(b) The Independent Fiduciary reviewed, negotiated and approved the terms of the Contribution on behalf of the Plan in accordance with the fiduciary provisions of the Act;

(c) A qualified, independent appraiser determined the fair market value of the Annuity prior to the Contribution, and it updated such valuation on the date of the Contribution;

(d) The Annuity represented approximately 19% of the Plan's assets at the time of the Contribution;

(e) The Plan incurred no fees, commissions, or other charges or expenses in connection with the Contribution;

(f) The terms of the Contribution were no less favorable to the Plan than the terms negotiated at arm's length under similar circumstances between unrelated parties; and

(g) EnPro amended the Investment Policy Statement for the Plan in conformity with the recommendations of the Independent Fiduciary prior to the Contribution.

Effective Date: This exemption is effective as of July 15, 2011.

Written Comment

In the Notice of Proposed Exemption (76 FR 77619, December 13, 2011) (the Notice), the Department invited all interested persons to submit written comments and requests for a hearing on the Notice within forty (40) days of the date of the publication of such Notice in the **Federal Register**. All comments and requests for a hearing from interested persons were due by January 23, 2012.

During the comment period, the Department did not receive any requests for a public hearing. However, the Department did receive one written comment from a Plan participant, who sought to clarify whether the Plan had sufficient funds to cover Plan benefit obligations due before the Annuity matured on December 31, 2014. In a telephone call to the participant, a Department representative explained that Paragraph 20 of the Notice included a representation from the Independent Fiduciary, which had confirmed with the Plan's actuary that the Plan would be in a position to meet its benefit obligations from the date of the Contribution until the maturity date of the Annuity.

For a more complete statement of the facts and representations supporting the Department's decision to grant this exemption, refer to the Notice published on December 13, 2011 at 76 FR 77619.

FOR FURTHER INFORMATION CONTACT: Mr. Anh-Viet Ly of the Department at (202) 693–8648. (This is not a toll-free number.)

Genzyme Corporation 401(k) Plan and Its Successor Plans (Together, the Plan or the Applicant) Located in Cambridge, MA

[Prohibited Transaction Exemption 2012–07; Exemption Application No. D–11669]

Exemption

The restrictions of sections 406(a), 406(b)(1) and (b)(2) and section 407(a) of the Act and the sanctions resulting from the application of section 4975 of the Code, by reason of section 4975(c)(1)(A) through (E) of the Code,[5] shall not apply, effective April 4, 2011, to (1) the acquisition by the Plan of contingent value rights (CVRs) as a result of the Plan's ownership of certain common stock (Genzyme Common Stock) in Genzyme Corporation (Genzyme), the Plan sponsor, in connection with (a) the purchase of shares (Shares) of Genzyme Common Stock pursuant to an exchange offer (the Exchange Offer) and a subsequent offer to the Exchange Offer (the Subsequent Exchange Offer) by GC Merger Corp. (the Purchaser), a wholly-owned subsidiary of sanofi-aventis (Sanofi), a party in interest with respect to the Plan, and (b) the ''short-form'' merger (the Merger) of the Purchaser into Genzyme (together, the Transactions); (2) the continued holding of CVRs by the Plan; and (3) the resale of the CVRs by the Plan to Sanofi, pursuant to the exercise of repurchase rights available under certain circumstances specified in the Contingent Value Rights Agreement (the CVR Agreement).

This exemption is subject to the following conditions:

(a) Plan participants holding Genzyme Common Stock received one CVR for each Share on the effective date of the tender or cancellation of their Shares, in connection with the Transactions.

(b) The acquisition of CVRs by the Plan occurred in connection with the Transactions on the same terms and in the same manner as the acquisition of

[5] For purposes of this exemption, references to section 406 of the Act should be read to refer as well to the corresponding provisions of section 4975 of the Code.

CVRs by all other holders of Genzyme Common Stock, other than Sanofi, the Purchaser, Genzyme and dissenting shareholders.

(c) The Plan's acquisition of CVRs resulted either (1) from a decision by a participant or beneficiary to tender Shares allocated to his or her account or

(2) Following a decision by a participant or beneficiary not to tender Shares by reason of the Merger.

(d) The Plan did not pay any fees or commissions in connection with the acquisition of the CVRs, nor does it pay any fees or commissions in connection with the holding of CVRs or sale of CVRs to Sanofi pursuant to an exercise of Sanofi's repurchase right under the CVR Agreement.

(e) Credit Suisse Securities (USA) LLC and Goldman Sachs & Co advised Genzyme that the consideration received by Genzyme shareholders, including Plan participants, in exchange for their Shares was ''fair,'' from a financial point of view.

(f) The Plan does not acquire or hold CVRs other than those acquired in connection with the Transactions.

(g) Plan participants have the same rights with respect to CVRs allocated to their accounts under the Plan (including with respect to any repurchase of CVRs by Sanofi) as unrelated parties have with respect to CVRs not held under the Plan, and they may direct the Plan's trustee (the Trustee) to sell CVRs allocated to their respective accounts at any time.

(h) For so long as CVRs remain a permissible Plan investment, the retention or disposition by the Plan of CVRs allocated to a participant's or beneficiary's account is administered in accordance with the provisions of the Plan that are in effect for individually-directed investment of participant accounts.

Effective Date: This exemption is effective as of April 4, 2011. For a more complete statement of the facts and representations supporting the Department's decision to grant this exemption, refer to the notice of proposed exemption published on December 13, 2011, at 76 FR 77612.

Extension of Comment Period

The notice of proposed exemption (the Notice) invited all current participants and beneficiaries of the Plan (Interested Persons) to submit comments or requests for a hearing to the Department by January 27, 2012. The Applicant agreed to notify Interested Persons by first class mail within 15 days of the date that the Notice appeared in the **Federal Register**. The Applicant confirmed that Interested Persons were notified via first class mail on December 28, 2011, less than 30 days prior to the final day of the comment period. To ensure that Interested Persons would have at least 30 days to provide comments to the Department, the Applicant agreed to extend the comment period to January 31, 2012. Accordingly, the Applicant sent a supplementary letter announcing the extension of the comment period to Interested Persons via first class mail on January 19, 2012.

Written Comments

During the comment period, the Department received three written comments with respect to the Notice, and no requests for a public hearing. The first two comments stated matters that were not germane to the exemption request. The third comment and a supplemental response (together, the Comment Letter) were submitted by Genzyme, and are intended to (1) clarify that the exemption would apply to successor plans to the current Plan; (2) request changes to Conditions (d) and (g) of the Notice; and (3) correct or clarify minor errors and inconsistencies in the Notice. Genzyme's Comment Letter and the Department's responses are described below.

1. *Successor Plans.* On page 77618 of the Summary of Facts and Representations (the Summary), Representation 17 states that if the exemption is granted, ''it would also apply to successor plans to the current Plan.''

While the proposed extension of relief to successor plans is mentioned in the Summary, Genzyme notes that the text of the exemption at the beginning of the Notice does not make reference to ''successor plans.'' In order to avoid uncertainty in the future, Genzyme requests that the final text of the exemption reflect that any plan into which the Plan is merged or to which substantially all assets of the Plan are transferred will be entitled to rely on the exemption, to the same extent as the Plan would be entitled to rely on the exemption if no such merger or transfer had occurred.

In response to this comment, the Department has revised the title of the final exemption to include the ''Genzyme Corporation 401(k) Plan and Its Successor Plans,'' in order to clarify that relief extends to such successor plan(s).

2. *Requested Changes to Conditions (d) and (g) of the Notice.* Genzyme suggests that the Department consider revising Condition (d) of the Notice (on page 77613) to refer to ''fees or commissions in connection with the holding of CVRs or a sale of CVRs to Sanofi,'' rather than to ''fees or commissions in connection with the holding or sale of CVRs to Sanofi,'' as the condition currently reads. Genzyme states that this suggestion is offered not for the purpose of making any substantive change, but solely to enhance clarity.

In response to this comment, the Department has revised Condition (d) of the final exemption slightly to clarify the meaning of this condition and its applicability to Sanofi. The Department also notes a corresponding modification to Representation 23(d) of the Summary, on page 77618.

In addition, Condition (g) of the Notice requires that participants have the ability to direct the Trustee ''to sell CVRs allocated to their respective accounts *at any time''* (emphasis added). Genzyme notes that participants may, at certain times, be subject to limitations on their ability to direct the Trustee with regard to the investment of their accounts (*e.g.,* during a ''blackout period'' within the meaning of section 101(i) of the Act, or when applicable insider trading policies would prevent a participant from selling securities). In order to avoid any implication that the language in Condition (g) would fail to be satisfied in such circumstances, Genzyme suggests that the wording be revised to require that participants have the ability to direct the Trustee ''to sell CVRs allocated to their respective accounts *at any time, subject to any limitations that may be imposed by applicable law''* (emphasis added). Genzyme explains that this suggestion was made with the thought that there might be periods during which certain participants would be prohibited by federal securities laws from transacting in securities as to which they might have ''insider'' knowledge. Genzyme also emphasizes that there is no intention of imposing restrictions on the ability of participants to give investment directions with respect to CVRs held in their accounts under the Plan, except as otherwise required by applicable law.

In response to this comment, the Department has decided not to make the suggested revision to the Notice since it is inherently understood that the condition might be subject to limitations imposed by applicable law (*e.g.,* federal securities laws). However, the Department notes Genzyme's clarification to Condition (g) of the Notice and to Representation 23(g) of the Summary.

3. *Minor Errors and Inconsistencies in the Notice.* Genzyme requests that the two references to the merger of Sanofi into Genzyme (located in clause (1)(b) of

the operative language on page 77612 of the Notice and in Representation 17 of the Summary on page 77618) be revised to refer, instead, to the merger of the Purchaser into Genzyme.

In addition, Genzyme states that when the Purchaser was merged into Genzyme, the Purchaser ceased to exist as a separate entity. Genzyme notes that the statements regarding the Purchaser in Representation 4 of the Summary (on page 77613) were made in the present tense while the Purchaser continued to exist as a separate entity. Given the passage of time and the fact that the Purchaser has merged into Genzyme, Genzyme states that it would be appropriate to change this paragraph to the past tense, as follows:

> The Purchaser, a Massachusetts corporation, was incorporated on July 29, 2010, as a direct wholly-owned subsidiary of Sanofi. The Purchaser was organized by Sanofi to acquire Genzyme and did not conduct any unrelated activities between the time of its organization and the time of its merger into Genzyme. All of the outstanding shares of the capital stock of the Purchaser were owned by Sanofi.

Further, Genzyme states that on page 77614 of the Summary, Representation 5 contains the following representation: ''All Shares not tendered were converted into the right to receive the same Merger Consideration.'' Consistent with the preceding sentence and other information set forth in Representation 5, Genzyme states that the representation should instead read: ''All Shares not tendered were converted into the right to receive the same Merger Consideration, except for Shares held by Sanofi, Genzyme and their subsidiaries, and Shares held by shareholders who properly perfected appraisal rights under Massachusetts law.''

Representation 5 of the Summary also states that the Merger Consideration [6] in connection with the Exchange Offer and the Subsequent. Exchange Offer was paid on April 4, 2011. However, Genzyme notes that, as is correctly stated in Representation 7 of the Summary (on page 77614), the Merger Consideration paid in connection with the Subsequent Exchange Offer was actually paid on April 7, 2011.

Finally, Genzyme states that on page 77615 of the Summary, Representation 11 contains a typographical error. Genzyme explains that the phrase ''subject to certain conditions and expectations'' should read, instead, ''subject to certain conditions and exceptions.''

In response to the foregoing comments, the Department notes the clarifications and updates to the Notice.

Accordingly, after giving full consideration to the entire record, including the Comment Letter, the Department has determined to grant the exemption as modified herein.

For further information regarding the comment and other matters discussed herein, Interested Persons are encouraged to obtain copies of the exemption application file (Exemption Application No. D–11669) the Department is maintaining in this case. The complete application file, as well as all supplemental submissions received by the Department, are made available for public inspection in the Public Disclosure Room of the Employee Benefits Security Administration, Room N–1513, U.S. Department of Labor, 200 Constitution Avenue NW., Washington, DC 20210.

FOR FURTHER INFORMATION CONTACT: Anna Mpras Vaughan of the Department, telephone (202) 693–8565. (This is not a toll-free number.)

Citigroup Inc. (Citigroup or the Applicant) Located in New York, New York

[Prohibited Transaction Exemption 2012–08; Exemption Application No. D–11680]

Exemption

Citigroup Inc. and its current and future affiliates (collectively, Citigroup) shall not be precluded, as of December 1, 2010, from functioning as a ''qualified professional asset manager'' (QPAM), pursuant to Prohibited Transaction Exemption 84–14 (PTE 84–14) (49 FR 9494, March 13, 1984, as amended on August 23, 2005 at 70 FR 49305), solely because of a failure to satisfy Section I(g) of PTE 84–14, as a result of Citigroup's affiliation with Citibank Belgium SA (CBB), an entity convicted of three (3) counts of criminal activity in Belgium, provided that the following conditions are met [7]:

(a) The affiliate convicted under Belgium law does not provide fiduciary or QPAM services to employee benefit plans (plans) or otherwise exercise discretionary control over plan assets;

(b) ERISA-covered assets are not involved in the conduct that is the subject of the Belgian affiliate's conviction(s);

(c) Citigroup imposes its internal procedures, controls, and protocols on the Belgian affiliate to reduce the likelihood of any recurrence of the conduct that is the subject of the conviction(s), to the extent permitted by local law;

(d) This exemption is not applicable if Citigroup, or any affiliate (other than branches or affiliates found liable for similar crimes in Belgium in connection with the sale of certain structured notes (the Lehman Notes) is convicted of any of the crimes described in Section I(g) of PTE 84–14;

(e) Citigroup maintains records that demonstrate that the conditions of the exemption have been and continue to be met for at least six years following the conviction of an affiliate under Belgium law;

(f) Citigroup has adopted procedures to afford protection of the interests of participants and beneficiaries of employee benefit plans; and

(g) Citigroup complies with the other conditions of PTE 84–14, as amended.

Effective Date: This exemption is effective as of December 1, 2010.

For a more complete statement of the facts and representations supporting the Department's decision to grant this exemption, refer to the notice of proposed exemption (the Proposal) published on January 20, 2012 at 77 FR 3061.

Written Comments

The Department received one written comment letter with respect to the Proposal. The letter was submitted by the Applicant in order to make some minor corrections and clarifications with respect to the Proposal.

The Applicant provided updated information that CBB was only convicted on three counts of criminal activity in Belgium.[8] The Department has made a change in the first paragraph of this exemption in response to this comment.

The Applicant requested that the Department make certain changes to Conditions (b) and (c) of the Proposal. The Applicant requested that, for sake of clarity, the word ''Belgian'' be inserted before ''affiliate'' in both Conditions (b) and (c). In addition, because the convictions are under appeal, the Applicant requested that the word ''conduct'' be substituted for ''misconduct'' in Condition (b), and the phrase ''the conduct that is the subject of the convictions'' be substituted for the word ''misconduct'' in Condition (c). The Department has made these requested changes. The Applicant also

[6] The Merger Consideration consisted of (a) $74 in cash, less any applicable withholding for taxes and without interest, per Share, and (b) one CVR per Share.

[7] For purposes of this exemption, references to section 406 of ERISA should be read to refer to the corresponding provisions of section 4975 of the Code as well.

[8] CBB and three of its employees as of August 14, 2009 had been criminally charged with six counts of criminal activity. The three employees were each convicted on one count of criminal activity in Belgium.

requested that the Department make corresponding changes to the Summary of Facts and Representations (the Summary) section of the Proposal. The Department notes these revisions to Representation 8 of the Summary.

Condition (e) of the Proposal requires Citigroup to comply with certain recordkeeping requirements. However, Citigroup stated in its comment letter that only Condition (c) of the Proposal would lend itself to the maintenance of records regarding compliance with the exemption. Accordingly, Citigroup has requested that Condition (e) be revised to limit the recordkeeping requirement to ''the conditions of subsection (c) of the exemption.'' The Department does not agree with the Applicant on this point because recordkeeping would apply to the continuing validity of the exemption as a whole. Accordingly, the Department has not changed the condition.

Condition (f) of the Proposal currently provides that ''Citigroup has adopted procedures to afford ample protection of the interests of the participants and beneficiaries of employee benefit plans.'' The Applicant stated that it is unsure what the word ''ample'' is intended to mean and requested in its comment letter that the Department delete this word from Condition (f). The Department has done so. The Applicant also requested that the deletion of the word ''ample'' be made from Representation 8 of the Summary. The Department so notes.

In its comment letter, the Applicant had other requested changes to the Summary. The Applicant noted that the last sentence of Representation 2 indicates that CBB has no ERISA plan clients and is not expected to have any such clients in the future. According to the Applicant, although CBB does not act as a fiduciary to any ERISA plan, Citigroup cannot guarantee that an ERISA plan will never be a counterparty to any transaction entered into by CBB. As a result, the Applicant requested that the Department revise the last sentence of Representation 2 of the Proposal to state that ''* * *CBB is not expected to have any ERISA plan clients for whom it will perform any fiduciary or QPAM services or otherwise exercise discretionary control over plan assets in the future.'' In response, the Department notes this revision.

The Applicant represents that after a further review of the facts and circumstances surrounding the criminal convictions of CBB, it has determined that: (a) prior to his termination of employment, Jose de Penaranda de Franchimont was the Chief Country Officer and Chief Executive Officer of CBB, rather than its Chief Compliance Officer; and (b) the convictions were related to the use of fact sheets, in addition to marketing letters and leaflets, as well as a prospectus. The Applicant has therefore requested in its comment letter that Footnote 57 to Representation 3 be revised to replace Mr. de Penaranda de Franchimont's title as ''Chief Country Officer and Chief Executive Officer.'' The Applicant also notes the correct spelling of Mr. de Penaranda de Franchimont's name. In addition, Citigroup has requested that the third sentence of Representation 3 be revised to refer to the ''use of certain marketing letters, leaflets and fact sheets, as well as a prospectus.'' The Department notes these revisions.

Representation 5 addresses the reasons that the Proposal would be protective of the rights of participants and beneficiaries of affected plans. For purposes of clarity, the Applicant requested in its comment letter that the Department revise subsection (d) of Representation 5 to read: ''A consistent framework and requirements were developed through the policy for mandatory sales force training on products, as well as Citigroup policies.'' The Department notes this revision.

Representation 7 addresses Citigroup's compliance policies and procedures and notes that Mr. Staroukine, CBB's Belgium Country Counsel, has no involvement with ERISA plans and will not have any future dealings with ERISA plans while employed by Citigroup, CBB, or an affiliate. The Applicant stated in its comment letter that although it is correct that Mr. Staroukine does not act as a fiduciary to any ERISA plan, CBB cannot ensure that he will never have any involvement in any transaction in which an ERISA plan may be a counterparty. The Department so notes. In addition, Citigroup contended in its comment letter that Mr. Staroukine should not be prohibited from ever acting as a fiduciary to an ERISA plan in the event his conviction is overturned on appeal. Therefore the Applicant requested that the last sentence of Representation 7 of the Proposal be revised to read: ''The Applicant further represents that Mr. Staroukine, although currently serving as CBB's Belgium Country Counsel, does not act as a fiduciary to any ERISA plan, and will not act as a fiduciary to any ERISA plan while he is employed by the Applicant, CBB or an affiliate, unless the convictions are overturned on appeal. The Department notes this revision.

The Department has considered the entire record, including the comment letter filed by the Applicant, and has determined to grant the exemption as proposed, subject to the revisions described herein.

FOR FURTHER INFORMATION CONTACT: Gary H. Lefkowitz of the Department, telephone (202) 693–8546. (This is not a toll-free number.)

General Information

The attention of interested persons is directed to the following:

(1) The fact that a transaction is the subject of an exemption under section 408(a) of the Act and/or section 4975(c)(2) of the Code does not relieve a fiduciary or other party in interest or disqualified person from certain other provisions to which the exemption does not apply and the general fiduciary responsibility provisions of section 404 of the Act, which among other things require a fiduciary to discharge his duties respecting the plan solely in the interest of the participants and beneficiaries of the plan and in a prudent fashion in accordance with section 404(a)(1)(B) of the Act; nor does it affect the requirement of section 401(a) of the Code that the plan must operate for the exclusive benefit of the employees of the employer maintaining the plan and their beneficiaries;

(2) This exemption is supplemental to and not in derogation of, any other provisions of the Act and/or the Code, including statutory or administrative exemptions and transactional rules. Furthermore, the fact that a transaction is subject to an administrative or statutory exemption is not dispositive of whether the transaction is in fact a prohibited transaction; and

(3) The availability of this exemption is subject to the express condition that the material facts and representations contained in the application accurately describe all material terms of the transaction which is the subject of the exemption.

Signed at Washington, DC, this 27th day of March 2012.

Lyssa E. Hall,

Acting Director of Exemption Determinations, Employee Benefits Security Administration, U.S. Department of Labor.

[FR Doc. 2012–7705 Filed 3–29–12; 8:45 am]

BILLING CODE 4510–29–P

DEPARTMENT OF LABOR

Employee Benefits Security Administration

Proposed Exemptions From Certain Prohibited Transaction Restrictions

AGENCY: Employee Benefits Security Administration, Labor.

ACTION: Notice of Proposed Exemptions.

SUMMARY: This document contains notices of pendency before the Department of Labor (the Department) of proposed exemptions from certain of the prohibited transaction restrictions of the Employee Retirement Income Security Act of 1974 (ERISA or the Act) and/or the Internal Revenue Code of 1986 (the Code). This notice includes the following proposed exemptions: D–11582, South Plains Financial, Inc. Employee Stock Ownership Plan (the Plan or the Applicant); and D–11668, TIB Financial Corp. Employee Stock Ownership Plan with 401(k) Provisions (the Plan).

DATES: All interested persons are invited to submit written comments or requests for a hearing on the pending exemptions, unless otherwise stated in the Notice of Proposed Exemption, within 45 days from the date of publication of this **Federal Register** Notice.

ADDRESSES: Comments and requests for a hearing should state: (1) The name, address, and telephone number of the person making the comment or request, and (2) the nature of the person's interest in the exemption and the manner in which the person would be adversely affected by the exemption. A request for a hearing must also state the issues to be addressed and include a general description of the evidence to be presented at the hearing.

All written comments and requests for a hearing (at least three copies) should be sent to the Employee Benefits Security Administration (EBSA), Office of Exemption Determinations, Room N–5700, U.S. Department of Labor, 200 Constitution Avenue NW., Washington, DC 20210. Attention: Application No. _____, stated in each Notice of Proposed Exemption. Interested persons are also invited to submit comments and/or hearing requests to EBSA via email or FAX. Any such comments or requests should be sent either by email to: *moffitt.betty@dol.gov,* or by FAX to (202) 219–0204 by the end of the scheduled comment period. The applications for exemption and the comments received will be available for public inspection in the Public Documents Room of the Employee Benefits Security Administration, U.S. Department of Labor, Room N–1513, 200 Constitution Avenue NW., Washington, DC 20210.

Warning: If you submit written comments or hearing requests, do not include any personally-identifiable or confidential business information that you do not want to be publicly-disclosed. All comments and hearing requests are posted on the Internet exactly as they are received, and they can be retrieved by most Internet search engines. The Department will make no deletions, modifications or redactions to the comments or hearing requests received, as they are public records.

SUPPLEMENTARY INFORMATION:

Notice to Interested Persons

Notice of the proposed exemptions will be provided to all interested persons in the manner agreed upon by the applicant and the Department within 15 days of the date of publication in the **Federal Register**. Such notice shall include a copy of the notice of proposed exemption as published in the **Federal Register** and shall inform interested persons of their right to comment and to request a hearing (where appropriate).

The proposed exemptions were requested in applications filed pursuant to section 408(a) of the Act and/or section 4975(c)(2) of the Code, and in accordance with procedures set forth in 29 CFR part 2570, Subpart B (76 FR 66637, 66644, October 27, 2011).[1] Effective December 31, 1978, section 102 of Reorganization Plan No. 4 of 1978, 5 U.S.C. App. 1 (1996), transferred the authority of the Secretary of the Treasury to issue exemptions of the type requested to the Secretary of Labor. Therefore, these notices of proposed exemption are issued solely by the Department.

The applications contain representations with regard to the proposed exemptions which are summarized below. Interested persons are referred to the applications on file with the Department for a complete statement of the facts and representations.

South Plains Financial, Inc. Employee Stock Ownership Plan (the Plan or the Applicant)

Located in Lubbock, TX [Application No. D–11582]

Proposed Exemption

Based on the facts and representations set forth in the application, the Department is considering granting an exemption under the authority of section 408(a) of the Act and section 4975(c)(2) of the Code and in accordance with the procedures set forth in 29 CFR part 2570, Subpart B (55 FR 32836, 32847, August 10, 1990).[2] If the exemption is granted, the restrictions of sections 406(a)(1)(A), (D) and (E), 406(a)(2), 406(b)(1) and (b)(2), 407(a)(1)(A) of the Act and the sanctions resulting from the application of section 4975 of the Code, by reason of section 4975(c)(1)(A), (D) and (E) of the Code, shall not apply, (1) effective December 17, 2008, to the acquisition and holding by the Plan of certain interests (the LLC Interests) in SPFI Investment Group, LLC (the LLC), a former wholly owned subsidiary of the Plan sponsor, South Plains Financial, Inc. (SPF), which were distributed (the Distribution) as dividends to the Plan as a shareholder of SPF; and (2) the proposed redemption (the Redemption) by the LLC of the LLC Interests held by the Plan, provided that the following conditions are met:

(a) The Plan's acquisition and holding of the LLC Interests occurred in connection with the Distribution, wherein the Plan acquired the LLC Interests automatically and without any action on its part.

(b) The Plan's acquisition of the LLC Interests resulted from an independent act of SPF as a corporate entity for business reasons which did not involve the Plan. As such, all shareholders of SPF, including the Plan, were treated in the same manner.

(c) The Plan paid no fees or commissions in connection with the acquisition and holding of the LLC Interests.

(d) Within ninety (90) days after publication of the notice granting the final exemption in the **Federal Register**, the LLC redeems the LLC Interests held by the Plan for no less than the greater of $1,036,665 or the fair market value of the LLC Interests on the date that the Redemption occurs.

(e) The Redemption is a one-time sale of the LLC Interests for cash.

(f) The terms and conditions of the Redemption are at least as favorable to the Plan as those obtainable in an arm's length transaction with an unrelated party.

(g) The Plan pays no commissions, costs or other expenses in connection with the Redemption.

(h) An independent fiduciary has approved the Redemption and monitors such transaction on behalf of the Plan.

Effective Date: If granted, this proposed exemption will be effective as of December 17, 2008, with respect to the acquisition and holding by the Plan of the LLC Interests. In addition, this

[1] The Department has considered exemption applications received prior to December 27, 2011 under the exemption procedures set forth in 29 CFR part 2570, Subpart B (55 FR 32836, 32847, August 10, 1990).

[2] For purposes of this proposed exemption, references to provisions of Title I of the Act, unless otherwise specified, refer also to corresponding provisions of the Code.

proposed exemption will be effective as of the date the final exemption is granted with respect to the LLC's Redemption of the LLC Interests held by the Plan.

Summary of Facts and Representations

SPF

1. SPF, the Plan sponsor, is located in Lubbock, Texas. SPF is a Texas corporation and registered bank holding company which conducts its principal activities through its subsidiaries' offices located throughout Texas and eastern New Mexico. SPF's principal activities include commercial and retail banking, along with insurance, investment, trust and mortgage services. SPF is currently taxed as a Subchapter S corporation for federal income tax purposes. Subsidiaries of SPF include the following entities: City Bank, Zia Financial Corporation, City Bank New Mexico and Windmark Insurance Agency, Inc. The subsidiaries of SPF are all adopting employers of the Plan.

2. Curtis Griffith, Cory Newsom, Ricky Neal, Kevin Bass, Lonnie Hollingsworth, Larry Beseda, Bobby Neal, Jodie Riley and Danny Campbell are the current directors (the SPF Directors) of SPF. Each of the SPF Directors is a shareholder of SPF except for Danny Campbell. Curtis Griffith, Kevin Bass, Cory Newsom, Sandy Wallace and Steve Crockett are the current officers of SPF (the SPF Officers).

The Plan

3. The Plan is an individual account plan as described in section 3(34) of the Act. The Plan includes an employee stock ownership plan (the ESOP Portion) and a cash or deferred arrangement (the 401(k) Portion). The ESOP Portion of the Plan is designed to invest primarily in qualifying employer securities pursuant to section 4975(e)(7) of the Code.

Participants' individual accounts are divided into sub-accounts, which include the following: (a) A Company Stock Account, which contains the shares of qualifying employer securities allocated pursuant to the ESOP Portion of the Plan; (b) an Other Investments Account, which contains the allocations of net gain of the Plan, forfeitures and employer contributions in other than the qualifying employer securities (the LLC Interests are held in a sub-account of a participant's Other Investments Account); (c) an Elective Account, which contains a participant's pre-tax elective deferrals and Roth elective deferrals (no part of the Elective Account is invested in qualifying employer securities); and (d) a Rollover Account, which contains distributions from other qualified retirement plans (no part of the Rollover Account is invested in qualifying employer securities).

Pursuant to an amendment to the Plan effective January 1, 2011, the ''ESOP Committee'' is the administrator of the Plan (the Plan Administrator). Curtis Griffith, Cory Newsom, Steve Crockett, Rob Dean, Larry Beseda and Raymond Richardson are the current members of the ''ESOP Committee''. SPF was the Plan Administrator prior to the ''ESOP Committee''.

4. City Bank is a Texas chartered bank subsidiary of SPF and adopting employer of the Plan.[3] Its trust department serves as a directed trustee (the Trustee) with respect to: (a) The Company Stock Account; (b) the participant-directed investments of participant elective contributions in the Elective Account; (c) the participant rollover contributions in the Rollover Account; and (d) the investment of SPF stock pursuant to direction from the Plan Administrator. The Trustee is also a discretionary trustee with respect to the investment of assets which are held in the Other Investments Account and which are not participant directed (*i.e.,* participant elective contributions in the Elective Account and rollover contributions in the Rollover Account). The Trustee follows the guidelines of the Funding and Investment Policy, but acts with discretion as to the time and manner of the implementation of such policy.

5. As of December 17, 2008, the date of the Distribution described herein, the Plan had a total of 953 participants[4] and assets with an approximate aggregate fair market value of $40,162,889 (excluding the value of the LLC Interests that were acquired that day). As of the same date, about 77.15% or $30,984,190 of the Plan's assets was invested in SPF stock. Also as of the same date, an estimated 882 Plan participants held a total of 99,949 shares of SPF stock, representing an approximately 24.05% ownership interest in SPF.

Of the 99,949 SPF shares held by the Plan, 70,280 shares were allocated to Plan participant accounts and 29,669 shares were held in an unallocated suspense account as collateral for certain non-recourse loans (the ESOP Loans)[5] to the Plan. The Applicant represents that the ESOP Loans were used to acquire qualifying employer securities and that such loans satisfy the statutory exemption provided under section 408(b)(3) of the Act.[6]

6. As of December 31, 2010, the Plan had a total of 1,026 participants and assets with an approximate aggregate fair market value of $33,315,524. As of the same date, 57% or $18,990,310 of the Plan's assets was invested in SPF stock. Also as of December 31, 2010, out of the 1,026 Plan participants, an estimated 964 Plan participants held a total of 79,828 shares of the 411,454 outstanding shares of SPF (which, together with the 24,895 shares of SPF held by the Plan in a suspense account, equaled 24.29% of SPF).

The Property

7. On November 19, 1991, City Bank purchased a parcel of improved real property located at 5219 City Bank Parkway (the Property) for $2,800,000 from CSM, Inc., an unrelated party. In October 1993, SPF acquired City Bank and City Bank's assets, including the Property for $4,900,000. SPF believed that the acquisition of City Bank and its assets was a prudent investment and would increase its West Texas presence.

8. The Property is an irregularly-shaped site that consists of 9.8762 acres of land, made up of the bank site at 8.9862 acres, and excess land of 0.89 acres. The Property is improved with a 3-story, multi-tenant office building containing 116,616 square feet (gross building area). Total net rentable area for the building is computed as 85,001 square feet. The building was

[3] City Bank directors (the City Bank Directors) include the SPF Directors. City Bank officers (the City Bank Officers) include Curtis Griffith, Mike Liner, Cory Newsom, and Kevin Bass, who are both SPF Directors and City Bank Directors.

[4] The Plan's participants also included and continue to include many of the officers and directors of the entities described herein.

[5] The Applicant represents that as of December 31, 2011, the ESOP portion of the Plan had two outstanding loans. The first loan, dated September 27, 2002, was made by Lubbock National Bank in the original amount of $5,999,928. Each principal payment is $600,000 and is due in January of each year. As of December 31, 2011, there was one principal payment remaining. The interest rate is the prime interest rate published in the Wall Street Journal with a floor of 5.15% and a ceiling of not more than 9% per annum. The interest projection for 2012 was approximately $8,000. As of December 31, 2011, the balance of the first loan was $599,822.

The second loan, dated May 25, 2007, was also made by Lubbock National Bank in the original amount of $6,767,360. Each principal payment is $676,735 and is due in January of each year. As of December 31, 2011, there was one principal payment remaining. The interest rate is a variable, per diem rate equal to the prime interest rate published in the Wall Street Journal less 50 basis points. As of December 31, 2011, the balance of that loan was $4,060,416. The Applicant represents that both loans have satisfied the requirements of section 408(b)(3) of the Act.

[6] The Department expresses no opinion herein regarding whether the conditions of section 408(b)(3) of the Act have been satisfied. In this regard, the Department notes that it is providing no relief for the ESOP Loans beyond that provided in the statutory exemption.

constructed in 1983 and has undergone numerous remodels over the years. The Property has been used for City Bank's main office in Lubbock, Texas since its acquisition.

The LLC

9. On November 12, 2008, City Bank formed the LLC, which is also located at 5219 City Bank Parkway, Lubbock, Texas, as a Texas limited liability company.[7] On December 10, 2008, City Bank contributed the Property to the LLC in exchange for 100% of the member interest in the LLC. The LLC was wholly owned by City Bank from December 10, 2008 to December 16, 2008. On December 16, 2008, City Bank distributed 100% of its member interest to SPF. Accordingly, SPF became the successor member to City Bank. The LLC was then wholly owned by SPF from December 16, 2008 until SPF distributed the LLC Interests to its shareholders on December 17, 2008. (See Representation 15.) Around the time of the Distribution, the LLC had cash assets totaling $696,643.

10. Since its formation, the LLC's principal business activity has been the rental and management of commercial real estate. The managers of the LLC (the LLC Managers) are Cory Newsom and Kevin Bass. In addition, members of the LLC include the SPF Directors, the SPF Officers, the City Bank Directors, and the City Bank Officers.

The Lease

11. By lease agreement (the Lease) dated December 16, 2008, City Bank and the LLC entered into a triple net, ten-year lease whereby City Bank leased the Property from the LLC[8] in order to continue using the Property as its main office space. The Lease requires monthly rental payments of $166,460.29 ($1,997,523.48 annually) or $23.50 per square foot from January 1, 2009 through December 31, 2013. Beginning on January 1, 2014 through December 31, 2018, the monthly rental payment will be $183,106.32 ($2,197,275.84 annually) or $25.85 per square foot. The Lease is subject to eight five-year renewal periods.

City Bank currently leases 100% of the office building on the Property from the LLC, and occupies about 60% of the office building, itself. City Bank subleases the remaining space in the office building that it does not occupy to unrelated tenants.

The Loan

12. A loan (the Loan) in the amount of $15,800,000 was entered into on December 16, 2008 between the LLC as borrower and Texas Capital Bank, National Association (TCB), a national banking association and third party lender, as both lender and administrative agent with respect to the Loan. The purpose of the Loan was to provide additional capital to City Bank. The Loan was evidenced by a credit agreement (the Credit Agreement), and an accompanying promissory note, both executed on December 16, 2008. The Credit Agreement provides that one or more lenders may make the Loan in an amount up to $15,800,000.

The terms of the Loan require that the unpaid principal balance bear interest at the rate per annum equal to the lesser of (a) the maximum rate of interest which may be charged, contracted for, taken, received or reserved by a lender in accordance with applicable Texas law (or applicable United States federal law to the extent that such law permits a lender to charge, contract for, receive or reserve a greater amount of interest than under Texas law) or (b) the rate of interest per annum quoted in the ''money Rates'' section of The Wall Street Journal from time to time and designated as the ''Prime Rate''. The terms of the Loan further require that the Loan be repaid in monthly installments of principal and interest in the amount of $120,000 each, due and payable on the first day of each calendar month beginning February 1, 2009, and continuing on the first day of each month thereafter through, and including, January 2, 2014.

13. TCB, as a lender, agreed to make the Loan provided that on or before March 31, 2009, either (a) additional lenders would become parties to the Loan and finance at least $3,000,000 of the Loan or buy at least $3,000,000 in participations in the Loan, or (b) the LLC would repay to TCB the difference between $3,000,000 and the amount of the Loan financed by other lenders.[9]

14. The Loan is collateralized by the Property. Pursuant to the Credit Agreement, TCB has a first lien Deed of Trust in the Property and an Assignment of Rents Paid pursuant to the Lease. The LLC uses the monthly Lease payments it receives from City Bank to repay the Loan. The LLC members are also not liable for the Loan in their individual capacities.

The Distribution

15. By letter dated December 15, 2008 (the Notice of Distribution), SPF notified its shareholders of the intended Distribution. In the Notice of Distribution, SPF explained that the purpose of the Distribution was to increase City Bank's capital by converting the Property into working capital that City Bank could leverage to increase its lending capabilities. In addition, SPF informed its shareholders of the Loan and Lease transactions, described above, and explained how the Loan proceeds would be used to increase City Bank's operating capital and liquidity, and how the Lease proceeds would be used to service the Loan, as well as provide distributions to the LLC members in an amount that would allow them to pay the individual tax liabilities resulting from their ownership of the LLC Interests. SPF was of the view that increasing City Bank's operating capital, and thus its liquidity, would allow City Bank to continue to grow and provide City Bank with a competitive advantage over its peer banks.

16. On December 16, 2008, City Bank distributed its LLC Interests to SPF. On December 17, 2008, SPF declared a pro rata Distribution of the LLC Interests to its shareholders of record as of that date.[10] The shareholders of SPF at the time of the Distribution collectively acquired 100% of the membership interests in the LLC at a book value of

[7] The Applicant notes that the Texas Business Organizations Code, which applies to all Texas limited liability companies registered to transact business in Texas, does not require, in connection with the formation of a new limited liability company, that a person be named as an initial member in the Certificate of Formation. Accordingly, at the time that the LLC was formed, no members were listed.

[8] The Applicant represents that the Lease is not a prohibited transaction. The Applicant states, in pertinent part, that the Departments regulations (see 29 CFR 2510.3–101(a)(2)) establish a ''look-through rule'' under which underlying assets of certain entities in which a plan may invest are regarded as plan assets. However, the Applicant explains, in pertinent part, that the ''look-through rule'' does not apply if the equity investment in the entity by a benefit plan is not significant. The Applicant further explains that equity participation by benefit plan investors is significant as of any date if benefit plan investors hold 25% or more of the value of any class of equity interest. The Applicant states that by its calculation the benefit plan investors have an equity interest of 24.599% in the LLC. Therefore, the Applicant represents that the underlying assets of the LLC are not considered plan assets of such benefit plan investors and the Lease is not a prohibited transaction.

The Department expresses no opinion herein on whether the underlying assets of the LLC are plan assets pursuant to 29 CFR 2510.3–101 and, accordingly, is not proposing any relief for the Lease.

[9] TCB sold a participation interest in the Loan to Founders Bank, SSB on or before March 31, 2009.

[10] Certain SPF Directors, SPF Officers, City Bank Directors, and City Bank Officers acquired LLC Interests in either or both their individual capacities and their capacities as Plan participants as a result of the Distribution. In addition, certain Plan participants (*e.g.,* new participants) did not have SPF shares allocated to their Plan accounts.

$721,500. Neither SPF nor City Bank retained any interest in the LLC.

17. The Distribution was an independent act of SPF as a corporate entity for business reasons which did not involve the Plan.[11] All shareholders of SPF were treated in the same manner. The Plan, as a shareholder of SPF stock, acquired the LLC Interests automatically, without any action on the part of the Plan, and in proportion to its ownership interests in SPF. As a result of the pro rata Distribution of the LLC Interests, the Plan received 24.05% of the outstanding membership interests in the LLC. At the Plan participant level, an estimated 882 participants received a total of 99,949 LLC Interests of the 415,509 outstanding LLC Interests.

According to the Plan's unaudited financial statement for December 31, 2008, the LLC Interests acquired by the Plan in the Distribution were valued at that time at $721,500. The Applicant represents that the value was determined by adding the total estimated current fair market value of the Property ($18,100,000), plus cash assets in the LLC ($700,000), subtracting the outstanding Loan on the Property in the amount of $15,800,000, resulting in an amount of $3,000,000, multiplied by the Plan's ownership percentage (24.05%), which equaled $721,500. The Plan paid no fees to SPF in connection with the Distribution.

18. Pursuant to an amendment to the Plan dated December 23, 2008, the LLC Interests have been held on behalf of the Plan in a sub-account of a Plan participant's ''Other Investments Account'' known as the Special Trust Fund.

Following the Distribution, each member of the LLC, other than the Plan, executed a Right of First Refusal Agreement.[12] The Right of First Refusal Agreement requires that each member of the LLC give the LLC, any assignee of the LLC and the other members of the LLC, in that order, a right to purchase the member's LLC Interest before it can be sold for the offered price, provided that the offered price is equal to fair market value, as defined in such agreement. Aside from the Plan, certificates (the Certificates) evidencing the LLC Interests were provided upon receipt by any one of the LLC Managers of the executed right of first refusal agreement from all those shareholders of SPF receiving LLC Interests. The Certificates were issues at different times. The Plan's Certificate, dated December 17, 2008 and evidencing its ownership of LLC Interests, was received and posted to the trust accounting system at Argent Trust Company of Louisiana (Argent Trust), the Plan's independent fiduciary, on June 2, 2009.[13]

The Funding and Investment Policy

19. On March 26, 2009, the SPF Directors considered and adopted a revised Funding and Investment Policy for the Plan in order to address the Plan's ownership of assets, such as the LLC Interests. Specifically, Section III of the Funding and Investment Policy was revised to provide that the Plan could not invest in any non-publicly traded securities other than SPF stock. In revising the Funding and Investment Policy, the SPF Directors considered, among other things, the Plan's ''investment'' in the LLC, how the LLC Interests affected the Plan and its design to be invested primarily in SPF stock, the Plan's liquidity needs, and its diversification requirements. Accordingly, the SPF Directors advised Argent Trust to sell the Plan's LLC Interests.[14]

On December 17, 2010, the SPF Directors adopted a revised Funding and Investment Policy for the Plan to once more address the Plan's ownership of the LLC Interests. Specifically, Section III of the Funding and Investment Policy was revised to provide that the Plan could not invest in any non-publicly traded securities other than SPF stock, except to the extent that Argent Trust, the Plan's independent fiduciary, determined that an investment in the LLC Interests was in the best interests of the Plan. In revising the Funding and Investment Policy, the SPF Directors decided the change was in the best interests of Plan participants so that there would be no question that the decision to sell the Plan's LLC Interests was being made solely in the interests of the participants and with the requisite prudence and diligence by an independent fiduciary.

On June 7, 2011, the Funding and Investment Policy was revised again by the ESOP Committee. However, no changes were made to Section III of such policy.

The Qualified Independent Fiduciary

20. By an Appointment of Trustee Agreement (the Appointment Agreement), executed on December 26, 2008 between Argent Trust and SPF on behalf of the Plan, Argent Trust became the Plan's independent fiduciary, effective December 19, 2008, with respect to the custody, management and sale of the Plan's LLC Interests to the LLC. Argent Trust, a subsidiary of Argent Financial Group, Inc. (AFG), is a privately held trust bank regulated by the United States Office of the Comptroller of Currency. Originating as the trust department of Ruston State Bank, Argent Trust has roots dating back to 1930. In 1990, the trust department of Ruston State Bank was transferred to an independent banking charter forming The Trust Company of Louisiana (TTCL). In 1991, certain individual shareholders of TTCL purchased TTCL and formed AFG as a holding company. TTCL obtained a national banking charter and the name was changed to National Independent Trust Company, with Argent Trust as a division of that company. As of December 31, 2010, Argent Trust had assets equal to $1,086,490,000, and five offices staffed with 24 professionals. For the year ended December 31, 2010, Argent Trust generated revenue of $4,245,062.

21. Argent Trust represents that it is qualified to act as independent fiduciary for the Plan because it has a long history of serving as a fiduciary and trustee to qualified plans. In this regard, Argent Trust has historically served, and currently does serve, as trustee of several ESOPs, primarily sponsored by financial institutions. These ESOPs include plans that are leveraged, plans for both closely-held and publically traded sponsors, plans that have had to file for change of control with the Federal Reserve System and plans for

[11] The Plan states that the primary purpose of the formation of the LLC, the Lease and the Loan transactions which resulted in the Distribution to the Plan was for SPF to realize the value of the Property which City Bank had owned for many years and which had appreciated. The transactions resulted in the conversion of the value of the Property into working capital that SPF could leverage to increase the capital levels of City Bank.

[12] The Applicant states that around the time of the Distribution, its attorney, Kimberly Wilkerson, advised SPF, as the employer and Plan Administrator at that time, not to sign the Right of First Refusal Agreement on behalf of the Plan and not to ask the Trustee to sign a Right of First Refusal on behalf of the Plan. Ms. Wilkerson explains that she was concerned that the granting of the Right of First Refusal could result in a prohibited transaction if the Assignee or another LLC member was a party in interest.

[13] The Applicant states that there is no particular reason that the Certificate was not issued to Argent Trust immediately following the Plan's receipt of LLC Interests in the Distribution. The Applicant further states that the LLC Managers believed the Certificate only evidenced ownership and that the date the Certificate was issued did not affect the Plan's ownership interest.

[14] The Department expresses no opinion herein as to whether the SPF Directors violated any of the general fiduciary responsibility provisions of Part 4 of Title I of the Act when, shortly following the Plan's acquisition of the LLC Interests, the SPF Directors specifically revised the Plan's Funding and Investment Policy to require that the Plan divest itself of such interests. However, the Department notes that section 404(a) of the Act requires, among other things, that a plan fiduciary act prudently and solely in the interest of the plan's participants and beneficiaries when making investment decisions on behalf of the plan.

sponsors who have converted corporate status to S–Corporations.

In the early 1990s, TTCL was the court-appointed trustee for a bank that went into receivership by the Federal Deposit Insurance Corporation (FDIC) and completed the termination process of the plan with the FDIC as the sponsor. Further, as part of its services, Argent Trust has assisted many of its client plans in responding to inquiries and investigations made by the Department.

22. Ann Marie Mills, Senior Vice President and Employee Benefits Manager for Argent Trust, is the officer assigned to represent the Segregated Trust Fund. Ms. Mills represents that she has 26 years of experience working with qualified plans and IRAs. In addition, Gary Moore, President of Argent Trust, has 30 years of trust experience, and D. Kyle McDonald, President and CEO of Argent Trust, has 26 years of trust experience.

Argent Trust confirms that it is independent of, and does not have any other business relationship with, SPF, City Bank, or the LLC. In addition, Argent Trust confirms that it derives less than one percent of its gross annual income, based on the previous year's income tax return, from SPF or its affiliates.

23. Pursuant to the Appointment Agreement, Argent Trust has the following responsibilities with respect to managing the Plan's Special Trust Fund: (a) To receive the LLC Interests on behalf of the Plan and to hold such interests until they are sold or otherwise conveyed; (b) to monitor the LLC Interests; (c) to receive any income derived from or distributions made with respect to the LLC Interests; (d) to exercise any rights of membership, including voting rights; (e) to invest the income derived from the LLC Interests as provided in the Appointment Agreement; (f) to pay any taxes or expenses assessed against the Special Trust Fund; (g) to appoint an independent appraiser to perform a valuation of the LLC Interests, with the understanding that more than one appraisal may be needed depending on the period between the filing of the application for a prohibited transaction exemption and the determination made by the Department; (h) to review and approve the independent appraisal of the LLC Interests; (i) to review the terms of any sale or other conveyance of the LLC Interests to confirm that they are consistent with an approval of the Plan's request for exemptive relief from the Department; and (j) to direct that the proceeds of any sale of the LLC Interests be transferred to the Primary Trustee, as defined in the Appointment Agreement (*i.e.,* the City Bank trust department).[15] In addition, to the extent that these functions and others listed in the Appointment Agreement would not in themselves have made Argent Trust a discretionary fiduciary with regard to the Plan's LLC Interests, Argent Trust has subsequently agreed to act as a discretionary fiduciary with respect to the Segregated Trust Fund. In that capacity, Argent Trust represents that it is its responsibility to determine if, when and on what terms the Plan's interests in the LLC may be sold, including approval of the purchaser.

24. In addition to performing its duties with respect to the management of the Plan's Special Trust Fund, as outlined in the Appointment Agreement described above, Argent Trust has reviewed the circumstances surrounding the Plan's acquisition of the LLC Interests and determined that it was in the best interests of the Plan participants to accept the Distribution of such LLC Interests. In a letter dated March 16, 2012, Argent Trust sets forth the following reasons for its opinion.

First, Argent Trust states that it was not feasible for the Applicant to obtain a prohibited transaction exemption before the Distribution was made, and believes that it is unrealistic to think that other shareholders would have abided a delay in their receipt of the LLC Interests given SPF's legal obligation to make the Distribution and its willingness to do so immediately. Argent Trust also states that both tax consequences to the shareholders and corporate governance issues for SPF would have been implicated in such a delay. Further, Argent Trust opines that such a delay could only have been undertaken if the Plan had been treated substantially less favorably than other shareholders, which would have prejudiced participants who received an immediate financial benefit from the receipt of the LLC Interests. In addition, Argent Trust opines that whatever the LLC Interests were worth, they were clearly worth something, and that the participants gave up no rights or value to acquire these interests. As such, Argent Trust believes that rejecting or even delaying acceptance of the LLC Interests would have been demonstrably prejudicial to the participants.

Second, Argent Trust states that the Plan's right to the receipt of the LLC Interests was inherent in its status as a shareholder of SPF, and to refuse acceptance of these LLC Interests would have violated such right. Further, Argent Trust represents that like other shareholders, the Plan had a legally and immediately enforceable right to receive the LLC Interests. In addition, Argent Trust represents that a rejection of the LLC Interests would have violated the Plan's right as a shareholder of SPF to receive the Distribution on the same basis as other SPF shareholders.

Third, Argent Trust represents that the Plan's receipt of the LLC Interests did not cost the Plan anything, but a rejection of the LLC Interests would have resulted in a denial of opportunity to the Plan without offsetting benefits to the Plan. Argent Trust explains that the Distribution of LLC Interests was a unilateral transfer of a valuable property right for which the Plan participants gave no consideration. As such, Argent Trust states that rejecting the LLC Interests would have clearly denied Plan participants the opportunity to gain from the value of such interests and given them nothing in exchange. In addition, Argent Trust opines that to the participants, accepting the Distribution of LLC Interests was all upside and rejecting the LLC Interests would have been all downside. Further, Argent Trusts states that traditionally, trustees have had the authority to abandon burdensome or worthless property. However, Argent Trust states that in the absence of any indication that the LLC Interests would be burdensome or were worthless, Argent Trust had a duty to accept the assets on behalf of Plan participants. Argent Trust opines that the LLC Interests clearly could not have been so perceived at the time of receipt and have not become so since then.

Accordingly, Argent Trust represents that acceptance of the LLC Interests was not only consistent with Argent Trust's fiduciary duties, it was required. In addition, Argent Trust believes that rejecting the LLC Interests would have been prejudicial to the best interests of Plan participants and contrary to Argent Trust's fiduciary duties.

25. Argent Trust, acting as the Plan's qualified, independent fiduciary, with respect to the Special Trust Fund, represents that it has exercised its discretion to determine that the Redemption by the LLC of the LLC Interests is in the best interest and protective of the rights of the Plan

[15] Argent Trust represents that as set forth in its Appointment Agreement, except for its receipt of the LLC Interests on behalf of the Plan, it did not participate in the deliberations, discussions or other steps leading up to SPF's decision to declare a dividend of the LLC Interests or any of the antecedent decisions related to the transactions involving SPF or the LLC or the Property. Argent Trust further notes that it was engaged to receive the LLC Interests on behalf of the Plan, and hold such interests until the earlier of the disposition of the LLC Interests following a decision by the Department on the issuance of a prohibited transaction exemption or Argent Trust's resignation or removal.

participants and beneficiaries. Specifically, Argent Trust opines that the proposed Redemption will allow the Plan to diversify its investments, improve its liquidity, and fulfill the Plan's primary purpose of investing in employer securities, and reduce its expenses. In addition, Argent Trust states that the Redemption will reduce the dependence of the Plan and its participants on a single enterprise and one locality.

Moreover, Argent Trust states that a final decision on whether it is in the best interests of the Plan participants to retain or sell the LLC Interests cannot be made until the Department grants exemptive relief for the Redemption. However, Argent Trust states that, based on the facts existing at that time, if it determines that an investment in the LLC Interests is not in the best interests of the Plan, disposing of the LLC Interests would be consistent with the most recent amendment to the Funding and Investment Policy.

Finally, Argent Trust represents that it will monitor the proposed Redemption through closing and delivery of funds to the Plan.

Request for Exemptive Relief

26. The Applicant states that section 406(a)(1)(E) of the Act prohibits a fiduciary from causing a plan to engage in a transaction which the fiduciary knows (or should know) constitutes the acquisition on behalf of the plan, of any employer security in violation of section 407(a). The Applicant believes that because the LLC was an affiliate of SPF for purposes of section 407(d)(7) of the Act at the time of the Distribution, the LLC Interests would constitute an ''employer security'' within the meaning of section 407(d)(1) of the Act but not a ''qualifying employer security'' under section 407(d)(5) of the Act, inasmuch as the LLC Interests did not fall within any of the covered categories. The Applicant opines that while the LLC is no longer a party in interest to the Plan, it is an entity in which the SPF officers and directors may have interests that would affect their best judgment as Plan fiduciaries.

Therefore, SPF states that exemptive relief is needed with respect to the acquisition and continued holding of the LLC Interests by the Plan to the extent there have been violations of sections 406(a), 406(b)(1) and 406(b)(2), and section 407(a) of the Act.

27. In addition, SPF represents that it is possible that the Redemption of the Plan's LLC Interests by the LLC will violate section 406(b)(1) and (b)(2) of the Act. In this regard, the Applicant notes that the LLC would no longer be considered a party in interest with respect to the Plan because City Bank and SPF have retained no interest in the LLC. However, the Applicant represents that the LLC Managers are participants in the Plan and Plan fiduciaries. Further, the Applicant states that the LLC Managers are members of the LLC in their individual capacities. Therefore, the Applicant believes that the Redemption of the Plan's LLC Interests by the LLC could affect the best judgment of these individuals as fiduciaries with respect to the Plan and it has requested exemptive relief from section 406(b)(1) and (b)(2) of the Act for this transaction.

28. Accordingly, SPF requests an administrative exemption from the Department with respect to the Plan's acquisition and holding of the LLC Interests and the proposed redemption of the Plan's LLC Interests by the LLC.

If granted, the exemption will be effective as of December 17, 2008, with respect to the acquisition and holding by the Plan of the LLC Interests. In addition, this exemption will be effective as of the date the final exemption is granted with respect to the LLC's Redemption of the Plan's LLC Interests.

The Appraisals

29. The Plan's LLC Interests have been appraised by John Seright, CPA/ABV, CFFA, and Woody Boyd, CPA/ABV, CVA (the LLC Appraisers) of Robinson Burdette Martin & Seright, L.L.P. (RBMS). RBMS is a full-service public accounting firm located in Lubbock, Texas. In a letter dated May 16, 2011, the LLC Appraisers certify that the valuation was performed on a basis of non-advocacy, that they have no present or contemplated interest in the property valued and have no personal bias with respect to the parties involved. Further, in a letter dated August 1, 2011, RMBS represents that it has derived less than 1% of its annual income from the parties in interest and related affiliates, which include SPF, City Bank, the LLC and the SPF Directors, for the years 2009 and 2010.

In connection with rendering this valuation, the LLC Appraisers considered, among other things, the following: (a) The Company Agreement of SPFI Investment Group, LLC dated December 10, 2008; (b) unaudited (''management prepared'') balance sheets and income statements; (c) restricted use real estate appraisal report; (d) economic statistics published by the government or other sources; and (e) information provided by SPF management.

30. The Property underlying the LLC Interests has been appraised by Gerald A. Teel, MAI, CRE and Michael G. Divin, Managing Partner (together, the Property Appraisers) of Blosser Appraisal (a Division of Gerald A. Teel Company, Inc.). Blosser Appraisal is located in Lubbock, Texas. Blosser Appraisal represents that it has derived less than 1% of its annual income from the parties in interest [16] with respect to the Plan and related affiliates for the years 2010 and 2011. In an independent appraisal dated April 27, 2011 (the 2011 Property Appraisal), the Property Appraisers updated a December 30, 2008 independent appraisal (the 2008 Property Appraisal) that was prepared by their firm, in which the Property's leased fee value and fair market rental value were placed at $18,100,000 and $23.50 per square foot, respectively, as of December 30, 2008. Using the Income Approach to valuation, the Property Appraisers determined that the Property had a leased fee value of $18,130,000 and a fair market rent value of $23.50 per square foot, as of April 27, 2011.

31. Taking into consideration the 2011 Property Appraisal, among the other factors listed above, in an independent appraisal dated May 16, 2011 (the 2011 LLC Appraisal), the LLC Appraisers updated a May 17, 2010 independent appraisal (the 2010 LLC Appraisal) that was prepared by their firm, in which the Plan's LLC Interests were valued at $826,868, as of March 31, 2010. Using the Cost (*i.e.,* Net Asset Value) Approach to valuation (with adjustments for lack of control and lack of marketability of the LLC Interests), the LLC Appraisers concluded that the Plan's LLC Interests, if valued on a ''Minority/Non-Managing Membership'' basis, had a fair market value of $1,036,665 as of March 31, 2011. The LLC Appraisers will update the 2011 LLC Appraisal on the date of the Redemption.

32. In addition, Joe Rainer of Argent Property Services, a separate subsidiary of AFG that provides support to Argent Trust accounts in matters of property management, among other things, has reviewed the appraisal reports prepared by the LLC Appraisers. Argent Trust represents that Mr. Rainer has 35 years of experience in this area, and that prior to joining AFG, Mr. Rainer served as Manager of Minerals and Taxes for Willamete Industries, Inc. Mr. Rainer states that the methods and procedures used in determining the fair market value of the Plan's LLC Interests are sound, accurate, and follow the

[16] Blosser Appraisal lists SPF, City Bank, the LLC and the SPF Directors as parties in interest.

accepted methods for business valuations. Mr. Rainer further states that, based on the data he reviewed, he agrees with the LLC Appraisers estimated value for the Plan's LLC Interests.

The Redemption

33. On the basis of the foregoing, within ninety (90) days after the publication of the notice granting the final exemption in the **Federal Register**, the LLC will redeem the LLC Interests held by the Plan for the greater of $1,036,655 or the fair market value of the LLC Interests on the date that the Redemption occurs. The proceeds of the Redemption will be reallocated by Employee Incentive Plans, Inc., a third party administrator, among Plan participants to their Other Investments Accounts in proportion to each such participant's ownership of LLC Interests at the time of the Redemption.[17]

34. In summary, it is represented that the transactions satisfied or will satisfy the statutory criteria for an exemption under section 408(a) of the Act because:

(a) The Plan's acquisition and holding of the LLC Interests occurred in connection with the Distribution, wherein the Plan acquired the LLC Interests automatically and without any action on its part.

(b) The Plan's acquisition of the LLC Interests resulted from an independent act of SPF as a corporate entity for business reasons which did not involve the Plan. As such, all shareholders of SPF, including the Plan, were treated in the same manner.

(c) The Plan paid no fees or commissions in connection with the acquisition and holding of the Interests.

(d) Within ninety (90) days after publication of the notice granting the final exemption in the **Federal Register**, the LLC will redeem the LLC Interests held by the Plan for no less than the greater of $1,036,665 or the fair market value of the LLC Interests on the date that the Redemption occurs.

(e) The Redemption will be a one-time sale of the LLC Interests for cash.

(f) The terms and conditions of the Redemption will be at least as favorable to the Plan as those obtainable in an arm's length transaction with an unrelated party.

(g) The Plan will pay no commissions, costs or other expenses in connection with the Redemption.

(h) An independent fiduciary has approved the Redemption and will monitor such transaction on behalf of the Plan.

Notice to Interested Persons

The Applicant will provide notice of the proposed exemption within ten (10) days of the date of publication of the notice of proposed exemption in the **Federal Register** to all interested persons who are actively employed Plan participants by electronic mail with receipt of delivery requested, and to all other interested persons via first class mail. Such notice will include a copy of the proposed exemption, as published in the **Federal Register**, and a supplemental statement, as required pursuant to 29 CFR 2570.43(b)(2). The supplemental statement will inform interested persons of their right to comment on and/or to request a hearing with respect to the proposed exemption. Comments regarding the proposed exemption and requests for a public hearing are due within forty (40) days of the date of publication of the notice of pendency in the **Federal Register**.

FOR FURTHER INFORMATION CONTACT: Ms. Anna Mpras Vaughan of the Department, telephone (202) 693–8565. (This is not a toll-free number.)

TIB Financial Corp. Employee Stock Ownership Plan With 401(k) Provisions (the Plan)

Located in Naples, Florida

[Application No. D–11668]

Proposed Exemption

The Department is considering granting an exemption under the authority of section 408(a) of the Act and section 4975(c)(2) of the Code and in accordance with the procedures set forth in 29 CFR part 2570, Subpart B (55 FR 32836, 32847, August 10, 1990).[18] If the exemption is granted, the restrictions of sections 406(a)(1)(A) and (E), 406(a)(2), 406(b)(1), 406(b)(2), and 407(a) of the Act and the sanctions resulting from the application of section 4975(c)(1)(A) and (E) of the Code, shall not apply, effective December 17, 2010 through January 18, 2011, to: (1) The acquisition of certain stock rights (the Rights) by the Plan in connection with, and under the terms and conditions of, a Rights offering (the Offering) by TIB Financial Corp. (TIB or the Applicant), the Plan sponsor and a party in interest with respect to the Plan, and (2) the holding of the Rights by the Plan during the subscription period of the Offering; provided that the following conditions were met:

(a) The receipt of the Rights by the Plan occurred pursuant to Plan provisions for individually directed investments of such accounts, in connection with the Offering, and was made available by TIB on the same terms to all shareholders of record (the Shareholders) of TIB's common stock (Common Stock) as of 4:01 p.m., New York City time, on July 12, 2010 (the Record Date);

(b) The acquisition of the Rights by the Plan resulted from an independent act of TIB as a corporate entity, and all holders of the Rights, including the Plan, were treated in the same manner with respect to such acquisition;

(c) All Shareholders of Common Stock, including the Plan, received the same proportionate number of Rights based on the number of shares of Common Stock held by such Shareholders;

(d) All decisions regarding the Rights held by the Plan were made by the individual Plan participants (Participants) whose accounts in the Plan received the Rights pursuant to the Offering, in accordance with the provisions under the Plan for individually-directed investment of such account; and

(e) The Plan did not pay any fees or commissions in connection with the acquisition and or holding of the Rights.

Effective Date: This proposed exemption, if granted, will be effective from December 17, 2010, through and including January 18, 2011.

Summary of Facts and Representations

Background

1. TIB is a bank holding company organized in February 1996 under the laws of the State of Florida with its principal place of business in Naples, Florida. Its operating subsidiaries consist of TIB Bank (which commenced its commercial banking operations in Islamorada, Florida in 1974) and Naples Capital Advisors, Inc. (which commenced its investment advisory services in Naples, Florida in 2007). TIB and TIB Bank have 27 full-service banking offices in Florida which are located in Monroe, Miami-Dade, Collier, Lee, and Sarasota counties. TIB Bank serves over 60,000 customers in these five counties. As of September 30, 2010, TIB Bank had approximately $1.74 billion in total assets, $1.33 billion in total deposits, $1.02 billion in total loans and $177 million in shareholders' equity. TIB's investment advisory firm, Naples Capital Advisors, Inc., is a Registered Investment Advisor under

[17] The Plan holds the LLC Interests as a pooled investment. Each Plan participant's 'share' of the pooled investment in the LLC is generally based on the ratio of SPF stock allocated to the participant's account to the total number of allocated SPF stock.

[18] For purposes of this proposed exemption, references to the provisions of Title I of the Act, unless otherwise specified, refer also to the corresponding provisions of the Code.

the Investment Advisers Act of 1940 that manages assets for high net worth clients.

2. TIB sponsors the Plan for the benefit of its employees and the employees of its subsidiaries and such individuals' beneficiaries. The Plan is an employee stock ownership plan containing a 401(k) cash or deferred arrangement under section 401(a) of the Code and is designed to be an employee stock ownership plan under section 4975(e)(7) of the Code. The Plan provides for regular pre-tax employee 401(k) contributions and employer-paid matching and profit-sharing contributions. According to the Applicant, as of January 27, 2012, the Plan had 377 Participants and approximately $6,498,826 in net assets. The Plan allows its Participants to self-direct the investment of their accounts and is intended to operate in accordance with section 404(c) of the Act. Pursuant to a trust agreement (the Trust Agreement) between TIB and Reliance Trust Company, Inc. (the Trustee), dated April 16, 2002, the Trustee serves as the Plan's trustee.

3. The Plan's investment options include a wide variety of mutual funds from which Participants may choose to invest. In addition, Participants may invest amounts held in their Plan accounts in the TIB Financial Corp. Employer Stock Fund (the TIB Stock Fund). The TIB Stock Fund allows Participants to invest in shares of the same class of Common Stock that is available to all other investors. Furthermore, the Plan's terms require that the TIB Stock Fund will be offered as an investment option, but investment in that fund by Participants is entirely voluntary.

4. The Applicant explains that neither TIB nor its subsidiaries contribute Common Stock to the Plan. Instead, all employer contributions are made in cash, and Common Stock is acquired for the Plan only as a result of Participant-directed investment decisions. The Applicant explains that, upon the direction from a Participant to invest in the TIB Stock Fund, the Trustee purchases the Common Stock on the open market at the prevailing market price. The Trustee acts only as a directed trustee with respect to all Plan investments and, as such, is required to carry out Participants' directions regarding investing in the TIB Stock Fund.

The Plan's administrator, Ingham Retirement Group, has the responsibility of coordinating with the Trustee as to the administrative procedures to implement Participant investment decisions regarding Common Stock but otherwise has no authority with respect to the TIB Stock Fund. Upon the settlement of the trade implementing a Participant's direction to invest in the TIB Stock Fund, the Trustee becomes the Shareholder of record and the Participant becomes the beneficial owner. With respect to voting, the Plan provides for full pass-through voting of Common Stock to the Participants.

5. As of December 17, 2010, the date of commencement of the Offering (the Commencement Date), there were 371 active Participants and 71 terminated Participants who still had funds remaining in the Plan. The Plan's assets totaled $8,302,093, and 167 Participants held shares in the TIB Stock Fund (38 of these 167 were terminated Participants who still had funds remaining in the Plan at the time). Therefore, as of the Commencement Date, the Plan held 4,477 shares of Common Stock, or approximately 0.04% of the then outstanding shares of Common Stock, with a value of approximately $154,457 based on its closing price on the NASDAQ of $34.50, or approximately 2% of Plan assets.

The Investment Agreement

6. On June 29, 2010, TIB entered into an Investment Agreement (the Investment Agreement) with TIB Bank and North American Financial Holdings, Inc. (NAFH), an unrelated third party. According to the Applicant, at the time the Investment Agreement was entered into, TIB was facing financial challenges and potential regulatory actions as a result of the credit crisis and therefore was pursuing strategic alternatives to recapitalize its banking subsidiary. The Applicant explains that the potential regulatory action involved the delisting of TIB's common stock from the NASDAQ, since at the time, TIB's stock price had fallen below the NASDAQ's $1.00 minimum required bid price. Thus, TIB determined that a potential investment by NAFH would permit TIB to obtain needed capital and continue to operate and was therefore in the best interests of its shareholders and other constituencies.

7. On September 30, 2010, TIB completed the issuance and sale to NAFH of 7,000,000 shares of Common Stock, 70,000 shares of mandatorily convertible participating voting Series B Preferred Stock (the Preferred Stock) and a warrant to purchase up to 11,666,667 shares of Common Stock of TIB for aggregate consideration of $175 million (the Warrant). The consideration consisted of approximately $162.8 million in cash and a contribution worth approximately $12.2 million of all 37,000 outstanding shares of Series A Preferred Stock previously issued to the United States Department of the Treasury under the Troubled Asset Relief Program Capital Purchase Program (TARP) and a related warrant to purchase shares of Common Stock (the TARP Warrant), which NAFH purchased directly from the Treasury. The Series A Preferred Stock and the TARP Warrant were retired by TIB on September 30, 2010 and are no longer outstanding. The 70,000 shares of Preferred Stock received by NAFH automatically converted into an aggregate of 4,666,667 shares of Common Stock on December 1, 2010. The Warrant is exercisable, in whole or in part, and from time to time, from September 30, 2010 to March 30, 2012, at an exercise price of $15.00 per share, subject to anti-dilution adjustments.[19]

As a result of the NAFH investment, NAFH owned approximately 99% of TIB's Common Stock, and TIB became a controlled subsidiary of NAFH. Further, the operating entities below NAFH and TIB have all been merged so TIB is an intermediate holding company.

8. Furthermore, following the closing of the sale to NAFH of Common Stock and the Preferred Stock and TIB's issuance of the Warrant to NAFH, the Investment Agreement provided that TIB would commence a stock rights offering. According to the Applicant, the Offering was conducted in order to raise equity capital and provide existing Shareholders with the opportunity to increase their ownership of shares of Common Stock following the completion of the investment by NAFH.

The Offering

9. Pursuant to the terms of the Offering, which commenced on December 17, 2010, TIB distributed at no charge, nontransferable Rights to Shareholders, in the aggregate, to purchase up to 1,488,792 shares of Common Stock. Each Shareholder received ten Rights for each share of Common Stock held as of the Record Date (i.e., July 12, 2010). Of the Participants who held shares in the TIB Stock Fund as of the Record Date, 183 received rights to purchase Common Stock in the Offering. Of these 183 Participants, 49 were terminated Participants who still had funds remaining in the Plan at the time.[20]

[19] The Applicant states that, as of February 1, 2012, the Warrant had not been exercised.

[20] The Applicant notes that the difference between the number of Participants holding Common Stock in their Plan accounts as of the Record Date (183) and the Commencement Date

Continued

10. Each Right held by a Shareholder entitled the Shareholder to purchase one one-hundredth (1/100th) of a share of Common Stock at a subscription price of $15.00 per full share (the Subscription Price). In this regard, the Applicant explains that the Investment Agreement required the Subscription Price to be $0.15 per share of Common Stock, which, adjusted for a 100-to-1 reverse stock split that TIB effected after the close of business on December 15, 2010, constituted the $15.00 per share Subscription Price in the Offering. According to the Applicant, the Subscription Price was not necessarily related to TIB's book value, results of operations, cash flows, financial condition or the future market value of Common Stock, but rather was the price negotiated and established in the Investment Agreement.

11. According to the Applicant, in connection with the Offering, TIB did not charge any fees or sales commissions to issue Rights to a Shareholder or to issue shares of Common Stock to a Shareholder if the Shareholder exercised his or her Rights. The Applicant states further that there was no over-subscription privilege associated with the Offering and no party provided a backstop for the Offering. Finally, the Applicant notes that no Shareholder had the opportunity to purchase additional shares not purchased by other Shareholders pursuant to such other Shareholders' subscription privileges. A Shareholder was entitled to exercise their subscription privilege for some or all of his or her Rights, or the Shareholder could choose not to exercise any portion of their subscription privilege.

12. The Applicant states that the Offering and all Rights were originally scheduled to expire at 5 p.m., New York City time, on January 10, 2011 (the Original Shareholder Expiration Date). However, pursuant to the terms of the Offering, TIB extended the Offering until 5 p.m., New York City time, January 18, 2011 (the Shareholder Expiration Date). According to the Applicant, therefore, Shareholders were informed that they would need to complete their subscription rights election form properly and deliver it, along with the full payment amount in respect of the number of Rights they wished to exercise at the Subscription Price (the Subscription Payment), to the subscription agent, American Stock Transfer & Trust Company, LLC (the Subscription Agent) before 5 p.m. on the Shareholder Expiration Date. All required documents and payment were required to be received prior to the Shareholder Expiration Date. After 5 p.m. on the Shareholder Expiration Date, all unexercised subscription rights became null and void. Other than the extension of the Original Shareholder Expiration Date, the Applicant states that all of the Offering terms described in TIB's prospectus dated December 17, 2010 remained the same and applied during the subscription period of the Offering (including the extension thereof).

13. The Applicant states that the shares of Common Stock issued in connection with the Offering are currently listed on the NASDAQ Capital Market, and have been so listed since they were issued in connection with the Offering.[21] The Rights themselves, however, could not be sold, transferred or assigned and, consequently, were not listed for trading on any exchange. The Applicant represents that the TIB Board of Directors did not make any recommendations to the Shareholders regarding whether they should exercise their Rights but urged Shareholders to make independent decisions based on their assessment of TIB's business and the risk factors associated with a rights offering.

14. According to the Applicant, since the Plan held shares of Common Stock on the Record Date, the Plan and its Participants were required to be treated the same as the other Shareholders in the Offering. Furthermore, to comply with Florida law, TIB was required to distribute Rights to all Shareholders on a pro rata basis, and the Applicant states that it could not issue Rights to some Shareholders, but not to others. Had the Plan been denied participation in the Offering, the Applicant notes that Participants who owned Common Stock in the TIB Stock Fund as of the Record Date would not have been treated equally to Shareholders outside the Plan, and they would have been denied the opportunity to purchase additional shares at the Subscription Price.

Consequently, in the Offering, the Plan received Rights based on the number of shares of Common Stock that it held as of the Record Date, and in turn, the Rights were allocated to Participants based on the number of shares of Common Stock that were credited to Participants' Plan accounts as of the Record Date. The Plan held the Rights until they either were exercised by Participants or expired on the Shareholder Expiration Date. The Plan accounts of Participants who had invested in the TIB Stock Fund on the Record Date were allocated the same proportion of Rights and the same information regarding the Offering as other Shareholders.

Request for Exemptive Relief

15. Although the Rights satisfy the definition of ''employer securities'' under section 407(d)(1) of the Act, i.e., ''security[ies] issued by an employer of employees covered by the plan, or by an affiliate of such employer,'' the Applicant states that the Rights are not ''qualifying employer securities'' within the meaning of section 407(d)(5) of the Act. Section 407(d)(5) defines the term ''qualifying employer security'' as an employer security which is stock, a marketable obligation, or an interest in a publicly traded partnership (provided such partnership is an existing partnership as defined in the Code). Under section 407(a)(1) of the Act, a plan may not acquire or hold any ''employer security'' which is not a ''qualifying employer security.'' Moreover, section 406(a)(1)(E) of the Act prohibits the acquisition, on behalf of a plan, of any ''employer security in violation of section 407(a)(1) of the Act. Finally, section 406(a)(2) of the Act prohibits a fiduciary who has the authority or discretion to control or manage the assets of a plan to permit the plan to hold any ''employer security'' that violates section 407(a) of the Act. According to the Applicant, a prohibited transaction occurs either directly or indirectly as a result of the Plan holding Rights that are not ''qualifying employer securities'' and making them available to Participants.

Therefore, the Applicant requests an administrative exemption from the Department, effective December 17, 2010 until January 18, 2011, with respect to the acquisition and holding of the Rights by the Plan.

Exercise of the Rights

16. Pursuant to the terms of the Offering, each Right held by a Shareholder entitled the Shareholder to purchase one one-hundredth (1/100th) of a share of Common Stock at the Subscription Price of $15.00 per full share, which was below the public trading price of Common Stock at the close of the market on the

(167) was caused by terminated employees who either had their Plan account balances paid out or rolled over to a different plan (a New Plan) during such interim period.

[21] The Applicant notes that, as of the Commencement Date, the price of Common Stock was listed on the NASDAQ Global Select Market, but due to non-compliance with certain listing standards, NASDAQ granted TIB's request for its listing to be moved to the NASDAQ Capital Market, which occurred on January 27, 2011, several days after the January 18, 2011 closing date of the Offering.

Commencement Date.[22] The Applicant explains that, for example, if a Shareholder owned 955 pre-split shares of Common Stock on the Record Date, a Shareholder would receive 9,550 Rights and would have the right to purchase 95 shares of Common Stock (rounded down from 95.5 shares, with the total Subscription Payment being adjusted accordingly) at the Subscription Price, subject to an overall beneficial ownership limit of 4.9%.

17. As noted above, the Applicant represents that the Shareholders were permitted to exercise all, some or none of their Rights, but Shareholders could only exercise Rights in whole numbers of shares. Fractional shares of Common Stock that resulted from the exercise of the subscription privilege were eliminated by rounding down to the nearest whole share, with the total Subscription Payment being adjusted accordingly. Any excess Subscription Payments received by the Subscription Agent were returned, without interest, as soon as practicable.

18. According to the Applicant, the Rights were nontransferable, and any Rights that were not exercised by a Shareholder simply expired. Furthermore, an election to exercise a Right was irrevocable once made. The Applicant states that TIB did not charge any fees or sales commissions to issue the Rights or to issue shares to those who exercised their Rights. However, if Shareholders exercised Rights through a broker or other holder of their shares of Common Stock, the Shareholders were responsible for paying any fees that person may have charged. However, no fees or expenses were paid by the Plan.

The Applicant explains that, to exercise Rights, a Shareholder generally was required to properly complete a subscription rights election form and deliver it, along with the full Subscription Payment, to the Subscription Agent, before 5 p.m., New York City time, on the Shareholder Expiration Date of January 18, 2011. Further, Shareholders holding their shares in street name or through brokers exercised their rights through their brokers.

19. However, as explained by the Applicant, the process by which a Participant could exercise their Rights was different from that of other Shareholders.[23] The Applicant states that Participants were mailed a special notice entitled ''Instructions for Participants in the TIB Financial Corp. Employee Stock Ownership Plan with 401(k) Provisions—Important Information on the TIB Financial Corp. Rights Offering,'' (the 401(k) Participant Instructions) that, in nontechnical language, described the Offering and provided instructions to Participants who wanted to exercise the Rights that were allocated to their Plan accounts. Furthermore, the Participants were provided with a special election form to exercise their subscription rights, called the ''TIB Financial Corp. Employee Stock Ownership Plan with 401(k) Provisions Non-Transferable Subscription Rights Election Form,'' (the 401(k) Participant Election Form) and a prospectus that was provided to all Shareholders that described the Offering in more detail.

20. The Applicant explains that the 401(k) Participant Instructions and the prospectus were intended to provide Participants with the information necessary to understand the Offering. In addition, the Applicant states that the 401(k) Participant Election Form was intended to provide Participants with the information they required in order to file the election properly and to ensure that the Participant's directions with respect to the exercise of Rights were clear enough to avoid clerical or administrative problems.

21. Accordingly, if a Participant held shares of Common Stock in his or her Plan account as of the Record Date, the Participant was entitled to exercise the Rights with respect to those shares of Common Stock by electing what amount (if any) of Rights that he or she wanted to exercise by properly completing the 401(k) Participant Election Form described above. The Applicant explains that a Participant was required to return his or her properly completed 401(k) Participant Election Form to the Ingham Retirement Group by 5 p.m., New York City time on January 12, 2011 (the Participant Expiration Date). According to the Applicant, the Participant Expiration Date was six business days earlier than the Shareholder Expiration Date, because the Trustee, the Subscription Agent for the Offering and the Plan's recordkeeper, trustee, custodian and the clearing agency for the Offering required additional time to process Participants' elections to exercise their Rights, tabulate and confirm the results, liquidate the Participants' funds, confirm the orders and the availability of the funds and remit payment to purchase the shares.[24]

22. According to the Applicant, if a Participant's 401(k) Participant Election Form was not received by the Participant Expiration Date, any election to exercise the Participant's Rights held in his or her Plan account was not effective and any Rights credited to the Participant's Plan account expired. The Applicant states that, prior to the extension of the subscription period of the Offering, if a Participant elected to exercise some or all of the Rights in his or her Plan account, the Participant was also required to ensure that the total amount of the funds required for such exercise had been allocated to the Fidelity Retirement Money Market Fund (the Money Market Fund) in his or her Plan account by 4 p.m., New York City time, on January 4, 2011 and such amount remained in the Money Market Fund until liquidated into cash (which occurred on January 6, 2011). Pursuant to the extension of the subscription period of the Offering, Participants were given a second chance to exercise their Rights,[25] and the total amount of the funds required for such exercise in the extended subscription period was required to have been allocated to the Money Market Fund in a Participant's Plan account by 4 p.m., New York City time, on January 12, 2011. The Applicant states that, during the Offering, a total of thirty Participants exercised their Rights to purchase shares of Common Stock.

23. The Applicant states that Participants were instructed not to remit any payments to the Subscription Agent. Instead, Participants were

[22] On December 17, 2010, the closing trading price of Common Stock was $34.50, as listed on the NASDAQ Global Select Market.

[23] The Applicant states that each Participant who terminated employment and either had their Plan account balance paid out or rolled over to a New Plan, was sent their Rights by TIB to the address that such Participant directed their Plan distribution be sent. According to the Applicant, it did not see any impediments to allowing Participants whose accounts were rolled over or paid out during the period between the Record Date and the Commencement Date, to participate in the Offering, and TIB implemented a process to treat such Participants in the same manner as all other Shareholders (subject, if applicable, to the New Plan's administrative procedures).

[24] The Applicant states that the original expiration date for Participants was January 4, 2011 (the Original Participant Expiration Date), but the expiration date was later extended to the Participant Expiration Date, January 12, 2011, when the Offering was extended.

[25] The Applicant notes that, because the extension of the subscription period of the Offering was announced after the Original Participant Expiration Date had occurred, Participants in the Plan who had already submitted 401(k) Participant Election Forms electing to subscribe and allocated sufficient funds to the Money Market Fund were deemed to have irrevocably exercised their right to participate in the Offering as of the Original Participant Expiration Date. Upon the extension of the subscription period of the Offering, Participants who had not yet elected to participate were given a second chance to make their election to participate, up to the Participant Expiration Date, but no Participant who elected to participate upon the Original Participant Expiration Date was allowed to withdraw their participation.

required to have enough money available in their Money Market Fund accounts by the Original Participant Expiration Date and the Participant Expiration Date to satisfy the Subscription Payment for the Rights they elected to exercise. The Applicant notes that, by taking funds from Participants' Money Market Funds, the Trustee effectively allowed Participants to choose which of their Plan investments they wanted to use to pay for their shares. In this regard, the Applicant explains, only the Participants' Money Market Fund accounts would be liquidated, rather than a pro-rata portion of each of the funds in which Participants were invested.[26] The Applicant explains further that, because Participants were initially not likely to have sufficient funds in their Money Market Fund accounts, the 401(k) Participant Instructions provided detailed instructions about how the Participant could transfer money into the Money Market Fund from the other investment funds held in the Participant's Plan account. Thus, Participants were not forced to liquidate a portion of every fund in which they wished to remain invested at their current levels, but could select the portion(s) of particular funds to liquidate (with the exception of their Money Market Funds, which was used to pay for the exercise of the Rights).

24. Accordingly, the Applicant explains, as soon as practicable after each of the Original Participant Expiration Time and the Participant Expiration Time, the Money Market Fund accounts of the Participants exercising rights[27] were liquidated to generate funds sufficient to cover the Participants' Subscription Payments for their Rights.[28] The Applicant notes that, if a Participant did not have enough money in their Money Market Fund, the Trustee (as instructed by TIB) did not exercise that Participant's Rights. Once the Trustee was finished liquidating funds after the Participant Expiration Time, it lifted the freeze on the Money Market Fund.

25. The Applicant states further that the Offering provided that no Rights held by the Plan would have been exercised if the per share closing price of Common Stock on Friday, January 14, 2011 (one business day before the Shareholder Expiration Date)[29] of $19.51, as reported by the NASDAQ (the Closing Price), was not greater than or equal to the Subscription Price.[30] In this regard, pursuant to the Letter Agreement, dated December 23, 2010 between TIB and the Trustee, TIB was required to notify the Trustee in writing (the Final Instruction) (i) of the elections of Participants, (ii) whether the Closing Price on January 14, 2011 was equal to or exceeded $15.00 per share and (iii) of TIB's direction that the Trustee either: (a) Exercise that number of Rights held by the Trustee pursuant to the Trust Agreement on behalf of the Plan, and to purchase that number of shares of Common Stock, set forth in the Final Instruction; or (b) not exercise any Rights pursuant to the Rights Offering on behalf of the Plan or Participants.

26. If the Trustee exercised the Participants' Rights, the Trustee was required to direct the custodian for the Plan to remit the Participants' money, obtained from the liquidation of the Money Market Fund accounts of the applicable exercising Participants, to the Subscription Agent. The Subscription Agent then exercised the Rights held by the Plan, issued the shares of Common Stock to the Plan, and the Trustee credited the Participants' TIB Stock Fund with the acquired shares.

The Merits of the Transaction

27. The Applicant states that the requested exemption is administratively feasible, because there was no need or reason for the Department to have monitored or supervised the covered transactions. The Applicant explains that, under the Investment Agreement, TIB was obligated to undertake (and did undertake) the Offering to allow its Shareholders to purchase additional shares of Common Stock at the stated Subscription Price, which was below the stock's market price. Furthermore, according to the Applicant, it was not feasible for TIB to obtain an individual prohibited transaction exemption before proceeding with the Offering within the timeframe set forth in the Investment Agreement.

28. The Applicant states that the requested exemption is in the interest of the Plan and its Participants and beneficiaries because the Participants had an opportunity, provided at no cost, to purchase Common Stock if they believed the terms of a purchase were favorable. Furthermore, according to the Applicant, the investment opportunity that was provided to Participants resulted in an immediate financial gain for the Participants who elected to exercise their Rights in the Offering, as they were given the opportunity to purchase shares of Common Stock worth $19.51 per share at a price of $15.00 per share. Therefore, according to the Applicant, proceeding with the exemption transaction allowed the Participants who chose to participate in the Offering to purchase additional TIB shares below the market price, at an immediate gain of $4.51 per share.

Furthermore, the Applicant represents that TIB and the Plan entered into the covered transactions because not doing so would have violated the legal rights that Participants have as investors in Common Stock and as holders of Common Stock (through their Plan accounts) by, in effect, converting the Common Stock they held in their Plan accounts into a different, and inferior, class of Common Stock that did not have subscription rights under the Offering. Additionally, the Applicant states that, because the Plan and its Participants received the Rights at no cost, denial of the exemption would cause the Participants to lose an economic opportunity without any offsetting benefit. Further, to the extent other Shareholders exercised their Rights at below market prices, the Applicant notes that such exercise would be dilutive of the holdings of Participants.

The Applicant suggests further that denying the Plan the ability to participate in the Offering would have raised questions whether other violations of the Act had occurred, since the Participants had previously purchased their shares at full value, but as a result of being denied the ability to participate, they would have obviously overpaid for those shares. Furthermore, if TIB had excluded the Plan and its Participants from the Offering, TIB's other Shareholders would have received a benefit at a cost to the Plan and the Participants, thus receiving the benefit of not incurring the dilution of their shares when Participants participated in the Offering. Finally, according to the Applicant, omitting the Plan from the Offering would have violated the terms of the Plan and Trust Agreement which provided that distributions with respect

[26] The Applicant notes that the terms of the Offering specifically provided for this process, and such process is also consistent with the terms of the Plan provisions for individually-directed investment of the Participant account.

[27] The Applicant states that the reason behind freezing the Participants' Money Market Fund accounts was to prevent the Participants from moving money out of that fund after the Original Participant Expiration Date and Participant Expiration Date lapsed but before the Trustee could liquidate it.

[28] Funds from the liquidation of the Money Market Fund after the Original Participant Expiration Date were held in cash at an account at Fidelity Institutional, the custodian for the account.

[29] Monday, January 17, 2011 was a holiday (Birthday of Martin Luther King, Jr.).

[30] As noted above, the Subscription Price was equal to $15.00 per share.

to shares of Common Stock should be passed through to the accounts of Participants.

29. The Applicant states that the requested exemption is protective of the rights of Participants and beneficiaries because they had the opportunity, at their own discretion, to participate in the Offering on the same terms as every other Shareholder. The Applicant stresses that Participants and their beneficiaries had no obligation to exercise their Rights, and in fact could not exercise their Rights if the Subscription Price was below the Closing Price on January 14, 2011 (any Rights not exercised by the Participants simply expired). The Applicant states that the terms of the Offering were described to the Participants in clearly written communications, namely the 401(k) Participant Instructions and the 401(k) Participant Election Form, and that the decision by Participants to exercise Rights held in their Plan Accounts of the Participants in the Offering was strictly voluntary. Finally, the Applicant notes that neither TIB nor any of the Plan fiduciaries placed any pressure on Participants to exercise their Rights in the Offering or otherwise attempted to influence their decision, and the Offering was conducted in a manner which did not prejudice the Participants.

Summary

30. In summary, the Applicant represents that the covered transactions satisfied the statutory requirements for an exemption under section 408(a) of the Act because:

(a) The receipt of the Rights by the Plan occurred pursuant to Plan provisions for individually directed investments of such accounts, in connection with the Offering, and was made available by TIB on the same terms to all Shareholders of Common Stock as of the Record Date;

(b) The acquisition of the Rights by the Plan resulted from an independent act of TIB as a corporate entity, and all holders of the Rights, including the Plan, were treated in the same manner with respect to such acquisition;

(c) All Shareholders of Common Stock, including the Plan, received the same proportionate number of Rights based on the number of shares of Common Stock held by such Shareholders;

(d) All decisions regarding the Rights held by the Plan were made by the Participants whose accounts in the Plan received the Rights pursuant to the Offering, in accordance with the provisions under the Plan for individually-directed investment of such account; and

(e) The Plan did not pay any fees or commissions in connection with the acquisition and or holding of the Rights.

Notice to Interested Persons

Notice of the proposed exemption will be given to all Participants who received Rights within 20 days of the publication of the notice of proposed exemption in the **Federal Register**, by first class U.S. mail to the last known address of all such Participants. Such notice will contain a copy of the notice of proposed exemption, as published in the **Federal Register**, and a supplemental statement, as required pursuant to 29 CFR 2570.43(b)(2). The supplemental statement will inform interested persons of their right to comment on and to request a hearing with respect to the pending exemption. Written comments and hearing requests are due within 50 days of the publication of the notice of proposed exemption in the **Federal Register**.

FOR FURTHER INFORMATION CONTACT: Warren Blinder of the Department, telephone (202) 693–8553. (This is not a toll-free number.)

General Information

The attention of interested persons is directed to the following:

(1) The fact that a transaction is the subject of an exemption under section 408(a) of the Act and/or section 4975(c)(2) of the Code does not relieve a fiduciary or other party in interest or disqualified person from certain other provisions of the Act and/or the Code, including any prohibited transaction provisions to which the exemption does not apply and the general fiduciary responsibility provisions of section 404 of the Act, which, among other things, require a fiduciary to discharge his duties respecting the plan solely in the interest of the participants and beneficiaries of the plan and in a prudent fashion in accordance with section 404(a)(1)(b) of the Act; nor does it affect the requirement of section 401(a) of the Code that the plan must operate for the exclusive benefit of the employees of the employer maintaining the plan and their beneficiaries;

(2) Before an exemption may be granted under section 408(a) of the Act and/or section 4975(c)(2) of the Code, the Department must find that the exemption is administratively feasible, in the interests of the plan and of its participants and beneficiaries, and protective of the rights of participants and beneficiaries of the plan;

(3) The proposed exemptions, if granted, will be supplemental to, and not in derogation of, any other provisions of the Act and/or the Code, including statutory or administrative exemptions and transitional rules. Furthermore, the fact that a transaction is subject to an administrative or statutory exemption is not dispositive of whether the transaction is in fact a prohibited transaction; and

(4) The proposed exemptions, if granted, will be subject to the express condition that the material facts and representations contained in each application are true and complete, and that each application accurately describes all material terms of the transaction which is the subject of the exemption.

Signed at Washington, DC, this 27th day of March 2012.

Lyssa E. Hall,

Acting Director of Exemption Determinations, Employee Benefits Security Administration, U.S. Department of Labor.

[FR Doc. 2012–7706 Filed 3–29–12; 8:45 am]

BILLING CODE 4510–29–P

OFFICE OF MANAGEMENT AND BUDGET

Federal Participation in the Development and Use of Voluntary Consensus Standards and in Conformity Assessment Activities

ACTION: Request for Information and Notice of public workshop.

SUMMARY: The Office of Management and Budget (OMB) invites interested parties to provide input on current issues regarding Federal agencies' standards and conformity assessment related activities. Input is being sought to inform OMB's consideration of whether and how to supplement Circular A–119 (Federal Participation in the Development and Use of Voluntary Consensus Standards and in Conformity Assessment Activities). In addition, OMB is announcing a public workshop at the Department of Commerce's National Institute of Standards and Technology (NIST) on May 15, 2012. A complementary NIST workshop, ''Conformity Assessment: Approaches and Best Practices,'' will take place on April 11, 2012 to seek input from individuals on the planned update of *Guidance on Federal Conformity Assessment Activities,* issued by NIST in 2000. The NIST workshop was announced separately by NIST at *http://www.nist.gov/director/sco/ca-workshop-2012.cfm* (see also 77 FR 15719; March 16, 2012).

DATES: *Comments:* Comments are due on or before April 30, 2012.

Public workshop: In addition to providing written comments, interested parties are invited to attend the public workshop on May 15th. The workshop will include presentations from key government officials, industry, and experts on standards and conformity assessment issues, and time will be allotted for participant input and discussions. There is no registration fee for the workshop.

Registration: To gain access to the NIST campus, located at 100 Bureau Drive in Gaithersburg, MD 20899, all participants must register in advance no later than 5 p.m. EST on May 8, 2012. Non-U.S. citizens must register no later than May 1, 2012. There will be no onsite registration. To register online, visit the ''Register Now'' link on the conference web site at *https://www-s.nist.gov/CRS/conf_disclosure.cfm?conf_id=5262*.

ADDRESSES: All comments should be submitted via *http://www.regulations.gov* or faxed at 202–395–5167. Please submit comments only and include your name, company name (if any), and cite ''Federal Participation in the Development and Use of Voluntary Consensus Standards and in Conformity Assessment Activities'' in all correspondence. All comments received will be posted, without change or redaction, to *www.regulations.gov,* so commenters should not include information they do not wish to be posted (e.g., personal or confidential business information).

FOR FURTHER INFORMATION CONTACT: Jasmeet Seehra, Office of Information and Regulatory Affairs, at *jseehra@omb.eop.gov*.

SUPPLEMENTARY INFORMATION: In the ''National Technology Transfer and Advancement Act of 1995'' (Pub L. 104–113; hereinafter ''the NTTAA''), Congress stated that Federal agencies ''shall use technical standards that are developed or adopted by voluntary consensus standards bodies, using such technical standards as a means to carry out policy objectives or activities,'' except when an agency determines that such use ''is inconsistent with applicable law or otherwise impractical.'' As amended by Section 1115 of Public Law 107–107, Section 12(d) provides that:

(d) UTILIZATION OF CONSENSUS TECHNICAL STANDARDS BY FEDERAL AGENCIES; REPORTS.—

(1) IN GENERAL.—Except as provided in paragraph (3) of this subsection, all Federal agencies and departments shall use technical standards that are developed or adopted by voluntary consensus standards bodies, using such technical standards as a means to carry out policy objectives or activities determined by the agencies and departments.

(2) CONSULTATION; PARTICIPATION.—In carrying out paragraph (1) of this subsection, Federal agencies and departments shall consult with voluntary, private sector, consensus standards bodies and shall, when such participation is in the public interest and is compatible with agency and departmental missions, authorities, priorities, and budget resources, participate with such bodies in the development of technical standards.

(3) EXCEPTION.—If compliance with paragraph (1) of this subsection is inconsistent with applicable law or otherwise impractical, a Federal agency or department may elect to use technical standards that are not developed or adopted by voluntary consensus standards bodies if the head of each such agency or department transmits to the Office of Management and Budget an explanation of the reasons for using such standards. Each year, beginning with fiscal year 1997, the Office of Management and Budget shall transmit to Congress and its committees a report summarizing all explanations received in the preceding year under this paragraph.

(4) EXPENSES OF GOVERNMENT PERSONNEL.—Section 5946 of title 5, United States Code, shall not apply with respect to any activity of an employee of a Federal agency or department that is determined by the head of that agency or department as being an activity undertaken in carrying out this subsection.

(5) DEFINITION OF TECHNICAL STANDARDS.—As used in this subsection, the term ''technical standards'' means performance based or design-specific technical specifications and related management systems practices.

Section 12(d) is found as a ''note'' to 15 U.S.C. 272.

In response to the enactment of the NTTAA, OMB prepared a proposed set of revisions to Circular A–119 (entitled ''Federal Participation in the Development and Use of Voluntary Consensus Standards and in Conformity Assessment Activities'') and issued a **Federal Register** notice seeking public comment on the proposed revisions. 61 FR 68312 (December 27, 1996). After consideration of the comments, OMB issued the final revision of the Circular. 63 FR 8546 (February 19, 1998). In the preamble to the final notice, OMB responded to the public comments and provided explanatory background regarding the revised Circular. A copy of the Circular is on OMB's Web site at *http://www.whitehouse.gov/omb/circulars_a119/.*

The policies in the Circular are intended to reduce to a minimum the reliance by agencies on government-unique standards. In accordance with Section 12(d) of the NTTAA, Circular A–119 directs Federal agencies to use voluntary consensus standards in lieu of government-unique standards except where inconsistent with law or otherwise impractical. The Circular also provides guidance for agencies participating in the work of bodies that develop voluntary consensus standards and describes procedures for satisfying the NTTAA's agency-reporting requirements. In addition, consistent with Section 12(b) of the NTTAA, the Circular directs the Secretary of Commerce to issue guidance to agencies in order to coordinate conformity assessment activities.

On January 17, 2012, the Office of Information and Regulatory Affairs, the Office of Science and Technology Policy, and the United States Trade Representative built on the Circular and issued guidance on Federal engagement in standards activities to address national priorities.[1] We note more generally the requirements of Executive Order 13563, which emphasizes that our regulatory system ''must protect public health, welfare, safety, and our environment while *promoting economic growth, innovation, competitiveness, and job creation''* (emphasis added), and which stresses the importance of public participation and of careful consideration of both benefits and costs.

Purpose: The purpose of this Request for Information (RFI) and related public workshop on May 15, 2012, is to allow interested stakeholders to provide input to OMB, NIST, Federal regulators and other relevant agencies on how the Federal government should address issues in standards and conformity assessment that have emerged or moved to the forefront since the Circular was promulgated in 1998. Such input could help improve U.S. agencies' implementation of the NTTAA and the Circular.

In addition, input received through the RFI and during the workshop could be used to inform OMB's consideration of whether and how to supplement Circular A–119 to provide additional or more specific guidance on standards and conformity assessment to agencies engaged in rulemaking, procurement, and other activities. Any such supplemental guidance would be developed in conjunction with NIST's effort to update its conformity assessment guidelines, in order to ensure consistency between the two documents. The NIST conformity assessment guidelines are available at *http://gsi.nist.gov/global/docs/FR_FedGuidanceCA.pdf.* Additional information on the conformity assessment workshop objectives was provided by NIST in a separate **Federal**

[1] See *http://www.whitehouse.gov/sites/default/files/omb/memoranda/2012/m-12-08_1.pdf.*

Register notice published on March 16, 2012 (77 FR 15719).

If OMB determines, based on the responses to the RFI, discussions at the workshops, and further consideration of the issues, that it would be useful to develop supplemental guidance for the Circular to address some or all of the issues raised, then OMB will publish a draft notice in the **Federal Register** at a subsequent date and request public comment.

In response to this RFI and at the workshop, OMB is interested in receiving input from interested stakeholders pertaining to one or more of the following issues relating to standards and conformity assessment, specifically with respect to how these issues may affect agencies engaged in rulemaking, procurement, and other activities.

Agency Implementation of Circular A–119 in Rulemakings. Are Federal agencies generally following the guidance set out in the Circular and providing an adequate explanation of how they considered standards and conformity assessment-related issues in the preambles to rulemakings?

Standardization Activities. OMB A–119 does not establish a preference between consensus and non-consensus standards developed in the private sector. A limited set of foundational attributes of standardization activities are identified in the Circular, focusing on voluntary consensus standard activities. It may also be important to recognize the contributions of standardization activities that take place outside of the voluntary consensus process, in particular certain activities in emerging technology areas.

• What factors should agencies use in evaluating whether to use voluntary non-consensus standards in regulation, procurement solicitations, or other non-regulatory uses? OMB also invites comments on the respective roles of voluntary consensus standards vs. voluntary non-consensus standards for agency responsibilities in rulemaking, procurement, and other activities.

Conformity Assessment. Circular A–119 directs the Secretary of Commerce to issue guidance to Federal agencies on conformity assessment. NIST issued such guidance in 2000 and plans to update the guidance.

In conjunction with NIST's efforts to update its conformity assessment guidance, should a supplement to Circular A–119 be issued to set out relevant principles on conformity assessment? If so, what issues should be addressed in such a supplement? The following are among the topics that could be considered:

• Factors agencies should use in selecting the appropriate conformity assessment procedure, including product/sector specific issues and the level of risk of non-fulfillment of legitimate regulatory, procurement, or other mission-related objectives;

• Guidance for regulatory agencies on compliance with relevant international obligations pertaining to conformity assessment and accreditation activities;

• Factors agencies should consider in determining whether to recognize the results of conformity assessment and accreditation activities conducted by private sector bodies in support of regulation;

• Non-regulatory uses of standards (including vendor conformity for purposes of response to procurement solicitations); and

• Ensuring that agencies consider how to minimize conformity assessment costs and delays for businesses, especially small and medium sized enterprises, subject to statutory and budgetary constraints and the ability of agencies to fulfill their legitimate regulatory, procurement, or other mission-related objectives.

Protection of Copyright Associated With Standards. Standards themselves are considered to be intellectual property and are typically copyrighted by the standards developing bodies that administer the process by which specific standards are developed and maintained. The rights of copyright holders are protected under U.S. law, and standards developers typically charge fees to access their copyrighted materials. Some parties have raised transparency concerns with respect to the availability of copyrighted materials in instances where standards are referenced or incorporated in regulation and compliance with such standards is mandatory.

In this respect, we take note of three recent developments relevant to this issue:

At its Plenary Session on December 8, 2011, the Administrative Conference of the United States (ACUS) considered and adopted a Recommendation on Incorporation by Reference, specifically addressing the place of voluntary consensus standards in that process and how to determine ''reasonable availability.'' *http://www.acus.gov/wp-content/uploads/downloads/2011/12/Recommendation-2011-5-Incorporation-by-Reference.pdf.*

Second, the Pipeline Safety, Regulatory Certainty, and Job Creation Act of 2011 (the Act) was signed into law on January 3, 2012 (Pub. L. 112–90). Section 24 of the Act created a new subsection (p) of Section 60102 of Title 49 of the U.S. Code. Section 60102(p) prohibits the Secretary of Transportation from issuing ''guidance or a regulation'' pursuant to Title 49 of the U.S. Code, Chapter 601 (pipeline safety) ''that incorporates by reference any documents or portions thereof unless those documents or portions thereof are made available to the public, free of charge, on an Internet Web site.'' Section 60102(p) takes effect one year from the date of its enactment, *i.e.,* January 3, 2013.

Third, the National Archives and Records Administration, Office of the Federal Register, recently published a petition for rulemaking received on February 13, 2012, to amend its regulations governing the approval of agency requests to incorporate material by reference into the Code of Federal Regulations, and requested public comment. 77 FR 11414 (February 27, 2012). OMB notes that the petition raises issues that are closely related to some of the issues discussed in this RFI and encourages interested stakeholders to provide comments in response to the petition.

Circular A–119 specifically contemplates incorporation by reference of voluntary consensus standards by Federal agencies, defining agency ''use'' of a voluntary consensus standard as ''incorporation of a standard in whole, in part, or by reference for procurement purposes, and the inclusion of a standard in whole, in part, or by reference in regulation(s).'' Circular A–119 also directs agencies to respect intellectual property rights that may exist in voluntary consensus standards that are incorporated into regulation by reference: ''If a voluntary standard is used and published in an agency document, your agency must observe and protect the rights of the copyright holder and any other similar obligations.''

Since passage of the NTTAA, major strides have been made by Federal agencies in their use of voluntary consensus standards. The NIST ''Standards Incorporated by Reference Database'' includes thousands of such standards incorporated by reference in the CFR—*http://standards.gov/sibr/query/index.cfm?fuseaction=rsibr.total_regulatory_sibr.*

• Is lack of access to standards incorporated by reference in regulation an issue for commenters responding to a request for public comment in rulemaking or for stakeholders that require access to such standards? Please provide specific examples.

• What are the best practices for providing access to standards incorporated by reference in regulation

during rulemaking and during the effective period of the regulation while respecting the copyright associated with the standard?

• What are the best practices for incorporating standards by reference in regulation while respecting the copyright associated with the standard?

Voluntary Consensus Standards and Cost-Benefit Analysis. Standards developing bodies, including not-for-profit organizations, use a variety of cost-recovery models as part of their overall way of doing business. OMB believes that it may be helpful for the purposes of the Circular and for the evaluation of costs and benefits of significant regulatory actions pursuant to Executive Orders 12866 and 13563 for Federal agencies to have a basic understanding of the costs associated with the development of private sector standards, in addition to the purchase costs of standards. Similarly, agencies and the public should have an understanding of the overall resources and costs that would be involved if Federal agencies were to develop government-unique standards. Both of these can be elements in determining when it is practical or impractical to incorporate a voluntary standard into regulation or otherwise adopt a standard in the course of carrying out an agency's mission, as compared to developing a government-unique standard.

• What resource and other costs are involved in the development and revision of voluntary standards?

• What economic and other factors should agencies take into consideration when determining that the use of a voluntary standard is practical for regulatory or other mission purposes?

• How often do standards-developing bodies review and subsequently update standards? If standards are already incorporated by reference in regulations, do such bodies have mechanisms in place for alerting the relevant agencies and the public, especially in regard to the significance of the changes in the standards?

Using and Updating Standards in Regulation. Federal agencies have adopted various methods of using standards as a basis for regulation. They have also developed different approaches to updating standards that have been referenced or incorporated in regulations.

• Should OMB set out best practices on how to reference/incorporate standards (or the relevant parts) in regulation? If so, what are the best means for doing so? Are the best means of reference/incorporation context-specific? Are there instances where incorporating a standard or part thereof into a regulation is preferable to referencing a standard in regulation (or vice versa)?

• Should an OMB supplement to the Circular set out best practices for updating standards referenced in regulation as standards are revised? If so, what updating practices have worked well and which ones have not?

OMB recognizes that changes in technology and the need for innovation can result in the updating of private sector standards in a turn-around time of two years or even less. Where such standards are already incorporated into regulations, these changes can suggest a need to update the relevant regulations as well and, in some cases, can result in a need for regulated entities to purchase the newly updated standards on a fairly routine basis. In addition to the costs associated with the continuing purchase of such standards, rapid update cycles may make it difficult for the regulated public to understand the nature and significance of the changing regulations.

• Is there a role for OMB in providing guidance on how Federal agencies can best manage the need for relevant regulations in the face of changing standards?

• How should agencies determine the cost-effectiveness of issuing updated regulations in response to updated standards?

• Do agencies consult sufficiently with private sector standards bodies when considering the update of regulations that incorporate voluntary standards, especially when such standards may be updated on a regular basis?

Use of More Than One Standard or Conformity Assessment Procedure in a Regulation or Procurement Solicitation. OMB recognizes that, in some instances, it may be best, in terms of economic activity, if a regulation or procurement solicitation sets out a requirement that can be met by more than one standard and more than one conformity assessment procedure. In some cases, however, allowing the use of more than one standard or conformity assessment procedure may not be possible or meet the regulatory or procurement objective. For example, doing so may be precluded by statute, and an alternate standard or conformity assessment procedure may not provide an equivalent level of protection as the standard or conformity assessment procedure selected by the regulator.

• Should OMB provide guidance to agencies on when it is appropriate to allow the use of more than one standard or more than one conformity assessment procedure to demonstrate conformity with regulatory requirements or solicitation provisions?

• Where an agency is requested by stakeholders to consider allowing the demonstration of conformity to another country's standard or the use of an alternate conformity assessment procedure as adequate to fulfilling U.S. requirements, should OMB provide guidance to agencies on how to consider such requests?

Other Developments

• Have there been any developments internationally—including but not limited to U.S. regulatory cooperation initiatives—since the publication of Circular A–119 that OMB should take into account in developing a possible supplement to the Circular?

• Does the significant role played by consortia today in standards development in some technology areas have any bearing on (or specific implications for) Federal participation?

• Are there other issues not set out above that OMB might usefully seek to address in a supplement?

Cass Sunstein,

Administrator, Office of Information and Regulatory Affairs, Office of Management and Budget.

[FR Doc. 2012–7602 Filed 3–29–12; 8:45 am]

BILLING CODE P

MILLENNIUM CHALLENGE CORPORATION

[MCC 12–04]

Report on Countries That Are Candidates for Millennium Challenge Account Eligibility in Fiscal Year 2012 and Countries That Would Be Candidates but for Legal Prohibitions

AGENCY: Millennium Challenge Corporation.

ACTION: Notice.

SUMMARY: Section 608(d) of the Millennium Challenge Act of 2003 (the ''Act'') requires the Millennium Challenge Corporation to publish a report that identifies countries that are ''candidate countries'' for Millennium Challenge Account assistance during FY 2012. In December 2011, Congress enacted changes in MCC's FY 2012 appropriation that redefined candidate countries for FY 2012 as part of the Consolidated Appropriations Act, 2012 (Pub. L. 112–74) (the ''Appropriations Act'').[1] While this does not affect the

[1] The changes to the Act enacted in the Appropriations Act only apply to the FY 2012 selection process. The relevant language would need to be included in next year's appropriations

compact or threshold program eligibility decisions made at the December 2011 MCC Board meeting, it does alter the income classification of some candidate countries. As such, it is necessary for MCC to revise its FY 2012 Candidate Country Report. This revised report incorporates the new definitions and the subsequent reclassification of countries. The report is set forth in full below and updates the report published November 8, 2011 (76 FR 69291).

Dated: March 26, 2012.

Melvin F. Williams, Jr.,

VP/General Counsel and Corporate Secretary, Millennium Challenge Corporation.

Report on Countries That Are Candidates for Millennium Challenge Account Eligibility for Fiscal Year 2012 and Countries That Would Be Candidates but for Legal Prohibitions

Summary

This report to Congress is provided in accordance with section 608(a) of the Millennium Challenge Act of 2003, as amended, 22 U.S.C. 7701, 7707(a) (the ''Act''). The Act authorizes the provision of Millennium Challenge Account (MCA) assistance for countries that enter into a Millennium Challenge Compact with the United States to support policies and programs that advance the progress of such countries to achieve lasting economic growth and poverty reduction. The Act requires the Millennium Challenge Corporation (MCC) to take a number of steps in selecting countries with which MCC will seek to enter into a compact, including (a) determining the countries that will be eligible for MCA assistance for fiscal year 2012 (FY 2012) based on a country's demonstrated commitment to (i) just and democratic governance, (ii) economic freedom, and (iii) investments in its people; and (b) considering the opportunity to reduce poverty and generate economic growth in the country. These steps include the submission of reports to the congressional committees specified in the Act and the publication of notices in the **Federal Register** that identify:

The countries that are ''candidate countries'' for MCA assistance for FY 2012 based on their per capita income levels and their eligibility to receive assistance under U.S. law and countries that would be candidate countries but for specified legal prohibitions on assistance (section 608(a) of the Act);

The criteria and methodology that the MCC Board of Directors (Board) will use to measure and evaluate the relative policy performance of the ''candidate countries'' consistent with the requirements of subsections (a) and (b) of section 607 of the Act in order to determine ''MCA eligible countries'' from among the ''candidate countries'' (section 608(b) of the Act); and

The list of countries determined by the Board to be ''MCA eligible countries'' for FY 2012, identification of such countries with which the Board will seek to enter into compacts, and a justification for such eligibility determination and selection for compact negotiation (section 608(d) of the Act).

This report is the first of three required reports listed above. This report was initially published in September 2011. In December 2011, Congress enacted changes in MCC's FY 2012 appropriation that redefined candidate countries for FY 2012 as part of the Consolidated Appropriations Act, 2012 (Pub. L. 112–74) (the ''Appropriations Act'').[2] While this does not affect the compact or threshold program eligibility decisions made at the December 2011 MCC Board meeting, it does alter the income classification of some candidate countries. As such, it is necessary for MCC to revise its FY 2012 Candidate Country Report. This revised report incorporates the new definitions and the subsequent reclassification of countries.

Candidate Countries for FY 2012

The Act requires the identification of all countries that are candidates for MCA assistance for FY 2012 and the identification of all countries that would be candidate countries but for specified legal prohibitions on assistance. Due to provisions in the Appropriations Act, the FY 2012 candidate pool must be structured differently than in past years. The new provisions define low income as the 75 poorest countries and provide for gradual graduation from the low income to lower middle income category. This year's newly-issued candidate list will establish the baseline of those countries for purposes of determining income levels. The provisions of the Appropriations Act that supplant Sections 606 (a) and (b) of the Act provide that for FY 2012, a country shall be a candidate for MCA assistance if it:

Meets one of the following tests:

Has a per capita income that is not greater than the World Bank's lower middle income country threshold for such fiscal year ($3,975 GNI per capita for FY12); and is among the 75 lowest per capita income countries, as identified by the World Bank; or

Has a per capita income that is not greater than the World Bank's lower middle income country threshold for such fiscal year ($3,975 GNI per capita for FY12); but is not among the 75 lowest per capita income countries as identified by the World Bank;

and

Is not ineligible to receive U.S. economic assistance under part I of the Foreign Assistance Act of 1961, as amended, (the ''Foreign Assistance Act''), by reason of the application of the Foreign Assistance Act or any other provision of law.

Pursuant to section 606(c) of the Act, the Board identified the following countries as candidate countries under the Act for FY 2012 at its March 22, 2012 meeting. In so doing, the Board referred to the prohibitions on assistance as applied to countries in the Department of State, Foreign Operations, and Related Programs Appropriations Act, 2012 (SFOAA), Public Law 112–74, Div. I. All section references identified as prohibitions on assistance to a given country are taken from Title VII of the FY 2012 SFOAA, unless another statue is identified.

[FR Doc. 2012–7607 Filed 3–29–12; 8:45 am]

BILLING CODE 9211–03–P

act or in an amendment to the Act in order for these changes to continue beyond FY 2012.

[2] The changes to the Act enacted in the Appropriations Act only apply to the FY 2012 selection process. The relevant language would need to be included in next year's appropriations act or in an amendment to the Act in order for these changes to continue beyond FY 2012.

NATIONAL SCIENCE FOUNDATION

Agency Information Collection Activities: Comment Request

AGENCY: National Science Foundation.

ACTION: Submission for OMB review; comment request.

SUMMARY: The National Science Foundation (NSF) has submitted the following information collection requirement to OMB for review and clearance under the Paperwork Reduction Act of 1995, Public Law 104–13. This is the second notice for public comment; the first was published in the **Federal Register** at 77 FR 3009, and no comments were received. NSF is forwarding the proposed renewal submission to the Office of Management and Budget (OMB) for clearance simultaneously with the publication of this second notice. Comments regarding (a) whether the collection of information is necessary for the proper performance of the functions of the agency, including whether the information will have practical utility; (b) the accuracy of the agency's estimate of burden including the validity of the methodology and assumptions used; (c) ways to enhance the quality, utility and clarity of the information to be collected; or (d) ways to minimize the burden of the collection of information on those who are to respond, including through the use of

appropriate automated, electronic, mechanical, or other technological collection techniques or other forms of information technology should be addressed to: Office of Information and Regulatory Affairs of OMB, Attention: Desk Officer for National Science Foundation, 725 17th Street NW., Room 10235, Washington, DC 20503, and to Suzanne H. Plimpton, Reports Clearance Officer, National Science Foundation, 4201 Wilson Boulevard, Suite 295, Arlington, Virginia 22230 or send email to *chines@nsf.gov*. Comments regarding these information collections are best assured of having their full effect if received within 30 days of this notification. Copies of the submission(s) may be obtained by calling 703–292–7556.

FOR FURTHER INFORMATION CONTACT: Suzanne H. Plimpton at (703) 292–7556 or send email to *splimpto@nsf.gov*. Individuals who use a telecommunications device for the deaf (TDD) may call the Federal Information Relay Service (FIRS) at 1–800–877–8339 between 8 a.m. and 8 p.m., Eastern time, Monday through Friday.

NSF may not conduct or sponsor a collection of information unless the collection of information displays a currently valid OMB control number and the agency informs potential persons who are to respond to the collection of information that such persons are not required to respond to the collection of information unless it displays a currently valid OMB control number.

Title: Request for Proposals.

OMB Control Number: 3145–0080.

Proposed Project: The Federal Acquisition Regulations (FAR) Subpart 15.2—''Solicitation and Receipt of Proposals and Information'' prescribes policies and procedures for preparing and issuing Requests for Proposals. The FAR System has been developed in accordance with the requirement of the Office of Federal Procurement Policy Act of 1974, as amended. The NSF Act of 1950, as amended, 42 U.S.C. 1870, Sec. II, states that NSF has the authority to:

(c) Enter into contracts or other arrangements, or modifications thereof, for the carrying on, by organizations or individuals in the United States and foreign countries, including other government agencies of the United States and of foreign countries, of such scientific or engineering activities as the Foundation deems necessary to carry out the purposes of this Act, and, at the request of the Secretary of Defense, specific scientific or engineering activities in connection with matters relating to international cooperation or national security, and, when deemed appropriate by the Foundation, such contracts or other arrangements or modifications thereof, may be entered into without legal consideration, without performance or other bonds and without regard to section 5 of title 41, U.S.C.

Use of the Information: Request for Proposals (RFP) is used to competitively solicit proposals in response to NSF need for services. Impact will be on those individuals or organizations who elect to submit proposals in response to the RFP. Information gathered will be evaluated in light of NSF procurement requirements to determine who will be awarded a contract.

Estimate of Burden: The Foundation estimates that, on average, 558 hours per respondent will be required to complete the RFP.

Respondents: Individuals; business or other for-profit; not-for-profit institutions; Federal government; state, local, or tribal governments.

Estimated Number of Responses: 75.

Estimated Total Annual Burden on Respondents: 41,850 hours.

Dated: March 27, 2012.

Suzanne H. Plimpton,

Reports Clearance Officer, National Science Foundation.

[FR Doc. 2012–7651 Filed 3–29–12; 8:45 am]

BILLING CODE 7555–01–P

NATIONAL SCIENCE FOUNDATION

Proposal Review Panel for Materials Research, Notice of Meeting

In accordance with the Federal Advisory Committee Act (Pub. L. 92–463 as amended), the National Science Foundation announces the following meeting:

Name: Site visit review of the Materials Research Science and Engineering Center (MRSEC) at the Pennsylvania State University by the Division of Materials Research (DMR) #1203.

Dates & Times: April 24, 2012; 5:30 p.m.–8:30 p.m.; April 25, 2012; 7:45 a.m.–7:30 p.m.; April 26, 2012; 8 a.m.–4:45 p.m.

Place: Pennsylvania State University, College Station, PA.

Type of Meeting: Part open.

Contact Person: Dr. Sean L. Jones, Program Director, Materials Research Science and Engineering Centers Program, Division of Materials Research, Room 1065, National Science Foundation, 4201 Wilson Boulevard, Arlington, VA 22230, Telephone (703) 292–2986.

Purpose of Meeting: To provide advice and recommendations concerning further support of the MRSEC at Penn State.

Agenda:

Tuesday, April 24, 2012

6 p.m.–7 p.m. Closed—Briefing of panel
7 p.m.–8:30 p.m. Open—Poster Session

Wednesday, April 25, 2012

7:45 a.m.–3:45 p.m. Open—Review of the MRSEC
3:45 p.m.–5:30 p.m. Closed—Executive Session
6 p.m.–7:30 p.m. Open—Dinner

Thursday, April 26, 2012

8 a.m.–9 a.m. Closed—Executive session
9 a.m.–10:45 a.m. Open—Review of the MRSEC
10:45 a.m.–4:45 p.m. Closed—Executive Session, Draft and Review Report

Reason for Closing: The work being reviewed may include information of a proprietary or confidential nature, including technical information; financial data, such as salaries and personal information concerning individuals associated with the MRSEC. These matters are exempt under 5 U.S.C. 552 b(c), (4) and (6) of the Government in the Sunshine Act.

Dated: March 27, 2012.

Susanne Bolton,

Committee Management Officer.

[FR Doc. 2012–7637 Filed 3–29–12; 8:45 am]

BILLING CODE 7555–01–P

NUCLEAR REGULATORY COMMISSION

[Docket No. 50–288; NRC–2011–0172]

Environmental Assessment and Finding of No Significant Impact for License Renewal for the Reed College/Reed College Research Reactor

AGENCY: Nuclear Regulatory Commission.

ACTION: Notice of availability.

FOR FURTHER INFORMATION CONTACT: Geoffrey Wertz, Project Manager, Research and Test Reactor Licensing Branch, Division of Policy and Rulemaking, Office of Nuclear Reactor Regulation, U.S. Nuclear Regulatory Commission, Washington, DC 20555. Telephone: 301–415–0893; email: *Geoffrey.wertz@nrc.gov*.

SUPPLEMENTARY INFORMATION:

I. Introduction

The U.S. Nuclear Regulatory Commission (NRC or the Commission) is considering issuance of a renewed Facility Operating License No. R–112, to be held by Reed College (the licensee), which would authorize continued operation of the Reed Research Reactor (the facility), located in Portland, Multnomah County, Oregon. Therefore, as required by Title 10 of the Code of Federal Regulations (10 CFR) 51.21, the NRC is issuing this Environmental

Assessment and Finding of No Significant Impact. The renewal license will be issued following the publication of this notice.

II. EA Summary

Identification of the Proposed Action

The proposed action would renew Facility Operating License No. R–112 for a period of 20 years from the date of issuance of the renewed license. The proposed action is in accordance with the licensee's application dated August 29, 2007, as supplemented by letters dated January 26, July 30, October 15, 2010, and May 20, August 3, December 12, 2011, and January 27, 2012. In accordance with 10 CFR 2.109, because the renewal application was timely filed, the existing license remains in effect until the NRC takes final action on the renewal application.

Need for the Proposed Action

The proposed action is needed to allow the continued operation of the Reed Research Reactor to routinely provide teaching, research, and services to numerous institutions for a period of 20 years.

Environmental Impacts of the Proposed Action

The NRC has completed its safety evaluation of the proposed action to issue a renewed Facility Operating License No. R–112 to allow continued operation of the Reed Research Reactor for a period of 20 years and concludes there is reasonable assurance that the reactor will continue to operate safely for the additional period of time. The details of the NRC staff's safety evaluation will be provided with the renewed license that will be issued as part of the letter to the licensee approving its license renewal application. This document contains the environmental assessment of the proposed action.

The Reed Research Reactor is located on the eastern side of the main campus of Reed College, which is situated on approximately 100 acres of land in southeastern Portland, Oregon. The Reed Research Reactor serves about 1,300 students. The Reed Research Reactor is housed in a section of the Psychology Building constructed specifically for that purpose. The section of the Psychology building housing the Reed Research Reactor serves as a confinement and is primarily constructed of concrete, brick, and steel. The operations boundary of the Reed Research Reactor encompasses the reactor room and control room. The site boundary encompasses the entire Psychology Building and all areas 76 meters (250 feet) from the center of the reactor pool, including the Psychology and Chemistry Buildings. The nearest permanent residences are about 215 meters (700 feet) from the reactor, located in both the northeast and south directions. Reed College dormitories, housing approximately 30 students from August to May, are located approximately 150 meters (500 feet) south of the reactor.

The Reed Research Reactor is a pool-type, light water moderated and cooled research reactor licensed to operate at a steady-state power level of 250 kilowatts (thermal) (kW(t)). The Reed Research Reactor is a non-pulsing reactor. The reactor core is located at the bottom of an in-ground aluminum tank which is 3 meters (10 feet) wide and 4.6 meters (15 feet) long with a 1.5 meter (5 foot) radius at each end. The tank is 7.6 meters (25 feet) deep and is bolted at the bottom to a 0.6 meter (24 inch) thick poured concrete slab. The aluminum tank is surrounded by approximately 0.76 meters (2.5 feet) of concrete. The aluminum tank is filled with demineralized water to a depth of 7.5 meters (24.5 feet), providing approximately 6 meters (20 feet) of shielding water above the top of the core.

The reactor was originally fueled and operated with both aluminum and stainless steel clad heterogeneous fuel elements consisting of nominally 20% enriched uranium-235 in a zirconium hydride matrix. In February 2011, the aluminum clad fuel in the reactor was replaced with stainless steel clad fuel exclusively provided by the University of Arizona, resulting in a core composed of all stainless steel clad fuel elements. The aluminum clad fuel was subsequently permanently removed from the facility. Many years of experience with operating Training Research and Isotope production General Atomic (TRIGA) reactors has shown that stainless steel clad fuel provides better resistance against potential cladding failure, and is thus less susceptible to leaking radionuclides into the reactor pool and environment. A detailed description of the changes in the reactor as a result of the replacement of the aluminum clad fuel with stainless steel clad fuel is provided in the NRC staff's Safety Evaluation Report accompanying the license renewal. The 250 kW(t) core consists typically of about 87 TRIGA fuel elements positioned between a top and bottom grid plate. The reactor core is in the form of a right circular cylinder of about 23 centimeter (9 inch) radius and 38 centimeter (15 inch) length, positioned with axis vertical on one focus of a 3 meter (10 foot) by 4.6 meter (15 foot) tank with a 1.5 meter (5 foot) radius on each long end. Criticality is controlled and shutdown margin assured by 3 control rods in the form of aluminum or stainless-steel clad boron carbide or borated graphite. The control rods are guided by guide tubes that are inserted through the top grid plate and attached to the bottom grid plate by means of a special locking device. The core is cooled by natural convection of the water that occupies about one-third of the core volume.

The licensee has not requested any other changes to the facility design or operating conditions as part of the application for license renewal. No changes are being made in the types or quantities of effluents that may be released off site. The licensee has systems in place for controlling the release of radiological effluents and implements a radiation protection program to monitor personnel exposures and releases of radioactive effluents. As discussed in the NRC staff's safety evaluation, the systems and radiation protection program are appropriate for the types and quantities of effluents expected to be generated by continued operation of the reactor. Accordingly, there would be no increase in routine occupational or public radiation exposure as a result of license renewal. As discussed in the NRC staff's safety evaluation, the proposed action will not significantly increase the probability or consequences of accidents. Therefore, license renewal would not change the environmental impact of facility operation. The NRC staff evaluated information contained in the licensee's application and data reported to the NRC by the licensee in annual reports for the last several years of operation to determine the projected radiological impact of the facility on the environment during the period of the renewed license. The NRC staff found that releases of radioactive material and personnel exposures were all well within applicable regulatory limits. Based on this evaluation, the NRC staff concluded that continued operation of the reactor would not have a significant environmental impact.

A. Radiological Impact

Environmental Effects of Reactor Operations

Gaseous radioactive effluents are discharged by the facility exhaust system via vents located approximately 3.6 meters (12 feet) above grade, at a volumetric flow rate of approximately 37.6 cubic meters per minute (1330

cubic feet per minute). Other release pathways do exist; however, they are normally secured during reactor operation and have insignificant volumetric flow rates compared to the facility exhaust system. The only significant nuclide found in the gaseous effluent stream is argon-41. The licensee performed measurements of argon-41 production for normal conditions of reactor operation. Licensee calculations and analysis, based on those measurements, indicate that annual argon-41 releases result in an offsite concentration well below the limit of 1.0E–8 microCuries per milliliter (3.7E–10 megaBequerels per milliliter) specified in 10 CFR Part 20, Appendix B for air effluent releases. The NRC staff reviewed the licensee's calculations and analysis and found them to be reasonable. The licensee also performed measurements and calculations to estimate the potential of tritium in the reactor pool water. The licensee determined that tritium is not a concern for the Reed Research Reactor. The NRC staff reviewed the licensee's analysis and found it to be reasonable. Total gaseous radioactive releases reported to the NRC in the licensee's annual reports were less than one percent of the air effluent concentration limits set by 10 CFR part 20, Appendix B. The potential radiation dose to a member of the general public resulting from this concentration is approximately 0.3 millirem (0.003 milliSieverts (mSv)) and this demonstrates compliance with the dose limit of 100 millirem (1 mSv) set by 10 CFR 20.1301. Additionally, this potential radiation dose demonstrates compliance with the air emissions dose constraint of 10 millirem (0.1 mSv) specified in 10 CFR 20.1101(d).

The licensee maintains a policy to not release any liquid radioactive waste as an effluent. Small liquid samples and any small amount of liquid generated from activities such as minor decontamination are disposed by combining with absorbents and treating as solid waste. During the past 5 years, the licensee reported no releases of liquid radioactive waste from the Reed Research Reactor.

The licensee oversees the handling of solid low-level radioactive waste generated at the Reed Research Reactor. The bulk of the waste consists of small items such as gloves, paper, plastic and small pieces of metal. The licensee disposes of the waste by decay-in-storage or shipment to a low level waste broker in accordance with all applicable regulations for transportation of radioactive materials. To comply with the Nuclear Waste Policy Act of 1982, the licensee has entered into a contract with the U.S. Department of Energy (DOE) that provides that DOE retains title to the fuel utilized at the Reed Research Reactor and that DOE is obligated to take the fuel from the site for final disposition.

As described in Chapter 11 of the Reed Research Reactor SAR, personnel exposures are well within the limits set by 10 CFR 20.1201 and are as low as is reasonably achievable (ALARA). The licensee tracks exposures of personnel monitored with dosimeters, which are usually much less than 10 percent of the occupational limit of 5,000 millirem (50 mSv) per year. Area thermo-luminescent dosimeter (TLD) monitors mounted in the control room and other strategic locations provide an additional quarterly measurement of total radiation exposures at those locations. These TLDs typically report less than 200 millirem (2.0 mSv) total over a 1-year period. No changes in reactor operation that would lead to an increase in occupational dose are expected as a result of the proposed action.

The licensee conducts an environmental monitoring program to record and track the radiological impact of the Reed Research Reactor operation on the surrounding unrestricted area. The program consists of continuous area monitors in the facility and periodic surveys in and around the facility. The licensee administers the program and maintains the appropriate records. Over the past five years, the survey program indicated that radiation exposures at the monitoring locations were not significantly higher than those measured at the control locations. Year-to-year trends in exposures are consistent between monitoring locations. Also, no correlation exists between total annual reactor operation and annual exposures measured at the monitoring locations. Based on its review of the past several of data as provided in the licensee's annual reports, the NRC staff concludes that operation of the Reed Research Reactor does not have any significant radiological impact on the surrounding environment. No changes in reactor operation that would affect off-site radiation levels are expected as a result of the proposed action.

Environmental Effects of Accidents

Accident scenarios are discussed in Chapter 13 of the Reed Research Reactor SAR as supplemented in responses to Requests for Additional Information. The maximum hypothetical accident is the cladding rupture of one highly irradiated fuel element with no radioactive decay followed by the instantaneous release of the noble gas and halogen fission products into the air of the reactor room. The licensee conservatively calculated doses to facility personnel and the maximum potential dose to a member of the public. The NRC staff checked the licensee's calculations to verify that the doses represent conservative estimates for the maximum hypothetical accident. Occupational doses resulting from this accident would be well below the 10 CFR Part 20 annual limit of 5,000 mrem (50 mSv). Maximum doses for members of the public resulting from this accident would be well below the 10 CFR Part 20 annual limit of 100 mrem (1.0 mSv). The proposed action will not increase the probability or consequences of accidents.

B. Non-Radiological Impacts

The Reed Research Reactor core is cooled by a light water primary system consisting of the reactor pool, a heat removal system, and a filter and demineralizer water processing system. Cooling occurs by natural convection, with the heated coolant rising out of the core and into the bulk pool water. The large heat sink provided by the volume of primary coolant, approximately 95,000 liters (25,000 gallons) of water, allows several hours of full-power operation without any secondary cooling. The heat removal system transfers heat to the secondary system via a centrifugal pump, heat exchanger and a cooling tower. Both the primary and secondary system use make-up water filtered from the municipal water system. Precautions are taken with the secondary system to prevent biological growth and freezing. During operation, the secondary system is maintained at a higher pressure than the primary system to minimize the likelihood of primary system contamination entering the secondary system, and ultimately the environment. The licensee monitors both systems for purity and to detect leakage.

Given that the proposed action does not involve any change in the operation of the reactor and the heat load dissipated to the environment, the NRC staff concludes that the proposed action will not have a significant impact on the local water supply.

National Environmental Policy Act (NEPA) Considerations

The NRC has responsibilities that are derived from NEPA and from other environmental laws, which include the Endangered Species Act (ESA), Coastal Zone Management Act (CZMA), National Historic Preservation Act (NHPA), Fish and Wildlife Coordination Act (FWCA), and Executive Order 12898

Environmental Justice. The following presents a brief discussion of impacts associated with these laws and other requirements.

1. Endangered Species Act

Federally- or State-listed protected species have not been found in the immediate vicinity of the Reed Research Reactor, and effluents and emissions from the reactor have not had an impact on critical habitat.

2. Coastal Zone Management Act

The Reed Research Reactor is not located within any managed coastal zones, nor would the effluents and emissions from the reactor impact any managed coastal zones.

3. National Historic Preservation Act

The National Historic Preservation Act (NHPA) requires Federal agencies to consider the effects of their undertakings on historic properties. The National Register of Historic Places (NRHP) lists several historical sites in Multnomah County. However, none of the sites are within the general vicinity of the Reed Research Reactor site and, given its location, continued operations of the reactor will not impact any historical sites. The NRC contacted the State Historical Preservation Officer (SHPO) in Oregon and discussed the proposed action. The SHPO concurred that there are no historic properties affected by this action. Based on this information, the NRC finds that the potential impacts of the proposed action would have no adverse effect on historic and archaeological resources in the vicinity of the reactor.

4. Fish and Wildlife Coordination Act

The licensee is not planning any water resource development projects, including any modifications involving impounding a body of water, damming, diverting a stream or river, deepening a channel, irrigation, or altering a body of water for navigation or drainage.

5. Executive Order 12898—Environmental Justice

The environmental justice impact analysis evaluates the potential for disproportionately high and adverse human health and environmental effects on minority and low-income populations that could result from the relicensing and the continued operation of the Reed Research Reactor. Such effects may include human health, biological, cultural, economic, or social impacts. Minority and low-income populations are subsets of the general public residing around the reactor and all are exposed to the same health and environmental effects generated from activities at the rector.

Minority Populations in the Vicinity of the Reed Research Reactor—According to 2010 census data, 25.5 percent of the total population (approximately 276,157 individuals) residing within a 10-mile radius of the reactor facility identified themselves as minority individuals. The largest minority groups were Hispanic or Latino (of any race) (112,079 persons or 10.3 percent), followed by Asian (70,117 or 6.5 percent). According to U.S. Census Bureau 2010 estimates, about 27.9 percent of the Multnomah County population identified themselves as minorities, with persons of Hispanic or Latino origin comprising the largest minority group (10.9 percent), followed by Asian (6.8 percent) and Black or African American (5.8 percent).

Low-income Populations in the Vicinity of the Reed Research Reactor—According to 2010 Census data, an average of 8.8 percent of families and 12.5 percent of individuals residing within counties in a 10 mile radius of the reactor (Clackamas, Multnomah, and Washington Counties, Oregon, and Clark County, Washington), were identified as living below the Federal poverty threshold in 2010. The 2010 Federal poverty threshold was $22,314 for a family of four.

According to American Community Survey Census data estimates for 2010, the median household income for Oregon was $46,560, while 11 percent of families and 15.8 percent of the state population were determined to be living below the Federal poverty threshold. Multnomah County had a higher median household income average ($48,043) and a higher percent of families (13.6 percent) and individuals (18.2 percent) living below the poverty level, respectively.

Impact Analysis—Potential impacts to minority and low-income populations would mostly consist of radiological effects, however radiation doses from continued operations associated with the license renewal are expected to continue at current levels, and would be well below regulatory limits.

Based on this information and the analysis of human health and environmental impacts presented in this environmental assessment, the proposed relicensing would not have disproportionately high and adverse human health and environmental effects on minority and low-income populations residing in the vicinity of the Reed Research Reactor.

Environmental Impacts of the Alternatives to the Proposed Action

As an alternative to license renewal, the NRC considered denying the proposed action. If the NRC denied the request for license renewal, reactor operations at the facility would cease and decommissioning would be required. The NRC notes that, even with a renewed license, the Reed Research Reactor will eventually be decommissioned, at which time the environmental effects of decommissioning would occur. Decommissioning would be conducted in accordance with an NRC-approved decommissioning plan which would require a separate environmental review under 10 CFR 51.21. Cessation of reactor operations at the Reed Research Reactor would reduce or eliminate radioactive effluents and emissions. However, as previously discussed in this environmental assessment, radioactive effluents and emissions from reactor operations constitute a small fraction of the applicable regulatory limits. Therefore, the environmental impacts of renewing the license and the denial of the request for license renewal would be similar. In addition, denying the request for license renewal would eliminate the benefits of teaching, research, and services provided by the Reed Research Reactor.

Alternative Use of Resources

The proposed action does not involve the use of any different resources or significant quantities of resources beyond those previously considered in the issuance of Amendment No. 8 to Facility Operating License No. R–112 for the Reed Research Reactor dated January 4, 2011, which increased the possession limit of special nuclear material and by-product material allowed to be received, possessed and used in the Reed Research Reactor.

Agencies and Persons Consulted

In accordance with the agency's stated policy, on January 25, 2011, the NRC staff consulted with the Oregon State Liaison Officer regarding the environmental impact of the proposed actions. The consultation involved a thorough explanation of the environmental review, the details of this environmental assessment, and the NRC staff's findings. The State official indicated that the State had no issues or concerns with this action, that he understood the NRC review and had no comments regarding the proposed action.

Finding of No Significant Impact

On the basis of the environmental assessment, the NRC concludes that the proposed action will not have a significant effect on the quality of the human environment. Accordingly, the NRC has determined not to prepare an environmental impact statement for the proposed actions.

III. Further Information

Documents related to this action, including the application for license renewal and supporting documentation, are available online in the NRC Library at *http://www.nrc.gov/reading-rm/adams.html.* From this page, the public can gain entry into (ADAMS), which provides text and image files of the NRC's public documents. The application for license renewal, dated August 29, 2007 as supplemented by letters dated January 26, July 30, October 15, 2010, and May 20, August 3, December 12, 2011, and January 27, 2012, is available electronically under ADAMS Accession Nos. ML092310567, ML100610121, ML102360016, ML102990489, ML111520559, ML11222A026, ML113630145, and ML12039A147. Also see the license's annual reports for years 2003–2004 (ADAMS Accession No. ML043620310), 2004–2005 (ADAMS Accession No. ML052930194), 2005–2006 (ADAMS Accession No. ML062850518), 2006–2007 (ADAMS Accession No. ML073040191), 2007–2008 (ADAMS Accession No. ML082890533), 2008–2009 (ADAMS Accession No. ML092720865), 2009–2010 (ADAMS Accession No. ML102440042), and 2010–2011 (ADAMS Accession No. ML11221A161). If you do not have access to ADAMS or if there are problems in accessing the documents located in ADAMS, contact the NRC's PDR reference staff at 1–800–397–4209, 301–415–4737, or by email to *pdr.resource@nrc.gov.* These documents may also be viewed electronically on the public computers located at the NRC's PDR, O 1 F21, One White Flint North, 11555 Rockville Pike (first floor), Rockville, MD 20852. The PDR reproduction contractor will copy documents for a fee.

Dated at Rockville, Maryland, this 21st day of March, 2012.

For the Nuclear Regulatory Commission

Jessie F. Quichocho,

Chief, Research and Test Reactors Licensing Branch, Division of Policy and Rulemaking, Office of Nuclear Reactor Regulation.

[FR Doc. 2012–7675 Filed 3–29–12; 8:45 am]

BILLING CODE 7590–01–P

OFFICE OF PERSONNEL MANAGEMENT

Excepted Service; Consolidated Listing of Schedules A, B, and C Exceptions

AGENCY: Office of Personnel Management.

ACTION: Notice.

SUMMARY: This provides the consolidated notice of all agency specific excepted authorities, approved by the Office of Personnel Management (OPM), under Schedule A, B, or C, as of June 30, 2011, as required by Civil Service Rule VI, Exceptions from the Competitive Service.

FOR FURTHER INFORMATION CONTACT: Senior Executive Resource Services, Employee Services, 202–606–2246.

SUPPLEMENTARY INFORMATION: Civil Service Rule VI (5 CFR 6.1) requires the U.S. Office of Personnel Management (OPM) to publish notice of exceptions granted under Schedule A, B, or C. 5 CFR 213.103(a) requires all Schedule A, B, or C appointing authority available for use by all agencies to be published as regulations in the **Federal Register** and the Code of Federal Regulations. Excepted appointing authorities established solely for use by one specific agency do not meet the standard of general applicability prescribed by the **Federal Register** Act for regulations published in either the **Federal Register** or the Code of Federal Regulations (CFR). Therefore, 5 CFR 213.103(b) requires monthly publication, in the Notices section of the **Federal Register**, any Schedule A, B, or C appointing authority applicable to a single agency. 5 CFR 213.103(c) requires a consolidated listing of all Schedule A, B, and C authorities, current as of June 30 of each year, be published annually in the Notices section of the **Federal Register** at *www.gpoaccess.gov/fr.* That notice follows. Government-wide authorities codified in the CFR are not printed in this notice.

When making appointments under an agency-specific authority, agencies should first list the appropriate Schedule A, B, or C, followed by the applicable number, for example: Schedule A, 213.310x(x)(x). Agencies are reminded that all excepted authorities are subject to the provisions of 5 CFR, part 302 unless specifically exempted OPM at the time of approval.

OPM maintains continuing information on the status of all Schedule A, B, and C appointing authorities. Interested parties needing information about specific authorities during the year may obtain information by writing to the Senior Executive Resource Services, Office of Personnel Management, 1900 E Street NW., Room 6484, Washington, DC 20415, or by calling (202) 606–2246.

The following exceptions are current as of June 30, 2011.

Schedule A

03. Executive Office of the President (Sch. A, 213.3103)

(a) Office of Administration—

(1) Not to exceed 75 positions to provide administrative services and support to the White House Office.

(b) Office of Management and Budget—

(1) Not to exceed 20 positions at grades GS–5/15.

(c) Council on Environmental Quality—

(1) Professional and technical positions in grades GS–9 through 15 on the staff of the Council.

(d)–(f) (Reserved)

(g) National Security Council—

(1) All positions on the staff of the Council.

(h) Office of Science and Technology Policy—

(1) Thirty positions of Senior Policy Analyst, GS–15; Policy Analyst, GS–11/14; and Policy Research Assistant, GS–9, for employment of anyone not to exceed 5 years on projects of a high priority nature.

(i) Office of National Drug Control Policy—

(1) Not to exceed 18 positions, GS–15 and below, of senior policy analysts and other personnel with expertise in drug-related issues and/or technical knowledge to aid in anti-drug abuse efforts.

04. Department of State (Sch. A, 213.3104)

(a) Office of the Secretary—

(1) All positions, GS–15 and below, on the staff of the Family Liaison Office, Director General of the Foreign Service and the Director of Personnel, Office of the Under Secretary for Management.

(2) (Reserved)

(b)–(f) (Reserved)

(g) Bureau of Population, Refugees, and Migration—

(1) Not to exceed 10 positions at grades GS–5 through 11 on the staff of the Bureau.

(h) Bureau of Administration—

(1) (Reserved)

(2) One position of the Director, Art in Embassies Program, GM–1001–15.

(3) (Reserved)

05. Department of the Treasury (Sch. A, 213.3105)

(a) Office of the Secretary—

(1) Not to exceed 20 positions at the equivalent of GS–13 through GS–17 to supplement permanent staff in the study of complex problems relating to international financial, economic, trade, and energy policies and programs of the Government, when filled by individuals with special qualifications for the particular study being undertaken.

(2) Covering no more than 100 positions supplementing permanent staff studying domestic economic and financial policy, with employment not to exceed 4 years.

(3) Not to exceed 100 positions in the Office of the Under Secretary for Terrorism and Financial Intelligence.

(4) Up to 35 temporary or time-limited positions at the GS–9 through 15 grade levels to support the organization, design and stand-up activities for the Consumer Financial Protection Bureau, as mandated by P.L. 111–203. This authority may be used for the following series: GS–201, GS–501, GS–560, GS–1035, GS–1102, GS–1150, GS–1720, GS–1801, and GS–2210. No new appointments may be made under this authority after July 21, 2011, the designated transfer date of the CFPB.

(b)–(d) (Reserved)

(e) Internal Revenue Service—

(1) Twenty positions of investigator for special assignments.

(f) (Reserved)

(g) (Reserved, moved to DOJ)

(h) Office of Financial Responsibility—

(1) Positions needed to perform investment, risk, financial, compliance, and asset management requiring unique qualifications currently not established by OPM. Positions will be in the Office of Financial Stability and the General Schedule (GS) grade levels 12–15 or Senior Level (SL), for initial employment not to exceed 4 years. No new appointments may be made under this authority after December 31, 2012.

06. Department of Defense (Sch. A, 213.3106)

(a) Office of the Secretary—

(1)–(5) Reserved

(6) One Executive Secretary, US-USSR Standing Consultative Commission and Staff Analyst (SALT), Office of the Assistant Secretary of Defense (International Security Affairs).

(b) Entire Department (including the Office of the Secretary of Defense and the Departments of the Army, Navy, and Air Force)—

(1) Dependent School Systems overseas—Professional positions in Military Dependent School systems overseas.

(2) Positions in Attaché 1 systems overseas, including all professional and scientific positions in the Naval Research Branch Office in London.

(3) Positions of clerk-translator, translator, and interpreter overseas;

(4) Positions of Educational Specialist the incumbents of which will serve as Director of Religious Education on the staffs of the chaplains in the military services.

(5) Positions under the program for utilization of alien scientists, approved under pertinent directives administered by the Director of Defense Research and Engineering of the Department of Defense, when occupied by alien scientists initially employed under the program including those who have acquired United States citizenship during such employment.

(6) Positions in overseas installations of the DOD when filled by dependents of military or civilian employees of the U.S. Government residing in the area. Employment under this authority may not extend longer than 2 months following the transfer from the area or separation of a dependent's sponsor: Provided that:

(i) A school employee may be permitted to complete the school year; and

(ii) An employee other than a school employee may be permitted to serve up to 1 additional year when the military department concerned finds that the additional employment is in the interest of management.

(7) Twenty secretarial and staff support positions at GS–12 or below on the White House Support Group.

(8) Positions in DOD research and development activities occupied by participants in the DOD Science and Engineering Apprenticeship Program for High School Students. Persons employed under this authority shall be bona fide high school students, at least 14 years old, pursuing courses related to the position occupied and limited to 1,040 working hours a year. Children of DOD employees may be appointed to these positions, notwithstanding the sons and daughters restriction, if the positions are in field activities at remote locations. Appointments under this authority may be made only to positions for which qualification standards established under 5 CFR part 302 are consistent with the education and experience standards established for comparable positions in the competitive service. Appointments under this authority may not be used to extend the service limits contained in any other appointing authority.

(9) (Reserved)

(10) Temporary or time-limited positions in direct support of U.S. Government efforts to rebuild and create an independent, free and secure Iraq and Afghanistan, when no other appropriate appointing authority applies. Positions will generally be located in Iraq or Afghanistan, but may be in other locations, including the United States, when directly supporting operations in Iraq or in Afghanistan. No new appointments may be made under this authority after October 1, 2012.

(11) Not to exceed 3000 positions that require unique cyber security skills and knowledge to perform cyber risk and strategic analysis, incident handling and malware/vulnerability analysis, program management, distributed control systems security, cyber incident response, cyber exercise facilitation and management, cyber vulnerability detection and assessment, network and systems engineering, enterprise architecture, intelligence analysis, investigation, investigative analysis and cyber-related infrastructure inter-dependency analysis. This authority may be used to make permanent, time-limited and temporary appointments in the following occupational series: Security (GS–0080), Intelligence Analysts (GS–0132), Computer Engineers (GS–0854), Electronic Engineers (GS–0855), Computer Scientists (GS–1550), Operations Research (GS–1515), Criminal Investigators (GS–1811), Telecommunications (GS–0391), and IT Specialists (GS–2210). Within the scope of this authority, the U.S. Cyber Command is also authorized to hire miscellaneous administrative and program (GS–0301) series when those positions require unique qualifications not currently established by OPM. All positions will be at the General Schedule (GS) grade levels 09–15. No new appointments may be made under this authority after December 31, 2012.

(c) (Reserved)

(d) General—

(1) Positions concerned with advising, administering, supervising, or performing work in the collection, processing, analysis, production, evaluation, interpretation, dissemination, and estimation of intelligence information, including scientific and technical positions in the intelligence function; and positions involved in the planning, programming, and management of intelligence resources when, in the opinion of OPM, it is impracticable to examine. This authority does not apply to positions assigned to cryptologic and communications intelligence activities/functions.

(2) Positions involved in intelligence-related work of the cryptologic intelligence activities of the military

departments. This includes all positions of intelligence research specialist, and similar positions in the intelligence classification series; all scientific and technical positions involving the applications of engineering, physical or technical sciences to intelligence work; and professional as well as intelligence technician positions in which a majority of the incumbent's time is spent in advising, administering, supervising, or performing work in the collection, processing, analysis, production, evaluation, interpretation, dissemination, and estimation of intelligence information or in the planning, programming, and management of intelligence resources.

(e) Uniformed Services University of the Health Sciences—

(1) Positions of President, Vice Presidents, Assistant Vice Presidents, Deans, Deputy Deans, Associate Deans, Assistant Deans, Assistants to the President, Assistants to the Vice Presidents, Assistants to the Deans, Professors, Associate Professors, Assistant Professors, Instructors, Visiting Scientists, Research Associates, Senior Research Associates, and Postdoctoral Fellows.

(2) Positions established to perform work on projects funded from grants.

(f) National Defense University—

(1) Not to exceed 16 positions of senior policy analyst, GS–15, at the Strategic Concepts Development Center. Initial appointments to these positions may not exceed 6 years, but may be extended thereafter in 1-, 2-, or 3-year increments, indefinitely.

(g) Defense Communications Agency—

(1) Not to exceed 10 positions at grades GS–10/15 to staff and support the Crisis Management Center at the White House.

(h) Defense Acquisition University—

(1) The Provost and professors.

(i) George C. Marshall European Center for Security Studies, Garmisch, Germany—

(1) The Director, Deputy Director, and positions of professor, instructor, and lecturer at the George C. Marshall European Center for Security Studies, Garmisch, Germany, for initial employment not to exceed 3 years, which may be renewed in increments from 1 to 2 years thereafter.

(j) Asia-Pacific Center for Security Studies, Honolulu, Hawaii—

(1) The Director, Deputy Director, Dean of Academics, Director of College, deputy department chairs, and senior positions of professor, associate professor, and research fellow within the Asia Pacific Center. Appointments may be made not to exceed 3 years and may be extended for periods not to exceed 3 years.

(k) Business Transformation Agency—

(1) Fifty temporary or time-limited (not to exceed four years) positions, at grades GS–11 through GS–15. The authority will be used to appoint persons in the following series: Management and Program Analysis, GS–343: Logistics Management, GS–346; Financial Management Programs, GS–501; Accounting, GS–510; Computer Engineering, GS–854; Business and Industry, GS–1101; Operations Research, GS–1515; Computer Science, GS–1550; General Supply, GS–2001; Supply Program Management, GS–2003; Inventory Management, GS–2010; and Information Technology, GS–2210.

(l) Special Inspector General for Afghanistan—

(1) Positions needed to establish the Special Inspector General for Afghanistan Reconstruction. These positions provide for the independent and objective conduct and supervision of audits and investigations relating to the programs and operations funded with amounts appropriated and otherwise made available for the reconstruction of Afghanistan. These positions are established at General Schedule (GS) grade levels for initial employment not to exceed 3 years and may, with prior approval of OPM, be extended for an additional period of 2 years. No new appointments may be made under this authority after January 31, 2011.

07. Department of the Army (Sch. A, 213.3107)

(a)–(c) (Reserved)

(d) U.S. Military Academy, West Point, New York—

(1) Civilian professors, instructors, teachers (except teachers at the Children's School), Cadet Social Activities Coordinator, Chapel Organist and Choir-Master, Director of Intercollegiate Athletics, Associate Director of Intercollegiate Athletics, Coaches, Facility Manager, Building Manager, three Physical Therapists (Athletic Trainers), Associate Director of Admissions for Plans and Programs, Deputy Director of Alumni Affairs; and Librarian when filled by an officer of the Regular Army retired from active service, and the Military Secretary to the Superintendent when filled by a U.S. Military Academy graduate retired as a regular commissioned officer for disability.

(e)–(f) (Reserved)

(g) Defense Language Institute—

(1) All positions (professors, instructors, lecturers) which require proficiency in a foreign language or knowledge of foreign language teaching methods.

(h) Army War College, Carlisle Barracks, PA—

(1) Positions of professor, instructor, or lecturer associated with courses of instruction of at least 10 months duration for employment not to exceed 5 years, which may be renewed in 1, 2, 3, 4 or 5-year increments indefinitely thereafter.

(i) (Reserved)

(j) U.S. Military Academy Preparatory School, Fort Monmouth, New Jersey—

(1) Positions of Academic Director, Department Head, and Instructor.

(k) U.S. Army Command and General Staff College, Fort Leavenworth, Kansas—

(1) Positions of professor, associate professor, assistant professor, and instructor associated with courses of instruction of at least 10 months duration, for employment not to exceed up to 5 years, which may be renewed in 1, 2, 3, 4 or 5-year increments indefinitely thereafter.

08. Department of the Navy (Sch. A, 213.3108)

(a) General—

(1)–(14) (Reserved)

(15) Marine positions assigned to a coastal or seagoing vessel operated by a naval activity for research or training purposes.

(16) All positions necessary for the administration and maintenance of the official residence of the Vice President.

(b) Naval Academy, Naval Postgraduate School, and Naval War College—

(1) Professors, Instructors, and Teachers; the Director of Academic Planning, Naval Postgraduate School; and the Librarian, Organist-Choirmaster, Registrar, the Dean of Admissions, and Social Counselors at the Naval Academy.

(c) Chief of Naval Operations—

(1) One position at grade GS–12 or above that will provide technical, managerial, or administrative support on highly classified functions to the Deputy Chief of Naval Operations (Plans, Policy, and Operations).

(d) Military Sealift Command

(1) All positions on vessels operated by the Military Sealift Command.

(e)–(f) (Reserved)

(g) Office of Naval Research—

(1) Scientific and technical positions, GS–13/15, in the Office of Naval Research International Field Office which covers satellite offices within the Far East, Africa, Europe, Latin America, and the South Pacific. Positions are to be filled by personnel having

specialized experience in scientific and/or technical disciplines of current interest to the Department of the Navy.

09. Department of the Air Force (Sch. A, 213.3109)

(a) Office of the Secretary—

(1) One Special Assistant in the Office of the Secretary of the Air Force. This position has advisory rather than operating duties except as operating or administrative responsibilities may be exercised in connection with the pilot studies.

(b) General—

(1) Professional, technical, managerial and administrative positions supporting space activities, when approved by the Secretary of the Air Force.

(2) One hundred eighty positions, serviced by Hill Air Force Base, Utah, engaged in interdepartmental activities in support of national defense projects involving scientific and technical evaluations.

(c) Norton and McClellan Air Force Bases, California—

(1) Not to exceed 20 professional positions, GS–11 through GS–15, in Detachments 6 and 51, SM–ALC, Norton and McClellan Air Force Bases, California, which will provide logistic support management to specialized research and development projects.

(d) U.S. Air Force Academy, Colorado—

(1) (Reserved)

(2) Positions of Professor, Associate Professor, Assistant Professor, and Instructor, in the Dean of Faculty, Commandant of Cadets, Director of Athletics, and Preparatory School of the United States Air Force Academy.

(e) (Reserved)

(f) Air Force Office of Special Investigations—

(1) Positions of Criminal Investigators/Intelligence Research Specialists, GS–5 through GS–15, in the Air Force Office of Special Investigations.

(g) Wright-Patterson Air Force Base, Ohio—

(1) Not to exceed eight positions, GS–12 through 15, in Headquarters Air Force Logistics Command, DCS Material Management, Office of Special Activities, Wright-Patterson Air Force Base, Ohio, which will provide logistic support management staff guidance to classified research and development projects.

(h) Air University, Maxwell Air Force Base, Alabama—

(1) Positions of Professor, Instructor, or Lecturer.

(i) Air Force Institute of Technology, Wright-Patterson Air Force Base, Ohio—

(1) Civilian deans and professors.

(j) Air Force Logistics Command—

(1) One Supervisory Logistics Management Specialist, GM–346–14, in Detachment 2, 2762 Logistics Management Squadron (Special), Greenville, Texas.

(k) Wright-Patterson AFB, Ohio—

(1) One position of Supervisory Logistics Management Specialist, GS–346–15, in the 2762nd Logistics Squadron (Special), at Wright-Patterson Air Force Base, Ohio.

(l) Air National Guard Readiness Center—

(1) One position of Commander, Air National Guard Readiness Center, Andrews Air Force Base, Maryland.

10. Department of Justice (Sch. A, 213.3110)

(a) General—

(1) Deputy U.S. Marshals employed on an hourly basis for intermittent service.

(2) Positions at GS–15 and below on the staff of an office of a special counsel.

(3)–(5) (Reserved)

(6) Positions of Program Manager and Assistant Program Manager supporting the International Criminal Investigative Training Assistance Program in foreign countries. Initial appointments under this authority may not exceed 2 years, but may be extended in 1-year increments for the duration of the in-country program.

(b) (Reserved, moved to DHS)

(c) Drug Enforcement Administration—

(1) (Reserved)

(2) Four hundred positions of Intelligence Research Agent and/or Intelligence Operation Specialist in the GS–132 series, grades GS–9 through GS–15.

(3) Not to exceed 200 positions of Criminal Investigator (Special Agent). New appointments may be made under this authority only at grades GS–7/11.

(d) National Drug Intelligence Center— All positions.

(e) Bureau of Alcohol, Tobacco, and Firearms—

(1) One hundred positions of criminal investigator for special assignments.

(2) One non-permanent Senior Level (SL) Criminal Investigator to serve as a senior advisor to the Assistant Director (Firearms, Explosives, and Arson).

11. Department of Homeland Security (Sch. A, 213.3111)

(a) (Revoked 11/19/2009)

(b) Law Enforcement Policy—

(1) Ten positions for oversight policy and direction of sensitive law enforcement activities.

(c) Homeland Security Labor Relations Board/Homeland Security Mandatory Removal Board—

(1) Up to 15 Senior Level and General Schedule (or equivalent) positions

(d) General—

(1) Not to exceed 1,000 positions to perform cyber risk and strategic analysis, incident handling and malware/vulnerability analysis, program management, distributed control systems security, cyber incident response, cyber exercise facilitation and management, cyber vulnerability detection and assessment, network and systems engineering, enterprise architecture, intelligence analysis, investigation, investigative analysis and cyber-related infrastructure interdependency analysis requiring unique qualifications currently not established by OPM. Positions will be at the General Schedule (GS) grade levels 09–15. No new appointments may be made under this authority after December 31, 2012.

(3) Papago Indian Agency—Not to exceed 25 positions of Customs Patrol Officers in the Papago Indian Agency in the State of Arizona when filled by the appointment of persons of one-fourth or more Indian blood. (Formerly 213.3105(b)(9))

12. Department of the Interior (Sch. A, 213.3112)

(a) General—

(1) Technical, maintenance, and clerical positions at or below grades GS–7, WG–10, or equivalent, in the field service of the Department of the Interior, when filled by the appointment of persons who are certified as maintaining a permanent and exclusive residence within, or contiguous to, a field activity or district, and as being dependent for livelihood primarily upon employment available within the field activity of the Department.

(2) All positions on Government-owned ships or vessels operated by the Department of the Interior.

(3) Temporary or seasonal caretakers at temporarily closed camps or improved areas to maintain grounds, buildings, or other structures and prevent damages or theft of Government property. Such appointments shall not extend beyond 130 working days a year without the prior approval of OPM.

(4) Temporary, intermittent, or seasonal field assistants at GS–7, or its equivalent, and below in such areas as forestry, range management, soils, engineering, fishery and wildlife management, and with surveying parties. Employment under this authority may not exceed 180 working days a year.

(5) Temporary positions established in the field service of the Department for emergency forest and range fire

prevention or suppression and blister rust control not to exceed 180 working days a year: Provided, that an employee may work as many as 220 working days a year when employment beyond 180 days is required to cope with extended fire seasons or sudden emergencies such as fire, flood, storm, or other unforeseen situations involving potential loss of life or property.

(6) Persons employed in field positions, the work of which is financed jointly by the Department of the Interior and cooperating persons or organizations outside the Federal service.

(7) All positions in the Bureau of Indian Affairs and other positions in the Department of the Interior directly and primarily related to providing services to Indians when filled by the appointment of Indians. The Secretary of the Interior is responsible for defining the term ''Indian.''

(8) Temporary, intermittent, or seasonal positions at GS–7 or below in Alaska, as follows: Positions in nonprofessional mining activities, such as those of drillers, miners, caterpillar operators, and samplers. Employment under this authority shall not exceed 180 working days a year and shall be appropriate only when the activity is carried on in a remote or isolated area and there is a shortage of available candidates for the positions.

(9) Temporary, part-time, or intermittent employment of mechanics, skilled laborers, equipment operators and tradesmen on construction, repair, or maintenance work not to exceed 180 working days a year in Alaska, when the activity is carried on in a remote or isolated area and there is a shortage of available candidates for the positions.

(10) Seasonal airplane pilots and airplane mechanics in Alaska, not to exceed 180 working days a year.

(11) Temporary staff positions in the Youth Conservation Corps Centers operated by the Department of the Interior. Employment under this authority shall not exceed 11 weeks a year except with prior approval of OPM.

(12) Positions in the Youth Conservation Corps for which pay is fixed at the Federal minimum wage rate. Employment under this authority may not exceed 10 weeks.

(b) (Reserved)

(c) Indian Arts and Crafts Board—

(1) The Executive Director

(d) (Reserved)

(e) Office of the Assistant Secretary, Territorial and International Affairs—

(1) (Reserved)

(2) Not to exceed four positions of Territorial Management Interns, grades GS–5, GS–7, or GS–9, when filled by territorial residents who are U.S. citizens from the Virgin Islands or Guam; U.S. nationals from American Samoa; or in the case of the Northern Marianas, will become U.S. citizens upon termination of the U.S. trusteeship. Employment under this authority may not exceed 6 months.

(3) (Reserved)

(4) Special Assistants to the Governor of American Samoa who perform specialized administrative, professional, technical, and scientific duties as members of his or her immediate staff.

(f) National Park Service—

(1) (Reserved)

(2) Positions established for the administration of Kalaupapa National Historic Park, Molokai, Hawaii, when filled by appointment of qualified patients and Native Hawaiians, as provided by Public Law 95–565.

(3) Seven full-time permanent and 31 temporary, part-time, or intermittent positions in the Redwood National Park, California, which are needed for rehabilitation of the park, as provided by Public Law 95–250.

(4) One Special Representative of the Director.

(5) All positions in the Grand Portage National Monument, Minnesota, when filled by the appointment of recognized members of the Minnesota Chippewa Tribe.

(g) Bureau of Reclamation—

(1) Appraisers and examiners employed on a temporary, intermittent, or part-time basis on special valuation or prospective-entrymen-review projects where knowledge of local values on conditions or other specialized qualifications not possessed by regular Bureau employees are required for successful results. Employment under this provision shall not exceed 130 working days a year in any individual case: Provided, that such employment may, with prior approval of OPM, be extended for not to exceed an additional 50 working days in any single year.

(h) Office of the Deputy Assistant Secretary for Territorial Affairs—

(1) Positions of Territorial Management Interns, GS–5, when filled by persons selected by the Government of the Trust Territory of the Pacific Islands. No appointment may extend beyond 1 year.

13. Department of Agriculture (Sch. A, 213.3113)

(a) General—

(1) Agents employed in field positions the work of which is financed jointly by the Department and cooperating persons, organizations, or governmental agencies outside the Federal service. Except for positions for which selection is jointly made by the Department and the cooperating organization, this authority is not applicable to positions in the Agricultural Research Service or the National Agricultural Statistics Service. This authority is not applicable to the following positions in the Agricultural Marketing Service: Agricultural commodity grader (grain) and (meat), (poultry), and (dairy), agricultural commodity aid (grain), and tobacco inspection positions.

(2)–(4) (Reserved)

(5) Temporary, intermittent, or seasonal employment in the field service of the Department in positions at and below GS–7 and WG–10 in the following types of positions: Field assistants for sub professional services; agricultural helpers, helper-leaders, and workers in the Agricultural Research Service and the Animal and Plant Health Inspection Service; and subject to prior OPM approval granted in the calendar year in which the appointment is to be made, other clerical, trades, crafts, and manual labor positions. Total employment under this subparagraph may not exceed 180 working days in a service year: Provided, that an employee may work as many as 220 working days in a service year when employment beyond 180 days is required to cope with extended fire seasons or sudden emergencies such as fire, flood, storm, or other unforeseen situations involving potential loss of life or property. This paragraph does not cover trades, crafts, and manual labor positions covered by paragraph (i) of Sec. 213.3102 or positions within the Forest Service.

(6)–(7) (Reserved)

(b)–(c) (Reserved)

(d) Farm Service Agency—

(1) (Reserved)

(2) Members of State Committees: Provided, that employment under this authority shall be limited to temporary intermittent (WAE) positions whose principal duties involve administering farm programs within the State consistent with legislative and Departmental requirements and reviewing national procedures and policies for adaptation at State and local levels within established parameters. Individual appointments under this authority are for 1 year and may be extended only by the Secretary of Agriculture or his designee. Members of State Committees serve at the pleasure of the Secretary.

(e) Rural Development—

(1) (Reserved)

(2) County committeemen to consider, recommend, and advise with respect to the Rural Development program.

(3)–(5) (Reserved)

(6) Professional and clerical positions in the Trust Territory of the Pacific Islands when occupied by indigenous residents of the Territory to provide financial assistance pursuant to current authorizing statutes.

(f) Agricultural Marketing Service—

(1) Positions of Agricultural Commodity Graders, Agricultural Commodity Technicians, and Agricultural Commodity Aids at grades GS–9 and below in the tobacco, dairy, and poultry commodities; Meat Acceptance Specialists, GS–11 and below; Clerks, Office Automation Clerks, and Computer Clerks at GS–5 and below; Clerk-Typists at grades GS–4 and below; and Laborers under the Wage System. Employment under this authority is limited to either 1,280 hours or 180 days in a service year.

(2) Positions of Agricultural Commodity Graders, Agricultural Commodity Technicians, and Agricultural Commodity Aids at grades GS–11 and below in the cotton, raisin, peanut, and processed and fresh fruit and vegetable commodities and the following positions in support of these commodities: Clerks, Office Automation Clerks, and Computer Clerks and Operators at GS–5 and below; Clerk-Typists at grades GS–4 and below; and, under the Federal Wage System, High Volume Instrumentation (HVI) Operators and HVI Operator Leaders at WG/WL–2 and below, respectively, Instrument Mechanics/Workers/Helpers at WG–10 and below, and Laborers. Employment under this authority may not exceed 180 days in a service year. In unforeseen situations such as bad weather or crop conditions, unanticipated plant demands, or increased imports, employees may work up to 240 days in a service year. Cotton Agricultural Commodity Graders, GS–5, may be employed as trainees for the first appointment for an initial period of 6 months for training without regard to the service year limitation.

(3) Milk Market Administrators.

(4) All positions on the staffs of the Milk Market Administrators.

(g)–(k) (Reserved)

(l) Food Safety and Inspection Service—

(1)–(2) (Reserved)

(3) Positions of Meat and Poultry Inspectors (Veterinarians at GS–11 and below and non-Veterinarians at appropriate grades below GS–11) for employment on a temporary, intermittent, or seasonal basis, not to exceed 1,280 hours a year.

(m) Grain Inspection, Packers and Stockyards Administration—

(1) One hundred and fifty positions of Agricultural Commodity Aid (Grain), GS–2/4; 100 positions of Agricultural Commodity Technician (Grain), GS–4/7; and 60 positions of Agricultural Commodity Grader (Grain), GS–5/9, for temporary employment on a part-time, intermittent, or seasonal basis not to exceed 1,280 hours in a service year.

(n) Alternative Agricultural Research and Commercialization Corporation—

(1) Executive Director.

14. Department of Commerce (Sch. A, 213.3114)

(a) General—

(1)–(2) (Reserved)

(3) Not to exceed 50 scientific and technical positions whose duties are performed primarily in the Antarctic. Incumbents of these positions may be stationed in the continental United States for periods of orientation, training, analysis of data, and report writing.

(b)–(c) (Reserved)

(d) Bureau of the Census—

(1) Managers, supervisors, technicians, clerks, interviewers, and enumerators in the field service, for time-limited employment to conduct a census.

(2) Current Program Interviewers employed in the field service.

(e)–(h) (Reserved)

(i) Office of the Under Secretary for International Trade—

(1) Fifteen positions at GS–12 and above in specialized fields relating to international trade or commerce in units under the jurisdiction of the Under Secretary for International Trade. Incumbents will be assigned to advisory rather than to operating duties, except as operating and administrative responsibility may be required for the conduct of pilot studies or special projects. Employment under this authority will not exceed 2 years for an individual appointee.

(2) (Reserved)

(3) Not to exceed 15 positions in grades GS–12 through GS–15, to be filled by persons qualified as industrial or marketing specialists; who possess specialized knowledge and experience in industrial production, industrial operations and related problems, market structure and trends, retail and wholesale trade practices, distribution channels and costs, or business financing and credit procedures applicable to one or more of the current segments of U.S. industry served by the Under Secretary for International Trade, and the subordinate components of his organization which are involved in Domestic Business matters. Appointments under this authority may be made for a period not to exceed 2 years and may, with prior OPM approval, be extended for an additional 2 years.

(j) National Oceanic and Atmospheric Administration—

(1)–(2) (Reserved)

(3) All civilian positions on vessels operated by the National Ocean Service.

(4) Temporary positions required in connection with the surveying operations of the field service of the National Ocean Service. Appointment to such positions shall not exceed 8 months in any 1 calendar year.

(k) (Reserved)

(l) National Telecommunication and Information Administration—

(1) Thirty-eight professional positions in grades GS–13 through GS–15.

15. Department of Labor (Sch. A, 213.3115)

(a) Office of the Secretary—

(1) Chairman and five members, Employees' Compensation Appeals Board.

(2) Chairman and eight members, Benefits Review Board.

(b)–(c) (Reserved)

(d) Employment and Training Administration—

(1) Not to exceed 10 positions of Supervisory Manpower Development Specialist and Manpower Development Specialist, GS–7/15, in the Division of Indian and Native American Programs, when filled by the appointment of persons of one-fourth or more Indian blood. These positions require direct contact with Indian tribes and communities for the development and administration of comprehensive employment and training programs.

16. Department of Health and Human Services (Sch. A, 213.3116)

(a) General—

(1) Intermittent positions, at GS–15 and below and WG–10 and below, on teams under the National Disaster Medical System including Disaster Medical Assistance Teams and specialty teams, to respond to disasters, emergencies, and incidents/events involving medical, mortuary and public health needs.

(b) Public Health Service—

(1) (Reserved)

(2) Positions at Government sanatoria when filled by patients during treatment or convalescence.

(3) (Reserved)

(4) Positions concerned with problems in preventive medicine financed or participated in by the Department of Health and Human Services and a cooperating State, county, municipality, incorporated organization, or an individual in which at least one-half of the expense is

contributed by the participating agency either in salaries, quarters, materials, equipment, or other necessary elements in the carrying on of the work.

(5)–(6) (Reserved)

(7) Not to exceed 50 positions associated with health screening programs for refugees.

(8) All positions in the Public Health Service and other positions in the Department of Health and Human Services directly and primarily related to providing services to Indians when filled by the appointment of Indians. The Secretary of Health and Human Services is responsible for defining the term ''Indian.''

(9) (Reserved)

(10) Health care positions of the National Health Service Corps for employment of any one individual not to exceed 4 years of service in health manpower shortage areas.

(11)–(14) (Reserved)

(15) Not to exceed 200 staff positions, GS–15 and below, in the Immigration Health Service, for an emergency staff to provide health related services to foreign entrants.

(c)–(e) (Reserved)

(f) The President's Council on Physical Fitness—

(1) Four staff assistants.

17. Department of Education (Sch. A, 213.3117)

(a) Positions concerned with problems in education financed and participated in by the Department of Education and a cooperating State educational agency, or university or college, in which there is joint responsibility for selection and supervision of employees, and at least one-half of the expense is contributed by the cooperating agency in salaries, quarters, materials, equipment, or other necessary elements in the carrying on of the work.

18. Board of Governors, Federal Reserve System (Sch. A, 213.3118)

(a) All positions.

27. Department of Veterans Affairs (Sch. A, 213.3127)

(a) Construction Division—

(1) Temporary construction workers paid from ''purchase and hire'' funds and appointed for not to exceed the duration of a construction project.

(b) Alcoholism Treatment Units and Drug Dependence Treatment Centers—

(1) Not to exceed 400 positions of rehabilitation counselors, GS–3 through GS–11, in Alcoholism Treatment Units and Drug Dependence Treatment Centers, when filled by former patients.

(c) Board of Veterans' Appeals—

(1) Positions, GS–15, when filled by a member of the Board. Except as provided by section 201(d) of Public Law 100–687, appointments under this authority shall be for a term of 9 years, and may be renewed.

(2) Positions, GS–15, when filled by a non-member of the Board who is awaiting Presidential approval for appointment as a Board member.

(d) Vietnam Era Veterans Readjustment Counseling Service—

(1) Not to exceed 600 positions at grades GS–3 through GS–11, involved in the Department's Vietnam Era Veterans Readjustment Counseling Service.

40. Small Business Administration (Sch. A, 213.3140)

(a) When the President under 42 U.S.C. 1855–1855g, the Secretary of Agriculture under 7 U.S.C. 1961, or the Small Business Administration under 15 U.S.C. 636(b)(1) declares an area to be a disaster area, positions filled by time-limited appointment of employees to make and administer disaster loans in the area under the Small Business Act, as amended. Service under this authority may not exceed 4 years, and no more than 2 years may be spent on a single disaster. Exception to this time limit may only be made with prior Office of Personnel Management approval. Appointments under this authority may not be used to extend the 2-year service limit contained below. No one may be appointed under this authority to positions engaged in long-term maintenance of loan portfolios.

(b) When the President under 42 U.S.C. 1855–1855g, the Secretary of Agriculture under 7 U.S.C. 1961, or the Small Business Administration under 15 U.S.C. 636(b)(1) declares an area to be a disaster area, positions filled by time-limited appointment of employees to make and administer disaster loans in that area under the Small Business Act, as amended. No one may serve under this authority for more than an aggregate of 2 years without a break in service of at least 6 months. Persons who have had more than 2 years of service under paragraph (a) of this section must have a break in service of at least 8 months following such service before appointment under this authority. No one may be appointed under this authority to positions engaged in long-term maintenance of loan portfolios.

33. Federal Deposit Insurance Corporation (Sch. A, 213.3133)

(a)–(b) (Reserved)

(c) Temporary or time-limited positions located at closed banks or savings and loan institutions that are concerned with liquidating the assets of the institutions, liquidating loans to the institutions, or paying the depositors of closed insured institutions. Time-limited appointments under this authority may not exceed 7 years.

36. U.S. Soldiers' and Airmen's Home (Sch. A, 3136)

(a) (Reserved)

(b) Positions when filled by member-residents of the Home.

46. Selective Service System (Sch. A, 213.3146)

(a) State Directors

48. National Aeronautics and Space Administration (Sch. A, 213.3148)

(a) One hundred and fifty alien scientists having special qualifications in the fields of aeronautical and space research where such employment is deemed by the Administrator of the National Aeronautics and Space Administration to be necessary in the public interest.

55. Social Security Administration (Sch. A, 213.3155)

(a) Arizona District Offices—

(1) Six positions of Social Insurance Representative in the district offices of the Social Security Administration in the State of Arizona when filled by the appointment of persons of one-fourth or more Indian blood.

(b) New Mexico—

(1) Seven positions of Social Insurance Representative in the district offices of the Social Security Administration in the State of New Mexico when filled by the appointment of persons of one-fourth or more Indian blood.

(c) Alaska—

(1) Two positions of Social Insurance Representative in the district offices of the Social Security Administration in the State of Alaska when filled by the appointments of persons of one-fourth or more Alaskan Native blood (Eskimos, Indians, or Aleuts).

62. The President's Crime Prevention Council (Sch. A, 213.3162)

(a) (Reserved)

65. Chemical Safety and Hazard Investigation Board (Sch. A, 213.3165)

(a) (Reserved)

(b) (Reserved)

66. Court Services and Offender Supervision Agency of the District of Columbia

(a) (Reserved, expired 3/31/2004).

70. Millennium Challenge Corporation (MCC) (Sch. A, 213.3170)

(a) (Reserved, expired 9/30/2007)

(b)(1) Positions of Resident Country Directors and Deputy Resident Country

Directors. The length of appointments will correspond to the length or term of the compact agreements made between the MCC and the country in which the MCC will work, plus one additional year to cover pre- and post-compact agreement related activities.

74. Smithsonian Institution (Sch. A, 213.3174)

(a) (Reserved)

(b) Smithsonian Tropical Research Institute—All positions located in Panama which are part of or which support the Smithsonian Tropical Research Institute.

(c) National Museum of the American Indian—Positions at GS–15 and below requiring knowledge of, and experience in, tribal customs and culture. Such positions comprise approximately 10 percent of the Museum's positions and, generally, do not include secretarial, clerical, administrative, or program support positions.

75. Woodrow Wilson International Center for Scholars (Sch. A, 213.3175)

(a) One Asian Studies Program Administrator, one International Security Studies Program Administrator, one Latin American Program Administrator, one Russian Studies Program Administrator, one West European Program Administrator, one Environmental Change & Security Studies Program Administrator, one United States Studies Program Administrator, two Social Science Program Administrators, and one Middle East Studies Program Administrator.

78. Community Development Financial Institutions Fund (Sch. A, 213.3178)

(a) (Reserved, expired 9/23/1998)

80. Utah Reclamation and Conservation Commission (Sch. A, 213.3180)

(a) Executive Director.

82. National Foundation on the Arts and the Humanities (Sch. A, 213.3182)

(a) National Endowment for the Arts—

(1) Artistic and related positions at grades GS–13 through GS–15 engaged in the review, evaluation and administration of applications and grants supporting the arts, related research and assessment, policy and program development, arts education, access programs and advocacy or evaluation of critical arts projects and outreach programs. Duties require artistic stature, in-depth knowledge of arts disciplines and/or artistic-related leadership qualities.

90. African Development Foundation (Sch. A, 213.3190)

(a) One Enterprise Development Fund Manager. Appointment is limited to four years unless extended by OPM.

91. Office of Personnel Management (Sch. A, 213.3191)

(a)–(c) (Reserved)

(d) Part-time and intermittent positions of test examiners at grades GS–8 and below.

94. Department of Transportation (Sch. A, 213.3194)

(a) U.S. Coast Guard—

(1) (Reserved)

(2) Lamplighters.

(3) Professors, Associate Professors, Assistant Professors, Instructors, one Principal Librarian, one Cadet Hostess, and one Psychologist (Counseling) at the Coast Guard Academy, New London, Connecticut.

(b)–(d) (Reserved)

(e) Maritime Administration—

(1)-(2) (Reserved)

(3) All positions on Government-owned vessels or those bareboats chartered to the Government and operated by or for the Maritime Administration.

(4)–(5) (Reserved)

(6) U.S. Merchant Marine Academy, positions of: Professors, Instructors, and Teachers, including heads of Departments of Physical Education and Athletics, Humanities, Mathematics and Science, Maritime Law and Economics, Nautical Science, and Engineering; Coordinator of Shipboard Training; the Commandant of Midshipmen, the Assistant Commandant of Midshipmen; Director of Music; three Battalion Officers; three Regimental Affairs Officers; and one Training Administrator.

(7) U.S. Merchant Marine Academy positions of: Associate Dean; Registrar; Director of Admissions; Assistant Director of Admissions; Director, Office of External Affairs; Placement Officer; Administrative Librarian; Shipboard Training Assistant; three Academy Training Representatives; and one Education Program Assistant.

95. Federal Emergency Management Agency (Sch. A, 213.3195)

(a) Field positions at grades GS–15 and below, or equivalent, which are engaged in work directly related to unique response efforts to environmental emergencies not covered by the Disaster Relief Act of 1974, Public Law 93–288, as amended. Employment under this authority may not exceed 36 months on any single emergency. Persons may not be employed under this authority for long-term duties or for work not directly necessitated by the emergency response effort.

(b) Not to exceed 30 positions at grades GS–15 and below in the Offices of Executive Administration, General Counsel, Inspector General, Comptroller, Public Affairs, Personnel, Acquisition Management, and the State and Local Program and Support Directorate which are engaged in work directly related to unique response efforts to environmental emergencies not covered by the Disaster Relief Act of 1974, Public Law 93–288, as amended. Employment under this authority may not exceed 36 months on any single emergency, or for long-term duties or work not directly necessitated by the emergency response effort. No one may be reappointed under this authority for service in connection with a different emergency unless at least 6 months have elapsed since the individual's latest appointment under this authority.

(c) Not to exceed 350 professional and technical positions at grades GS–5 through GS–15, or equivalent, in Mobile Emergency Response Support Detachments (MERS).

Schedule B

03. Executive Office of the President (Sch. B, 213.3203)

(a) (Reserved)

(b) Office of the Special Representative for Trade Negotiations—

(1) Seventeen positions of economist at grades GS–12 through GS–15.

04. Department of State (Sch. B, 213.3204)

(a) (1) One non-permanent senior level position to serve as Science and Technology Advisor to the Secretary.

(b)–(c) (Reserved)

(d) Seventeen positions on the household staff of the President's Guest House (Blair and Blair-Lee Houses).

(e) (Reserved)

(f) Scientific, professional, and technical positions at grades GS–12 to GS–15 when filled by persons having special qualifications in foreign policy matters. Total employment under this authority may not exceed 4 years.

05. Department of the Treasury (Sch. B, 213.3205)

(a) Positions of Deputy Comptroller of the Currency, Chief National Bank Examiner, Assistant Chief National Bank Examiner, Regional Administrator of National Banks, Deputy Regional Administrator of National Banks, Assistant to the Comptroller of the Currency, National Bank Examiner,

Associate National Bank Examiner, and Assistant National Bank Examiner, whose salaries are paid from assessments against national banks and other financial institutions.

(b)–(c) (Reserved)

(d) Positions concerned with the protection of the life and safety of the President and members of his immediate family, or other persons for whom similar protective services are prescribed by law, when filled in accordance with special appointment procedures approved by OPM. Service under this authority may not exceed:

(1) A total of 4 years; or

(2) 120 days following completion of the service required for conversion under Executive Order 11203.

(e) Positions, grades GS–5 through 12, of Treasury Enforcement Agent in the Bureau of Alcohol, Tobacco, and Firearms; and Treasury Enforcement Agent, Pilot, Marine Enforcement Officer, and Aviation Enforcement Officer in the U.S. Customs Service. Service under this authority may not exceed 3 years and 120 days.

06. Department of Defense (Sch. B, 213.3206)

(a) Office of the Secretary—

(1) (Reserved)

(2) Professional positions at GS–11 through GS–15 involving systems, costs, and economic analysis functions in the Office of the Assistant Secretary (Program Analysis and Evaluation); and in the Office of the Deputy Assistant Secretary (Systems Policy and Information) in the Office of the Assistant Secretary (Comptroller).

(3)–(4) (Reserved)

(5) Four Net Assessment Analysts.

(b) Interdepartmental activities—

(1) Seven positions to provide general administration, general art and information, photography, and/or visual information support to the White House Photographic Service.

(2) Eight positions, GS–15 or below, in the White House Military Office, providing support for airlift operations, special events, security, and/or administrative services to the Office of the President.

(c) National Defense University—

(1) Sixty-one positions of Professor, GS–13/15, for employment of any one individual on an initial appointment not to exceed 3 years, which may be renewed in any increment from 1 to 6 years indefinitely thereafter.

(d) General—

(1) One position of Law Enforcement Liaison Officer (Drugs), GS–301–15, U.S. European Command.

(2) Acquisition positions at grades GS–5 through GS–11, whose incumbents have successfully completed the required course of education as participants in the Department of Defense scholarship program authorized under 10 U.S.C. 1744.

(e) Office of the Inspector General—

(1) Positions of Criminal Investigator, GS–1811–5/15.

(f) Department of Defense Polygraph Institute, Fort McClellan, Alabama—

(1) One Director, GM–15.

(g) Defense Security Assistance Agency—

All faculty members with instructor and research duties at the Defense Institute of Security Assistance Management, Wright Patterson Air Force Base, Dayton, Ohio. Individual appointments under this authority will be for an initial 3-year period, which may be followed by an appointment of indefinite duration.

07. Department of the Army (Sch. B, 213.3207)

(a) U.S. Army Command and General Staff College—

(1) Seven positions of professors, instructors, and education specialists. Total employment of any individual under this authority may not exceed 4 years.

08. Department of the Navy (Sch. B, 213.3208)

(a) Naval Underwater Systems Center, New London, Connecticut—

(1) One position of Oceanographer, grade GS–14, to function as project director and manager for research in the weapons systems applications of ocean eddies.

(b) Armed Forces Staff College, Norfolk, Virginia—All civilian faculty positions of professors, instructors, and teachers on the staff of the Armed Forces Staff College, Norfolk, Virginia.

(c) Defense Personnel Security Research and Education Center—One Director and four Research Psychologists at the professor or GS–15 level.

(d) Marine Corps Command and Staff College—All civilian professor positions.

(e) Executive Dining facilities at the Pentagon—One position of Staff Assistant, GS–301, whose incumbent will manage the Navy's Executive Dining facilities at the Pentagon.

(f) (Reserved)

09. Department of the Air Force (Sch. B, 213.3209)

(a) Air Research Institute at the Air University, Maxwell Air Force Base, Alabama—Not to exceed four interdisciplinary positions for the Air Research Institute at the Air University, Maxwell Air Force Base, Alabama, for employment to complete studies proposed by candidates and acceptable to the Air Force. Initial appointments are made not to exceed 3 years, with an option to renew or extend the appointments in increments of 1, 2, or 3 years indefinitely thereafter.

(b)–(c) (Reserved)

(d) Air University—Positions of Instructor or professional academic staff at the Air University associated with courses of instruction of varying durations, for employment not to exceed 3 years, which may be renewed for an indefinite period thereafter.

(e) U.S. Air Force Academy, Colorado—One position of Director of Development and Alumni Programs, GS–301–13.

10. Department of Justice (Sch. B, 213.3210)

(a) Drug Enforcement Administration—

Criminal Investigator (Special Agent) positions in the Drug Enforcement Administration. New appointments may be made under this authority only at grades GS–5 through 11. Service under the authority may not exceed 4 years. Appointments made under this authority may be converted to career or career-conditional appointments under the provisions of Executive Order 12230, subject to conditions agreed upon between the Department and OPM.

(b) (Reserved)

(c) Not to exceed 400 positions at grades GS–5 through 15 assigned to regional task forces established to conduct special investigations to combat drug trafficking and organized crime.

(d) (Reserved)

(e) United States Trustees—Positions, other than secretarial, GS–6 through GS–15, requiring knowledge of the bankruptcy process, on the staff of the offices of United States Trustees or the Executive Office for U.S. Trustees.

13. Department of Agriculture (Sch. B, 213.3213)

(a) Foreign Agricultural Service—

(1) Positions of a project nature involved in international technical assistance activities. Service under this authority may not exceed 5 years on a single project for any individual unless delayed completion of a project justifies an extension up to but not exceeding 2 years.

(b) General—

(1) Temporary positions of professional Research Scientists, GS–15 or below, in the Agricultural Research Service, Economic Research Service,

and the Forest Service, when such positions are established to support the Research Associateship Program and are filled by persons having a doctoral degree in an appropriate field of study for research activities of mutual interest to appointees and the agency. Appointments are limited to proposals approved by the appropriate Administrator. Appointments may be made for initial periods not to exceed 2 years and may be extended for up to 2 additional years. Extensions beyond 4 years, up to a maximum of 2 additional years, may be granted, but only in very rare and unusual circumstances, as determined by the Human Resources Officer for the Research, Education, and Economics Mission Area, or the Human Resources Officer, Forest Service.

(2) Not to exceed 55 Executive Director positions, GM–301–14/15, with the State Rural Development Councils in support of the Presidential Rural Development Initiative.

14. Department of Commerce (Sch. B, 213.3214)

(a) Bureau of the Census—

(1) (Reserved)

(2) Not to exceed 50 Community Services Specialist positions at the equivalent of GS–5 through 12.

(b)–(c) (Reserved)

(d) National Telecommunications and Information Administration—

(1) Not to exceed 10 Telecommunications Policy Analysts, grades GS–11 through 15. Employment under this authority may not exceed 2 years.

15. Department of Labor (Sch. B, 213.3215)

(a) Administrative Review Board—Chair and a maximum of four additional Members.

(b) (Reserved)

(c) Bureau of International Labor Affairs—

(1) Positions in the Office of Foreign Relations, which are paid by outside funding sources under contracts for specific international labor market technical assistance projects. Appointments under this authority may not be extended beyond the expiration date of the project.

17. Department of Education (Sch. B, 213.3217)

(a) Seventy-five positions, not to exceed GS–13, of a professional or analytical nature when filled by persons, other than college faculty members or candidates working toward college degrees, who are participating in mid-career development programs authorized by Federal statute or regulation, or sponsored by private nonprofit organizations, when a period of work experience is a requirement for completion of an organized study program. Employment under this authority shall not exceed 1 year.

(b) Fifty positions, GS–7 through GS–11, concerned with advising on education policies, practices, and procedures under unusual and abnormal conditions. Persons employed under this provision must be bona fide elementary school and high school teachers. Appointments under this authority may be made for a period of not to exceed 1 year, and may, with the prior approval of the Office of Personnel Management, be extended for an additional period of 1 year.

27. Department of Veterans Affairs (Sch. B, 213.3227)

(a) Not to exceed 800 principal investigatory, scientific, professional, and technical positions at grades GS–11 and above in the medical research program.

(b) Not to exceed 25 Criminal Investigator (Undercover) positions, GS–1811, in grades 5 through 12, conducting undercover investigations in the Veterans Health Administration (VA) supervised by the VA, Office of Inspector General. Initial appointments shall be greater than 1 year, but not to exceed 4 years and may be extended indefinitely in 1-year increments.

28. Broadcasting Board of Governors (Sch. B, 213.3228)

(a) International Broadcasting Bureau—

(1) Not to exceed 200 positions at grades GS–15 and below in the Office of Cuba Broadcasting. Appointments may not be made under this authority to administrative, clerical, and technical support positions.

36. U.S. Soldiers' and Airmen's Home (Sch. B, 213.3236)

(a) (Reserved)

(b) Director, Health Care Services; Director, Member Services; Director, Logistics; and Director, Plans and Programs.

40. National Archives and Records Administration (Sch. B, 213.3240)

(a) Executive Director, National Historical Publications and Records Commission.

48. National Aeronautics and Space Administration (Sch. B, 213.3248)

(a) Not to exceed 40 positions of Astronaut Candidates at grades GS–11 through 15. Employment under this authority may not exceed 3 years.

55. Social Security Administration (Sch. B, 213.3255)

(a) (Reserved)

74. Smithsonian Institution (Sch. B, 213.3274)

(a) (Reserved)

(b) Freer Gallery of Art—

(1) Not to exceed four Oriental Art Restoration Specialists at grades GS–9 through GS–15.

76. Appalachian Regional Commission (Sch. B, 213.3276)

(a) Two Program Coordinators.

78. Armed Forces Retirement Home (Sch. B, 213.3278)

(a) Naval Home, Gulfport, Mississippi—

(1) One Resource Management Officer position and one Public Works Officer position, GS/GM–15 and below.

82. National Foundation on the Arts and the Humanities (Sch. B, 213.3282)

(a) (Reserved)

(b) National Endowment for the Humanities—

(1) Professional positions at grades GS–11 through GS–15 engaged in the review, evaluation, and administration of grants supporting scholarship, education, and public programs in the humanities, the duties of which require in-depth knowledge of a discipline of the humanities.

91. Office of Personnel Management (Sch. B, 213.3291)

(a) Not to exceed eight positions of Associate Director at the Executive Seminar Centers at grades GS–13 and GS–14. Appointments may be made for any period up to 3 years and may be extended without prior approval for any individual. Not more than half of the authorized faculty positions at any one Executive Seminar Center may be filled under this authority.

(b) Federal Executive Institute—Twelve positions of faculty members at grades GS–13 through 15. Initial appointments under this authority may be made for any period up to 3 years and may be extended in 1, 2, or 3-year increments indefinitely thereafter.

SCHEDULE C

Agency name	Organization name	Position title	Authorization No.	Effective date
ADMINISTRATIVE CONFERENCE OF THE UNITED STATES.	Administrative Conference of the United States.	Executive Assistant	AA100001	7/2/2010
DEPARTMENT OF AGRICULTURE.	Office of the Assistant Secretary for Administration.	Special Assistant	DA100149	7/19/2010
	Office of the Deputy Secretary	Confidential Assistant	DA100155	7/21/2010
	Rural Housing Service	Special Assistant	DA100156	7/9/2010
	Farm Service Agency	Chief of Staff	DA100160	8/26/2010
	Farm Service Agency	Confidential Assistant	DA100161	8/26/2010
	Risk Management Agency	Confidential Assistant	DA100162	8/26/2010
	Office of the Secretary	Senior Program Manager for Global Food Security.	DA100165	9/2/2010
	Office of the Under Secretary for Marketing and Regulatory Programs.	Chief of Staff	DA100166	9/9/2010
	Farm Service Agency	Confidential Assistant	DA100167	11/3/2010
	Office of the Deputy Secretary	Special Assistant	DA100169	11/3/2010
	Office of the Under Secretary for Food Safety.	Chief of Staff	DA100171	10/20/2010
	Farm Service Agency	Confidential Assistant	DA100172	9/9/2010
	Food Safety and Inspection Service.	Senior Advisor	DA100176	11/3/2010
	Office of Under Secretary for Natural Resources and Environment.	Chief of Staff	DA110001	10/19/2010
	Office of Communications	Press Secretary	DA110003	10/29/2010
	Office of the Secretary	White House Liaison	DA110004	11/4/2010
	Office of the Assistant Secretary for Congressional Relations.	Staff Assistant	DA110007	1/14/2011
	Office of the Under Secretary for Marketing and Regulatory Programs.	Special Assistant	DA110008	11/15/2010
	Office of the General Counsel	Senior Counselor	DA110009	12/10/2010
	Office of the Assistant Secretary for Civil Rights.	Special Assistant	DA110011	12/1/2010
	Office of Communications	Press Secretary	DA110013	1/31/2011
	Office of Communications	Deputy Director, Operations	DA110016	12/1/2010
	Office of the Under Secretary for Rural Development.	Chief of Staff	DA110018	12/29/2010
	Office of the Assistant Secretary for Congressional Relations.	Special Assistant	DA110029	3/8/2011
	Office of the Secretary	Advisor for Special Projects	DA110037	3/24/2011
	Office of the Under Secretary Farm and Foreign Agricultural Service.	Chief of Staff	DA110040	4/4/2011
	Farm Service Agency	Special Assistant	DA110042	3/24/2011
	Rural Utilities Service	Senior Advisor	DA110047	4/4/2011
	Office of Communications	Deputy Press Secretary	DA110054	4/12/2011
	Office of Communications	Deputy Press Secretary	DA110055	4/12/2011
	Office of the Assistant Secretary for Congressional Relations.	Deputy Director, Intergovernmental Affairs.	DA110059	4/21/2011
	Rural Housing Service	Executive Director, National Food and Agriculture Council.	DA110060	4/27/2011
	Office of the Assistant Secretary for Administration.	Chief of Staff	DA110063	5/13/2011
	Office of the Under Secretary for Research, Education, and Economics.	Special Assistant	DA110068	5/19/2011
	Office of the Secretary	Deputy White House Liaison	DA110069	5/19/2011
	National Institute of Food and Agriculture.	Director of Congressional Affairs for Research, Education, and Economics and National Institute of Food and Agriculture.	DA110071	5/26/2011
APPALACHIAN REGIONAL COMMISSION.	Appalachian Regional Commission.	Policy Advisor	AP110001	5/12/2011
BROADCASTING BOARD OF GOVERNORS.	International Broadcasting Bureau	General Manager	IB110001	1/6/2011
	International Broadcasting Bureau	Confidential Assistant	IB110005	6/22/2011
DEPARTMENT OF COMMERCE	Office of the Assistant Secretary for Communications and Information.	Public Affairs Specialist	DC100097	7/7/2010

SCHEDULE C—Continued

Agency name	Organization name	Position title	Authorization No.	Effective date
	Office of White House Liaison	Deputy Director, Office of White House Liaison.	DC100098	7/1/2010
	Office of Public Affairs	Deputy Director for Public Affairs	DC100100	7/1/2010
	Office of the Under Secretary	Senior Advisor	DC100102	7/1/2010
	Office of Business Liaison	Special Assistant	DC100103	7/13/2010
	Office of the Secretary	Confidential Assistant for the Chief of Staff.	DC100105	7/15/2010
	Office of Policy and Strategic Planning.	Senior Policy Advisor	DC100107	7/22/2010
	Office of the Under Secretary	Special Assistant, National Export Initiative.	DC100108	7/22/2010
	Office of Public Affairs	Deputy Press Secretary	DC100109	7/23/2010
	Office of the Chief of Staff	Deputy Director of Scheduling	DC100111	7/27/2010
	Office of Policy and Strategic Planning.	Confidential Assistant	DC100113	7/30/2010
	Office of Legislative and Intergovernmental Affairs.	Confidential Assistant	DC100115	8/5/2010
	Office of the Chief Financial Officer and Assistant Secretary for Administration.	Senior Director for Administration	DC100116	8/10/2010
	Office of the General Counsel	Special Assistant	DC100117	8/11/2010
	Office of the Chief of Staff	Confidential Assistant	DC100120	8/20/2010
	Office of Executive Secretariat	Confidential Assistant	DC100121	8/26/2010
	Office of the Assistant Secretary for Import Administration.	Special Advisor	DC100122	8/25/2010
	International Trade Administration	Special Advisor	DC100124	8/30/2010
	Office of Public Affairs	New Media Director	DC100127	9/10/2010
	Office of the Secretary	Director of Advance	DC100128	9/24/2010
	Office of Executive Secretariat	Confidential Assistant	DC100129	9/3/2010
	Bureau of Industry and Security	Chief of Staff for Bureau of Industry and Security.	DC100131	10/4/2010
	Office of Under Secretary	Deputy Director of Policy	DC100135	9/21/2010
	National Oceanic and Atmospheric Administration.	Special Assistant	DC100136	9/22/2010
	Assistant Secretary for Market Access and Compliance.	Deputy Director of Advisory Committees.	DC100138	9/24/2010
	International Trade Administration	Special Advisor	DC100140	10/7/2010
	Office of the Assistant Secretary for Economic Development.	Special Advisor	DC100141	10/1/2010
	Office of the Assistant Secretary for Economic Development.	Special Assistant	DC100141	10/1/2010
	Office of the Under Secretary	Confidential Assistant	DC110002	10/18/2010
	Office of the Under Secretary	International Trade Administration Deputy Director for the National Export Initiative.	DC110005	10/29/2010
	Office of the Under Secretary	Director, Office of Legislative Affairs and Senior Trade Advisor.	DC110007	10/29/2010
	Office of the Under Secretary	Special Assistant	DC110010	10/25/2010
	Immediate Office	Special Assistant	DC110021	12/14/2010
	Office of White House Liaison	Deputy Director, Office of White House Liaison.	DC110025	1/7/2011
	Office of the Chief of Staff	Director, National Export Events	DC110027	2/4/2011
	Office of Business Liaison	Senior Advisor	DC110028	1/20/2011
	Office of Legislative and Intergovernmental Affairs.	Director of Legislative Affairs	DC110032	2/2/2011
	Office of the Under Secretary	Speechwriter	DC110034	2/4/2011
	Office of Assistant Secretary for Legislative and Intergovernmental Affairs.	Associate Director of Legislative Affairs.	DC110037	2/9/2011
	Office of Assistant Secretary for Legislative and Intergovernmental Affairs.	Associate Director of Legislative and Intergovernmental Affairs.	DC110038	2/4/2011
	Office of the Chief of Staff	Protocol Officer	DC110040	3/3/2011
	Office of the Assistant Secretary for Economic Development.	Senior Advisor	DC110043	3/8/2011
	National Oceanic and Atmospheric Administration.	Director, Strategic Initiatives and Partnerships.	DC110052	3/3/2011
	National Telecommunications and Information Administration.	Press Secretary	DC110065	4/4/2011
	Office of Executive Secretariat	Deputy Director, Executive Secretariat.	DC110066	4/8/2011

SCHEDULE C—Continued

Agency name	Organization name	Position title	Authorization No.	Effective date
	Office of the Under Secretary	Chief of Staff for International Trade Administration.	DC110068	5/3/2011
	International Trade Administration	Director, Office of Strategic Partnerships.	DC110073	5/19/2011
	Office of Executive Secretariat	Special Assistant	DC110074	5/19/2011
	Office of Policy and Strategic Planning.	Special Assistant	DC110086	6/16/2011
	Office of the Assistant Secretary for Manufacturing and Services.	Special Assistant	DC110088	6/8/2011
	Office of Scheduling and Advance	Confidential Assistant	DC110089	6/3/2011
	Economic Development Administration.	Special Advisor	DC110090	6/10/2011
	Office of the General Counsel	Special Assistant	DC110092	6/16/2011
	Office of the Under Secretary	Special Advisor	DC110093	6/17/2011
	Office of the Assistant Secretary for Economic Development.	Chief of Staff for Economic Development.	DC110094	6/17/2011
COMMISSION ON CIVIL RIGHTS	Staff Members	Special Assistant	CC110001	12/14/2010
	Commissioners	Special Assistant	CC110002	1/10/2011
	Staff Members	Special Assistant	CC110003	1/10/2011
	Staff Members	Special Assistant	CC110005	2/7/2011
COMMODITY FUTURES TRADING COMMISSION.	Office of the Chairperson	Administrative Assistant	CT100004	9/1/2010
	Office of the Chairperson	Administrative Assistant	CT110001	12/29/2010
	Office of the Chairperson	Director, Office of Public Affairs	CT110002	6/3/2011
	Office of the Chairperson	Public Affairs Specialist (Speechwriter).	CT110003	6/28/2011
COUNCIL ON ENVIRONMENTAL QUALITY.	Council on Environmental Quality	Special Assistant (Green Jobs)	EQ100008	7/2/2010
	Council on Environmental Quality	Special Assistant (Legislative Affairs).	EQ100009	7/2/2010
	Council on Environmental Quality	Special Assistant (Land and Water Ecosystems).	EQ100010	7/23/2010
	Council on Environmental Quality	Special Assistant	EQ100011	8/2/2010
	Council on Environmental Quality	Special Assistant	EQ110002	12/13/2010
	Council on Environmental Quality	Associate Director for Communications.	EQ110004	3/25/2011
	Council on Environmental Quality	Special Assistant (Communications).	EQ110005	6/13/2011
DEPARTMENT OF DEFENSE	Office of the Under Secretary of Defense (Acquisition, Technology, and Logistics).	Special Assistant(Industrial Policy)	DD100170	8/10/2010
	Office of the Under Secretary of Defense (Personnel and Readiness).	Special Assistant	DD100174	7/29/2010
	Washington Headquarters Services.	Staff Assistant	DD100183	8/24/2010
	Office of the Under Secretary of Defense (Comptroller).	Special Assistant (Budget and Appropriations Affairs).	DD100185	8/17/2010
	Washington Headquarters Services.	Defense Fellow	DD100188	8/13/2010
	Washington Headquarters Services.	Defense Fellow	DD100189	8/13/2010
	Washington Headquarters Services.	Defense Fellow	DD100190	8/13/2010
	Washington Headquarters Services.	Defense Fellow	DD100194	9/10/2010
	Washington Headquarters Services.	Defense Fellow	DD100201	9/10/2010
	Office of the Under Secretary of Defense (Acquisition, Technology, and Logistics).	Special Assistant (Nuclear, Chemical and Biological Defense Programs).	DD100204	9/22/2010
	Office of Assistant Secretary of Defense (Public Affairs).	Speechwriter	DD100205	9/17/2010
	Office of Assistant Secretary of Defense (Public Affairs).	Deputy Director for Communication Plans and Integration.	DD100210	10/8/2010
	Office of Assistant Secretary of Defense (Reserve Affairs).	Special Assistant for Reserve Affairs.	DD100212	11/8/2010
	Office of the Assistant Secretary of Defense (International Security Affairs).	Special Assistant	DD110001	10/8/2010
	Office of Assistant Secretary of Defense (Legislative Affairs).	Special Assistant	DD110004	10/25/2010

SCHEDULE C—Continued

Agency name	Organization name	Position title	Authorization No.	Effective date
	Washington Headquarters Services.	Defense Fellow	DD110006	11/16/2010
	Office of Assistant Secretary of Defense (Public Affairs).	Associate Director for Communication Plans and Integration.	DD110012	11/18/2010
	Office of the Under Secretary of Defense (Policy).	Senior Communications Advisor for the Under Secretary of Defense.	DD110019	12/3/2010
	Office of Assistant Secretary of Defense (Public Affairs).	Strategic Planner	DD110026	12/13/2010
	Washington Headquarters Services.	Defense Fellow	DD110027	12/13/2010
	Washington Headquarters Services.	Defense Fellow	DD110030	12/22/2010
	Office of Assistant Secretary of Defense (Legislative Affairs).	Special Assistant	DD110041	2/28/2011
	Office of the Under Secretary of Defense (Personnel and Readiness).	Special Assistant for Reserve Affairs.	DD110042	2/28/2011
	Washington Headquarters Services.	Defense Fellow	DD110047	3/9/2011
	Washington Headquarters Services.	Defense Fellow	DD110048	3/10/2011
	Office of Assistant Secretary of Defense (Legislative Affairs).	Special Assistant	DD110049	3/9/2011
	Office of the Secretary	Special Assistant	DD110050	3/9/2011
	Office of the Assistant Secretary of Defense (Asian and Pacific Security Affairs).	Director, Pakistan	DD110052	3/9/2011
	Office of the Secretary	Special Assistant	DD110053	3/11/2011
	Office of the Under Secretary of Defense (Policy).	Special Assistant (Policy)	DD110054	3/22/2011
	Office of the Under Secretary of Defense (Policy).	Special Advisor (Detainee Policy)	DD110055	4/15/2011
	Washington Headquarters Services.	Defense Fellow	DD110056	3/22/2011
	Washington Headquarters Services.	Defense Fellow	DD110057	3/22/2011
	Washington Headquarters Services.	Defense Fellow	DD110070	5/18/2011
	Office of the General Counsel	Special Counsel	DD110073	6/3/2011
	Office of the Secretary	Deputy White House Liaison	DD110074	5/20/2011
	Office of Assistant Secretary of Defense (Legislative Affairs).	Special Assistant	DD110076	6/3/2011
	Office of the Under Secretary of Defense (Comptroller).	Special Assistant	DD110078	6/17/2011
DEPARTMENT OF THE AIR FORCE.	Office of the Under Secretary	Special Assistant	DF100056	7/2/2010
	Office of the Secretary	Special Assistant	DF100072	8/23/2010
	Office of Assistant Secretary Air Force, Installations, Environment, and Logistics.	Special Assistant	DF100073	8/23/2010
	Office of Assistant Secretary Air Force, Installations, Environment, and Logistics.	Special Assistant	DF110014	3/21/2011
	Office of the Secretary	Executive Speechwriter	DF110016	3/23/2011
DEPARTMENT OF THE ARMY	Office Assistant Secretary Army (Installations and Environment).	Special Advisor (Installations and Environments).	DW110001	10/19/2010
DEPARTMENT OF THE NAVY	Office of the Secretary	Special Assistant	DN110007	12/21/2010
	Office of the Secretary	Special Assistant	DN110008	12/21/2010
	Office of the Under Secretary of the Navy.	Special Assistant	DN110010	1/5/2011
	Office of the Assistant Secretary of Navy (Manpower and Reserve Affairs).	Special Assistant	DN110011	1/18/2011
	Office of the Under Secretary of the Navy.	Special Assistant	DN110012	2/8/2011
	Department of the Navy	Special Assistant	DN110016	4/20/2011
DEPARTMENT OF EDUCATION	Office of the Deputy Secretary	Special Assistant	DB100071	7/2/2010
	Office of Safe and Drug-Free Schools.	Confidential Assistant	DB100072	7/20/2010

SCHEDULE C—Continued

Agency name	Organization name	Position title	Authorization No.	Effective date
	Office of Planning, Evaluation and Policy Development.	Special Assistant	DB100074	7/15/2010
	Office of the Secretary	Special Assistant	DB100075	7/16/2010
	Office of Safe and Drug-Free Schools.	Confidential Assistant	DB100078	7/16/2010
	Office of the Deputy Secretary	Confidential Assistant	DB100080	7/20/2010
	Office of Elementary and Secondary Education.	Confidential Assistant	DB100081	7/28/2010
	Office of the General Counsel	Confidential Assistant	DB100084	7/28/2010
	Office of Vocational and Adult Education.	Special Assistant	DB100087	7/28/2010
	Office of the Under Secretary	Confidential Assistant	DB100089	8/16/2010
	Office of Postsecondary Education.	Confidential Assistant	DB100091	8/20/2010
	Office of Elementary and Secondary Education.	Special Assistant	DB100092	10/1/2010
	Office of Elementary and Secondary Education.	Confidential Assistant	DB100094	10/28/2010
	Office of the Secretary	Confidential Assistant	DB100095	10/1/2010
	Office of Safe and Drug-Free Schools.	Confidential Assistant	DB100096	10/1/2010
	Office of the Deputy Secretary	Confidential Assistant	DB100097	9/24/2010
	Office for Civil Rights	Confidential Assistant	DB110002	10/15/2010
	Office of the Secretary	Confidential Assistant	DB110003	10/29/2010
	Office of Vocational and Adult Education.	Confidential Assistant	DB110004	10/29/2010
	Office of the Secretary	Deputy Chief of Staff	DB110006	11/29/2010
	Office for Civil Rights	Chief of Staff	DB110007	11/29/2010
	Office of the Under Secretary	Confidential Assistant	DB110008	12/10/2010
	Office of the Secretary	Confidential Assistant	DB110011	12/10/2010
	Office of the Under Secretary	Director of the Center for Faith-Based and Neighborhood Partnerships.	DB110012	12/10/2010
	Office of Special Education and Rehabilitative Services.	Confidential Assistant	DB110015	2/8/2011
	Office of the Under Secretary	Confidential Assistant	DB110017	1/28/2011
	Office of Vocational and Adult Education.	Confidential Assistant	DB110018	1/28/2011
	Office of the Deputy Secretary	Special Assistant	DB110019	2/10/2011
	Office of the Deputy Secretary	Special Assistant	DB110020	2/11/2011
	Office of the Deputy Secretary	Deputy Director Program Management and Performance Unit.	DB110021	2/8/2011
	Office of the Under Secretary	Deputy Director of the White House Initiative on Tribal Colleges and Universities.	DB110022	1/28/2011
	Office of Planning, Evaluation and Policy Development.	Special Assistant	DB110024	1/28/2011
	Office of English Language Acquisition, Language Enhancement, and Academic Achievement for Limited English Proficient Students.	Deputy Director	DB110025	2/4/2011
	Office of Legislation and Congressional Affairs.	Special Assistant	DB110029	2/11/2011
	Office of Legislation and Congressional Affairs.	Confidential Assistant	DB110030	2/11/2011
	Office of Planning, Evaluation and Policy Development.	Confidential Assistant	DB110031	2/11/2011
	Office of Communications and Outreach.	Confidential Assistant	DB110032	2/23/2011
	Office of Vocational and Adult Education.	Special Assistant	DB110033	4/11/2011
	Office of the Secretary	Confidential Assistant	DB110040	3/18/2011
	Office of Planning, Evaluation and Policy Development.	Special Assistant	DB110041	4/4/2011
	Office of Communications and Outreach.	Confidential Assistant	DB110042	3/18/2011
	Office of Communications and Outreach.	Confidential Assistant	DB110043	3/18/2011
	Office of Communications and Outreach.	Confidential Assistant	DB110044	4/4/2011

SCHEDULE C—Continued

Agency name	Organization name	Position title	Authorization No.	Effective date
	Office of Safe and Drug-Free Schools.	Confidential Assistant	DB110046	3/21/2011
	Office of Elementary and Secondary Education.	Confidential Assistant	DB110047	4/4/2011
	Office of the General Counsel	Special Assistant	DB110048	4/11/2011
	Office of Innovation and Improvement.	Confidential Assistant	DB110049	3/28/2011
	Office of Planning, Evaluation and Policy Development.	Confidential Assistant	DB110050	4/4/2011
	Office of the Secretary	Special Assistant	DB110051	4/21/2011
	Office of the Secretary	Special Assistant	DB110052	4/21/2011
	Office of the Secretary	Confidential Assistant	DB110053	4/21/2011
	Office of the Secretary	Confidential Assistant	DB110055	4/21/2011
	Office of the Secretary	Confidential Assistant	DB110056	4/21/2011
	Office of the Secretary	Executive Assistant	DB110057	5/3/2011
	Office of the Deputy Secretary	Special Assistant	DB110058	4/11/2011
	Office of Safe and Drug-Free Schools.	Confidential Assistant	DB110059	4/22/2011
	Office of Legislation and Congressional Affairs.	Confidential Assistant	DB110061	5/11/2011
	Office of Legislation and Congressional Affairs.	Deputy Assistant Secretary (Oversight).	DB110062	5/3/2011
	Office of the Secretary	Deputy Chief of Staff for Operations and Strategy.	DB110063	5/2/2011
	Office of Communications and Outreach.	Deputy Press Secretary	DB110066	5/19/2011
	Office of the Secretary	Special Assistant	DB110067	5/20/2011
	Office of Legislation and Congressional Affairs.	Confidential Assistant	DB110068	5/19/2011
	Office of Planning, Evaluation and Policy Development.	Confidential Assistant	DB110069	5/19/2011
	Office of the General Counsel	Confidential Assistant	DB110070	5/19/2011
	Office of the Secretary	Confidential Assistant	DB110071	5/19/2011
	Office of the Secretary	Confidential Assistant	DB110072	5/19/2011
	Office of Planning, Evaluation and Policy Development.	Confidential Assistant	DB110073	5/19/2011
	Office of the Under Secretary	Special Assistant	DB110082	6/10/2011
	Office of the Under Secretary	Deputy Director	DB110083	6/10/2011
	Office of the Under Secretary	Special Assistant	DB110084	6/10/2011
	Office of the Under Secretary	Director of the White House Initiative on Historically Black Colleges and Universities.	DB110085	6/10/2011
	Office of the Under Secretary	Director, White House Initiative on Educational Excellence for Hispanic Americans.	DB110086	6/10/2011
	Office of the Under Secretary	Director, Faith-Based & Neighborhood Partnerships.	DB110087	6/10/2011
	Office of the General Counsel	Special Assistant	DB110088	6/3/2011
	Office of the Under Secretary	Special Assistant	DB110089	6/10/2011
	Office of the Under Secretary	Confidential Assistant	DB110090	6/10/2011
	Office of Vocational and Adult Education.	Deputy Assistant Secretary for Policy & Strategic Initiatives.	DB110091	6/21/2011
	Office of the Under Secretary	Confidential Assistant	DB110092	6/17/2011
DEPARTMENT OF ENERGY	Office of the Secretary	Senior Advisor	DE100094	7/7/2010
	Assistant Secretary for Congressional and Intergovernmental Affairs.	Deputy Assistant Secretary for Senate Affairs.	DE100106	7/7/2010
	Office of Management	Special Assistant	DE100109	7/16/2010
	Office of the Secretary	Special Assistant	DE100116	8/3/2010
	Assistant Secretary for Congressional and Intergovernmental Affairs.	Legislative Policy Advisor	DE100117	8/3/2010
	Office of Management	Trip Coordinator	DE100129	9/8/2010
	Assistant Secretary for Congressional and Intergovernmental Affairs.	Director for Tribal and Intergovernmental Affairs.	DE100136	10/12/2010
	Assistant Secretary for Energy Efficiency and Renewable Energy.	Senior Advisor	DE110001	10/20/2010
	Office of Electricity Delivery and Energy Reliability.	Senior Advisor	DE110007	11/23/2010

SCHEDULE C—Continued

Agency name	Organization name	Position title	Authorization No.	Effective date
	Office of Management	Director, Office of Scheduling and Advance.	DE110016	1/5/2011
	Office of Management	Special Advisor	DE110017	1/10/2011
	Office of Public Affairs	Chief Speechwriter	DE110018	12/22/2010
	Assistant Secretary for Congressional and Intergovernmental Affairs.	Legislative Affairs Specialist	DE110021	1/18/2011
	Office of the Secretary	Special Assistant	DE110023	1/6/2011
	Assistant Secretary for Congressional and Intergovernmental Affairs.	Senior Advisor	DE110033	1/26/2011
	Office of the Under Secretary	Senior Advisor	DE110034	1/26/2011
	Under Secretary for Science	Special Assistant	DE110035	1/28/2011
	Loan Programs Office	Assistant Director for External Relations.	DE110036	2/23/2011
	National Nuclear Security Administration.	Deputy Director of Public Affairs	DE110041	2/23/2011
	National Nuclear Security Administration.	Director of Congressional Affairs	DE110047	2/23/2011
	Office of the Secretary	Special Assistant	DE110055	3/3/2011
	Office of the Chief Financial Officer.	Special Assistant	DE110059	3/14/2011
	Office of the Deputy Secretary	Special Assistant	DE110063	3/21/2011
	Office of Public Affairs	Deputy Press Secretary	DE110070	4/20/2011
	Office of Electricity Delivery and Energy Reliability.	Special Assistant	DE110072	4/21/2011
	Office of Nuclear Energy, Science and Technology.	Special Assistant	DE110084	5/11/2011
	Office of General Counsel	Senior Counsel	DE110085	5/19/2011
	Office of Public Affairs	Press Assistant	DE110092	6/3/2011
	Office of Assistant Secretary for Policy and International Affairs.	Special Assistant	DE110093	5/24/2011
	Assistant Secretary for Energy Efficiency and Renewable Energy.	Special Assistant	DE110107	6/15/2011
	Office of the Deputy Secretary	Special Assistant	DE110108	6/15/2011
	Office of the Secretary	Special Assistant	DE110109	6/24/2011
	Office of General Counsel	Staff Assistant	DE110112	6/21/2011
	National Nuclear Security Administration.	Senior Advisor	DE110115	6/21/2011
	Office of Management	Special Assistant	DE110117	6/22/2011
ENVIRONMENTAL PROTECTION AGENCY.	Office of the Associate Administrator for Policy.	Special Assistant for Policy, Economics and Innovation.	EP100070	7/7/2010
	Advance Staff	Advance Specialist	EP100072	7/7/2010
	Office of the Associate Administrator for Congressional and Intergovernmental Relations.	Deputy Associate Administrator for Office of Congressional Affairs.	EP100075	8/20/2010
	Office of the Administrator	Deputy White House Liaison	EP100077	8/27/2010
	Office of the Associate Administrator for External Affairs and Environmental Education.	Senior Advisor for External Affairs and Environmental Education.	EP100083	9/17/2010
	Office of the Associate Administrator for External Affairs and Environmental Education.	Deputy Press Secretary	EP100084	9/17/2010
	Office of the Associate Administrator for External Affairs and Environmental Education.	Senior Advisor on External Communication.	EP100085	9/23/2010
	Office of the Associate Administrator for External Affairs and Environmental Education.	Press Secretary	EP100086	9/23/2010
	Operations Staff	Director, Operations Staff	EP100088	10/1/2010
	Scheduling Staff	Deputy Director of Scheduling	EP110002	10/12/2010
	Office of the Associate Administrator for External Affairs and Environmental Education.	Deputy Associate Administrator for the Office of External Affairs and Environmental Education.	EP110005	10/27/2010
	Office of the Associate Administrator for External Affairs and Environmental Education.	Assistant Press Secretary	EP110009	11/23/2010
	Office of the Associate Administrator for Congressional and Intergovernmental Relations.	Senior Advisor	EP110018	2/18/2011

SCHEDULE C—Continued

Agency name	Organization name	Position title	Authorization No.	Effective date
	Office of the Associate Administrator for External Affairs and Environmental Education.	Special Assistant	EP110019	3/25/2011
	Office of the Associate Administrator for External Affairs and Environmental Education.	Assistant Press Secretary	EP110020	4/4/2011
	Office of the Associate Administrator for External Affairs and Environmental Education.	Director, Office of Public Engagement.	EP110021	4/21/2011
	Office of the Administrator	Policy Analyst	EP110022	5/2/2011
	Advance Staff	Deputy Director for Advance	EP110032	6/16/2011
	Office of the Associate Administrator for Congressional and Intergovernmental Relations.	Special Assistant	EP110033	6/16/2011
	Advance Staff	Advance Specialist	EP110034	6/13/2011
	Office of the Associate Administrator for Congressional and Intergovernmental Relations.	Deputy Associate Administrator for Office of Congressional Affairs.	EP110039	6/24/2011
EQUAL EMPLOYMENT OPPORTUNITY COMMISSION.	Office of the Chair	Senior Policy Analyst	EE100006	7/30/2010
EXPORT–IMPORT BANK	Office of Communications	Senior Vice President, Communications.	EB100005	9/3/2010
	Office of Communications	Speechwriter	EB110001	10/15/2010
	Board of Directors	Senior Advisor	EB110002	11/15/2010
	Board of Directors	Deputy Chief of Staff	EB110003	11/19/2010
	Board of Directors	Executive Secretary	EB110004	12/6/2010
	Office of the Executive Vice President.	Senior Vice President of Congressional Affairs.	EB110005	12/14/2010
	Office of Communications	Senior Advisor	EB110007	3/10/2011
	Board of Directors	Senior Advisor	EB110008	6/3/2011
	Office of the General Counsel	Senior Vice President and General Counsel.	EB110009	5/27/2011
	Board of Directors	Special Assistant	EB110010	6/9/2011
FEDERAL COMMUNICATIONS COMMISSION.	Office Strategic Planning and Policy Analysis.	Advisor	FC100012	8/17/2010
	Office of Media Relations	Communications Director	FC110005	4/26/2011
FEDERAL ENERGY REGULATORY COMMISSION.	Office of External Affairs	Deputy Director, Office of External Affairs.	DR100017	10/29/2010
	Office of the Chairman	Confidential Assistant	DR110005	5/19/2011
FEDERAL MINE SAFETY AND HEALTH REVIEW COMMISSION.	Office of the Chairman	Confidential Assistant	FR100001	7/13/2010
	Office of the Commissioners	Attorney Advisor (General)	FR110001	11/10/2010
GENERAL SERVICES ADMINISTRATION.	Northeast and Caribbean Region	Regional Administrator	GS100030	9/9/2010
	Northeast and Caribbean Region	Special Assistant	GS100036	7/20/2010
	Office of Communications and Marketing.	Press Secretary	GS100038	7/27/2010
	Office of the Administrator	White House Liaison	GS100044	9/3/2010
	Great Lakes Region	Special Assistant	GS100046	9/24/2010
	Pacific Rim Region	Special Assistant	GS100047	9/24/2010
	Office of Small Business Utilization.	Special Assistant	GS100048	9/24/2010
	Office of the Administrator	Special Assistant	GS100050	10/6/2010
	New England Region	Special Assistant	GS110001	11/29/2010
	The Heartland Region	Special Assistant	GS110002	11/29/2010
	Office of Congressional and Intergovernmental Affairs.	Special Assistant	GS110003	11/18/2010
	New England Region	Regional Administrator	GS110005	3/9/2011
	Great Lakes Region	Regional Administrator	GS110006	1/7/2011
	Office of Communications and Marketing.	Associate Administrator for Communications and Marketing.	GS110010	12/29/2010
	Mid-Atlantic Region	Special Assistant	GS110024	2/18/2011
	Office of Congressional and Intergovernmental Affairs.	Deputy Associate Administrator for Policy.	GS110025	2/18/2011
	Office of Congressional and Intergovernmental Affairs.	Deputy Associate Administrator for Legislative Affairs.	GS110026	2/18/2011
	Office of Communications and Marketing.	Press Secretary	GS110029	3/11/2011
	Office of Communications and Marketing.	Deputy Press Secretary	GS110030	3/9/2011

SCHEDULE C—Continued

Agency name	Organization name	Position title	Authorization No.	Effective date
	Office of Communications and Marketing.	Director of Public Engagement	GS110031	3/9/2011
	Office of the Administrator	White House Liaison	GS110033	3/22/2011
	Pacific Rim Region	Regional Administrator	GS110043	6/2/2011
GOVERNMENT PRINTING OFFICE.	Office of the Public Printer	Executive Assistant	GP110001	4/26/2011
DEPARTMENT OF HEALTH AND HUMAN SERVICES.	Office of the Assistant Secretary for Public Affairs.	Speechwriter (Health Reform)	DH100179	7/7/2010
	Office of the Assistant Secretary for Public Affairs.	Special Assistant (Health Reform)	DH100180	7/8/2010
	Office of the Secretary	Confidential Assistant	DH100184	7/12/2010
	Office of the Deputy Secretary	Special Assistant (To the Director, Intergovernmental Affairs).	DH100190	8/10/2010
	Office of the Deputy Secretary	Regional Director, Atlanta, Georgia, Region IV.	DH100193	9/2/2010
	Office of the Secretary	Confidential Assistant	DH100194	8/13/2010
	Office of the Assistant Secretary for Legislation.	Confidential Assistant (Health)	DH100195	8/13/2010
	Centers for Medicare and Medicaid Services.	Special Assistant, Centers for Medicare and Medicaid Services.	DH100196	8/16/2010
	Office of the Secretary	Confidential Assistant	DH100207	10/8/2010
	Office of the Assistant Secretary for Public Affairs.	Special Assistant for Public Affairs	DH110004	3/11/2011
	Office of Global Health Affairs	Special Assistant, Office of Global Health Affairs.	DH110005	10/15/2010
	Office of the Assistant Secretary for Children and Families.	Confidential Assistant for Early Childhood Development.	DH110012	11/23/2010
	Centers for Medicare and Medicaid Services.	Confidential Assistant, Centers for Medicare and Medicaid Services.	DH110013	12/10/2010
	Office of the Assistant Secretary for Legislation.	Special Assistant	DH110014	12/10/2010
	Office of the Secretary	Special Assistant	DH110022	1/20/2011
	Office of the General Counsel	Special Assistant	DH110031	1/7/2011
	Office of the Assistant Secretary for Planning and Evaluation.	Senior Advisor Center for Faith-Based and Neighborhood Partnerships.	DH110033	1/20/2011
	Administration on Aging	Confidential Assistant	DH110040	1/18/2011
	Office of Public Affairs	Senior Advisor, Office of Public Affairs, Administration for Children and Families.	DH110053	2/28/2011
	Center for Consumer Information and Insurance Oversight.	Senior Advisor	DH110057	2/28/2011
	Office of the Assistant Secretary for Children and Families.	Director of Public Affairs	DH110070	4/4/2011
	Office of the Assistant Secretary for Planning and Evaluation.	Director of Delivery System Reform.	DH110075	6/14/2011
	Office of the Secretary	Confidential Assistant	DH110077	4/26/2011
	Office of the Assistant Secretary for Health.	Director of Communications	DH110104	6/14/2011
	Office of the Assistant Secretary for Public Affairs.	Communications Director for Health Care.	DH110106	6/17/2011
	Office of the Assistant Secretary for Children and Families.	Special Assistant for Children and Families.	DH110108	6/30/2011
DEPARTMENT OF HOMELAND SECURITY.	Office of the Chief of Staff	Scheduling and Advance Assistant.	DM100270	7/19/2010
	Office of the Secretary	Special Advisor	DM100283	7/19/2010
	Office of the Under Secretary for National Protection and Programs Directorate.	Special Counselor	DM100296	8/9/2010
	Office of the Assistant Secretary for Policy.	Confidential Assistant	DM100331	9/29/2010
	Office of the Assistant Secretary for Public Affairs.	New Media Specialist	DM100332	9/22/2010
	Office of the Under Secretary for National Protection and Programs Directorate.	Special Assistant, National Protection and Programs Directorate.	DM100338	9/23/2010
	U.S. Citizenship and Immigration Services.	Counselor	DM100340	9/28/2010

SCHEDULE C—Continued

Agency name	Organization name	Position title	Authorization No.	Effective date
	U.S. Citizenship and Immigration Services.	Counselor	DM100341	9/29/2010
	Federal Emergency Management Agency.	Confidential Assistant	DM110006	11/16/2010
	Office of Assistant Secretary for Legislative Affairs.	Senior Advisor for Legislative Affairs.	DM110010	11/3/2010
	Office of the Executive Secretary for Operations and Administration.	Secretary Briefing Book Coordinator.	DM110023	12/13/2010
	Office of the Assistant Secretary for Public Affairs.	Press Assistant	DM110026	12/13/2010
	Office of the General Counsel	Special Assistant	DM110028	12/13/2010
	Immediate Office of the Deputy Secretary.	Special Assistant	DM110030	12/29/2010
	Office of the Assistant Secretary for Public Affairs.	Deputy Assistant Secretary for Strategic Communications.	DM110031	12/22/2010
	Office of the Assistant Secretary for Policy.	Special Assistant	DM110033	2/2/2011
	Office of the Assistant Secretary for Policy.	Director, Homeland Security Advisory Council.	DM110056	1/27/2011
	Office of the Assistant Secretary for Public Affairs.	Press Secretary	DM110060	1/27/2011
	Office of the Assistant Secretary for Public Affairs.	Director of Special Projects	DM110061	1/27/2011
	Office of the Assistant Secretary for Public Affairs.	Assistant Press Secretary	DM110064	1/27/2011
	Office of the Assistant Secretary for Public Affairs.	Assistant Press Secretary	DM110065	1/27/2011
	Office of the Chief of Staff	White House Liaison	DM110075	2/11/2011
	Office of the Under Secretary for National Protection and Programs Directorate.	Senior Cybersecurity Strategist	DM110091	3/22/2011
	Office of the General Counsel	Special Advisor	DM110095	3/11/2011
	Office of the Assistant Secretary for Policy.	Policy Analyst	DM110097	3/14/2011
	Office of the Chief of Staff	Liaison for Community Partnership and Strategic Engagement.	DM110110	3/17/2011
	Office of the Assistant Secretary for Policy.	Senior Advisor	DM110112	3/16/2011
	Office of the Under Secretary for Intelligence and Analysis.	Liaison	DM110115	3/25/2011
	Office of Counternarcotics Enforcement.	Counselor	DM110118	3/23/2011
	Office of the General Counsel	Special Assistant and Attorney Advisor.	DM110120	3/28/2011
	Office of the Assistant Secretary for Public Affairs.	Press Assistant	DM110127	4/12/2011
	Office of the Chief of Staff	Confidential Assistant	DM110138	5/4/2011
	Office of the Secretary	Special Assistant	DM110139	5/6/2011
	Office of the Chief of Staff	Special Assistant	DM110141	5/4/2011
	Office of the Assistant Secretary for Policy.	Special Assistant	DM110151	5/4/2011
	Office of Assistant Secretary for Legislative Affairs.	Legislative Affairs Specialist	DM110160	5/13/2011
	Office of the Chief of Staff	Deputy White House Liaison	DM110161	5/18/2011
	Office of the Assistant Secretary for Public Affairs.	Public Affairs and Strategic Communications Assistant.	DM110163	5/12/2011
	Office of the Chief of Staff	Special Assistant	DM110169	5/13/2011
	U.S. Immigration and Customs Enforcement.	Special Assistant	DM110170	5/19/2011
	Office of Assistant Secretary for Legislative Affairs.	Legislative Affairs Specialist	DM110173	5/18/2011
	Office of the Assistant Secretary for Public Affairs.	Director of Special Projects	DM110174	5/27/2011
	Office of the Assistant Secretary for Public Affairs.	Advisor for Strategic Planning and Coordination.	DM110175	5/20/2011
	Office of the Under Secretary for National Protection and Programs Directorate.	Program Coordinator	DM110192	6/14/2011
	Office of the Assistant Secretary for Policy.	Special Assistant	DM110195	6/3/2011

SCHEDULE C—Continued

Agency name	Organization name	Position title	Authorization No.	Effective date
	U.S. Customs and Border Protection.	Counselor	DM110203	6/13/2011
	Office of the Under Secretary for National Protection and Programs Directorate.	Special Advisor	DM110208	6/29/2011
DEPARTMENT OF HOUSING AND URBAN DEVELOPMENT.	Office of the Administration	Staff Assistant	DU100093	7/22/2010
	Office of Field Policy and Management.	Confidential Assistant	DU100097	8/26/2010
	Office of Community Planning and Development.	Special Assistant	DU100098	7/29/2010
	Office of Congressional and Intergovernmental Relations.	Congressional Relations Specialist.	DU100102	8/10/2010
	Office of Public Affairs	Internal Communications Specialist.	DU100103	8/26/2010
	Office of the Administration	Special Assistant	DU100104	8/5/2010
	Office of the Secretary	Director of Scheduling	DU100109	9/7/2010
	Office of Public Affairs	Press Assistant	DU100110	9/7/2010
	Office of Public Affairs	Media Outreach Specialist	DU100112	9/29/2010
	Office of Strategic Planning and Management.	Division Director Performance Management.	DU100114	9/29/2010
	Office of Housing	Senior Advisor for Housing Policy and Programs.	DU100115	10/28/2010
	Mid-Atlantic (Philadelphia)	Regional Administrator	DU110001	11/10/2010
	Great Plains (Kansas City)	Regional Administrator	DU110002	11/5/2010
	Office of Sustainable Housing and Communities.	Senior Advisor	DU110004	12/10/2010
	Office of Strategic Planning and Management.	Senior Policy Advisor	DU110006	11/18/2010
	Office of Congressional and Intergovernmental Relations.	Intergovernmental and Public Engagement Liaison.	DU110007	11/23/2010
	Office of the Administration	Staff Assistant	DU110010	12/10/2010
	Office of Policy Development and Research.	Special Assistant	DU110011	12/21/2010
	Office of Housing	Special Assistant	DU110012	1/6/2011
	Office of the General Counsel	Senior Counsel	DU110014	1/26/2011
	Office of the General Counsel	Senior Counsel	DU110016	2/18/2011
	New England (Boston)	Regional Administrator	DU110018	4/19/2011
	Office of the General Counsel	Special Assistant	DU110021	5/6/2011
	Office of the Secretary	White House Liaison	DU110022	5/18/2011
	Office of Policy Development and Research.	Special Policy Advisor	DU110026	6/15/2011
DEPARTMENT OF THE INTERIOR.	Assistant Secretary—Land and Minerals Management.	Deputy Chief of Staff	DI100046	8/13/2010
	Secretary's Immediate Office	Deputy Director, Office of Communications/Press Secretary.	DI100062	7/8/2010
	Bureau of Ocean Energy Management, Regulation and Enforcement.	Director of Communications	DI100066	7/19/2010
	Assistant Secretary—Land and Minerals Management.	Counselor—Land and Minerals Management.	DI100067	7/28/2010
	Secretary's Immediate Office	Deputy Director Office of Communications.	DI100069	7/20/2010
	Office of the Deputy Secretary	Counselor	DI100071	7/30/2010
	Secretary's Immediate Office	Deputy Director, Intergovernmental Affairs.	DI100072	8/5/2010
	Bureau of Ocean Energy Management, Regulation and Enforcement.	Special Assistant	DI100074	8/10/2010
	Bureau of Ocean Energy Management, Regulation and Enforcement.	Special Assistant	DI100088	9/10/2010
	Secretary's Immediate Office	White House Liaison	DI100092	10/1/2010
	Secretary's Immediate Office	Special Assistant	DI110001	10/15/2010
	Secretary's Immediate Office	Special Assistant	DI110002	10/15/2010
	Assistant Secretary—Indian Affairs.	Senior Advisor- Indian Affairs	DI110004	10/22/2010
	Office of the Deputy Secretary	Special Assistant	DI110013	12/22/2010
	Secretary's Immediate Office	Deputy Director, Intergovernmental Affairs.	DI110022	1/31/2011
	Office of the Solicitor	Attorney-Advisor	DI110032	2/4/2011

SCHEDULE C—Continued

Agency name	Organization name	Position title	Authorization No.	Effective date
	Assistant Secretary—Indian Affairs.	Deputy Chief of Staff	DI110033	2/17/2011
	Office of Congressional and Legislative Affairs.	Special Assistant	DI110037	2/23/2011
	Bureau of Ocean Energy Management, Regulation and Enforcement.	Senior Advisor	DI110041	3/8/2011
	Secretary's Immediate Office	Special Assistant for Advance	DI110049	4/20/2011
	Secretary's Immediate Office	Special Assistant	DI110050	5/11/2011
	Assistant Secretary—Water and Science.	Counselor—Water and Science	DI110071	6/28/2011
DEPARTMENT OF JUSTICE	Office of the Associate Attorney General.	Senior Counsel	DJ100143	7/22/2010
	Office of Legislative Affairs	Legislative Assistant	DJ100152	7/28/2010
	Office on Violence Against Women.	Confidential Assistant	DJ100155	8/2/2010
	Office of the Deputy Attorney General.	Confidential Assistant	DJ100159	8/11/2010
	Civil Division	Counsel	DJ100160	7/1/2010
	Office of Public Affairs	Public Affairs Specialist	DJ100162	8/9/2010
	Antitrust Division	Counsel	DJ100163	8/16/2010
	Civil Rights Division	Counsel	DJ100167	8/13/2010
	Office of the Associate Attorney General.	Counsel	DJ100169	8/13/2010
	Office of the Attorney General	Special Assistant	DJ100170	8/13/2010
	Office of Legislative Affairs	Attorney Advisor	DJ100171	8/26/2010
	Office of the Deputy Attorney General.	Senior Counsel	DJ100172	12/21/2010
	Office of Legal Policy	Research Assistant	DJ100174	9/13/2010
	Criminal Division	Counsel	DJ100175	9/8/2010
	Civil Rights Division	Counsel	DJ100176	9/24/2010
	Office of the Attorney General	Counsel	DJ100179	9/10/2010
	Office of Intergovernmental and Public Liaison.	Special Assistant	DJ100182	3/31/2011
	Office of Justice Programs	Director, Faith-Based and Neighborhood Partnerships.	DJ110002	10/13/2010
	Civil Division	Senior Counsel	DJ110009	10/15/2010
	Office of Justice Programs	Special Assistant	DJ110010	10/29/2010
	Civil Division	Counsel	DJ110015	11/23/2010
	Office of Public Affairs	Press Assistant	DJ110023	12/29/2010
	Office of the Deputy Attorney General.	Counsel	DJ110025	12/30/2010
	Office of Legal Policy	Counsel	DJ110027	12/30/2010
	Office of Legislative Affairs	Attorney Advisor	DJ110034	1/26/2011
	Office of Intergovernmental and Public Liaison.	Associate Director	DJ110043	3/31/2011
	Office of Public Affairs	Deputy Speechwriter	DJ110054	2/18/2011
	Office of the Legal Counsel	Senior Counsel	DJ110065	4/20/2011
	Office of Justice Programs	Chief of Staff	DJ110069	4/29/2011
	Office of Intergovernmental and Public Liaison.	Associate Director	DJ110077	5/23/2011
	Office of the Deputy Attorney General.	Senior Counsel	DJ110094	6/14/2011
	Office of the Deputy Attorney General.	Senior Counsel	DJ110095	6/15/2011
DEPARTMENT OF LABOR	Office of the Secretary	Special Assistant	DL100058	7/2/2010
	Office of the Deputy Secretary	Special Assistant	DL100060	8/2/2010
	Office of Labor—Management Standards.	Special Assistant	DL100061	8/2/2010
	Wage and Hour Division	Senior Advisor	DL100064	8/9/2010
	Office of Congressional and Intergovernmental Affairs.	Regional Representative—Denver	DL100067	9/13/2010
	Office of Labor—Management Standards.	Special Assistant	DL100072	9/28/2010
	Office of Congressional and Intergovernmental Affairs.	Senior Legislative Officer	DL100075	10/1/2010
	Office of the Deputy Secretary	Special Assistant	DL110001	10/22/2010
	Office of Public Affairs	Speechwriter	DL110003	11/4/2010
	Wage and Hour Division	Chief of Staff	DL110005	1/7/2011
	Office of the Secretary	Scheduler	DL110006	11/23/2010

SCHEDULE C—Continued

Agency name	Organization name	Position title	Authorization No.	Effective date
	Office of Congressional and Intergovernmental Affairs.	Senior Legislative Officer	DL110008	12/17/2010
	Bureau of International Labor Affairs.	Deputy Chief of Staff	DL110009	2/25/2011
	Office of Congressional and Intergovernmental Affairs.	Deputy Director of Intergovernmental Affairs.	DL110011	1/28/2011
	Wage and Hour Division	Senior Advisor	DL110012	2/17/2011
	Office of the Secretary	Special Assistant	DL110017	3/18/2011
	Office of the Secretary	Lead Scheduler	DL110019	3/23/2011
	Office of the Secretary	Assistant	DL110021	3/30/2011
	Employment and Training Administration.	Chief of Staff	DL110022	4/7/2011
	Office of Disability Employment Policy.	Chief of Staff	DL110023	4/15/2011
	Office of Public Affairs	Speech Writer	DL110025	4/21/2011
	Office of the Secretary	Briefing Book	DL110027	4/29/2011
	Office of the Assistant Secretary for Policy.	Special Assistant	DL110028	6/10/2011
	Office of Congressional and Intergovernmental Affairs.	Senior Legislative Officer	DL110030	5/13/2011
	Office of the Solicitor	Senior Counselor	DL110031	5/9/2011
	Office of Public Affairs	Special Assistant	DL110034	5/19/2011
NATIONAL AERONAUTICS AND SPACE ADMINISTRATION.	Office of the Administrator	Special Advisor	NN110021	6/7/2011
	Office of the Deputy Administrator	Executive Officer	NN110051	6/7/2011
NATIONAL CREDIT UNION ADMINISTRATION.	National Credit Union Administration.	Staff Assistant	CU100007	8/5/2010
	Office of the Board	Staff Assistant	CU110002	1/6/2011
	National Credit Union Administration.	Director, Public and Congressional Affairs/Chief Policy Advisor.	CU110004	1/10/2011
NATIONAL ENDOWMENT FOR THE ARTS.	National Endowment for the Arts	Special Assistant for Congressional Affairs.	NA110001	4/21/2011
NATIONAL ENDOWMENT FOR THE HUMANITIES.	National Endowment for the Humanities.	Confidential Assistant	NH100003	9/23/2010
NATIONAL TRANSPORTATION SAFETY BOARD.	Office of Board Members	Special Assistant	TB100013	9/8/2010
OCCUPATIONAL SAFETY AND HEALTH REVIEW COMMISSION.	Office of Commissioners	Counsel	SH100004	10/1/2010
	Office of Commissioners	Counsel	SH110001	3/10/2011
OFFICE OF MANAGEMENT AND BUDGET.	Communications	Confidential Assistant	BO100045	9/8/2010
	General Government Programs	Confidential Assistant	BO100047	10/7/2010
	Legislative Affairs	Deputy for Legislative Affairs	BO110005	1/21/2011
	Office of Information and Regulatory Affairs.	Counselor	BO110008	1/21/2011
	Office of the Director	Confidential Assistant	BO110010	2/23/2011
	Office of the Director	Confidential Assistant, Government Reorganization Initiative.	BO110012	2/22/2011
	Legislative Affairs	Legislative Assistant	BO110014	4/8/2011
	Office of the Director	Special Assistant	BO110017	4/20/2011
	Communications	Press Assistant	BO110023	6/10/2011
OFFICE OF NATIONAL DRUG CONTROL POLICY.	Intergovernmental Public Liaison	Policy Analyst	QQ100012	7/15/2010
	State, Local and Tribal Affairs	Senior Policy Analyst	QQ100013	7/7/2010
	Office of Intergovernmental Public Liaison.	Outreach and Events Coordinator	QQ100014	8/19/2010
	Office of Public Affairs	Associate Director for Public Affairs.	QQ100015	9/7/2010
	Intergovernmental Public Liaison	Policy Analyst	QQ110002	1/26/2011
	Office of Public Affairs	Public Affairs Specialist (Deputy Press Secretary).	QQ110004	3/22/2011
OFFICE OF PERSONNEL MANAGEMENT.	Office of Personnel Management	Press Secretary	PM110007	4/26/2011
OFFICE OF THE UNITED STATES TRADE REPRESENTATIVE.	Office of the Ambassador	Confidential Assistant	TN100007	8/2/2010
	Office of the Ambassador	Director of Scheduling and Advance.	TN100009	8/2/2010
	Congressional Affairs	Director of Congressional Affairs	TN100012	9/10/2010
	Office of the Ambassador	Special Assistant for Scheduling	TN110003	2/2/2011
	Office of the United States Trade Representative.	Personal Assistant	TN110010	6/2/2011
SECURITIES AND EXCHANGE COMMISSION.	Office of the Chairman	Confidential Assistant	SE110001	10/13/2010
	Office of the Chairman	Confidential Assistant	SE110002	2/17/2011

SCHEDULE C—Continued

Agency name	Organization name	Position title	Authorization No.	Effective date
	Division of Investment Management.	Confidential Assistant	SE110004	5/17/2011
	Securities and Exchange Commission.	Confidential Assistant	SE110005	5/15/2011
SMALL BUSINESS ADMINISTRATION.	Office of Government Contracting and Business Development.	Director of Hubzone	SB100039	7/12/2010
	Office of Field Operations	Regional Administrator, Region IX, San Francisco.	SB100040	7/30/2010
	Office of Capital Access	Special Assistant for Capital Access.	SB100041	8/10/2010
	Office of Entrepreneurial Development.	Senior Advisor for Entrepreneurial Development.	SB100042	8/17/2010
	Office of Capital Access	Senior Advisor for Capital Access	SB100044	9/9/2010
	Office of Congressional and Legislative Affairs.	Congressional and Legislative Affairs Assistant.	SB100046	3/24/2011
	Office of Government Contracting and Business Development.	Senior Advisor for Government Contracting and Business Development.	SB110001	10/22/2010
	Office of the Administrator	Senior Advisor	SB110002	11/10/2010
	Office of Communications and Public Liaison.	Senior Communications Assistant	SB110005	12/8/2010
	Office of Field Operations	Regional Administrator, Region III, Philadelphia, PA.	SB110006	12/10/2010
	Office of the Administrator	Senior Advisor for Intergovernmental Affairs.	SB110011	1/21/2011
	Office of Congressional and Legislative Affairs.	Assistant Administrator for Congressional and Legislative Affairs.	SB110012	1/21/2011
	Office of Field Operations	Regional Administrator, Region VII, Kansas City, Missouri.	SB110013	5/17/2011
	Office of Capital Access	Deputy Associate Administrator for Capital Access.	SB110014	1/20/2011
	Office of the Administrator	Director of Scheduling and Advance.	SB110015	1/20/2011
	Office of the Administrator	Special Assistant and Scheduler	SB110016	1/21/2011
	Office of the Administrator	Special Assistant	SB110018	2/17/2011
	Office of Management and Administration.	Senior Advisor for Management and Administration.	SB110019	2/23/2011
	Office of the Administrator	Special Assistant and Scheduler	SB110021	2/28/2011
	Office of the Administrator	Senior Policy Advisor	SB110023	4/11/2011
	Office of Field Operations	Regional Administrator for Region IV.	SB110027	4/7/2011
	Office of Field Operations	Associate Administrator for Field Operations.	SB110032	6/24/2011
	Office of Congressional and Legislative Affairs.	Special Assistant for Congressional and Legislative Affairs.	SB110033	6/24/2011
SOCIAL SECURITY ADMINISTRATION.	Office of the Commissioner	Senior Advisor	SZ110035	5/12/2011
DEPARTMENT OF STATE	Office of the Chief of Protocol	Protocol Assistant	DS100053	8/16/2010
	Bureau of Western Hemisphere Affairs.	Senior Advisor	DS100056	7/19/2010
	Bureau of International Organizational Affairs.	Staff Assistant	DS100059	7/30/2010
	Foreign Policy Planning Staff	Policy Advisor/Speechwriter	DS100122	7/15/2010
	Office of the Special Envoy and Coordinator for International Energy Affairs.	Staff Assistant	DS100130	7/16/2010
	Office of Legislative Affairs	Legislative Management Officer	DS100136	7/16/2010
	Office of Legislative Affairs	Legislative Management Officer	DS100139	8/16/2010
	Bureau of Political and Military Affairs.	Staff Assistant	DS100154	10/1/2010
	Bureau for Education and Cultural Affairs.	Special Assistant	DS100155	10/4/2010
	Bureau of Overseas Buildings Operations.	Director, Art In Embassies Program.	DS110010	11/19/2010
	Foreign Policy Planning Staff	Speechwriter	DS110013	12/3/2010
	Office of the Counselor	Special Assistant	DS110046	2/23/2011
	Office of the Global Women's Initiative.	Senior Advisor	DS110047	4/19/2011
	Office to Monitor and Combat Trafficking in Persons.	Staff Assistant	DS110048	3/21/2011

SCHEDULE C—Continued

Agency name	Organization name	Position title	Authorization No.	Effective date
	Bureau of Near Eastern Affairs	Legislative Liaison Specialist	DS110052	3/30/2011
	Bureau of Economic, Energy and Business Affairs.	Special Assistant	DS110053	3/23/2011
	Office of the Under Secretary for Arms Control and International Security Affairs.	Staff Assistant	DS110054	3/16/2011
	Bureau of Public Affairs	Staff Assistant	DS110056	3/24/2011
	Bureau of International Narcotics and Law Enforcement Affairs.	Special Assistant	DS110059	3/18/2011
	Bureau for Education and Cultural Affairs.	Staff Assistant	DS110073	4/29/2011
	Bureau of Public Affairs	Senior Advisor	DS110077	5/18/2011
	Office of the Chief of Protocol	Protocol Officer (Gifts)	DS110078	5/18/2011
TRADE AND DEVELOPMENT AGENCY.	Office of the Director	Public Affairs Specialist	TD110002	1/12/2011
DEPARTMENT OF TRANSPORTATION.	Immediate Office of the Administrator.	Associate Administrator for Governmental, International, and Public Affairs.	DT100057	7/16/2010
	Secretary	Counselor	DT100061	8/2/2010
	Assistant Secretary for Transportation Policy.	Director of Public Engagement	DT110002	10/8/2010
	Office of the Secretary	Associate Director for Scheduling	DT110003	11/23/2010
	Office of the Secretary	Associate Director for Advance	DT110004	11/23/2010
	Secretary	Special Assistant for Policy	DT110005	11/23/2010
	Associate Administrator for Public Affairs.	Director of Public Affairs	DT110021	3/24/2011
	Assistant Secretary for Budget and Programs.	Deputy Assistant Secretary for Management and Budget.	DT110026	4/21/2011
	Administrator	Director of Communications	DT110028	5/13/2011
	Assistant Secretary for Governmental Affairs.	Associate Director for Governmental Affairs.	DT110041	6/2/2011
	Assistant Secretary for Governmental Affairs.	Deputy Assistant Secretary for Governmental Affairs.	DT110045	6/24/2011
	Assistant Secretary for Governmental Affairs.	Associate Director for Governmental Affairs.	DT110046	6/24/2011
DEPARTMENT OF THE TREASURY.	Assistant Secretary for Financial Stability.	Special Assistant	DY100118	7/23/2010
	Assistant Secretary (Economic Policy).	Special Assistant	DY100119	7/23/2010
	Assistant Secretary (Legislative Affairs).	Special Assistant	DY100123	7/29/2010
	Assistant Secretary (Public Affairs).	Spokesperson	DY100126	8/10/2010
	Assistant Secretary (Public Affairs).	Senior Speechwriter	DY100131	8/17/2010
	Secretary of the Treasury	Policy Advisor	DY100144	9/13/2010
	Assistant Secretary (Economic Policy).	Deputy Assistant Secretary for Microeconomic Analysis.	DY100154	10/1/2010
	Under Secretary for Domestic Finance.	Senior Advisor	DY110004	10/8/2010
	Under Secretary for Domestic Finance.	Public Affairs Specialist	DY110019	11/26/2010
	Secretary of the Treasury	Special Assistant	DY110023	12/20/2010
	Assistant Secretary for Financial Markets.	Senior Advisor	DY110039	1/31/2011
	Secretary of the Treasury	Special Assistant	DY110040	1/31/2011
	Assistant Secretary (Public Affairs).	Media Affairs Specialist	DY110043	1/31/2011
	Secretary of the Treasury	Deputy Executive Secretary	DY110060	4/1/2011
	Secretary of the Treasury	Special Assistant	DY110079	5/31/2011
	Assistant Secretary (Legislative Affairs).	Special Assistant	DY110094	6/17/2011
	Assistant Secretary (Legislative Affairs).	Special Assistant	DY110095	6/22/2011
UNITED STATES INTERNATIONAL TRADE COMMISSION.	Office of the Chairman	Staff Assistant	TC110003	2/25/2011
DEPARTMENT OF VETERANS AFFAIRS.	Office of the Secretary and Deputy.	Special Assistant	DV100086	9/28/2010

SCHEDULE C—Continued

Agency name	Organization name	Position title	Authorization No.	Effective date
	Office of the Assistant Secretary for Public and Intergovernmental Affairs.	Special Assistant	DV110004	2/7/2011
	Office of the Secretary and Deputy.	Special Assistant	DV110007	1/12/2011
	Office of the Secretary and Deputy.	Special Assistant, White House Liaison.	DV110017	2/23/2011
	Office of the Assistant Secretary for Public and Intergovernmental Affairs.	Press Secretary	DV110040	4/8/2011
INTERNATIONAL JOINT COMMISSION.	Office of the Chair	Policy Advisor	IJ110001	10/15/2010

Authority: 5 U.S.C. 3301 and 3302; E.O.10577, 3 CFR 1954–1958 Comp., p. 218.

U.S. Office of Personnel Management.

John Berry,

Director.

[FR Doc. 2012–7745 Filed 3–29–12; 8:45 am]

BILLING CODE 6325–39–P

POSTAL SERVICE

Notice of Proposed Intelligent Mail Indicia Performance Criteria With Request for Comments

AGENCY: Postal Service ™.

ACTION: Proposed change.

SUMMARY: The Postal Service is updating and consolidating the product submission procedures for Postage Evidencing Systems (PES). This involves the replacement of the current Information-Based Indicia Performance Criteria (IBI PC) with new Intelligent Mail Indicia Performance Criteria (IMI PC).

DATES: Copies of the proposed IMI PC will be available effective March 30, 2012. Comments on the proposed IMI PC must be received on or before May 30, 2012.

ADDRESSES: To receive a copy of the proposed IMI PC, mail or deliver written requests to: USPS Payment Technology/ Attn: Marlo Kay Ivey, 475 L'Enfant Plaza SW., Room 3660, Washington, DC 20260–4110. To comment on the proposed IMI PC, mail or deliver written comments to the Manager, Payment Technology, USPS, 475 L'Enfant Plaza SW., Room 3436, Washington, DC 20260–4110. Copies of all written comments will be available, by appointment, for inspection and photocopying between 9 a.m. and 4 p.m., Monday through Friday, at the Payment Technology office.

FOR FURTHER INFORMATION CONTACT: Marlo Kay Ivey, Business Programs Specialist, Payment Technology, U.S. Postal Service, at 202–268–7613.

SUPPLEMENTARY INFORMATION: Current product submission procedures and the IBI PC are approximately 10 years old and have had little or no substantive updates since being initially provided to the PES (postage meter and PC Postage®) industry. The PES environment has changed substantially with availability of new technology to offer new PES products designed to meet new customer needs for access to postage. In addition, changes within the United States Postal Service® (USPS®) infrastructure have taken place to provide enhanced opportunities for PES providers to propose new concepts, methods, and processes to enable customers to print pre-paid evidence of postage while improving the efficiency and effectiveness of Postal Service operations.

The Postal Service proposes to replace the current PES product submission procedures and the IBI PC with the proposed IMI PC Document (the ''Document''). This Document is comprised of four volumes to support the USPS PES Test and Evaluation Program (the ''Program''). The intent is for the volumes to fully support each other but not be redundant in content.

Volume I—PES Requirements. Provides the PES industry and test laboratories with the information, requirements, and guidance necessary to develop new PES, and provides reference for guidance for current approved PES for interim changes, as determined necessary, to maintain interoperability with the USPS systems and processes.

Volume II—IMI Requirements. Provides the minimum required information, both human- and machine-readable, for all pre-paid evidence of postage produced by a PES. Also provides the reporting requirements for all supporting data systems used by USPS to manage the program.

Volume III—Test and Evaluation Requirements. Provides for laboratories certified by National Institute of Standards and Technology (NIST) to perform Federal Information Processing Standard (FIPS) 140–X testing, and provides PES testing entities with guidance on test and evaluation procedures that a PES system must undergo to receive USPS approval.

Volume IV—PES Test and Evaluation Program Requirements. Provides the Program and logistical processes that are required for a PES to obtain approval from USPS, as well as the requirements for the evaluation and submission of changes and updates to a previously approved PES.

Stanley F. Mires,

Attorney, Legal Policy & Legislative Advice.

[FR Doc. 2012–7359 Filed 3–29–12; 8:45 am]

BILLING CODE 7710–12–P

SECURITIES AND EXCHANGE COMMISSION

[Release No. 34–66658; File No. SR–EDGA–2012–11]

Self-Regulatory Organizations; EDGA Exchange, Inc.; Notice of Filing and Immediate Effectiveness of Proposed Rule Change Clarifying That Rule Change in Connection With Proposed Combination Between NYSE Euronext and Deutsche Börse AG Will Not Become Effective

March 26, 2012.

Pursuant to Section 19(b)(1) [1] of the Securities Exchange Act of 1934 (the ''Exchange Act'' or ''Act''),[2] and Rule 19b–4 thereunder,[3] notice is hereby given that on March 19, 2012, the EDGA Exchange, Inc. (the ''Exchange'' or ''EDGA'') filed with the Securities and

[1] 15 U.S.C. 78s(b)(1).

[2] 15 U.S.C. 78a.

[3] 17 CFR 240.19b–4.

Exchange Commission (the ''Commission'') the proposed rule change (the ''Proposed Rule Change'') as described in Items I and II below, which Items have been prepared by the Exchange. The Commission is publishing this notice to solicit comments on the Proposed Rule Change from interested persons.

I. Self-Regulatory Organization's Statement of the Terms of Substance of the Proposed Rule Change

The Exchange previously submitted a proposed rule change [4] (the ''Holdco Proposal'') in connection with the proposed business combination (the ''Combination'') of NYSE Euronext, a Delaware corporation, and Deutsche Börse AG, an *Aktiengesellschaft* organized under the laws of the Federal Republic of Germany (''Deutsche Börse''). The Holdco Proposal was conditionally approved by the Commission.[5] The Exchange is submitting this Proposed Rule Change in order to clarify that the Holdco Proposal will not become effective. The text of the Proposed Rule Change is available on the Exchange's Web site *www.directedge.com,* at the principal office of the Exchange, and at the Commission's Public Reference Room.

II. Self-Regulatory Organization's Statement of the Purpose of, and Statutory Basis for, the Proposed Rule Change

In its filing with the Commission, the Exchange has included statements concerning the purpose of, and basis for, the Proposed Rule Change. The text of these statements may be examined at the places specified in Item IV below. The Exchange has prepared summaries, set forth in Sections A, B and C below, of the most significant aspects of such statements.

A. Self-Regulatory Organization's Statement of the Purpose of, and Statutory Basis for, the Proposed Rule Change

1. Purpose

The Exchange proposes to clarify that the Combination contemplated by the Holdco Proposal will not be completed and, therefore, the Holdco Proposal conditionally approved by the Commission [6] will not become effective.

The Holdco Proposal was submitted to the Commission in connection with the Combination.[7] The purpose of the Holdco Proposal was to adopt the rules necessary to permit NYSE Euronext and Deutsche Börse to effect the Combination and to amend certain provisions of the organizational and other governance documents of Alpha Beta Netherlands Holding N.V., a holding company organized under the laws of the Netherlands (''Holdco''), and ISE Holdings, Inc.

The Commission's approval of the Holdco Proposal was conditioned on completion of the Combination, and the Commission noted that if the Combination is not consummated, the Holdco Proposal would not become effective.

On February 2, 2012, following the European Commission's decision to prohibit the Combination, NYSE Euronext and Deutsche Börse agreed to terminate the Business Combination Agreement, dated as of February 15, 2011, as amended by Amendment No. 1 dated as of May 2, 2011 and by Amendment No. 2 dated as of June 16, 2011, by and among NYSE Euronext, Deutsche Börse, Holdco and Pomme Merger Corporation, a Delaware corporation and newly formed wholly owned subsidiary of Holdco.

Accordingly, the Combination contemplated by the Holdco Proposal will not be completed and, therefore, the Holdco Proposal conditionally approved by the Commission will not become effective.

2. Statutory Basis

The Exchange believes that this filing is consistent with Section 6(b) [8] of the Securities Exchange Act of 1934 (the ''Exchange Act'') in general, and furthers the objectives of Section 6(b)(5) [9] in particular, in that it is designed to prevent fraudulent and manipulative acts and practices, to promote just and equitable principles of trade, to foster cooperation and coordination with persons engaged in facilitating transactions in securities, and to remove impediments to and perfect the mechanism of a free and open market and a national market system. Specifically, the Exchange believes that the Proposed Rule Change will clarify the corporate structure of the Exchange, which will promote just and equitable principles of trade and help to protect investors and the public interest.

B. Self-Regulatory Organization's Statement on Burden on Competition

The Exchange does not believe that the Proposed Rule Change will impose any burden on competition that is not necessary or appropriate in furtherance of the purposes of the Exchange Act.

C. Self-Regulatory Organization's Statement on Comments on the Proposed Rule Change Received From Members, Participants or Others

The Exchange has neither solicited nor received written comments on the Proposed Rule Change.

III. Date of Effectiveness of the Proposed Rule Change and Timing for Commission Action

Because the foregoing proposed rule change: (1) Does not significantly affect the protection of investors or the public interest; (2) does not impose any significant burden on competition; and (3) by its terms, does not become operative for 30 days after the date of this filing, or such shorter time as the Commission may designate if consistent with the protection of investors and the public interest, the proposed rule change has become effective pursuant to Section 19(b)(3)(A) of the Act [10] and Rule 19b–4(f)(6) thereunder.[11]

At any time within 60 days of the filing of the Proposed Rule Change, the Commission summarily may temporarily suspend such rule change if it appears to the Commission that such action is necessary or appropriate in the public interest, for the protection of investors, or otherwise in furtherance of the purposes of the Exchange Act.

IV. Solicitation of Comments

Interested persons are invited to submit written data, views, and arguments concerning the foregoing, including whether the proposed rule change is consistent with the Act. Comments may be submitted by any of the following methods:

Electronic Comments

- Use the Commission's Internet comment form (*http://www.sec.gov/rules/sro.shtml*); or
- Send an email to *rule-comments@sec.gov.* Please include File Number SR–EDGA–2012–11 on the subject line.

[4] *See* Securities Exchange Act Release No. 65564 (October 14, 2011), 76 FR 65264 (October 20, 2011) (SR–EDGA–2011–34).

[5] *See* Securities Exchange Act Release No. 66171 (January 17, 2012), 77 FR 3297 (January 23, 2012) (File Nos. SR–EDGA–2011–34; SR–EDGX–2011–33; SR–ISE–2011–69; SR–NYSE–2011–51; SR–NYSEAmex–2011–78; SR–NYSEArca–2011–72).

[6] *Id.*

[7] *See supra* note 4.

[8] 15 U.S.C. 78f(b).

[9] 15 U.S.C. 78f(b)(5).

[10] 15 U.S.C. 78s(b)(3)(A).

[11] 17 CFR 240.19b–4(f)(6). In addition, Rule 19b–4(f)(6)(iii) requires a self-regulatory organization to provide the Commission with written notice of its intent to file the proposed rule change, along with a brief description and text of the proposed rule change, at least five business days prior to the date of filing of the proposed rule change, or such shorter time as designated by the Commission. The Exchange has fulfilled this requirement.

Paper Comments

• Send paper comments in triplicate to Elizabeth M. Murphy, Secretary, Securities and Exchange Commission, 100 F Street NE., Washington, DC 20549–1090.

All submissions should refer to File Number SR–EDGA–2012–11. This file number should be included on the subject line if email is used. To help the Commission process and review your comments more efficiently, please use only one method. The Commission will post all comments on the Commission's Internet Web site (*http://www.sec.gov/rules/sro.shtml*). Copies of the submission, all subsequent amendments, all written statements with respect to the proposed rule change that are filed with the Commission, and all written communications relating to the proposed rule change between the Commission and any person, other than those that may be withheld from the public in accordance with the provisions of 5 U.S.C. 552, will be available for Web site viewing and printing in the Commission's Public Reference Room, 100 F Street NE., Washington, DC 20549, on official business days between the hours of 10 a.m. and 3 p.m. Copies of the filing also will be available for inspection and copying at the principal office of the Exchange. All comments received will be posted without change; the Commission does not edit personal identifying information from submissions. You should submit only information that you wish to make available publicly. All submissions should refer to File Number SR–EDGA–2012–11 and should be submitted on or before April 20, 2012.

For the Commission, by the Division of Trading and Markets, pursuant to delegated authority.[12]

Kevin M. O'Neill,

Deputy Secretary.

[FR Doc. 2012–7631 Filed 3–29–12; 8:45 am]

BILLING CODE 8011–01–P

[12] 17 CFR 200.30–3(a)(12).

SECURITIES AND EXCHANGE COMMISSION

[Release No. 34–66659; File No. SR–CME–2012–08]

Self-Regulatory Organizations; Chicago Mercantile Exchange, Inc.; Notice of Filing and Order Granting Accelerated Approval of Proposed Rule Change To Comply With Revisions to the Commodity Futures Trading Commission's Part 190 Regulations

March 26, 2012.

Pursuant to Section 19(b)(1) of the Securities Exchange Act of 1934 (''Act'')[1] and Rule 19b–4 thereunder,[2] notice is hereby given that on March 12, 2012, the Chicago Mercantile Exchange Inc. (''CME'') filed with the Securities and Exchange Commission (''Commission'') the proposed rule change described in Items I and II below, which items have been prepared primarily by CME. The Commission is publishing this Notice and Order to solicit comments on the proposed rule change from interested persons and to approve the proposed rule change on an accelerated basis.

I. Self-Regulatory Organization's Statement of Terms of Substance of the Proposed Rule Change

CME proposes to amend certain of its rules to comply with pending revisions to the Commodity Futures Trading Commission's (''CFTC'') Part 190 Regulations.

II. Self-Regulatory Organization's Statement of Purpose of, and Statutory Basis for, the Proposed Rule Change

In its filing with the Commission, CME included statements concerning the purpose and basis for the proposed rule change and discussed any comments it received on the proposed rule change. The text of these statements may be examined at the places specified in Item III below. CME has prepared summaries, set forth in sections A, B, and C below, of the most significant aspects of such statements.[3]

A. Self-Regulatory Organization's Statement of Purpose of, and Statutory Basis for, the Proposed Rule Change

CME is registered as a derivatives clearing organization (''DCO'') with the CFTC and operates a substantial business clearing futures and swaps contracts subject to the jurisdiction of the CFTC. CME is also registered as a clearing agency with the Commission. CME proposes to amend certain of its rules to comply with pending amendments to the CFTC's Part 190 Bankruptcy Regulations that will become effective on April 9, 2012.

The Part 190 amendments were made in connection with the CFTC's final rules for customer swaps segregation. Those revisions include creating a ''cleared swap'' customer account class for purposes of futures commission merchant and DCO bankruptcies and replacing the defined term ''cleared OTC derivatives,'' which is incorporated by reference into several CME rules, with the new defined term ''cleared swaps.'' In order to reflect the removal of the defined term ''cleared OTC derivatives'' from Part 190, CME will amend CME Rules 930.N, 8F100, and 8F122 and CME definitions of ''Cleared OTC Derivatives Customers'' and ''Funds of Cleared OTC Derivatives Customers.'' The amendments comport with CFTC DCO Core Principle C (Participant and Product Eligibility) and Core Principle F (Treatment of Funds).

The text of the CME's proposed rule amendments was attached as Exhibit 5 to this proposed rule change filing, which filing can be viewed at the CME Web site at *http://www.cmegroup.com/market-regulation/files/SEC_19b-4_x12–08x.pdf.* CME also made a filing, CME Submission 12–066, with its primary regulator, the CFTC, with respect to this proposed rule change.

CME believes the proposed changes are consistent with the requirements of the Act and the rules and regulations issued thereunder. CME, a DCO, is required to implement the proposed changes to comply with recent changes to CFTC regulations. CME notes that the policies of the Commodity Exchange Act with respect to clearing are comparable to a number of the policies underlying the Act, such as promoting market transparency for derivatives markets, promoting the prompt and accurate clearance and settlement of transactions, and protecting investors and the public interest.

B. Self-Regulatory Organization's Statement on Burden on Competition

CME does not believe that the proposed rule change will have any impact, or impose any burden, on competition.

C. Self-Regulatory Organization's Statement on Comments on the Proposed Rule Change Received From Members, Participants, or Others

CME has not solicited, and does not intend to solicit, comments regarding

[1] 15 U.S.C. 78s(b)(1).

[2] 17 CFR 240.19b–4.

[3] The Commission has modified the text of the summaries prepared by CME.

this proposed rule change. CME has not received any unsolicited written comments from interested parties.

III. Solicitation of Comments

Interested persons are invited to submit written data, views and arguments concerning the foregoing, including whether the proposed rule change is consistent with the Act. Comments may be submitted by any of the following methods:

- Electronic comments may be submitted by using the Commission's Internet comment form (*http://www.sec.gov/rules/sro.shtml*), or send an email to *rule-comments@sec.gov.* Please include File No. SR–CME–2012–08 on the subject line.
- Paper comments should be sent in triplicate to Elizabeth M. Murphy, Secretary, Securities and Exchange Commission, 100 F Street NE., Washington, DC, 20549–1090.

All submissions should refer to File Number SR–CME–2012–08. This file number should be included on the subject line if email is used. To help the Commission process and review your comments more efficiently, please use only one method. The Commission will post all comments on the Commission's Internet Web site (*http://www.sec.gov/rules/sro.shtml*). Copies of the submission, all subsequent amendments, all written statements with respect to the proposed rule change that are filed with the Commission, and all written communications relating to the proposed rule change between the Commission and any person, other than those that may be withheld from the public in accordance with the provisions of 5 U.S.C. 552, will be available for Web site viewing and printing in the Commission's Public Reference Room, 100 F Street NE., Washington, DC 20549 on official business days between the hours of 10 a.m. and 3 p.m. Copies of such filing also will be available for inspection and copying at the principal office of CME. All comments received will be posted without change; the Commission does not edit personal identifying information from submissions. You should submit only information that you wish to make available publicly. All submissions should refer to File Number SR–CME–2012–08 and should be submitted on or before April 20, 2012.

IV. Commission's Findings and Order Granting Accelerated Approval of Proposed Rule Change

In its filing, CME requested that the Commission approve this request on an accelerated basis for good cause shown. CME believes there is good cause to approve this filing on an accelerated basis because the proposed changes are required to comply with new CFTC regulations that will become effective on April 9, 2012.

Section 19(b) of the Act [4] directs the Commission to approve a proposed rule change of a self-regulatory organization if it finds that such proposed rule change is consistent with the requirements of the Act and the rules and regulations thereunder applicable to such organization. The Commission finds that the proposed rule changes are consistent with the requirements of the Act, in particular the requirements of Section 17A of the Act,[5] and the rules and regulations thereunder applicable to CME. Specifically, the Commission finds that the proposed rule change is consistent with Section 17A(b)(3)(F) of the Act which requires, among other things, that the rules of a clearing agency be designed to assure the safeguarding of securities and funds which are in the custody and control of the clearing agency because it will allow CME to comply with the Part 190 amendments made in connection with the CFTC's final rules for customer swaps segregation.[6]

The Commission finds good cause, pursuant to Section 19(b)(2) of the Act,[7] for approving the proposed rule change prior to the 30th day after the date of publication of notice in the **Federal Register** because the proposed rule change institutes the regulations of another regulatory agency, and those regulations were subject to notice and comment.

V. Conclusion

It is therefore ordered, pursuant to Section 19(b)(2) of the Act, that the proposed rule change (SR–CME–2012–08) is approved on an accelerated basis.

For the Commission by the Division of Trading and Markets, pursuant to delegated authority.[8]

Kevin O'Neill,

Deputy Secretary.

[FR Doc. 2012–7707 Filed 3–29–12; 8:45 am]

BILLING CODE 8011–01–P

[4] 15 U.S.C. 78s(b).

[5] 15 U.S.C. 78q–1. In approving this proposed rule change, the Commission has considered the proposed rule's impact on efficiency, competition, and capital formation. 15 U.S.C. 78c(f).

[6] 15 U.S.C. 78q–1(b)(3)(F).

[7] 15 U.S.C. 78s(b)(2).

[8] 17 CFR 200.30–3(a)(12).

SECURITIES AND EXCHANGE COMMISSION

[Release No. 34–66663; File No. SR–NYSEAmex–2012–19]

Self-Regulatory Organizations; NYSE Amex LLC; Notice of Filing and Immediate Effectiveness of Proposed Rule Change Clarifying That Rule Change in Connection With Proposed Combination Between NYSE Euronext and Deutsche Börse AG Will Not Become Effective

March 26, 2012.

Pursuant to Section 19(b)(1) [1] of the Securities Exchange Act of 1934 (the ''Exchange Act'' or ''Act''),[2] and Rule 19b–4 thereunder,[3] notice is hereby given that on March 16, 2012, NYSE Amex LLC (the ''Exchange'') filed with the Securities and Exchange Commission (the ''Commission'') the proposed rule change (the ''Proposed Rule Change'') as described in Items I and II below, which Items have been prepared by the Exchange. The Commission is publishing this notice to solicit comments on the Proposed Rule Change from interested persons.

I. Self-Regulatory Organization's Statement of the Terms of Substance of the Proposed Rule Change

The Exchange previously submitted a proposed rule change[4] (the ''Holdco Proposal'') in connection with the proposed business combination (the ''Combination'') of NYSE Euronext, a Delaware corporation, and Deutsche Börse AG, an *Aktiengesellschaft* organized under the laws of the Federal Republic of Germany (''Deutsche Börse''). The Holdco Proposal was conditionally approved by the Commission.[5] The Exchange is submitting this Proposed Rule Change in order to clarify that the Holdco Proposal will not become effective. The text of the Proposed Rule Change is available at the Exchange, *www.nyse.com,* and the Commission's Public Reference Room.

[1] 15 U.S.C. 78s(b)(1).

[2] 15 U.S.C. 78a.

[3] 17 CFR 240.19b–4.

[4] *See* Securities Exchange Act Release No. 65563 (October 14, 2011), 76 FR 65272 (October 20, 2011) (SR–NYSEAmex–2011–78).

[5] *See* Securities Exchange Act Release No. 66171 (January 17, 2012), 77 FR 3297 (January 23, 2012) (File Nos. SR–EDGA–2011–34; SR–EDGX–2011–33; SR–ISE–2011–69; SR–NYSE–2011–51; SR–NYSE Amex–2011–78; SR–NYSEArca–2011–72).

II. Self-Regulatory Organization's Statement of the Purpose of, and Statutory Basis for, the Proposed Rule Change

In its filing with the Commission, the Exchange included statements concerning the purpose of, and basis for, the proposed rule change and discussed any comments it received on the proposed rule change. The text of those statements may be examined at the places specified in Item IV below. The Exchange has prepared summaries, set forth in sections A, B, and C below, of the most significant parts of such statements.

A. Self-Regulatory Organization's Statement of the Purpose of, and Statutory Basis for, the Proposed Rule Change

1. Purpose

The Exchange proposes to clarify that the Combination contemplated by the Holdco Proposal will not be completed and, therefore, the Holdco Proposal conditionally approved by the Commission[6] will not become effective.

The Holdco Proposal was submitted to the Commission in connection with the Combination.[7] The purpose of the Holdco Proposal was to adopt the rules necessary to permit NYSE Euronext and Deutsche Börse to effect the Combination and to amend certain provisions of the organizational and other governance documents of Alpha Beta Netherlands Holding N.V., a holding company organized under the laws of the Netherlands (''Holdco''), the Exchange, NYSE Group, Inc. and certain other subsidiaries of NYSE Euronext as well as certain rules of the Exchange, New York Stock Exchange LLC and NYSE Arca Equities, Inc.

The Commission's approval of the Holdco Proposal was conditioned on completion of the Combination, and the Commission noted that if the Combination is not consummated, the Holdco Proposal would not become effective.

On February 2, 2012, following the European Commission's decision to prohibit the Combination, NYSE Euronext and Deutsche Börse agreed to terminate the Business Combination Agreement, dated as of February 15, 2011, as amended by Amendment No. 1 dated as of May 2, 2011 and by Amendment No. 2 dated as of June 16, 2011, by and among NYSE Euronext, Deutsche Börse, Holdco and Pomme Merger Corporation, a Delaware corporation and newly formed wholly owned subsidiary of Holdco.

Accordingly, the Combination contemplated by the Holdco Proposal will not be completed and, therefore, the Holdco Proposal conditionally approved by the Commission will not become effective.

2. Statutory Basis

The Exchange believes that this filing is consistent with Section 6(b)[8] of the Securities Exchange Act of 1934 (the ''Exchange Act'') in general, and furthers the objectives of Section 6(b)(5)[9] in particular, in that it is designed to prevent fraudulent and manipulative acts and practices, to promote just and equitable principles of trade, to foster cooperation and coordination with persons engaged in facilitating transactions in securities, and to remove impediments to and perfect the mechanism of a free and open market and a national market system. Specifically, the Exchange believes that the Proposed Rule Change will clarify the corporate structure of the Exchange, which will promote just and equitable principles of trade and help to protect investors and the public interest.

B. Self-Regulatory Organization's Statement on Burden on Competition

The Exchange does not believe that the Proposed Rule Change will impose any burden on competition that is not necessary or appropriate in furtherance of the purposes of the Exchange Act.

C. Self-Regulatory Organization's Statement on Comments on the Proposed Rule Change Received From Members, Participants or Others

The Exchange has neither solicited nor received written comments on the Proposed Rule Change.

III. Date of Effectiveness of the Proposed Rule Change and Timing for Commission Action

Because the foregoing proposed rule change: (1) Does not significantly affect the protection of investors or the public interest; (2) does not impose any significant burden on competition; and (3) by its terms, does not become operative for 30 days after the date of this filing, or such shorter time as the Commission may designate if consistent with the protection of investors and the public interest, the proposed rule change has become effective pursuant to Section 19(b)(3)(A) of the Act[10] and Rule 19b–4(f)(6) thereunder.[11]

At any time within 60 days of the filing of the Proposed Rule Change, the Commission summarily may temporarily suspend such rule change if it appears to the Commission that such action is necessary or appropriate in the public interest, for the protection of investors, or otherwise in furtherance of the purposes of the Exchange Act.

IV. Solicitation of Comments

Interested persons are invited to submit written data, views, and arguments concerning the foregoing, including whether the proposed rule change is consistent with the Act. Comments may be submitted by any of the following methods:

Electronic Comments

- Use the Commission's Internet comment form (*http://www.sec.gov/rules/sro.shtml*); or
- Send an email to *rule-comments@sec.gov.* Please include File Number SR–NYSEAmex–2012–19 on the subject line.

Paper Comments

- Send paper comments in triplicate to Elizabeth M. Murphy, Secretary, Securities and Exchange Commission, 100 F Street NE., Washington, DC 20549–1090.

All submissions should refer to File Number SR–NYSEAmex–2012–19. This file number should be included on the subject line if email is used. To help the Commission process and review your comments more efficiently, please use only one method. The Commission will post all comments on the Commission's Internet Web site (*http://www.sec.gov/rules/sro.shtml*). Copies of the submission, all subsequent amendments, all written statements with respect to the proposed rule change that are filed with the Commission, and all written communications relating to the proposed rule change between the Commission and any person, other than those that may be withheld from the public in accordance with the provisions of 5 U.S.C. 552, will be available for Web site viewing and printing in the Commission's Public Reference Room, 100 F Street NE.,

[6] *Id.*

[7] *See supra* note 4.

[8] 15 U.S.C. 78f(b).

[9] 15 U.S.C. 78f(b)(5).

[10] 15 U.S.C. 78s(b)(3)(A).

[11] 17 CFR 240.19b–4(f)(6). In addition, Rule 19b–4(f)(6)(iii) requires a self-regulatory organization to provide the Commission with written notice of its intent to file the proposed rule change, along with a brief description and text of the proposed rule change, at least five business days prior to the date of filing of the proposed rule change, or such shorter time as designated by the Commission. The Exchange has fulfilled this requirement.

Washington, DC 20549, on official business days between the hours of 10 a.m. and 3 p.m. Copies of the filing also will be available for inspection and copying at the principal office of the Exchange. All comments received will be posted without change; the Commission does not edit personal identifying information from submissions. You should submit only information that you wish to make available publicly. All submissions should refer to File Number SR–NYSEAmex–2012–19 and should be submitted on or before April 20, 2012.

For the Commission, by the Division of Trading and Markets, pursuant to delegated authority.[12]

Kevin M. O'Neill,

Deputy Secretary.

[FR Doc. 2012–7635 Filed 3–29–12; 8:45 am]

BILLING CODE 8011–01–P

SECURITIES AND EXCHANGE COMMISSION

[Release No. 34–66662; File No. SR–NYSE–2012–08]

Self-Regulatory Organizations; New York Stock Exchange LLC; Notice of Filing and Immediate Effectiveness of Proposed Rule Change Clarifying That Rule Change in Connection With Proposed Combination Between NYSE Euronext and Deutsche Börse AG Will Not Become Effective

March 26, 2012.

Pursuant to Section 19(b)(1)[1] of the Securities Exchange Act of 1934 (the ''Exchange Act'' or ''Act''),[2] and Rule 19b–4 thereunder,[3] notice is hereby given that on March 16, 2012, the New York Stock Exchange LLC (the ''Exchange'') filed with the Securities and Exchange Commission (the ''Commission'') the proposed rule change (the ''Proposed Rule Change'') as described in Items I and II below, which Items have been prepared by the Exchange. The Commission is publishing this notice to solicit comments on the Proposed Rule Change from interested persons.

I. Self-Regulatory Organization's Statement of the Terms of Substance of the Proposed Rule Change

The Exchange previously submitted a proposed rule change[4] (the ''Holdco Proposal'') in connection with the proposed business combination (the ''Combination'') of NYSE Euronext, a Delaware corporation, and Deutsche Börse AG, an *Aktiengesellschaft* organized under the laws of the Federal Republic of Germany (''Deutsche Börse''). The Holdco Proposal was conditionally approved by the Commission.[5] The Exchange is submitting this Proposed Rule Change in order to clarify that the Holdco Proposal will not become effective. The text of the Proposed Rule Change is available at the Exchange, *www.nyse.com,* and the Commission's Public Reference Room.

II. Self-Regulatory Organization's Statement of the Purpose of, and Statutory Basis for, the Proposed Rule Change

In its filing with the Commission, the Exchange included statements concerning the purpose of, and basis for, the proposed rule change and discussed any comments it received on the proposed rule change. The text of those statements may be examined at the places specified in Item IV below. The Exchange has prepared summaries, set forth in sections A, B and C below, of the most significant parts of such statements.

A. Self-Regulatory Organization's Statement of the Purpose of, and Statutory Basis for, the Proposed Rule Change

1. Purpose

The Exchange proposes to clarify that the Combination contemplated by the Holdco Proposal will not be completed and, therefore, the Holdco Proposal conditionally approved by the Commission[6] will not become effective.

The Holdco Proposal was submitted to the Commission in connection with the Combination.[7] The purpose of the Holdco Proposal was to adopt the rules necessary to permit NYSE Euronext and Deutsche Börse to effect the Combination and to amend certain provisions of the organizational and other governance documents of Alpha Beta Netherlands Holding N.V., a holding company organized under the laws of the Netherlands (''Holdco''), the Exchange, NYSE Group, Inc. and certain other subsidiaries of NYSE Euronext as well as certain rules of the Exchange, NYSE Amex LLC and NYSE Arca Equities, Inc.

The Commission's approval of the Holdco Proposal was conditioned on completion of the Combination, and the Commission noted that if the Combination is not consummated, the Holdco Proposal would not become effective.

On February 2, 2012, following the European Commission's decision to prohibit the Combination, NYSE Euronext and Deutsche Börse agreed to terminate the Business Combination Agreement, dated as of February 15, 2011, as amended by Amendment No. 1 dated as of May 2, 2011 and by Amendment No. 2 dated as of June 16, 2011, by and among NYSE Euronext, Deutsche Börse, Holdco and Pomme Merger Corporation, a Delaware corporation and newly formed wholly owned subsidiary of Holdco.

Accordingly, the Combination contemplated by the Holdco Proposal will not be completed and, therefore, the Holdco Proposal conditionally approved by the Commission will not become effective.

2. Statutory Basis

The Exchange believes that this filing is consistent with Section 6(b)[8] of the Securities Exchange Act of 1934 (the ''Exchange Act'') in general, and furthers the objectives of Section 6(b)(5)[9] in particular, in that it is designed to prevent fraudulent and manipulative acts and practices, to promote just and equitable principles of trade, to foster cooperation and coordination with persons engaged in facilitating transactions in securities, and to remove impediments to and perfect the mechanism of a free and open market and a national market system. Specifically, the Exchange believes that the Proposed Rule Change will clarify the corporate structure of the Exchange, which will promote just and equitable principles of trade and help to protect investors and the public interest.

B. Self-Regulatory Organization's Statement on Burden on Competition

The Exchange does not believe that the Proposed Rule Change will impose any burden on competition that is not necessary or appropriate in furtherance of the purposes of the Exchange Act.

---

[12] 17 CFR 200.30–3(a)(12).

[1] 15 U.S.C. 78s(b)(1).

[2] 15 U.S.C. 78a.

[3] 17 CFR 240.19b–4.

[4] *See* Securities Exchange Act Release No. 65562 (October 14, 2011), 76 FR 65288 (October 20, 2011) (SR–NYSE–2011–51).

[5] *See* Securities Exchange Act Release No. 66171 (January 17, 2012), 77 FR 3297 (January 23, 2012) (File Nos. SR–EDGA–2011–34; SR–EDGX–2011–33; SR–ISE–2011–69; SR–NYSE–2011–51; SR–NYSEAmex–2011–78; SR–NYSEArca–2011–72).

[6] *Id.*

[7] *See supra* note 4.

[8] 15 U.S.C. 78f(b).

[9] 15 U.S.C. 78f(b)(5).

C. Self-Regulatory Organization's Statement on Comments on the Proposed Rule Change Received From Members, Participants or Others

The Exchange has neither solicited nor received written comments on the Proposed Rule Change.

III. Date of Effectiveness of the Proposed Rule Change and Timing for Commission Action

Because the foregoing proposed rule change: (1) Does not significantly affect the protection of investors or the public interest; (2) does not impose any significant burden on competition; and (3) by its terms, does not become operative for 30 days after the date of this filing, or such shorter time as the Commission may designate if consistent with the protection of investors and the public interest, the proposed rule change has become effective pursuant to Section 19(b)(3)(A) of the Act [10] and Rule 19b–4(f)(6) thereunder.[11]

At any time within 60 days of the filing of the Proposed Rule Change, the Commission summarily may temporarily suspend such rule change if it appears to the Commission that such action is necessary or appropriate in the public interest, for the protection of investors, or otherwise in furtherance of the purposes of the Exchange Act.

IV. Solicitation of Comments

Interested persons are invited to submit written data, views, and arguments concerning the foregoing, including whether the proposed rule change is consistent with the Act. Comments may be submitted by any of the following methods:

Electronic Comments

- Use the Commission's Internet comment form (*http://www.sec.gov/rules/sro.shtml*); or
- Send an email to *rule-comments@sec.gov.* Please include File Number SR–NYSE–2012–08 on the subject line.

Paper Comments

- Send paper comments in triplicate to Elizabeth M. Murphy, Secretary, Securities and Exchange Commission, 100 F Street NE., Washington, DC 20549–1090.

All submissions should refer to File Number SR–NYSE–2012–08. This file number should be included on the subject line if email is used. To help the Commission process and review your comments more efficiently, please use only one method. The Commission will post all comments on the Commission's Internet Web site (*http://www.sec.gov/rules/sro.shtml*). Copies of the submission, all subsequent amendments, all written statements with respect to the proposed rule change that are filed with the Commission, and all written communications relating to the proposed rule change between the Commission and any person, other than those that may be withheld from the public in accordance with the provisions of 5 U.S.C. 552, will be available for Web site viewing and printing in the Commission's Public Reference Room, 100 F Street NE., Washington, DC 20549, on official business days between the hours of 10 a.m. and 3 p.m. Copies of the filing also will be available for inspection and copying at the principal office of the Exchange. All comments received will be posted without change; the Commission does not edit personal identifying information from submissions. You should submit only information that you wish to make available publicly. All submissions should refer to File Number SR–NYSE–2012–08 and should be submitted on or before April 20, 2012.

For the Commission, by the Division of Trading and Markets, pursuant to delegated authority.[12]

Kevin M. O'Neill,

Deputy Secretary.

[FR Doc. 2012–7634 Filed 3–29–12; 8:45 am]

BILLING CODE 8011–01–P

[10] 15 U.S.C. 78s(b)(3)(A).

[11] 17 CFR 240.19b–4(f)(6). In addition, Rule 19b–4(f)(6)(iii) requires a self-regulatory organization to provide the Commission with written notice of its intent to file the proposed rule change, along with a brief description and text of the proposed rule change, at least five business days prior to the date of filing of the proposed rule change, or such shorter time as designated by the Commission. The Exchange has fulfilled this requirement.

[12] 17 CFR 200.30–3(a)(12).

SECURITIES AND EXCHANGE COMMISSION

[Release No. 34–66661; File No. SR–NYSEArca–2012–23]

Self-Regulatory Organizations; NYSE Arca, Inc.; Notice of Filing and Immediate Effectiveness of Proposed Rule Change Clarifying That Rule Change in Connection With Proposed Combination Between NYSE Euronext and Deutsche Börse AG Will Not Become Effective

March 26, 2012.

Pursuant to Section 19(b)(1) [1] of the Securities Exchange Act of 1934 (the ''Exchange Act'' or ''Act''),[2] and Rule 19b–4 thereunder,[3] notice is hereby given that on March 16, 2012, NYSE Arca, Inc. (the ''Exchange'') filed with the Securities and Exchange Commission (the ''Commission'') the proposed rule change (the ''Proposed Rule Change'') as described in Items I and II below, which Items have been prepared by the Exchange. The Commission is publishing this notice to solicit comments on the Proposed Rule Change from interested persons.

I. Self-Regulatory Organization's Statement of the Terms of Substance of the Proposed Rule Change

The Exchange previously submitted a proposed rule change [4] (the ''Holdco Proposal'') in connection with the proposed business combination (the ''Combination'') of NYSE Euronext, a Delaware corporation, and Deutsche Börse AG, an *Aktiengesellschaft* organized under the laws of the Federal Republic of Germany (''Deutsche Börse''). The Holdco Proposal was conditionally approved by the Commission.[5] The Exchange is submitting this Proposed Rule Change in order to clarify that the Holdco Proposal will not become effective. The text of the Proposed Rule Change is available at the Exchange, *www.nyse.com,* and the Commission's Public Reference Room.

II. Self-Regulatory Organization's Statement of the Purpose of, and Statutory Basis for, the Proposed Rule Change

In its filing with the Commission, the Exchange included statements concerning the purpose of, and basis for, the proposed rule change and discussed any comments it received on the proposed rule change. The text of those statements may be examined at the places specified in Item IV below. The Exchange has prepared summaries, set forth in sections A, B and C below, of the most significant parts of such statements.

[1] 15 U.S.C. 78s(b)(1).

[2] 15 U.S.C. 78a.

[3] 17 CFR 240.19b–4.

[4] *See* Securities Exchange Act Release No. 65567 (October 14, 2011), 76 FR 65230 (October 20, 2011) (SR–NYSEArca–2011–72).

[5] *See* Securities Exchange Act Release No. 66171 (January 17, 2012), 77 FR 3297 (January 23, 2012) (File Nos. SR–EDGA–2011–34; SR–EDGX–2011–33; SR–ISE–2011–69; SR–NYSE–2011–51; SR–NYSEAmex–2011–78; SR–NYSEArca–2011–72).

A. Self-Regulatory Organization's Statement of the Purpose of, and Statutory Basis for, the Proposed Rule Change

1. Purpose

The Exchange proposes to clarify that the Combination contemplated by the Holdco Proposal will not be completed and, therefore, the Holdco Proposal conditionally approved by the Commission[6] will not become effective.

The Holdco Proposal was submitted to the Commission in connection with the Combination.[7] The purpose of the Holdco Proposal was to adopt the rules necessary to permit NYSE Euronext and Deutsche Börse to effect the Combination and to amend certain provisions of the organizational and other governance documents of Alpha Beta Netherlands Holding N.V., a holding company organized under the laws of the Netherlands (''Holdco''), NYSE Group, Inc. and certain other subsidiaries of NYSE Euronext as well as certain rules of the New York Stock Exchange LLC, NYSE Amex LLC and NYSE Arca Equities, Inc.

The Commission's approval of the Holdco Proposal was conditioned on completion of the Combination, and the Commission noted that if the Combination is not consummated, the Holdco Proposal would not become effective.

On February 2, 2012, following the European Commission's decision to prohibit the Combination, NYSE Euronext and Deutsche Börse agreed to terminate the Business Combination Agreement, dated as of February 15, 2011, as amended by Amendment No. 1 dated as of May 2, 2011 and by Amendment No. 2 dated as of June 16, 2011, by and among NYSE Euronext, Deutsche Börse, Holdco and Pomme Merger Corporation, a Delaware corporation and newly formed wholly owned subsidiary of Holdco.

Accordingly, the Combination contemplated by the Holdco Proposal will not be completed and, therefore, the Holdco Proposal conditionally approved by the Commission will not become operative.

2. Statutory Basis

The Exchange believes that this filing is consistent with Section 6(b)[8] of the Securities Exchange Act of 1934 (the ''Exchange Act'') in general, and furthers the objectives of Section 6(b)(5)[9] in particular, in that it is designed to prevent fraudulent and manipulative acts and practices, to promote just and equitable principles of trade, to foster cooperation and coordination with persons engaged in facilitating transactions in securities, and to remove impediments to and perfect the mechanism of a free and open market and a national market system. Specifically, the Exchange believes that the Proposed Rule Change will clarify the corporate structure of the Exchange, which will promote just and equitable principles of trade and help to protect investors and the public interest.

B. Self-Regulatory Organization's Statement on Burden on Competition

The Exchange does not believe that the Proposed Rule Change will impose any burden on competition that is not necessary or appropriate in furtherance of the purposes of the Exchange Act.

C. Self-Regulatory Organization's Statement on Comments on the Proposed Rule Change Received From Members, Participants or Others

The Exchange has neither solicited nor received written comments on the Proposed Rule Change.

III. Date of Effectiveness of the Proposed Rule Change and Timing for Commission Action

Because the foregoing proposed rule change: (1) Does not significantly affect the protection of investors or the public interest; (2) does not impose any significant burden on competition; and (3) by its terms, does not become operative for 30 days after the date of this filing, or such shorter time as the Commission may designate if consistent with the protection of investors and the public interest, the proposed rule change has become effective pursuant to Section 19(b)(3)(A) of the Act[10] and Rule 19b–4(f)(6) thereunder.[11]

At any time within 60 days of the filing of the Proposed Rule Change, the Commission summarily may temporarily suspend such rule change if it appears to the Commission that such action is necessary or appropriate in the public interest, for the protection of investors, or otherwise in furtherance of the purposes of the Exchange Act.

IV. Solicitation of Comments

Interested persons are invited to submit written data, views, and arguments concerning the foregoing, including whether the proposed rule change is consistent with the Act. Comments may be submitted by any of the following methods:

Electronic Comments

- Use the Commission's Internet comment form (*http://www.sec.gov/rules/sro.shtml*); or
- Send an email to *rule-comments@sec.gov*. Please include File Number SR–NYSEArca–2012–23 on the subject line.

Paper Comments

- Send paper comments in triplicate to Elizabeth M. Murphy, Secretary, Securities and Exchange Commission, 100 F Street NE., Washington, DC 20549–1090.

All submissions should refer to File Number SR–NYSEArca–2012–23. This file number should be included on the subject line if email is used. To help the Commission process and review your comments more efficiently, please use only one method. The Commission will post all comments on the Commission's Internet Web site (*http://www.sec.gov/rules/sro.shtml*). Copies of the submission, all subsequent amendments, all written statements with respect to the proposed rule change that are filed with the Commission, and all written communications relating to the proposed rule change between the Commission and any person, other than those that may be withheld from the public in accordance with the provisions of 5 U.S.C. 552, will be available for Web site viewing and printing in the Commission's Public Reference Room, 100 F Street NE., Washington, DC 20549, on official business days between the hours of 10 a.m. and 3 p.m. Copies of the filing also will be available for inspection and copying at the principal office of the Exchange. All comments received will be posted without change; the Commission does not edit personal identifying information from submissions. You should submit only information that you wish to make available publicly. All submissions should refer to File Number SR–NYSEArca–2012–23 and should be submitted on or before April 20, 2012.

[6] *Id.*

[7] *See supra* note 4.

[8] 15 U.S.C. 78f(b).

[9] 15 U.S.C. 78f(b)(5).

[10] 15 U.S.C. 78s(b)(3)(A).

[11] 17 CFR 240.19b–4(f)(6). In addition, Rule 19b–4(f)(6)(iii) requires a self-regulatory organization to provide the Commission with written notice of its intent to file the proposed rule change, along with a brief description and text of the proposed rule change, at least five business days prior to the date of filing of the proposed rule change, or such shorter time as designated by the Commission. The Exchange has fulfilled this requirement.

For the Commission, by the Division of Trading and Markets, pursuant to delegated authority.[12]

Kevin M. O'Neill,

Deputy Secretary.

[FR Doc. 2012–7633 Filed 3–29–12; 8:45 am]

BILLING CODE 8011–01–P

SECURITIES AND EXCHANGE COMMISSION

[Release No. 34–66660; File No. SR–ISE–2012–24]

Self-Regulatory Organizations; International Securities Exchange, LLC; Notice of Filing and Immediate Effectiveness of Proposed Rule Change Clarifying That Rule Change in Connection With Proposed Combination Between NYSE Euronext and Deutsche Börse AG Will Not Become Effective

March 26, 2012.

Pursuant to Section 19(b)(1)[1] of the Securities Exchange Act of 1934 (the ''Exchange Act'' or ''Act''),[2] and Rule 19b–4 thereunder,[3] notice is hereby given that on March 22, 2012, International Securities Exchange, LLC (the ''Exchange'' or ''ISE'') filed with the Securities and Exchange Commission (the ''Commission'') the proposed rule change (the ''Proposed Rule Change'') as described in Items I and II below, which Items have been prepared by the Exchange. The Commission is publishing this notice to solicit comments on the Proposed Rule Change from interested persons.

I. Self-Regulatory Organization's Statement of the Terms of Substance of the Proposed Rule Change

The Exchange previously submitted a proposed rule change[4] (the ''Holdco Proposal'') in connection with the proposed business combination (the ''Combination'') of NYSE Euronext, a Delaware corporation, and Deutsche Börse AG, an *Aktiengesellschaft* organized under the laws of the Federal Republic of Germany (''Deutsche Börse''). The Holdco Proposal was conditionally approved by the Commission.[5] The Exchange is submitting this Proposed Rule Change in order to clarify that the Holdco Proposal will not become effective. The text of the Proposed Rule Change is available on the Exchange's Web site *www.ise.com,* at the principal office of the Exchange, and at the Commission's Public Reference Room.

II. Self-Regulatory Organization's Statement of the Purpose of, and Statutory Basis for, the Proposed Rule Change

In its filing with the Commission, the Exchange has included statements concerning the purpose of, and basis for, the Proposed Rule Change. The text of these statements may be examined at the places specified in Item IV below. The Exchange has prepared summaries, set forth in Sections A, B and C below, of the most significant aspects of such statements.

A. Self-Regulatory Organization's Statement of the Purpose of, and Statutory Basis for, the Proposed Rule Change

1. Purpose

The Exchange proposes to clarify that the Combination contemplated by the Holdco Proposal will not be completed and, therefore, the Holdco Proposal conditionally approved by the Commission[6] will not become effective.

The Holdco Proposal was submitted to the Commission in connection with the Combination.[7] The purpose of the Holdco Proposal was to adopt the rules necessary to permit NYSE Euronext and Deutsche Börse to effect the Combination and to amend certain provisions of the organizational and other governance documents of Alpha Beta Netherlands Holding N.V., a holding company organized under the laws of the Netherlands (''Holdco''), and ISE Holdings, Inc.

The Commission's approval of the Holdco Proposal was conditioned on completion of the Combination, and the Commission noted that if the Combination is not consummated, the Holdco Proposal would not become effective.

On February 2, 2012, following the European Commission's decision to prohibit the Combination, NYSE Euronext and Deutsche Börse agreed to terminate the Business Combination Agreement, dated as of February 15, 2011, as amended by Amendment No. 1 dated as of May 2, 2011 and by Amendment No. 2 dated as of June 16, 2011, by and among NYSE Euronext, Deutsche Börse, Holdco and Pomme Merger Corporation, a Delaware corporation and newly formed wholly owned subsidiary of Holdco.

Accordingly, the Combination contemplated by the Holdco Proposal will not be completed and, therefore, the Holdco Proposal conditionally approved by the Commission will not become effective.

2. Statutory Basis

The Exchange believes that this filing is consistent with Section 6(b)[8] of the Securities Exchange Act of 1934 (the ''Exchange Act'') in general, and furthers the objectives of Section 6(b)(5)[9] in particular, in that it is designed to prevent fraudulent and manipulative acts and practices, to promote just and equitable principles of trade, to foster cooperation and coordination with persons engaged in facilitating transactions in securities, and to remove impediments to and perfect the mechanism of a free and open market and a national market system. Specifically, the Exchange believes that the Proposed Rule Change will clarify the corporate structure of the Exchange, which will promote just and equitable principles of trade and help to protect investors and the public interest.

B. Self-Regulatory Organization's Statement on Burden on Competition

The Exchange does not believe that the Proposed Rule Change will impose any burden on competition that is not necessary or appropriate in furtherance of the purposes of the Exchange Act.

C. Self-Regulatory Organization's Statement on Comments on the Proposed Rule Change Received From Members, Participants or Others

The Exchange has neither solicited nor received written comments on the Proposed Rule Change.

III. Date of Effectiveness of the Proposed Rule Change and Timing for Commission Action

Because the foregoing proposed rule change: (1) Does not significantly affect the protection of investors or the public interest; (2) does not impose any significant burden on competition; and (3) by its terms, does not become operative for 30 days after the date of this filing, or such shorter time as the Commission may designate if consistent with the protection of investors and the public interest, the proposed rule change has become effective pursuant to

[12] 17 CFR 200.30–3(a)(12).

[1] 15 U.S.C. 78s(b)(1).

[2] 15 U.S.C. 78a.

[3] 17 CFR 240.19b–4.

[4] *See* Securities Exchange Act Release No. 65566 (October 14, 2011), 76 FR 65247 (October 20, 2011) (SR–ISE–2011–69).

[5] *See* Securities Exchange Act Release No. 66171 (January 17, 2012), 77 FR 3297 (January 23, 2012) (File Nos. SR–EDGA–2011–34; SR–EDGX–2011–33; SR–ISE–2011–69; SR–NYSE–2011–51; SR–NYSEAmex–2011–78; SR–NYSEArca–2011–72).

[6] *Id.*

[7] *See supra* note 4.

[8] 15 U.S.C. 78f(b).

[9] 15 U.S.C. 78f(b)(5).

Section 19(b)(3)(A) of the Act[10] and Rule 19b–4(f)(6) thereunder.[11]

At any time within 60 days of the filing of the Proposed Rule Change, the Commission summarily may temporarily suspend such rule change if it appears to the Commission that such action is necessary or appropriate in the public interest, for the protection of investors, or otherwise in furtherance of the purposes of the Exchange Act.

IV. Solicitation of Comments

Interested persons are invited to submit written data, views, and arguments concerning the foregoing, including whether the proposed rule change is consistent with the Act. Comments may be submitted by any of the following methods:

Electronic Comments

- Use the Commission's Internet comment form (*http://www.sec.gov/rules/sro.shtml*); or
- Send an email to *rule-comments@sec.gov.* Please include File Number SR–ISE–2012–24 on the subject line.

Paper Comments

- Send paper comments in triplicate to Elizabeth M. Murphy, Secretary, Securities and Exchange Commission, 100 F Street NE., Washington, DC 20549–1090.

All submissions should refer to File Number SR–ISE–2012–24. This file number should be included on the subject line if email is used. To help the Commission process and review your comments more efficiently, please use only one method. The Commission will post all comments on the Commission's Internet Web site (*http://www.sec.gov/rules/sro.shtml*). Copies of the submission, all subsequent amendments, all written statements with respect to the proposed rule change that are filed with the Commission, and all written communications relating to the proposed rule change between the Commission and any person, other than those that may be withheld from the public in accordance with the provisions of 5 U.S.C. 552, will be available for Web site viewing and printing in the Commission's Public Reference Room, 100 F Street NE., Washington, DC 20549, on official business days between the hours of 10 a.m. and 3 p.m. Copies of the filing also will be available for inspection and copying at the principal office of the Exchange. All comments received will be posted without change; the Commission does not edit personal identifying information from submissions. You should submit only information that you wish to make available publicly. All submissions should refer to File Number SR–ISE–2012–24 and should be submitted on or before April 20, 2012.

For the Commission, by the Division of Trading and Markets, pursuant to delegated authority.[12]

Kevin M. O'Neill,

Deputy Secretary.

[FR Doc. 2012–7632 Filed 3–29–12; 8:45 am]

BILLING CODE 8011–01–P

[10] 15 U.S.C. 78s(b)(3)(A).

[11] 17 CFR 240.19b–4(f)(6). In addition, Rule 19b–4(f)(6)(iii) requires a self-regulatory organization to provide the Commission with written notice of its intent to file the proposed rule change, along with a brief description and text of the proposed rule change, at least five business days prior to the date of filing of the proposed rule change, or such shorter time as designated by the Commission. The Exchange has fulfilled this requirement.

[12] 17 CFR 200.30–3(a)(12).

SECURITIES AND EXCHANGE COMMISSION

[Release No. 34–66657; File No. SR–EDGX–2012–10]

Self-Regulatory Organizations; EDGX Exchange, Inc.; Notice of Filing and Immediate Effectiveness of Proposed Rule Change Clarifying That Rule Change in Connection With Proposed Combination Between NYSE Euronext and Deutsche Börse AG Will Not Become Effective

March 26, 2012

Pursuant to Section 19(b)(1)[1] of the Securities Exchange Act of 1934 (the ''Exchange Act'' or ''Act''),[2] and Rule 19b–4 thereunder,[3] notice is hereby given that on March 19, 2012, the EDGX Exchange, Inc. (the ''Exchange'' or ''EDGX'') filed with the Securities and Exchange Commission (the ''Commission'') the proposed rule change (the ''Proposed Rule Change'') as described in Items I and II below, which Items have been prepared by the Exchange. The Commission is publishing this notice to solicit comments on the Proposed Rule Change from interested persons.

I. Self-Regulatory Organization's Statement of the Terms of Substance of the Proposed Rule Change

The Exchange previously submitted a proposed rule change[4] (the ''Holdco Proposal'') in connection with the proposed business combination (the ''Combination'') of NYSE Euronext, a Delaware corporation, and Deutsche Börse AG, an *Aktiengesellschaft* organized under the laws of the Federal Republic of Germany (''Deutsche Börse''). The Holdco Proposal was conditionally approved by the Commission.[5] The Exchange is submitting this Proposed Rule Change in order to clarify that the Holdco Proposal will not become effective. The text of the Proposed Rule Change is available on the Exchange's Web site *www.directedge.com,* at the principal office of the Exchange, and at the Commission's Public Reference Room.

II. Self-Regulatory Organization's Statement of the Purpose of, and Statutory Basis for, the Proposed Rule Change

In its filing with the Commission, the Exchange has included statements concerning the purpose of, and basis for, the Proposed Rule Change. The text of these statements may be examined at the places specified in Item IV below. The Exchange has prepared summaries, set forth in Sections A, B and C below, of the most significant aspects of such statements.

A. Self-Regulatory Organization's Statement of the Purpose of, and Statutory Basis for, the Proposed Rule Change

1. Purpose

The Exchange proposes to clarify that the Combination contemplated by the Holdco Proposal will not be completed and, therefore, the Holdco Proposal conditionally approved by the Commission[6] will not become effective.

The Holdco Proposal was submitted to the Commission in connection with the Combination.[7] The purpose of the Holdco Proposal was to adopt the rules necessary to permit NYSE Euronext and Deutsche Börse to effect the Combination and to amend certain provisions of the organizational and other governance documents of Alpha Beta Netherlands Holding N.V., a holding company organized under the laws of the Netherlands (''Holdco''), and ISE Holdings, Inc.

The Commission's approval of the Holdco Proposal was conditioned on completion of the Combination, and the

[1] 15 U.S.C. 78s(b)(1).

[2] 15 U.S.C. 78a.

[3] 17 CFR 240.19b–4.

[4] *See* Securities Exchange Act Release No. 65565 (October 14, 2011), 76 FR 65255 (October 20, 2011) (SR–EDGX–2011–33).

[5] *See* Securities Exchange Act Release No. 66171 (January 17, 2012), 77 FR 3297 (January 23, 2012) (File Nos. SR–EDGA–2011–34; SR–EDGX–2011–33; SR–ISE–2011–69; SR–NYSE–2011–51; SR–NYSEAmex–2011–78; SR–NYSEArca–2011–72).

[6] *Id.*

[7] *See supra* note 4.

Commission noted that if the Combination is not consummated, the Holdco Proposal would not become effective.

On February 2, 2012, following the European Commission's decision to prohibit the Combination, NYSE Euronext and Deutsche Börse agreed to terminate the Business Combination Agreement, dated as of February 15, 2011, as amended by Amendment No. 1 dated as of May 2, 2011 and by Amendment No. 2 dated as of June 16, 2011, by and among NYSE Euronext, Deutsche Börse, Holdco and Pomme Merger Corporation, a Delaware corporation and newly formed wholly owned subsidiary of Holdco.

Accordingly, the Combination contemplated by the Holdco Proposal will not be completed and, therefore, the Holdco Proposal conditionally approved by the Commission will not become effective.

2. Statutory Basis

The Exchange believes that this filing is consistent with Section 6(b) [8] of the Securities Exchange Act of 1934 (the ''Exchange Act'') in general, and furthers the objectives of Section 6(b)(5) [9] in particular, in that it is designed to prevent fraudulent and manipulative acts and practices, to promote just and equitable principles of trade, to foster cooperation and coordination with persons engaged in facilitating transactions in securities, and to remove impediments to and perfect the mechanism of a free and open market and a national market system. Specifically, the Exchange believes that the Proposed Rule Change will clarify the corporate structure of the Exchange, which will promote just and equitable principles of trade and help to protect investors and the public interest.

B. Self-Regulatory Organization's Statement on Burden on Competition

The Exchange does not believe that the Proposed Rule Change will impose any burden on competition that is not necessary or appropriate in furtherance of the purposes of the Exchange Act.

C. Self-Regulatory Organization's Statement on Comments on the Proposed Rule Change Received From Members, Participants or Others

The Exchange has neither solicited nor received written comments on the Proposed Rule Change.

[8] 15 U.S.C. 78f(b).

[9] 15 U.S.C. 78f(b)(5).

III. Date of Effectiveness of the Proposed Rule Change and Timing for Commission Action

Because the foregoing proposed rule change: (1) Does not significantly affect the protection of investors or the public interest; (2) does not impose any significant burden on competition; and (3) by its terms, does not become operative for 30 days after the date of this filing, or such shorter time as the Commission may designate if consistent with the protection of investors and the public interest, the proposed rule change has become effective pursuant to Section 19(b)(3)(A) of the Act [10] and Rule 19b–4(f)(6) thereunder.[11]

At any time within 60 days of the filing of the Proposed Rule Change, the Commission summarily may temporarily suspend such rule change if it appears to the Commission that such action is necessary or appropriate in the public interest, for the protection of investors, or otherwise in furtherance of the purposes of the Exchange Act.

IV. Solicitation of Comments

Interested persons are invited to submit written data, views, and arguments concerning the foregoing, including whether the proposed rule change is consistent with the Act. Comments may be submitted by any of the following methods:

Electronic Comments

- Use the Commission's Internet comment form (*http://www.sec.gov/rules/sro.shtml*); or
- Send an email to *rule-comments@sec.gov*. Please include File Number SR–EDGX–2012–10 on the subject line.

Paper Comments

- Send paper comments in triplicate to Elizabeth M. Murphy, Secretary, Securities and Exchange Commission, 100 F Street NE., Washington, DC 20549–1090.

All submissions should refer to File Number SR–EDGX–2012–10. This file number should be included on the subject line if email is used. To help the Commission process and review your comments more efficiently, please use only one method. The Commission will post all comments on the Commission's Internet Web site (*http://www.sec.gov/rules/sro.shtml*). Copies of the submission, all subsequent amendments, all written statements with respect to the proposed rule change that are filed with the Commission, and all written communications relating to the proposed rule change between the Commission and any person, other than those that may be withheld from the public in accordance with the provisions of 5 U.S.C. 552, will be available for Web site viewing and printing in the Commission's Public Reference Room, 100 F Street NE., Washington, DC 20549, on official business days between the hours of 10 a.m. and 3 p.m. Copies of the filing also will be available for inspection and copying at the principal office of the Exchange. All comments received will be posted without change; the Commission does not edit personal identifying information from submissions. You should submit only information that you wish to make available publicly. All submissions should refer to File Number SR–EDGX–2012–10 and should be submitted on or before April 20, 2012.

For the Commission, by the Division of Trading and Markets, pursuant to delegated authority.[12]

Kevin M. O'Neill,

Deputy Secretary.

[FR Doc. 2012–7630 Filed 3–29–12; 8:45 am]

BILLING CODE 8011–01–P

[10] 15 U.S.C. 78s(b)(3)(A).

[11] 17 CFR 240.19b–4(f)(6). In addition, Rule 19b–4(f)(6)(iii) requires a self-regulatory organization to provide the Commission with written notice of its intent to file the proposed rule change, along with a brief description and text of the proposed rule change, at least five business days prior to the date of filing of the proposed rule change, or such shorter time as designated by the Commission. The Exchange has fulfilled this requirement.

[12] 17 CFR 200.30–3(a)(12).

SECURITIES AND EXCHANGE COMMISSION

[Release No. 34–66656; File No. SR–NYSEArca–2012–22]

Self-Regulatory Organizations; NYSE Arca, Inc.; Notice of Filing of Proposed Rule Change Amending NYSE Arca Equities Rule 7.45 Adding a New Paragraph (d) That Addresses the Authority of the Exchange or Archipelago Securities LLC To Cancel Orders When a Technical or Systems Issue Occurs and Describe the Operation of an Error Account for Arca Securities

March 26, 2012.

Pursuant to Section 19(b)(1) [1] of the Securities Exchange Act of 1934 (the ''Act'') [2] and Rule 19b–4 thereunder,[3] notice is hereby given that, on March 15, 2012, NYSE Arca, Inc. (the ''Exchange'' or ''NYSE Arca'') filed with

[1] 15 U.S.C.78s(b)(1).

[2] 15 U.S.C. 78a.

[3] 17 CFR 240.19b–4.

the Securities and Exchange Commission (the ''Commission'') the proposed rule change as described in Items I and II below, which Items have been prepared by the self-regulatory organization. The Commission is publishing this notice to solicit comments on the proposed rule change from interested persons.

I. Self-Regulatory Organization's Statement of the Terms of the Substance of the Proposed Rule Change

The Exchange proposes to amend NYSE Arca Equities Rule 7.45 by adding a new paragraph (d) that addresses the authority of the Exchange or Archipelago Securities LLC (''Arca Securities'') to cancel orders when a technical or systems issue occurs and to describe the operation of an error account for Arca Securities. The text of the proposed rule change is available at the Exchange, the Commission's Public Reference Room, and *www.nyse.com.*

II. Self-Regulatory Organization's Statement of the Purpose of, and the Statutory Basis for, the Proposed Rule Change

In its filing with the Commission, the self-regulatory organization included statements concerning the purpose of, and basis for, the proposed rule change and discussed any comments it received on the proposed rule change. The text of those statements may be examined at the places specified in Item IV below. The Exchange has prepared summaries, set forth in sections A, B, and C below, of the most significant parts of such statements.

A. Self-Regulatory Organization's Statement of the Purpose of, and the Statutory Basis for, the Proposed Rule Change

1. Purpose

The Exchange proposes to amend NYSE Arca Equities Rule 7.45 by adding a new paragraph (d) that addresses the authority of the Exchange or Arca Securities to cancel orders when a technical or systems issue occurs and to describe the operation of an error account for Arca Securities.[4]

Arca Securities is the approved routing broker of the Exchange, subject to the conditions listed in NYSE Arca Equities Rule 7.45. The Exchange relies on Arca Securities to provide outbound routing services from itself to routing destinations of Arca Securities (''routing destinations'').[5] When Arca Securities routes orders to a routing destination, it does so by sending a corresponding order in its own name to the routing destination. In the normal course, routed orders that are executed at routing destinations are submitted for clearance and settlement in the name of Arca Securities, and Arca Securities arranges for any resulting securities positions to be delivered to the ETP Holder that submitted the corresponding order to the Exchange. However, from time to time, the Exchange and Arca Securities encounter situations in which it becomes necessary to cancel orders and resolve error positions.[6]

Examples of Circumstances That May Lead to Canceled Orders

A technical or systems issue may arise at Arca Securities, a routing destination, or the Exchange that may cause the Exchange or Arca Securities to take steps to cancel orders if the Exchange or Arca Securities determines that such action is necessary to maintain a fair and orderly market. The examples set forth below describe some of the circumstances in which the Exchange or Arca Securities may decide to cancel orders.

Example 1. If Arca Securities or a routing destination experiences a technical or systems issue that results in Arca Securities not receiving responses to immediate or cancel (''IOC'') orders that it sent to the routing destination, and that issue is not resolved in a timely manner, Arca Securities or the Exchange would seek to cancel the routed orders affected by the issue.[7] For instance, if Arca Securities experiences a connectivity issue affecting the manner in which it sends or receives order messages to or from routing destinations, it may be unable to receive timely execution or cancellation reports from the routing destinations, and Arca Securities or the Exchange may consequently seek to cancel the affected routed orders. Once the decision is made to cancel those routed orders, any cancellation that an ETP Holder submitted to the Exchange on its initial order during such a situation would be honored.[8]

Example 2. If the Exchange experiences a systems issue, the Exchange may take steps to cancel all outstanding orders affected by that issue and notify affected ETP holders of the cancellations. In those cases, the Exchange would seek to cancel any routed orders related to the ETP holders' initial orders.

Examples of Circumstances That May Lead to Error Positions

In some instances, the technical or systems issue at Arca Securities, a routing destination, the Exchange, or a non-affiliate third-party Routing Broker may also result in Arca Securities acquiring an error position that it must resolve. The examples set forth below describe some of the circumstances in which error positions may arise.

Example A. Error positions may result from routed orders that the Exchange or Arca

[4] Arca Securities is a facility of the Exchange. Accordingly, under NYSE Arca Equities Rule 7.45, the Exchange is responsible for filing with the Commission rule changes and fees relating to Arca Securities' functions. In addition, the Exchange is using the phrase ''Arca Securities or the Exchange'' in this rule filing to reflect the fact that a decision to take action with respect to orders affected by a technical or systems issue may be made in the capacity of Arca Securities or the Exchange depending on where those orders are located at the time of that decision.

From time to time, the Exchange also uses non-affiliate third-party broker-dealers to provide outbound routing services (*i.e.,* third-party Routing Brokers). In those cases, orders are submitted to the third-party Routing Broker through Arca Securities, the third-party Routing Broker routes the orders to the routing destination in its name, and any executions are submitted for clearance and settlement in the name of Arca Securities so that any resulting positions are delivered to Arca Securities upon settlement. As described above, Arca Securities normally arranges for any resulting securities positions to be delivered to the ETP Holder that submitted the corresponding order to the Exchange. If error positions (as defined in proposed Rule 7.45(d)(2)) result in connection with the Exchange's use of a third-party Routing Broker for outbound routing, and those positions are delivered to Arca Securities through the clearance and settlement process, Arca Securities would be permitted to resolve those positions in accordance with proposed Rule 7.45(d). If the third-party Routing Broker received error positions in connection with its role as a routing broker for the Exchange, and the error positions were not delivered to Arca Securities through the clearance and settlement process, then the third-party Routing Broker would resolve the error positions itself, and Arca Securities would not be permitted to accept the error positions, as set forth in proposed Rule 7.45(d)(2)(B).

[5] The Exchange has also been approved to receive inbound routes of equities orders by Arca Securities from the New York Stock Exchange LLC (''NYSE'') and NYSE Amex LLC (''NYSE Amex''). *See* NYSE Arca Equities Rule 7.45(c).

[6] The examples described in this filing are not intended to be exclusive. Proposed NYSE Arca Equities Rule 7.45(d) would provide general authority for the Exchange or Arca Securities to cancel orders in order to maintain fair and orderly markets when technical and systems issues are occurring, and Rule 7.45(d) also would set forth the manner in which error positions may [sic] handled by the Exchange or Arca Securities. The proposed rule change is not limited to addressing order cancellation or error positions resulting only from the specific examples described in this filing.

[7] In a normal situation (*i.e.,* one in which a technical or systems issue does not exist), Arca Securities should receive an immediate response to an IOC order from a routing destination, and would pass the resulting fill or cancellation on to the ETP Holder. After submitting an order that is routed to a routing destination, if an ETP Holder sends an instruction to cancel that order, the cancellation is held by the Exchange until a response is received from the routing destination. For instance, if the routing destination executes that order, the execution would be passed on to the ETP Holder and the cancellation instruction would be disregarded.

[8] If an ETP Holder did not submit a cancellation to the Exchange, however, that initial order would remain ''live'' and thus be eligible for execution or posting on the Exchange, and neither the Exchange nor Arca Securities would treat any execution of that initial order or any subsequent routed order related to that initial order as an error.

Securities attempts to cancel but that are executed before the routing destination receives the cancellation message or that are executed because the routing destination is unable to process the cancellation message. Using the situation described in Example 1 above, assume that the Exchange seeks to cancel orders routed to a routing destination because it is not receiving timely execution or cancellation reports from the routing destination. In such a situation, Arca Securities may still receive executions from the routing destination after connectivity is restored, which it would not then allocate to ETP Holders because of the earlier decision to cancel the affected routed orders. Instead, Arca Securities would post those positions into its error account and resolve the positions in the manner described below.

Example B. Error positions may result from an order processing issue at a routing destination. For instance, if a routing destination experienced a systems problem that affects its order processing, it may transmit back a message purporting to cancel a routed order, but then subsequently submit an execution of that same order (*i.e.,* a locked-in trade) to The Depository Trust & Clearing Corporation (''DTCC'') for clearance and settlement. In such a situation, the Exchange would not then allocate the execution to the ETP Holder because of the earlier cancellation message from the routing destination. Instead, Arca Securities would post those positions into its error account and resolve the positions in the manner described below.

Example C. Error positions may result if Arca Securities receives an execution report from a routing destination but does not receive clearing instructions for the execution from the routing destination. For instance, assume that an ETP Holder sends the Exchange an order to buy 100 shares of ABC stock, which causes Arca Securities to send an order to a routing destination that is subsequently executed, cleared and closed out by that routing destination, and the execution is ultimately communicated back to that ETP Holder. On the next trading day (T+1), if the routing destination does not provide clearing instructions for that execution, Arca Securities would still be responsible for settling that ETP Holder's purchase, but would be left with a short position in its error account.[9] Arca Securities would resolve the position in the manner described below.

Example D. Error positions may result from a technical or systems issue that causes orders to be executed in the name of Arca Securities that are not related to Arca Securities' function as the Exchange's routing broker and are not related to any corresponding orders of ETP Holders. As a result, Arca Securities would not be able to assign any positions resulting from such an issue to ETP Holders. Instead, Arca Securities would post those positions into its error account and resolve the positions in the manner described below.

Example E. Error positions may result from a technical or systems issue through which the Exchange does not receive sufficient notice that an ETP Holder that has executed trades on the Exchange has lost the ability to clear trades through DTCC. In such a situation, the Exchange would not have valid clearing information, which would prevent the trade from being processed pursuant to Rule 7.41(a). Accordingly, Arca Securities would assume that ETP Holder's side of the trades so that the counterparties can settle the trades. Arca Securities would post those positions into its error account and resolve the positions in the manner described below.

In the circumstances described above, Arca Securities may not learn about an error position until T+1, either: (1) During the clearing process when a routing destination has submitted to DTCC a transaction for clearance and settlement for which Arca Securities never received an execution confirmation; or (2) when a routing destination does not recognize a transaction submitted by Arca Securities to DTCC for clearance and settlement. Moreover, the affected ETP Holders' trade may not be nullified absent express authority under Exchange rules.[10]

Proposed Amendments to NYSE Arca Equities Rule 7.45

The Exchange proposes to amend NYSE Arca Equities Rule 7.45 to add new paragraph (d) to address the cancellation of orders due to technical or systems issues and the use of an error account by Arca Securities.

Specifically, under paragraph (d)(1) of the proposed rule, the Exchange or Arca Securities would be expressly authorized to cancel orders as may be necessary to maintain fair and orderly markets if a technical or systems issue occurred at the Exchange, Arca Securities, or a routing destination.[11] The Exchange or Arca Securities would be required to provide notice of the cancellation to affected ETP Holders as soon as practicable.

Paragraph (d)(2) of the proposed rule would permit Arca Securities to maintain an error account for the purpose of addressing positions that result from a technical or systems issue at Arca Securities, the Exchange, a routing destination, or a non-affiliate third-party Routing Broker that affects one or more orders (''error positions''). By definition, an error position would not include any position that results from an order submitted by an ETP Holder to the Exchange that is executed on the Exchange and processed pursuant to NYSE Arca Rule 7.41(a).[12] Arca Securities also would not be permitted to accept any positions in its error account from an account of an ETP Holder and could not permit any ETP Holder to transfer any positions from the ETP Holder's account to Arca Securities' error account under the proposed rule.[13] However, if a technical or systems issue results in the Exchange not having valid clearing instructions for an ETP Holder to a trade, Arca Securities may assume that ETP Holder's side of the trade so that the trade can be processed pursuant to NYSE Arca Rule 7.41(a).[14]

Under paragraph (d)(3), in connection with a particular technical or systems issue, Arca Securities or the Exchange would be permitted to either (i) assign all resulting error positions to ETP Holders, or (ii) have all resulting error positions liquidated, as described below. Any determination to assign or liquidate error positions, as well as any resulting assignments, would be required to be made in a nondiscriminatory fashion.

Arca Securities or the Exchange would be required to assign all error positions resulting from a particular technical or systems issue to the applicable ETP Holders affected by that technical or systems issue if Arca Securities or the Exchange:

[9] To the extent that Arca Securities incurred a loss in covering its short position, it would submit a reimbursement claim to that routing destination.

[10] *See, e.g.,* NYSE Arca Equities Rule 7.10 (regarding clearly erroneous executions).

[11] Such a situation may not cause the Exchange to declare self-help against the routing destination pursuant to Rule 611 of Regulation NMS. If the Exchange or Arca Securities determines to cancel orders routed to a routing destination under proposed Rule 7.45(d), but does not declare self-help against that routing destination, the Exchange would continue to be subject to the trade-through requirements in Rule 611 with respect to that routing destination.

[12] As provided in NYSE Arca Equities Rule 7.41(a), ''the details of each transaction executed within the NYSE Arca Marketplace [the Exchange] shall be automatically processed for clearance and settlement on a locked-in basis. ETP Holders need not separately report their transactions to the Corporation for trade comparison purposes.''

[13] The purpose of this provision is to clarify that Arca Securities may address error positions under the proposed rule that are caused by a technical or systems issue, but that Arca Securities may not accept from an ETP Holder positions that are delivered to the ETP Holder through the clearance and settlement process, even if those positions may have been related to a technical or systems issue at Arca Securities, the Exchange, a routing destination of Arca Securities, or a non-affiliate third-party Routing Broker. This provision would not apply, however, to situations like the one described above in which Arca Securities incurred a short position to settle an ETP Holder purchase, as the ETP Holder did not yet have a position in its account as a result of the purchase at the time of Arca Securities' action (i.e., Arca Securities' action was necessary for the purchase to settle into the ETP Holder's account). Moreover, to the extent an ETP Holder receives positions pursuant to Rule 7.41(a) in connection with a technical or systems issue, that ETP Holder may seek to rely on NYSE Arca Equities Rule 13.2 if it experiences a loss. That rule provides ETP Holders with the ability to file claims against the Exchange ''for the failure of its systems or facilities.''

[14] *See* Example E above.

• Determined that it has accurate and sufficient information (including valid clearing information) to assign the positions to all of the applicable ETP Holders affected by that technical or systems issue;

• Determined that it has sufficient time pursuant to normal clearance and settlement deadlines to evaluate the information necessary to assign the positions to all of the applicable ETP Holders affected by that technical or systems issue; and

• Had not determined to cancel all orders affected by that technical or systems issue.

For example, a technical or systems issue of limited scope or duration may occur at a routing destination, and the resulting trades may be submitted for clearance and settlement by such routing destination to DTCC. If there were a small number of trades, there may be sufficient time to match positions with ETP Holder orders and avoid using the error account.

There may be scenarios, however, where Arca Securities determines that it is unable to assign all error positions resulting from a particular technical or systems issue to all of the affected ETP Holders, or determines to cancel all affected routed orders. For example, in some cases, the volume of questionable executions and positions resulting from a technical or systems issue might be such that the research necessary to determine which ETP Holders to assign those executions to could be expected to extend past the normal settlement cycle for such executions. Furthermore, if a routing destination experiences a technical or systems issue after Arca Securities has transmitted IOC orders to it that prevents Arca Securities from receiving responses to those orders, Arca Securities or the Exchange may determine to cancel all routed orders affected by that issue. In such a situation, Arca Securities or the Exchange would not pass on to the ETP Holders any executions on the routed orders received from the routing destination.

The proposed rule also would require Arca Securities to liquidate error positions as soon as practicable.[15] In liquidating error positions, Arca Securities would be required to provide complete time and price discretion for the trading to liquidate the error positions to a third-party broker-dealer and could not attempt to exercise any influence or control over the timing or methods of trading to liquidate the error positions. Arca Securities also would be required to establish and enforce policies and procedures reasonably designed to restrict the flow of confidential and proprietary information between the third-party broker-dealer and Arca Securities/the Exchange associated with the liquidation of the error positions.

Under proposed paragraph (d)(4), Arca Securities and the Exchange would be required to make and keep records to document all determinations to treat positions as error positions and all determinations for the assignment of error positions to ETP Holders or the liquidation of error positions, as well as records associated with the liquidation of error positions through the third-party broker-dealer.

2. Statutory Basis

The proposed rule change is consistent with Section 6(b)[16] of the Securities Exchange Act of 1934 (the ''Act''), in general, and furthers the objectives of Section 6(b)(5),[17] in particular, in that it is designed to prevent fraudulent and manipulative acts and practices, to promote just and equitable principles of trade, to foster cooperation and coordination with persons engaged in facilitating transactions in securities, to remove impediments to and perfect the mechanism of a free and open market and a national market system and, in general, to protect investors and the public interest, and it is not designed to permit unfair discrimination among customers, brokers, or dealers. The Exchange believes that this proposal is in keeping with those principles since Arca Securities' or the Exchange's ability to cancel orders during a technical and systems issue and to maintain an error account facilitates the smooth and efficient operations of the market. Specifically, the Exchange believes that allowing Arca Securities or the Exchange to cancel orders during a technical or systems issue would allow the Exchange to maintain fair and orderly markets. Moreover, the Exchange believes that allowing Arca Securities to assume error positions in an error account and to liquidate those positions, subject to the conditions set forth in the proposed amendments to NYSE Arca Equities Rule 7.45, would be the least disruptive means to correct these errors, except in cases where Arca Securities can assign all such error positions to all affected ETP Holders of the Exchange. Overall, the proposed amendments are designed to ensure full trade certainty for market participants and to avoid disrupting the clearance and settlement process. The proposed amendments are also designed to provide a consistent methodology for handling error positions in a manner that does not discriminate among ETP Holders. The proposed amendments are also consistent with Section 6 of the Act insofar as they would require Arca Securities to establish controls to restrict the flow of any confidential information between the third-party broker and Arca Securities/the Exchange associated with the liquidation of error positions.

B. Self-Regulatory Organization's Statement on Burden on Competition

The Exchange does not believe that the proposed rule change will impose any burden on competition that is not necessary or appropriate in furtherance of the purposes of the Act.

C. Self-Regulatory Organization's Statement on Comments on the Proposed Rule Change Received From Members, Participants, or Others

No written comments were solicited or received with respect to the proposed rule change.

III. Date of Effectiveness of the Proposed Rule Change and Timing for Commission Action

Within 45 days of the date of publication of this notice in the **Federal Register** or within such longer period (i) as the Commission may designate up to 90 days of such date if it finds such longer period to be appropriate and publishes its reasons for so finding or (ii) as to which the self-regulatory organization consents, the Commission will:

(A) By order approve or disapprove such proposed rule change, or

(B) Institute proceedings to determine whether the proposed rule change should be disapproved.

IV. Solicitation of Comments

Interested persons are invited to submit written data, views, and arguments concerning the foregoing, including whether the proposed rule change is consistent with the Act. Comments may be submitted by any of the following methods:

Electronic Comments

• Use the Commission's Internet comment form (*http://www.sec.gov/rules/sro.shtml*); or

[15] If Arca Securities determines in connection with a particular technical or systems issue that some error positions can be assigned to some affected ETP Holders but other error positions cannot be assigned, Arca Securities would be required under the proposed rule to liquidate all such error positions (including those positions that could be assigned to the affected ETP Holders).

[16] 15 U.S.C. 78f(b).

[17] 15 U.S.C. 78f(b)(5).

• Send an email to *rule-comments@sec.gov.* Please include File Number SR–NYSEArca–2012–22 on the subject line.

Paper Comments

• Send paper comments in triplicate to Elizabeth M. Murphy, Secretary, Securities and Exchange Commission, 100 F Street NE., Washington, DC 20549–1090.

All submissions should refer to File Number SR–NYSEArca–2012–22. This file number should be included on the subject line if email is used. To help the Commission process and review your comments more efficiently, please use only one method. The Commission will post all comments on the Commission's Internet Web site (*http://www.sec.gov/rules/sro.shtml*). Copies of the submission, all subsequent amendments, all written statements with respect to the proposed rule change that are filed with the Commission, and all written communications relating to the proposed rule change between the Commission and any person, other than those that may be withheld from the public in accordance with the provisions of 5 U.S.C. 552, will be available for Web site viewing and printing in the Commission's Public Reference Room, 100 F Street NE., Washington, DC 20549, on official business days between the hours of 10 a.m. and 3 p.m. Copies of the filing also will be available for inspection and copying at the principal office of the Exchange. All comments received will be posted without change; the Commission does not edit personal identifying information from submissions. You should submit only information that you wish to make available publicly. All submissions should refer to File Number SR–NYSEArca–2012–22, and should be submitted on or before April 20, 2012.

For the Commission, by the Division of Trading and Markets, pursuant to delegated authority.[18]

Kevin M. O'Neill,

Deputy Secretary.

[FR Doc. 2012–7629 Filed 3–29–12; 8:45 am]

BILLING CODE 8011–01–P

[18] 17 CFR 200.30–3(a)(12).

SMALL BUSINESS ADMINISTRATION

[Disaster Declaration #13056 and #13057]

Indiana Disaster #IN–00042

AGENCY: U.S. Small Business Administration.

ACTION: Notice.

SUMMARY: This is a Notice of the Presidential declaration of a major disaster for Public Assistance Only for the State of Indiana (FEMA–4058–DR), dated 03/22/2012.

Incident: Severe Storms, Straight-line Winds, and Tornadoes.

Incident Period: 02/29/2012 through 03/03/2012.

Effective Date: 03/22/2012.

Physical Loan Application Deadline Date: 05/21/2012.

Economic Injury (EIDL) Loan Application Deadline Date: 12/24/2012.

ADDRESSES: Submit completed loan applications to: U.S. Small Business Administration, Processing and Disbursement Center, 14925 Kingsport Road, Fort Worth, TX 76155.

FOR FURTHER INFORMATION CONTACT: A. Escobar, Office of Disaster Assistance, U.S. Small Business Administration, 409 3rd Street SW., Suite 6050, Washington, DC 20416.

SUPPLEMENTARY INFORMATION: Notice is hereby given that as a result of the President's major disaster declaration on 03/22/2012, Private Non-Profit organizations that provide essential services of governmental nature may file disaster loan applications at the address listed above or other locally announced locations.

The following areas have been determined to be adversely affected by the disaster:

Primary Counties: Clark, Jefferson, Ripley, Scott, Washington.

The Interest Rates are:

	Percent
For Physical Damage:	
Non-Profit Organizations with Credit Available Elsewhere ...	3.125
Non-Profit Organizations without Credit Available Elsewhere	3.000
For Economic Injury:	
Non-Profit Organizations without Credit Available Elsewhere	3.000

The number assigned to this disaster for physical damage is 13056C and for economic injury is 13057C.

(Catalog of Federal Domestic Assistance Numbers 59002 and 59008)

James E. Rivera,

Associate Administrator for Disaster Assistance.

[FR Doc. 2012–7650 Filed 3–29–12; 8:45 am]

BILLING CODE 8025–01–P

SMALL BUSINESS ADMINISTRATION

[Disaster Declaration #13050 and #13051]

Kentucky Disaster Number KY–00045

AGENCY: U.S. Small Business Administration.

ACTION: Amendment 1.

SUMMARY: This is an amendment of the Presidential declaration of a major disaster for Public Assistance Only for the Commonwealth of Kentucky (FEMA–4057–DR), dated 03/16/2012.

Incident: Severe Storms, Tornadoes, Straight-line Winds, and Flooding.

Incident Period: 02/29/2012 through 03/03/2012.

Effective Date: 03/20/2012.

Physical Loan Application Deadline Date: 05/15/2012.

Economic Injury (EIDL) Loan Application Deadline Date: 12/17/2012.

ADDRESSES: Submit completed loan applications to: U.S. Small Business Administration, Processing and Disbursement Center, 14925 Kingsport Road, Fort Worth, TX 76155.

FOR FURTHER INFORMATION CONTACT: A. Escobar, Office of Disaster Assistance, U.S. Small Business Administration, 409 3rd Street SW., Suite 6050, Washington, DC 20416.

SUPPLEMENTARY INFORMATION: The notice of the President's major disaster declaration for Private Non-Profit organizations in the Commonwealth of Kentucky, dated 03/16/2012, is hereby amended to include the following areas as adversely affected by the disaster.

Primary Counties: Ballard, Johnson, Kenton, Larue, Pendleton, Trimble, Wolfe.

All other information in the original declaration remains unchanged.

(Catalog of Federal Domestic Assistance Numbers 59002 and 59008)

James E. Rivera,

Associate Administrator for Disaster Assistance.

[FR Doc. 2012–7654 Filed 3–29–12; 8:45 am]

BILLING CODE 8025–01–P

SMALL BUSINESS ADMINISTRATION

[Disaster Declaration #13054 and #13055]

West Virginia Disaster #WV–00027

AGENCY: U.S. Small Business Administration.

ACTION: Notice.

SUMMARY: This is a Notice of the Presidential declaration of a major disaster for the State of West Virginia (FEMA–4061–DR), dated 03/22/2012.

Incident: Severe Storms, Flooding, Mudslides, and Landslides.

Incident Period: 03/15/2012 and continuing.

Effective Date: 03/22/2012.

Physical Loan Application Deadline Date: 05/21/2012.

Economic Injury (EIDL) Loan Application Deadline Date: 12/24/2012.

ADDRESSES: Submit completed loan applications to: U.S. Small Business Administration, Processing And Disbursement Center, 14925 Kingsport Road, Fort Worth, TX 76155.

FOR FURTHER INFORMATION CONTACT: A. Escobar, Office of Disaster Assistance, U.S. Small Business Administration, 409 3rd Street SW., Suite 6050, Washington, DC 20416.

SUPPLEMENTARY INFORMATION: Notice is hereby given that as a result of the President's major disaster declaration on 03/22/2012, applications for disaster loans may be filed at the address listed above or other locally announced locations.

The following areas have been determined to be adversely affected by the disaster:

Primary Counties (Physical Damage and Economic Injury Loans): Logan.

Contiguous Counties (Economic Injury Loans Only):

West Virginia: Boone, Lincoln, Mingo, Wyoming.

The Interest Rates are:

	Percent
For Physical Damage:	
Homeowners With Credit Available Elsewhere	3.750
Homeowners Without Credit Available Elsewhere	1.875
Businesses With Credit Available Elsewhere	6.000
Businesses Without Credit Available Elsewhere	4.000
Non-Profit Organizations With Credit Available Elsewhere	3.125
Non-Profit Organizations Without Credit Available Elsewhere:	3.000
For Economic Injury:	
Businesses & Small Agricultural Cooperatives Without Credit Available Elsewhere	4.000
Non-Profit Organizations Without Credit Available Elsewhere	3.000

The number assigned to this disaster for physical damage is 13054B and for economic injury is 130550.

(Catalog of Federal Domestic Assistance Numbers 59002 and 59008)

James E. Rivera,

Associate Administrator for Disaster Assistance.

[FR Doc. 2012–7652 Filed 3–29–12; 8:45 am]

BILLING CODE 8025–01–P

SOCIAL SECURITY ADMINISTRATION

Agency Information Collection Activities: Proposed Request and Comment Request

The Social Security Administration (SSA) publishes a list of information collection packages requiring clearance by the Office of Management and Budget (OMB) in compliance with Public Law 104–13, the Paperwork Reduction Act of 1995, effective October 1, 1995. This notice includes revisions and one extension of OMB-approved information collections.

SSA is soliciting comments on the accuracy of the agency's burden estimate; the need for the information; its practical utility; ways to enhance its quality, utility, and clarity; and ways to minimize burden on respondents, including the use of automated collection techniques or other forms of information technology. Mail, email, or fax your comments and recommendations on the information collection(s) to the OMB Desk Officer and SSA Reports Clearance Officer at the following addresses or fax numbers.

(OMB)

Office of Management and Budget, Attn: Desk Officer for SSA, *Fax:* 202–395–6974, *Email address: OIRA_Submission@omb.eop.gov*.

(SSA)

Social Security Administration, DCRDP, Attn: Reports Clearance Officer, 107 Altmeyer Building, 6401 Security Blvd., Baltimore, MD 21235, *Fax:* 410–966–2830, *Email address: OPLM.RCO@ssa.gov*.

I. The information collections below are pending at SSA. SSA will submit them to OMB within 60 days from the date of this notice. To be sure we consider your comments, we must receive them no later than May 29, 2012. Individuals can obtain copies of the collection instruments by calling the SSA Reports Clearance Officer at 410–965–8783 or by writing to the above email address.

1. Waiver of Right to Appear—Disability Hearing—20 CFR 404.913–404.914, 404.916(b)(5), 416.1413–416.1414, 416.1416(b)(5)—0960–0534. Claimants for Social Security disability payments or their representatives can use form SSA–773 to officially waive their right to appear at a disability hearing. The disability hearing officer uses the signed form as a basis for not holding a hearing, and for preparing a written decision on the claimant's request for disability payments based solely on the evidence of record. The respondents are claimants for disability payments under title II and title XVI of the Social Security Act (Act), or their representatives, who wish to waive their right to appear at a disability hearing.

Type of Request: Revision of an OMB-approved information collection.

Collection instrument	Number of respondents	Frequency of response	Averge burden per response (minutes)	Estimated total annual burden (hours)
SSA–773–U4	200	1	3	10

2. Request to Pay Civil Monetary Penalty by Installment Agreement—20 CFR 498—0960–0776. When SSA imposes a civil monetary penalty (CMP) for various fraudulent conduct related to SSA-administrated programs on individuals, those individuals may ask to pay the CMP through an installment agreement. For SSA to negotiate a monthly payment amount fair to both the individual and the agency, SSA needs financial information from the individual. The agency uses Form SSA–640 to obtain the information necessary to determine a repayment rate for individuals owing a CMP. The respondents are recipients of Social Security benefits and non-entitled individuals who must repay a CMP to the agency and want to do so using an installment plan.

Type of Request: Revision of an OMB-approved information collection.

Collection instrument	Number of responses	Frequency of response	Average burden per response (minutes)	Estimated total annual burden (hours)
SSA–640	400	1	120	800

II. SSA submitted the information collections below to OMB for clearance. Your comments regarding the information collections would be most useful if OMB and SSA receive them within 30 days from the date of this publication. To be sure we consider your comments, we must receive them no later than April 30, 2012. Individuals can obtain copies of the OMB clearance packages by calling the SSA Reports Clearance Officer at 410–965–8783 or by writing to the above email address.

1. Application for Parent's Insurance Benefits—20 CFR 404.370–404.374, 20 CFR 404.601–404.603—0960–0012. Section 202(h) of the Act establishes the conditions of eligibility a claimant must meet to receive monthly benefits as a parent of a deceased worker. SSA uses information from Form SSA–7–F6 to determine if the claimant meets the eligibility and application criteria. The respondents are applicants for, and recipients of, Social Security Old Age, Survivors, and Disability Insurance benefits.

Type of Request: Revision of an OMB-approved information collection.

Collection method	Number of respondents	Frequency of response	Average burden per response (minutes)	Estimated total annual burden (hours)
Modernized Claims Systems (MCS)	153	1	15	38
MCS/Signature Proxy	158	1	14	37
Paper SSA–7–F6	4	1	15	1
Total	315			76

2. Application for Supplemental Security Income—20 CFR 416.305–416.335, Subpart C—0960–0444. SSA collects information on Form SSA–8001–BK to determine an applicant's eligibility for Supplemental Security Income (SSI) and the SSI payment amounts. SSA employees also collect this information during interviews with members of the public who wish to file for SSI. SSA uses the information for two purposes: (1) to deny SSI for non-medical reasons when information the applicant provides results in ineligibility; or (2) to establish a disability claim, but defer the complete development of non-medical issues until SSA confirms the disability. The respondents are applicants for SSI.

Type of Request: Revision of an OMB-approved information collection.

Collection method	Number of respondents	Frequency of response	Average burden per response (minutes)	Estimated total annual burden (hours)
Modernized SSI Claims System (MSSICS)	1,006,400	1	15	251,600
MSSICS/Signature Proxy	326,400	1	14	76,160
Paper	27,200	1	18	8,160
Totals	1,360,000			335,920

3. Permanent Residence in the United States Under Color of Law (PRUCOL)—20 CFR 416.1615 and 416.1618—0960–0451. As per 20 CFR 416.1415 and 416.1618 of the Code of Federal Regulations, PRUCOL aliens must present evidence of their alien status when they apply for SSI payments, and periodically thereafter as part of the eligibility determination process for SSI. SSA verifies the validity of the PRUCOL evidence for grandfathered nonqualified aliens with the Department of Homeland Security (DHS), and determines if the individual qualifies for PRUCOL status based on the DHS response. Without this information, SSA is unable to determine whether the individual is eligible for SSI payments. Respondents are qualified and unqualified aliens who apply for SSI payments under PRUCOL.

Type of Request: Extension of an OMB-approved information collection.

Collection method	Number of respondents	Frequency of response	Average burden per response (minutes)	Estimated total annual burden (hours)
Personal or Telephone Interview	1,300	1	5	108

Dated: March 27, 2012.

Faye Lipsky,

Reports Clearance Officer, Office of Regulations and Reports Clearance, Social Security Administration.

[FR Doc. 2012–7712 Filed 3–29–12; 8:45 am]

BILLING CODE 4191–02–P

SOCIAL SECURITY ADMINISTRATION

[Docket No. SSA–2012–0018]

Reinstate Index to Chapter III in 20 CFR

AGENCY: Social Security Administration.

ACTION: Notice; correction.

SUMMARY: The Social Security Administration published a document in the **Federal Register** of March 27, 2012, about reinstating an Index to Chapter III in Title 20 of the Code of Federal Regulations. The document contains a misprinted Web site link.

FOR FURTHER INFORMATION CONTACT: Martin Sussman, Social Security Administration, Office of Regulations, 6401 Security Boulevard, Baltimore, MD 21235–6401, (410) 965–1767. For information on eligibility or filing for benefits, call our national toll-free number, 1–800–772–1213 or TTY 1–800–325–0778, or visit our Internet site, Social Security Online, at *http://www.socialsecurity.gov.*

Correction

In the **Federal Register** of March 27, 2012, in FR Doc. 2012–7182, on page 18290, in the third column, correct the second paragraph under **SUPPLEMENTARY INFORMATION** to read:

You may also find a listing of Acquiescence Rulings on our Web site at *http://www.socialsecurity.gov/OP_Home/rulings/rulfind1.html.*

Dated: March 27, 2012.

Martin Sussman,

Senior Advisor for Regulations, SSA.

[FR Doc. 2012–7702 Filed 3–29–12; 8:45 am]

BILLING CODE 4191–02–P

DEPARTMENT OF STATE

[Public Notice: 7836]

Notice of Public Meeting on FY 2013 U.S. Refugee Admissions Program

There will be a meeting on the President's FY 2013 U.S. Refugee Admissions Program on Tuesday, May 1, 2012 from 2 p.m. to 4 p.m. The meeting will be held at the Refugee Processing Center, 1401 Wilson Boulevard, Suite 1100, Arlington, Virginia. The meeting's purpose is to hear the views of attendees on the appropriate size and scope of the FY 2013 U.S. Refugee Admissions Program.

Persons wishing to attend this meeting must notify the Bureau of Population, Refugees, and Migration at telephone (202) 453–9257 by 5 p.m. on Tuesday, April 24, 2012, to reserve a seat. Persons wishing to present written comments should submit them by 5 p.m. on Tuesday, April 24, 2012 via email to *spruellda@state.gov* or fax (202) 453–9393.

The use of any video or audio recording device, photographing device, or any other electronic or mechanical device designed for similar purposes is prohibited at Tuesday's event.

If you have questions about the public meeting, please contact Delicia Spruell, PRM/Admissions Program Officer at (202) 453–9257. Information about the U.S. Refugee Admissions Program may be found at *http://www.state.gov/g/prm/*.

Dated: March 22, 2012.

David Robinson,

Acting, Assistant Secretary, Bureau of Population, Refugees, and Migration, Department of State.

[FR Doc. 2012–7700 Filed 3–29–12; 8:45 am]

BILLING CODE 4710–33–P

DEPARTMENT OF TRANSPORTATION

Dynamic Mobility Applications and Data Capture Management Programs; Notice of Public Meeting

AGENCY: ITS Joint Program Office, Research and Innovative Technology Administration, U.S. Department of Transportation.

ACTION: Notice.

The U.S. Department of Transportation (USDOT) Intelligent Transportation System Joint Program Office (ITS JPO) will host a free public meeting to provide stakeholders an update on the Data Capture and Management (DCM) and Dynamic Mobility Applications (DMA) programs in the Washington DC area. The public meeting will take place following the conclusion of the ITS America Annual Meeting on May 24, 2012 at the Gaylord National Hotel and Convention Center, 201 Waterfront Street, National Harbor, Maryland 20745, (301) 965–2000. Persons planning to attend the workshop or participate in the Webinar should register online at *www.itsa.org/dma* no later than May 20, 2012.

The workshop is intended to inform stakeholders on the progress, products, and plans of the two programs, and to seek input from stakeholders on the direction of the programs. The morning agenda is planned as an informational session (with concurrent webinar), while the afternoon features interactive breakout sessions on critical issues designed to garner stakeholder feedback.

About the Dynamic Mobility Application and Data Capture Management Programs

The DMA program seeks to identify, develop, and deploy applications that leverage the full potential of connected vehicles, travelers and infrastructure to enhance current operational practices and transform future surface transportation systems management. The DCM is the creation and expansion of access to high-quality, real-time and archived, multi-modal transportation data that is captured from connected vehicles (automobiles, buses, trucks, fleets), mobile devices, and infrastructure. To learn more about the ITS JPO or the connected vehicle program, please visit *www.its.dot.gov.*

If you have any questions or you need any special accommodations, please send an email to Adam Hopps at *Ahopps@itsa.org.*

Issued in Washington, DC, on the 23rd day of March 2012.

John Augustine,

Managing Director, ITS Joint Program Office.

[FR Doc. 2012–7656 Filed 3–29–12; 8:45 am]

BILLING CODE 4910–HY–P

DEPARTMENT OF TRANSPORTATION

Federal Aviation Administration

[Docket No: FAA–2011–0786]

Deadline for Notification of Intent To Use the Airport Improvement Program (AIP) Primary, Cargo, and Nonprimary Entitlement Funds for Fiscal Year 2012

AGENCY: Federal Aviation Administration, DOT.

ACTION: Notice.

SUMMARY: The Federal Aviation Administration (FAA) announces May 1, 2012, as the deadline for each airport sponsor to notify the FAA whether or not it will use its fiscal year 2012 entitlement funds available under Section 47105(f) of Title 49, United States Code, to accomplish Airport Improvement Program (AIP)-eligible projects that the sponsor previously identified through the Airports Capital Improvement Plan (ACIP) process during the preceding year.

This notice must address all entitlement funds apportioned for fiscal year 2012. After Friday, August 10, 2012, the FAA will carry over all remaining entitlement funds, and the

funds will not be available again until at least the beginning of fiscal year 2013. This notification requirement does not apply to non-primary airports covered by the block-grant program.

FOR FURTHER INFORMATION CONTACT: Mr. Frank J. San Martin, Manager, Airports Financial Assistance Division, APP–500, on (202) 267–3831.

SUPPLEMENTARY INFORMATION:

Title 49 of the United States Code, section 47105(f), provides that the sponsor of each airport to which funds are apportioned shall notify the Secretary by such time and in a form as prescribed by the Secretary, of the sponsor's intent to apply for its apportioned funds, also called entitlement funds. Therefore, the FAA is hereby notifying sponsors about steps required to ensure that the FAA has sufficient time to carryover and convert remaining entitlement funds, due to processes required under federal and local laws. This notice applies only to those airports that have had entitlement funds apportioned to them, except those nonprimary airports located in designated Block Grant States. Sponsors intending to apply for any of their available entitlement funds, including those unused from prior years, shall submit by 12 p.m. prevailing local time on Tuesday, May 1, 2012, a written indication to the designated Airports District Office (or Regional Office in regions without Airports District Offices) their intent to submit a grant application no later than close of business Friday, August 10, 2012, to use their fiscal year 2012 entitlement funds available under Title 49 of the United States Code, section 47105(f). This notice must address all entitlement funds apportioned for fiscal year 2012. By Friday, July 13, 2012, airport sponsors that have not yet submitted a final application to the FAA, should notify the FAA of any issues with meeting the final application deadline of August 10, 2012. Absent notification by the May 1st deadline and/or subsequent notification of any issues by the July 13th deadline, the FAA will proceed after Friday, August 10, 2012 to take action to carry over all remaining entitlement funds without further notice, and the funds will not be available again until at least the beginning of fiscal year 2013.

This notice is promulgated to expedite and prioritize the grant-making process.

The AIP grant program is operating under the requirements of Public Law 112–91 (Feb. 14, 2012), the ''FAA Modernization and Reform Act of 2012,'' enacted on February 14, 2012, which amends 49 U.S.C. 48103, to extend AIP through September 30, 2015.

Issued in Washington, DC on March 23, 2012.

Benito DeLeon,

Director, Office of Airport Planning and Programming.

[FR Doc. 2012–7734 Filed 3–29–12; 8:45 am]

BILLING CODE 4910–13–P

DEPARTMENT OF TRANSPORTATION

Federal Aviation Administration

Notice of Public Availability of the final Environmental Assessment (EA) and Finding of No Significant Impact/Record of Decision (FONSI/ROD) Signed March 20, 2012, for the Evaluation of the Potential Environmental Impacts Associated With the Dual Track Airport Project for the Brookings Regional Airport in Brookings, SD

AGENCY: Federal Aviation Administration (FAA), Department of Transportation (DOT).

ACTION: Notice of Availability of a final EA and FONSI/ROD for the evaluation of the potential environmental impacts associated with the Dual Track Airport Project for Brookings Regional Airport, Brookings, South Dakota.

SUMMARY: The FAA has issued the final EA and FONSI/ROD for the Dual Track Airport Project for Brookings Regional Airport. The EA was prepared in accordance with the National Environmental Policy Act (NEPA) of 1969, as amended, FAA Orders 1050.1E, ''Environmental Impacts: Policies and Procedures'' and FAA Order 5050.4B, ''NEPA Implementing Instructions for Airport Actions''.

POINT OF CONTACT: Ms. Patricia Dressler, Environmental Protection Specialist, FAA Bismarck Airports District Office (ADO), 2301 University Drive, Building 23B, Bismarck, North Dakota 58504. Telephone number (701) 323–7380.

SUPPLEMENTARY INFORMATION: The FAA is issuing a final EA and FONSI/ROD that evaluated the potential environmental impacts associated with the Dual Track Airport Project proposed Brookings Regional Airport Expansion at Brookings Regional Airport, Brookings, South Dakota. Based on the analysis contained in the final EA, the FAA has determined the selected alternative has no associated significant impacts to resources identified in accordance with FAA Order 1050.1E, Environmental Impacts: Policies and Procedures and FAA Order 5054.4B, National Environmental Policy Act Implementing Instructions for Airport Actions. Therefore, no environmental impact statement will be prepared. The Brookings Expansion project will provide an airport layout that achieves the project purpose, specifically, control over the Runway Protection Zones, sufficient runway length for the existing and anticipated future aircraft fleets, and a standard runway intersection for the two runways.

Sixteen alternatives (9 on site and 7 new airport locations) were studied for meeting the purpose and need. Thirteen of these alternatives were reviewed, analyzed, and discarded due to the degree of environmental impacts and/or not meeting purpose and need. A detailed discussion is in the FONSI/ROD Section entitled *V. Alternatives Considered and Discarded*. The selected alternative is one of three alternatives considered in the final EA. The selected alternative consists of addressing the identified needs.

The selected alternative includes the:

(1) Unconditional approval of the Airport Layout Plan (ALP) for the development listed in the EA and the decision document. (2) Issue final airspace determinations for the development listed on the ALP. (3) Eligibility for Federal grants-in-aid funds for eligible items. (4) Approval for the development or revision, implementation, and use of air traffic/flight procedures to implement the proposed action. (5) FAA finding of ''No Historic Properties Affected'' for the Proposed Action. (6) FAA finding of ''may affect, not likely to adversely affect'' the American burying beetle (Nicrophorus americanus) and the Western prairie fringed orchid (Platanthera praeclara). (7) FAA Finding of ''may affect, likely to adversely affect'' the Topeka shiner (Notropis topeka) an endangered species, however, in Formal Section 7 Consultation on the Endangered Species Act with the USFWS concluded that the action, as proposed, is not likely to jeopardize the continued existence of the Topeka shiner. (8) FAA floodplain finding that there is no prudent and practicable alternative to this impact and the propose action includes all practicable measures to minimize harm to floodplains. (9) FAA wetland finding that there is no practicable alternatives to such construction and the proposed action includes all practicable measure to minimize harm to wetlands.

These documents will be available for public review during normal business hours at:

Federal Aviation Administration
Bismarck ADO, 2301 University

Drive, Building 23B, Bismarck, North Dakota 58504;

Brookings City Hall, Engineering Department, 311 3rd Avenue, Brookings, South Dakota 57706;

Brookings Public Library, 515 3rd Street, Brookings, South Dakota 57706.

Issued in Bismarck North Dakota, March 20, 2012.

Thomas T. Schauer,

Manager, Bismarck Airport District Office FAA, Great Lakes Region.

[FR Doc. 2012–7741 Filed 3–29–12; 8:45 am]

BILLING CODE 4910–13–P

DEPARTMENT OF TRANSPORTATION

Federal Aviation Administration

Notice of Schedule Information Submission Deadline for O'Hare International Airport, San Francisco International Airport, John F. Kennedy International Airport, and Newark Liberty International Airport for the Winter 2012–2013 Scheduling Season

AGENCY: Department of Transportation, Federal Aviation Administration (FAA).

ACTION: Notice of submission deadline.

SUMMARY: Under this notice, the FAA announces the submission deadline of May 10, 2012, for Winter 2012–2013 flight schedules at Chicago's O'Hare International Airport (ORD), San Francisco International Airport (SFO), New York's John F. Kennedy International Airport (JFK), and Newark Liberty International Airport (EWR) in accordance with the International Air Transport Association (IATA) Worldwide Slot Guidelines. The deadline coincides with the schedule submission deadline for the IATA Slot Conference for the Winter 2012–2013 scheduling season.

SUPPLEMENTARY INFORMATION: The FAA has designated ORD as an IATA Level 2 airport, SFO as a Level 2 airport, JFK as a Level 3 airport, and EWR as a Level 3 airport. Scheduled operations at JFK and EWR are currently limited by FAA Orders until a final Congestion Management Rule for LaGuardia Airport, John F. Kennedy International Airport, and Newark Liberty International Airport (RIN 2120–AJ89) becomes effective but not later than October 26, 2013.[1]

The FAA is primarily concerned about planned passenger and cargo operations during peak hours, but carriers may submit schedule plans for the entire day. At ORD, the peak hours are 0700 to 2100 Central Time (1300 to 0300 UTC), at SFO from 0600 to 2300 Pacific Time (1400 to 0700 UTC), and at EWR and JFK from 0600 to 2300 Eastern Time (1100 to 0400 UTC). Carriers should submit schedule information in sufficient detail including, at minimum, the operating carrier, flight number, scheduled time of operation, frequency, and effective dates. IATA standard schedule information format and data elements (Standard Schedules Information Manual or SSIM) may be used.

The U.S. winter scheduling season for these airports is from October 28, 2012, through March 30, 2013, in recognition of the IATA northern winter period. The FAA understands there may be differences in schedule times due to different U.S. daylight saving time dates, and the FAA will accommodate these differences to the extent possible.

DATES: Schedules must be submitted no later than May 10, 2012.

ADDRESSES: Schedules may be submitted by mail to the Slot Administration Office, AGC–200, Office of the Chief Counsel, 800 Independence Ave. SW., Washington, DC 20591; by facsimile to: 202–267–7277; or by email to: *7-AWA-slotadmin@faa.gov.*

FOR FURTHER INFORMATION CONTACT: Robert Hawks, Office of the Chief Counsel, Federal Aviation Administration, 800 Independence Avenue SW., Washington, DC 20591; telephone number: 202–267–7143; fax number: 202–267–7971; email: *rob.hawks@faa.gov.*

Issued in Washington, DC, on March 27, 2012.

Rebecca B. MacPherson,

Assistant Chief Counsel for Regulations.

[FR Doc. 2012–7724 Filed 3–29–12; 8:45 am]

BILLING CODE 4910–13–P

DEPARTMENT OF TRANSPORTATION

Federal Highway Administration

Buy America Waiver Notification

AGENCY: Federal Highway Administration (FHWA), DOT.

ACTION: Notice.

SUMMARY: This notice provides information regarding the FHWA's finding that a partial Buy America waiver is appropriate for the obligation of Federal-aid Congestion Mitigation and Air Quality (CMAQ) improvement program funds for the purchase of eight 2012 Ford Escape hybrid four-wheel drive vehicles by Merced County, CA.

DATES: The effective date of the waiver is March 31, 2012.

FOR FURTHER INFORMATION CONTACT: For questions about this notice, please contact Mr. Gerald Yakowenko, FHWA Office of Program Administration, (202) 366–1562, or via email at *gerald.yakowenko@dot.gov.* For legal questions, please contact Mr. Michael Harkins, FHWA Office of the Chief Counsel, (202) 366–4928, or via email at *michael.harkins@dot.gov.* Office hours for the FHWA are from 8 a.m. to 4:30 p.m., e.t., Monday through Friday, except Federal holidays.

SUPPLEMENTARY INFORMATION:

Electronic Access

An electronic copy of this document may be downloaded from the **Federal Register**'s home page at: *http://www.archives.gov* and the Government Printing Office's database at: *http://www.gpo.gov.*

Background

The FHWA's Buy America policy in 23 CFR 635.410 requires a domestic manufacturing process for any steel or iron products (including protective coatings) that are permanently incorporated in a Federal-aid construction project. The regulation also provides for a waiver of the Buy America requirements when the application would be inconsistent with the public interest or when satisfactory quality domestic steel and iron products are not sufficiently available. This notice provides information regarding the FHWA's finding that a partial Buy America waiver is appropriate for the obligation of Federal-aid CMAQ program funds for the purchase of eight 2012 Ford Escape hybrid four-wheel drive vehicles by Merced County, CA.

In accordance with Division A, section 123 of the ''Consolidated Appropriations Act, 2010'' (Pub. L. 111–117), the FHWA published a notice of intent to issue a waiver on its Web site for the eight 2012 Ford Escape hybrid vehicles. (*http://www.fhwa.dot.gov/construction/contracts/waivers.cfm?id=65*) on January 11th. The FHWA received eight comments in response to the publication. Two commenters objected to the proposed waiver but did not provide evidence of a domestic source that meets the appropriate requirements. One commenter questioned whether the Federal Acquisition Regulations (FAR) used by other Federal agencies for direct Federal procurement would allow for a

[1] Operating Limitations at John F. Kennedy International Airport, 73 FR 3510 (Jan. 18, 2008) as amended 76 FR 18620 (Apr. 4, 2011); Operating Limitations at Newark Liberty International Airport, 73 FR 29550 (May 21, 2008) as amended 76 FR 18618 (Apr. 4, 2011).

waiver. In response to this commenter, it is noted that the FAR is not applicable to authorizations under the Federal-aid highway program and FHWA must comply with the applicable Buy America provisions in 23 U.S.C. 313 and FHWA's implementing regulations in 23 CFR 635.410. Five of the commenters expressed partial or full support for the proposed waiver based on the belief that there are no domestic manufacturers that are able to provide a vehicle with 100 percent domestic steel and iron content. Several commenters questioned the need for this specific type of vehicle; however, Merced County's representative explained that this vehicle is necessary to meet their needs in accessing road and bridge construction sites during inclement weather while meeting the vehicle emission requirements of the CMAQ program.

During the 15-day comment period, the FHWA conducted additional review but was unable to locate a domestic manufacturer that could meet a 100 percent domestic steel and iron content requirement. Based on all the information available to the agency, the FHWA concludes that there are no domestic manufacturers that could meet a 100 percent domestic steel and iron content for the 2012 Ford Escape hybrid four-wheel drive vehicle.

The FHWA has considered Merced County's assertion that its needs for this project require a hybrid four-wheel drive vehicle and that no vehicle on the market currently satisfies a 100 percent domestic iron and steel content requirement. The FHWA has also considered the comments stating that Federal funds should be used to purchase a vehicle that is made in the United States. In considering these comments, the FHWA has reevaluated the applicability of the Buy America requirement as it may apply to the purchase of the vehicles. The FHWA's Buy America requirement was initially established in 1983 when the acquisition of vehicles was not eligible for assistance under the Federal-aid Highway Program. As such, the FHWA's Buy America requirements were tailored to the types of products that are typically used in highway construction, which generally meet a 100 percent domestic steel and iron content requirement.

Vehicles, however, are not the types of products that were initially envisioned as being purchased with Federal-aid highway funds when Buy America was first enacted. In today's global industry, vehicles are assembled with components that are made all over the world. The FHWA is not aware of any vehicle on the market that can claim to incorporate 100 percent domestic steel and iron content. For instance, the Chevy Volt, which was identified by many commenters in a November 21, 2011, Federal Register Notice as being a car that is made in the United States, comprises only 40 percent United States and Canada content according to the window sticker *http://www.cheersandgears.com/uploads/1298005091/med_gallery_51_113_449569.png*. There is no indication of how much of this 40 percent United States/Canadian content is United States-made content. Thus, the FHWA does not believe that application of a domestic content standard should be applied to the purchase of vehicles. However, the FHWA believes that the vehicles should be assembled in the United States. Whenever a person discusses the manufacture of vehicles, the discussion typically refers to where the final assembly takes place. For instance, under a previous proposed waiver notification and comment process, several commenters urged that the waiver be denied because the Chevy Volt is made in the United States. The FHWA interprets these comments as referring to the assembly of the vehicle in Detroit since the Volt window sticker says that the United States/Canada parts content of the vehicle is only 40 percent. While the manufacture of steel and iron products that are typically used in highway construction (such as pipe, rebar, struts, and beams) generally refers to the various processes that go into actually making the entire product, the manufacture of vehicles typically refers to where the vehicle is assembled. Thus, given the inherent differences in the type of products that are typically used in highway construction and vehicles, we feel that simply waiving the Buy America requirement, which is based on the domestic content of the product, without any regard to where the vehicle is assembled would diminish the purpose of the Buy America requirement. Moreover, in today's economic environment with the National unemployment rate over 8 percent, the Buy America requirement is especially significant in that it will ensure that Federal Highway Trust Fund (HTF) dollars are used to support and create jobs in the United States.

Therefore, while the FHWA has not located a vehicle that meets a 100 percent domestic iron and steel content requirement, the FHWA does not find that a complete waiver based on non-availability pursuant to 23 U.S.C. 313(b)(2) is appropriate. However, the FHWA also recognizes that at least a partial waiver is necessary in order to permit Merced County to proceed with its project. The FHWA believes that a partial waiver that allows the County to purchase vehicles so long as the final assembly of the vehicle as the end product occurs in the United States is appropriate. This approach is similar to the partial waiver given to Alameda County, CA, for the purchase of 79 electric sedans and electric vans in the November 21, 2011, **Federal Register**.

In conclusion, and in light of the above, pursuant to 23 U.S.C. 313(b)(1), the FHWA finds that it is in the public interest to grant a partial waiver from the general 100 percent domestic content requirement that applies to Federal-aid highway projects under Buy America. Under this partial waiver, however, the final assembly of any vehicles purchased with HTF funds must occur in the United States. Thus, so long as the final assembly of the 2012 Ford Escape hybrid four-wheel drive vehicles occurs in the United States, Merced County may proceed to purchase these vehicles consistent with the Buy America requirement.

In accordance with the provisions of section 117 of the SAFETEA–LU Technical Corrections Act of 2008 (Pub. L. 110–244, 122 Stat. 1572), the FHWA is providing this notice as its finding that a waiver of Buy America requirements is appropriate. The FHWA invites public comment on this finding for an additional 15 days following the effective date of the finding. Comments may be submitted to the FHWA's Web site via the link provided to the Merced County waiver page noted above.

Authority: 23 U.S.C. 313; Pub. L. 110–161, 23 CFR 635.410.

Issued on: March 21, 2012.

Victor M. Mendez,

Federal Highway Administrator.

[FR Doc. 2012–7731 Filed 3–29–12; 8:45 am]

BILLING CODE 4910–22–P

DEPARTMENT OF TRANSPORTATION

Federal Railroad Administration

[Docket Number FRA–2012–0017]

Petition for Waiver of Compliance

In accordance with Part 211 of Title 49 of the Code of Federal Regulations (CFR), this document provides the public notice that by a document dated February 7, 2012, the Savage Bingham and Garfield Railroad (SBG) has petitioned the Federal Railroad Administration (FRA) for a waiver of compliance from certain provisions of the Federal railroad safety regulations

contained at 49 CFR Section 229.23 (which requires a periodic inspection every 92 days) and 49 CFR Section 229.25 (which requires specific tests to be done at every periodic inspection).

The SBG is asking for this testing interval to be extended to 184 days. SBG conducts rail switching operations for customers in the Midvale, UT, area. For this operation, SBG runs two locomotives for fewer hours than normal Class I railroads. This relief will help SBG to lower costs and thereby be able to pass those savings on to its customers. FRA assigned the petition Docket Number FRA–2012–0017.

A copy of the petition, as well as any written communications concerning the petition, is available for review online at *www.regulations.gov* and in person at the U.S. Department of Transportation's (DOT) Docket Operations Facility, 1200 New Jersey Avenue SE., W12–140, Washington, DC 20590. The Docket Operations Facility is open from 9 a.m. to 5 p.m., Monday through Friday, except Federal Holidays.

Interested parties are invited to participate in these proceedings by submitting written views, data, or comments. FRA does not anticipate scheduling a public hearing in connection with these proceedings since the facts do not appear to warrant a hearing. If any interested party desires an opportunity for oral comment, they should notify FRA, in writing, before the end of the comment period and specify the basis for their request.

All communications concerning these proceedings should identify the appropriate docket number and may be submitted by any of the following methods:

- *Web site: http://www.regulations.gov.* Follow the online instructions for submitting comments.
- *Fax:* 202–493–2251.
- *Mail:* Docket Operations Facility, U.S. Department of Transportation, 1200 New Jersey Avenue SE., W12–140, Washington, DC 20590.
- *Hand Delivery:* 1200 New Jersey Avenue SE., Room W12–140, Washington, DC 20590, between 9 a.m. and 5 p.m., Monday through Friday, except Federal Holidays.

Communications received by May 14, 2012 will be considered by FRA before final action is taken. Comments received after that date will be considered as far as practicable.

Anyone is able to search the electronic form of any written communications and comments received into any of our dockets by the name of the individual submitting the comment (or signing the comment, if submitted on behalf of an association, business, labor union, etc.). You may review DOT's complete Privacy Act Statement in the **Federal Register** published on April 11, 2000 (Volume 65, Number 70; Pages 19477–78) or online at *http://www.dot.gov/privacy.html.*

Issued in Washington, DC, on March 26, 2012.

Ron Hynes,

Acting Deputy Associate Administrator for Regulatory and Legislative Operations.

[FR Doc. 2012–7617 Filed 3–29–12; 8:45 am]

BILLING CODE 4910–06–P

DEPARTMENT OF TRANSPORTATION

Federal Railroad Administration

[Docket Number FRA–2012–0011]

Petition for Waiver of Compliance

In accordance with part 211 of Title 49 Code of Federal Regulations (CFR), notice is hereby given that the Federal Railroad Administration (FRA) has received a request for a waiver of compliance from certain requirements of its safety standards. The individual petition is described below, including the party seeking relief, the regulatory provisions involved, the nature of the relief being requested, and the petitioner's arguments in favor of relief. The petition has been assigned Docket Number FRA–2012–0011.

Farmrail System Inc. (Farmrail), located in Clinton, OK, hereby petitions FRA for a waiver from 49 CFR 213.4(e)(3) to allow more than five cars required to be placarded by the Hazardous Materials Regulations (49 CFR part 172) to operate in a single-unit train consist. Farmrail proposes that FRA grant Farmrail a waiver of compliance that will permit more than five tank cars carrying any quantity of crude oil moving from the Anadarko Basin to operate over designated ''excepted track'' segments. The basin is located between Clinton and Sayre, OK. The 17-mile segment between Elk City and Sayre is the former Rock Island Railroad main track and currently designated as excepted track. Under this proposal, outbound loads would be metered in maximum blocks of 10 cars, while up to 20 inbound empties could be moved as they arrive (without unnecessary delay and loss of velocity); thereby relieving severe track congestion at Elk City. Farmrail claims the relief would not only improve the increasing volume of outbound traffic, but also eliminate bunching of inbound empties at the Elk City bottleneck between Class 2 and excepted track, where longer strings must now be split into five-car blocks for delivery to the different logistics customers.

Additionally, Farmrail states that a rail shipper in Sayre receives inbound loaded tank cars of methanol at a rate of approximately one or two cars per month. Methanol is a hazardous material. Under this proposal, a loaded car of methanol would displace one empty car of crude oil, and an empty tank car of methanol would displace one loaded car of crude oil. A train leaving Elk City for Sayre would be permitted to have up to 19 empty crude oil cars and one loaded methanol car. Similarly, a train leaving Sayre for Elk City could have 9 loaded crude oil cars and one empty methanol car.

Farmrail states that they have experienced no line-haul derailments between Elk City and Sayre on the 100-pound former mainline rail at 10 mph. Farmrail has installed new ties where there is curvature, so the safety risk for empty tank cars in this extremely rural environment is minimal. Public benefits from issuance of the requested regulatory waiver would include a potential 50-percent reduction in the number of train movements required to move available traffic and associated grade crossing accident exposure. Farmrail train crews have had emergency response and hazmat training, and their operating practices are randomly monitored by a field compliance supervisor. Farmrail proposes to conduct twice-weekly hi-rail inspections of the subject track segment until it can be reclassified.

Additionally, Farmrail states that they are the recipients of the Transportation Investment Generating Economic Recovery or TIGER III grant funds for the rehabilitation of 49 miles of rail line in western Oklahoma to sound Class 2 safety standards. The Clinton-to-Sayre segment is critical to the origination of rapidly growing volumes of crude oil produced from the Anadarko Basin oil and gas reserves. The $8.4 million-track project, sponsored by the Oklahoma Department of Transportation (ODOT), includes 20 percent in local matching funds and an indicated benefit-cost factor of 56.8, as posted by ODOT on its Web site *www.odot.gov.*

Interested parties are invited to participate in these proceedings by submitting written views, data, or comments. FRA does not anticipate scheduling a public hearing in connection with these proceedings since the facts do not appear to warrant a hearing. If any interested party desires an opportunity for oral comment, they should notify FRA, in writing, before the end of the comment period and specify the basis for their request.

All communications concerning these proceedings should identify the appropriate docket number (*e.g.,* Waiver Petition Docket Number FRA–2012–0011) and may be submitted by any of the following methods:

• *Web site: http://www.regulations.gov.* Follow the online instructions for submitting comments.

• *Fax:* 202–493–2251.

• *Mail:* Docket Operations Facility, U.S. Department of Transportation, 1200 New Jersey Avenue SE., W12–140, Washington, DC 20590.

• *Hand Delivery:* 1200 New Jersey Avenue SE., Room W12–140, Washington, DC 20590, between 9 a.m. and 5 p.m., Monday through Friday, except Federal Holidays.

Communications received within 30 days of the date of this notice will be considered by FRA before final action is taken. Comments received after that date will be considered as far as practicable. All written communications concerning these proceedings are available for examination during regular business hours (9 a.m.–5 p.m.) at the above facility. All documents in the public docket are also available for inspection and copying on the Internet at the docket facility's Web site at *http://www.regulations.gov.*

Anyone is able to search the electronic form of any written communications and comments received into any of our dockets by the name of the individual submitting the document (or signing the document, if submitted on behalf of an association, business, labor union, etc.). You may review the U.S. Department of Transportation's complete Privacy Act Statement in the **Federal Register** published on April 11, 2000 (65 FR 19477), or at *http://www.dot.gov/privacy.html.*

Dated: Issued in Washington, DC, on March 26, 2012.

Ron Hynes,

Acting Deputy Associate Administrator for Regulatory and Legislative Operations.

[FR Doc. 2012–7618 Filed 3–29–12; 8:45 am]

BILLING CODE 4910–06–P

DEPARTMENT OF TRANSPORTATION

Federal Railroad Administration

[Docket Number FRA–2012–0021]

Petition for Waiver of Compliance

In accordance with part 211 of Title 49 of the Code of Federal Regulations (CFR), this document provides the public notice that by a document dated February 14, 2012, Columbia Business Center Railroad (CBCX) has petitioned the Federal Railroad Administration (FRA) for a waiver of compliance from certain provisions of the Federal hours of service laws contained at 49 U.S.C. 21103(a)(4). FRA assigned the petition docket number FRA–2012–0021.

In its petition, CBCX seeks relief from 49 U.S.C. 21103(a)(4), which, in part, requires a train employee to receive 48 hours off duty after initiating an on-duty period for 6 consecutive days. Specifically, CBCX seeks a waiver to allow a train employee to initiate an on-duty period for 6 consecutive days followed by 24 hours off-duty. In support of its request, CBCX submitted documents demonstrating employee support and a description of employee work schedules.

A copy of the petition, as well as any written communications concerning the petition, is available for review online at *www.regulations.gov* and in person at the U.S. Department of Transportation's (DOT) Docket Operations Facility, 1200 New Jersey Avenue SE., W12–140, Washington, DC 20590. The Docket Operations Facility is open from 9 a.m. to 5 p.m., Monday through Friday, except Federal Holidays.

Interested parties are invited to participate in these proceedings by submitting written views, data, or comments. FRA does not anticipate scheduling a public hearing in connection with these proceedings since the facts do not appear to warrant a hearing. If any interested party desires an opportunity for oral comment, they should notify FRA, in writing, before the end of the comment period and specify the basis for their request.

All communications concerning these proceedings should identify the appropriate docket number and may be submitted by any of the following methods:

• *Web site: http://www.regulations.gov.* Follow the online instructions for submitting comments.

• *Fax:* 202–493–2251.

• *Mail:* Docket Operations Facility, U.S. Department of Transportation, 1200 New Jersey Avenue SE., W12–140, Washington, DC 20590.

• *Hand Delivery:* 1200 New Jersey Avenue SE., Room W12–140, Washington, DC 20590, between 9 a.m. and 5 p.m., Monday through Friday, except Federal Holidays.

Communications received by May 14, 2012 will be considered by FRA before final action is taken. Comments received after that date will be considered as far as practicable.

Anyone is able to search the electronic form of any written communications and comments received into any of our dockets by the name of the individual submitting the comment (or signing the comment, if submitted on behalf of an association, business, labor union, *etc.*). You may review DOT's complete Privacy Act Statement in the **Federal Register** published on April 11, 2000 (Volume 65, Number 70; Pages 19477–78) or online at *http://www.dot.gov/privacy.html.*

Dated: Issued in Washington, DC, on March 26, 2012.

Ron Hynes,

Acting Deputy Associate Administrator for Regulatory and Legislative Operations.

[FR Doc. 2012–7611 Filed 3–29–12; 8:45 am]

BILLING CODE 4910–06–P

DEPARTMENT OF TRANSPORTATION

Federal Railroad Administration

[Docket Number FRA–2012–0023]

Petition for Waiver of Compliance

In accordance with Part 211 of Title 49 Code of Federal Regulations (CFR), this document provides the public notice that by a document dated January 25, 2012, Union Pacific Railroad (UP) has petitioned the Federal Railroad Administration (FRA) for a permanent waiver of compliance from certain provisions of the *Locomotive Safety Standards,* found at 49 CFR 229.129(b) and (c), and which pertain to railroad locomotive horn testing. FRA assigned the petition Docket Number FRA–2012–0023.

UP seeks to use an automated sound measurement system (ASMS) to test locomotive horns as required in 49 CFR 229.129(b). The ASMS uses a Class 1 sound-level measuring instrument that is permanently mounted in a fixed test site and uses the same technology that is used to measure noise at airports nationwide. Due to the proven accuracy and reliability of the ASMS and the tight procedural control and concise documentation they provide (plus the fact that the frequency and duration of horn blasts and the resulting impact on the surrounding community and personnel is reduced), UP strongly believes that the ASMS is an improvement from the current testing scheme permitted under 49 CFR 229.129.

In addition, UP requests a waiver to extend the duration between acoustic calibrations (49 CFR 229.129(c)(9)) from immediately before and after each session of compliance tests, or no later than 8 hours, as clarified in 71 FR 47626, to a period of no more than 6 months.

UP also requests FRA approval of all locomotive horn test data acquired by any of UP's ASMS that meet the requirements of SAE ARP–4 721, and have been calibrated in accordance with this waiver.

A copy of the petition, as well as any written communications concerning the petition, is available for review online at *http://www.regulations.gov* and in person at the U.S. Department of Transportation's (DOT) Docket Operations Facility, 1200 New Jersey Avenue SE., W12–140, Washington, DC 20590. The Docket Operations Facility is open from 9 a.m. to 5 p.m., Monday through Friday, except Federal Holidays.

Interested parties are invited to participate in these proceedings by submitting written views, data, or comments. FRA does not anticipate scheduling a public hearing in connection with these proceedings since the facts do not appear to warrant a hearing. If any interested party desires an opportunity for oral comment, they should notify FRA, in writing, before the end of the comment period and specify the basis for their request.

All communications concerning these proceedings should identify the appropriate docket number (e.g., Waiver Petition Docket Number FRA–2012–0023) and may be submitted by any of the following methods:

- *Web site: http://www.regulations.gov.* Follow the online instructions for submitting comments.
- *Fax:* 202–493–2251.
- *Mail:* Docket Operations Facility, U.S. Department of Transportation, 1200 New Jersey Avenue SE., W12–140, Washington, DC 20590.
- *Hand Delivery:* 1200 New Jersey Avenue SE., Room W12–140, Washington, DC 20590, between 9 a.m. and 5 p.m., Monday through Friday, except Federal Holidays.

Communications received by May 14, 2012 will be considered by FRA before final action is taken. Comments received after that date will be considered as far as practicable.

Anyone is able to search the electronic form of any written communications and comments received into any of our dockets by the name of the individual submitting the comment (or signing the comment, if submitted on behalf of an association, business, labor union, etc.). You may review DOT's complete Privacy Act Statement in the **Federal Register** published on April 11, 2000 (Volume 65, Number 70; Pages 19477–78), or online at *http://www.dot.gov/privacy.html.*

Issued in Washington, DC, on March 26, 2012.

Ron Hynes,

Acting Deputy Associate Administrator for Regulatory and Legislative Operations.

[FR Doc. 2012–7614 Filed 3–29–12; 8:45 am]

BILLING CODE 4910–06–P

DEPARTMENT OF TRANSPORTATION

Pipeline and Hazardous Materials Safety Administration

[Docket ID PHMSA–2012–0021]

Pipeline Safety: Public Comment on Leak and Valve Studies Mandated by the Pipeline Safety, Regulatory Certainty, and Job Creation Act of 2011

AGENCY: Pipeline and Hazardous Materials Safety Administration (PHMSA), DOT.

ACTION: Notice of Public Comment.

SUMMARY: The Department of Transportation (DOT), Pipeline and Hazardous Materials Safety Administration (PHMSA) is providing an important opportunity through this notice for all stakeholders to publically comment on the scope of recently commissioned studies involving leak detection systems and valves. This action and others described within this notice will support the comprehensive investigation of topics and issues Congress has charged to PHMSA.

DATES: PHMSA must have all comments submitted by close of business April 30, 2012.

ADDRESSES: Comments should reference Docket No. PHMSA–2012–0021 and may be submitted in the following ways:

- *E–Gov Web Site: http://www.Regulations.gov.* This site allows the public to enter comments on any **Federal Register** notice issued by any agency.
- *Fax:* 1–202–493–2251.
- *Mail:* DOT Docket Management System: U.S. DOT, Docket Operations, M–30, West Building Ground Floor, Room W12–140, 1200 New Jersey Avenue SE., Washington, DC 20590–0001.
- *Hand Delivery:* U.S. DOT Docket Management System; West Building Ground Floor, Room W12–140, 1200 New Jersey Avenue SE., Washington, DC 20590–0001 between 9 a.m. and 5 p.m., Monday through Friday, except Federal holidays.

Instructions: You should identify the Docket No. PHMSA–2012–0021 at the beginning of your comments. If you submit your comments by mail, submit two copies. To receive confirmation that PHMSA received your comments, include a self-addressed stamped postcard. Internet users may submit comments at *http://www.regulations.gov.*

Note: Comments are posted without changes or edits to *http://www.regulations.gov,* including any personal information provided. There is a privacy statement published on *http://www.regulations.gov.*

Any technically substantive comments received after the comment closing date will be considered to the extent practicable.

FOR FURTHER INFORMATION CONTACT: Contact Max Kieba at 202–493–0595 or Email: *max.kieba@dot.gov* for questions regarding the leak detection study. Contact Patrick Landon at 202–695–0798 or Email: *patrick.landon@dot.gov* for questions regarding the valve study.

Background: The recent passage of the Pipeline Safety, Regulatory Certainty, and Job Creation Act of 2011 has called for several commissioned studies and reports to Congress that PHMSA must address and complete. Further, PHMSA is also evaluating how to address several concerns raised by recent National Transportation Safety Board recommendations.

PHMSA has commissioned two studies to gather facts and perform technical, operational, and economical analyses about the constraints and implications for expanding the uses of leak detection systems and automatic and remote controlled valves. PHMSA believes that the scope of these studies should have a wide stakeholder review and input and seeks public input through two venues.

First is the public workshop on Improving Pipeline Leak Detection System Effectiveness and Understanding the Application of Automatic/Remote Control Valves on March 27–28, 2012. This workshop will examine how to encourage operators to expand usage of leak detection systems (LDS) and improve system effectiveness on the Nation's pipeline infrastructure and how remote control and automatic control valves can be installed to lessen the volume of natural gas and hazardous liquid released during catastrophic pipeline events. These public meetings are designed to provide an open forum for exchanging information on the challenges associated with LDS and automatic/remote control valves.

Second is the opportunity for all stakeholders to publically comment on the scope of these two studies. This notice was designed to do just that. The following sections identify what Congress has mandated in these studies

and the scope of work PHMSA has factored into each study.

Leak Detection Study

The Congress included the following language from the Act related to the leak detection study:

''SEC. 8. LEAK DETECTION.

(a) LEAK DETECTION REPORT.—

(1) IN GENERAL.—Not later than 1 year after the date of enactment of this Act, the Secretary of Transportation shall submit to the Committee on Commerce, Science, and Transportation of the Senate and the Committee on Transportation and Infrastructure and the Committee on Energy and Commerce of the House of Representatives a report on leak detection systems utilized by operators of hazardous liquid pipeline facilities and transportation-related flow lines.

(2) CONTENTS.—The report shall include—

(A) An analysis of the technical limitations of current leak detection systems, including the ability of the systems to detect ruptures and small leaks that are ongoing or intermittent, and what can be done to foster development of better technologies; and

(B) An analysis of the practicability of establishing technically, operationally, and economically feasible standards for the capability of such systems to detect leaks, and the safety benefits and adverse consequences of requiring operators to use leak detection systems.''

PHMSA has commissioned a leak detection study containing the following work scope:

Task 1—Kickoff Meeting

A kickoff meeting will be held via webinar or phone call to review the scope of the project.

Task 2—Attendance at Public Workshop

The contractor will attend PHMSA's *Improving Pipeline Leak Detection System Effectiveness Public Workshop* on March 27, 2012. Any public input from that workshop will be considered for any potential modifications of the scope of work and when developing the final report.

Task 3—Review and Assess Previous Pipeline Incidents

PHMSA will provide access to its pipeline incident data. The contractor will examine past pipeline incidents and consider any non-PHMSA datasets that may provide useful insight and analysis to meet project objectives. This evaluation will help determine whether implementation of further leak detection capabilities would have mitigated effects to the public and surrounding environment. The contractor will use standard fire science practices to perform the risk analysis to property, public, and the environment. This evaluation will also help determine the level of protection needed for adequate mitigation.

Task 4—Technological Feasibility

The contractor will compare all methods to determine whether current systems (or multiple systems) are able to adequately protect the public and the environment from pipeline leaks or incidents. The contractor is to look at legacy equipment currently utilized by operators, their ability to retrofit, and all benefits and drawbacks of all methods. The contractor is to consider the method/systems ability to detect small/intermittent leaks and identify and explain any technology gaps.

Task 5—Operational Feasibility

The contractor will analyze leak detection methods and systems that are currently being used throughout the industry. This task includes defining and categorizing leak detection methods and systems that range from visual inspection techniques, instrumented monitoring of internal pipeline conditions, and external instrumentation for detecting leaked hydrocarbons. This task includes a view of how many operators are adequately protecting their infrastructure with leak detection systems, and an analysis of operational aspects (*i.e.* procedures, protocols, best practices, workforce, etc.). The contractor will consider reliability, availability and maintainability of system aspects and analyze how further leak detection methods/system deployment would affect pipeline operations.

Task 6—Economical Feasibility

The contractor will perform a cost benefit analysis for deploying leak detection systems on new and existing pipeline systems. The cost benefit will determine the lifetime operational cost of the system and take into account the benefit that may be seen by the public and surrounding environment over the anticipated life cycle of the individual leak detection systems. The analysis will focus on the entire pipeline infrastructure with a separate analysis to include pipelines in high consequence areas (HCAs) only. Damage to surrounding environment/public must utilize standard fire science practices.

Task 7—Analyze Leak Detection Standards

The contractor is to analyze the practicability of establishing technically, operationally, and economically feasible leak detection standards to provide adequate protection to the Nation against pipeline leaks, if such standards don't already exist. The analysis should be specific to the type of pipeline (gas distribution, gas transmission, hazardous liquid pipeline facilities, transportation-related flow lines, etc.) and consider pipeline locations (*i.e.,* Class Locations, HCAs, non-HCAs, etc.).

The deliverable from this study will embody the supporting information reported to Congress starting in December 2012, and will be publically available from PHMSA's Web site at *http://www.phmsa.dot.gov/pipeline/library.*

Automatic and Remote-Controlled Shut-Off Valves

Congress included the following language from the Act related to the valve study:

''SEC. 4. AUTOMATIC AND REMOTE-CONTROLLED SHUT-OFF VALVES.

Section 60102 is amended—

(1) *By striking subsection (j)(3); and*

(2) *By adding at the end the following:*

(n) *Automatic and Remote-Controlled Shut-OFF Valves for New Transmission Pipelines.—*

(1) IN GENERAL.—Not later than 2 years after the date of enactment of this subsection, and after considering the factors specified in subsection (b)(2), the Secretary, if appropriate, shall require by regulation the use of automatic or remote-controlled shut-off valves, or equivalent technology, where economically, technically, and operationally feasible on transmission pipeline facilities constructed or entirely replaced after the date on which the Secretary issues the final rule containing such requirement.

(2) HIGH-CONSEQUENCE AREA STUDY.—

(A) STUDY.—The Comptroller General of the United States shall conduct a study on the ability of transmission pipeline facility operators to respond to a hazardous liquid or gas release from a pipeline segment located in a high-consequence area.

(B) CONSIDERATIONS.—In conducting the study, the Comptroller General shall consider the swiftness of leak detection and pipeline shutdown capabilities, the location of the nearest response personnel, and the costs, risks, and benefits of installing automatic and remote-controlled shut-off valves.

(C) REPORT.—Not later than 1 year after the date of enactment of this subsection, the Comptroller General shall submit to the Committee on Transportation and Infrastructure and the Committee on Energy and Commerce of the House of Representatives and the Committee on Commerce, Science, and Transportation of the Senate a report on the results of the study.''

PHMSA has commissioned a study on the requirements of automatic and remote-controlled shut-off valves that cover natural gas and hazardous liquid lines containing the following work scope:

Task 1: Kickoff Meeting

A kickoff meeting will be held via webinar or phone call to review the scope of the project.

Task 2: Attend Public Workshop

The contractor will attend PHMSA's *Understanding the Application of Automatic Control and Remote Control Valves* public workshop on March 28, 2012. The contractor will review and provide feedback on any result from the workshop. The feedback should be incorporated into the tasked studies. This can potentially lead to a modification of scope and costs if warranted

Task 3: Required Study on Automatic and Remote-Controlled Shut-off Valves on HCAs and Class 3 and Class 4 Areas on Natural Gas Pipelines

The contractor will conduct a study on the ability of transmission pipeline facility operators to respond to a hazardous liquid or gas release from a pipeline segment located in a HCA. This study will evaluate Class 3 and Class 4 areas of natural gas transmission pipelines.

The contractor must analyze the technical and operational ability of the swiftness of the existing leak detection system and the operator's capability to shut down the affected pipeline, and consider upstream and downstream controls, automation, supervisory control and data acquisition systems, and valve spacing. Also to be discussed are human factors of response, specifically, what is the minimum response time and the nearest required human to initiate isolation of the pipeline?

The contractor must perform a cost benefit analysis for installing automatic and remote controlled shut-off valves in HCAs and for gas transmission Class 3 and Class 4 areas. The cost benefit must determine the lifetime operational cost of the system and take into account the benefit that may be seen by the public and surrounding environment. Analysis should include the economic impact of damage to surrounding environment/public and utilize standard fire science practices to derive the result.

The contractor will perform a risk analysis of installing automatic and remote controlled shut-off valves as compared to local manual operation of isolation valves on transmission pipelines. The contractor will use standard fire science practices to perform the risk analysis that will analyze the risk to property, the public, and the environment.

The contractor is to analyze and discuss the benefits to the public and the environment of a requirement to install automatic and remote controlled shut-off valves within HCAs and Class 3 and Class 4 areas.

Task 4: Required Study on Automatic and Remote Controlled Shut-Off Valves on Newly Constructed or Entirely Replaced Facilities

The contractor is to study the use of automatic or remote controlled shut-off valves in newly- constructed and entirely replaced facilities constructed after January 2012. This study should address the economical, technical and operational feasibility of this requirement. The following points should be incorporated into the study.

Economic Feasibility

The contractor will perform a cost benefit analysis for installing automatic and remote controlled shut-off valves on new and entirely replaced pipeline systems. This cost benefit will determine the lifetime operational cost of the system and take into account the benefit that may be seen by the public and surrounding environment over the anticipated life cycle of automatic and remote controlled shut-off valves installed. Analysis should include the economic impact of damage to the surrounding environment/public and utilize standard fire science practices to derive the result.

Technical Feasibility

The contractor is to compare all types of automatic and remote controlled shut-off valves and determine whether available technologies can adequately protect the public and environment from pipeline leaks and incidents through rapid closure, and discuss benefits and drawbacks of all methods. Giving special consideration to the method/systems ability to detect and react to small/intermittent leaks, the contractor is to identify and explain any technology gaps and analyze any technological shortfalls specific to automatic shut-off valves' reliability. Modeling of rapid closure of valves will utilize standard fire science practices to establish benchmarks for technical feasibility. The contractor is also to determine if there are alternative technologies to automatic and remote controlled shut-off valves and investigate and explain these technologies.

Operational Feasibility

The contractor will review and summarize DOT's current regulations addressing the installation of automatic and remote controlled shut-off valves. This review will be for hazardous liquid and natural gas pipelines and determine how operators are currently complying with them. The contractor will analyze operational aspects (i.e. procedures, protocols, best practices, workforce, etc.) and discuss reliability, availability and maintainability of these systems. The contractor will analyze how automatic and remote controlled shut-off valve installation would affect pipeline operations. Also, the contractor will consider how emergency first responders should be addressed in the operational feasibility study.

Task 5—Review and Assess Previous Pipeline Incidents

PHMSA will provide access to pipeline incident data. The contractor will examine past pipeline incidents to determine whether installation of either automatic or remote controlled shut-off valves would have mitigated effects to the public and surrounding environment. The contractor will use standard fire science practices to perform the risk analysis to property, the public, and the environment.

The deliverable from this study will embody the supporting information reported to Congress starting in December 2012, and will be publically available on PHMSA's Web site at *http://www.phmsa.dot.gov/pipeline/library.*

Any individual or organization can submit comments on any of these commissioned studies. However, there are time constraints to reporting to Congress. In order to meet the time constraints, PHMSA must have all comments submitted by close of business April 30, 2012.

Some key questions for your consideration are:

Is PHMSA's commissioned work scope adequate for supporting a comprehensive report to Congress?

If not, what additional or revised work scope actions should PHMSA consider?

Is there a related technical report publically available that these studies should review?

Dated: Issued in Washington, DC, on March 26, 2012.

Linda Daugherty,

Deputy Associate Administrator for Policy and Programs.

[FR Doc. 2012–7729 Filed 3–29–12; 8:45 am]

BILLING CODE 4910–60–P

DEPARTMENT OF TRANSPORTATION

Surface Transportation Board

[Docket No. FD 35390]

Affton Terminal Railroad Company—Operation Exemption[1]—Affton Trucking Company

Affton Terminal Railroad Company (ATRR), a noncarrier, has filed a verified notice of exemption [2] under 49 CFR 1150.31 to operate, pursuant to an agreement with Affton Trucking Company (ATC),[3] approximately 2.0 miles of railroad right-of-way and trackage and transloading facilities in St. Louis, Mo. (the Line).

According to ATRR, there are no mileposts associated with the trackage, which is located at ATC's transloading facility in St. Louis. ATRR states that the trackage is used in conjunction with interchanging outbound carloads of grains and related products as well as plastic pellets and related products with the Terminal Railroad Association of St. Louis and BNSF Railway Company and inbound carloads for transloading into trucks for final delivery. ATRR also states that there are plans to phase in additional trackage that ATRR will operate.

ATRR asserts that because the trackage in question will constitute the entire line of railroad of ATRR, this trackage is a line of railroad under 49 U.S.C. 10901, rather than spur, switching or side tracks excepted from Board operation authority by virtue of 49 U.S.C. 10906.[4]

The transaction may not be consummated until April 19, 2012 (30 days after the notice of exemption was filed).[5]

ATRR certifies that its projected annual revenues as a result of this transaction will not exceed levels that will qualify it as a Class III rail carrier.

If the verified notice contains false or misleading information, the exemption is void *ab initio.* Petitions to revoke the exemption under 49 U.S.C. 10502(d) may be filed at any time. The filing of a petition to revoke will not automatically stay the effectiveness of the exemption. Petitions to stay must be filed no later than April 12, 2012 (at least seven days before the exemption becomes effective).

An original and 10 copies of all pleadings, referring to Docket No. FD 35390, must be filed with the Surface Transportation Board, 395 E Street SW., Washington, DC 20423–0001. In addition, a copy of each pleading must be served on David C. Dillon, Dillon & Nash, Ltd., Suite 719, 111 West Washington Street, Chicago, IL 60602.

Board decisions and notices are available on our Web site at *www.stb.dot.gov.*

Decided: March 27, 2012.

By the Board.

Rachel D. Campbell,

Director, Office of Proceedings.

Raina S. White,

Clearance Clerk.

[FR Doc. 2012–7696 Filed 3–29–12; 8:45 am]

BILLING CODE 4915–01–P

[1] This proceeding originally was captioned as an ''acquisition'' exemption, but the described transaction, as clarified, involves only an operating agreement. The proceeding has been re-captioned accordingly.

[2] ATRR initially filed its verified notice of exemption on November 25, 2011. On December 16, 2011, ATRR filed a request that its notice of exemption be held in abeyance until further notice, which the Board granted by decision served on December 20, 2011. ATRR filed an amended verified notice on March 2, 2012, and a letter supplementing and clarifying its amended verified notice on March 20, 2012.

[3] A copy of the operating agreement was submitted with the notice of exemption. *See Anthony Macrie—Continuance in Control Exemption—N.J. Seashore Lines, Inc.,* FD 35296, slip op. at 3–4 (STB served Aug. 31, 2010).

[4] *See Effingham R.R.—Pet. for Declaratory Order—Constr. at Effingham, IL,* NOR 41986 *et al.* (STB served Sept. 18, 1998), *aff'd sub nom. United Transp. Union-Ill. Legislative Bd.* v. *STB,* 183 F.3d 606 (7th Cir. 1999).

[5] ATRR's verified notice of exemption is deemed to have been filed on March 20, 2012, the date ATRR filed its latest supplement.

DEPARTMENT OF THE TREASURY

Submission for OMB Review; Comment Request

March 28, 2012.

The Department of the Treasury will submit the following information collection request to the Office of Management and Budget (OMB) for review and clearance in accordance with the Paperwork Reduction Act of 1995, Public Law 104–13, on or after the date of publication of this notice.

DATES: Comments should be received on or before April 30, 2012 to be assured of consideration.

ADDRESSES: Send comments regarding the burden estimate, or any other aspect of the information collection, including suggestion for reducing the burden, to the (1) Office of Information and Regulatory Affairs, Office of Management and Budget, Attention: Desk Officer for Treasury, New Executive Office Building, Room 10235, Washington, DC 20503, or email at *OIRA_Submission@OMB.EOP.GOV* and to the (2) Treasury PRA Clearance Officer, 1750 Pennsylvania Ave. NW., Suite 11020, Washington, DC 20220, or on-line at *www.PRAComment.gov.*

FOR FURTHER INFORMATION CONTACT: Copies of the submission(s) may be obtained by calling (202) 927–5331, email at *PRA@treasury.gov,* or the entire information collection request maybe found at *www.reginfo.gov.*

Alcohol and Tobacco Tax and Trade Bureau (TTB)

OMB Number: 1513–0020.

Type of Review: Revision of a currently approved collection.

Title: Application for and Certification/Exemption of Label/Bottle Approval.

Form: TTB F 5100.31.

Abstract: The Federal Alcohol Administration Act requires the labeling of alcohol beverages and designates the Treasury Department to oversee compliance with regulations. This form is completed by the regulated industry members and submitted to TTB as an application to label their products. TTB oversees label applications to prevent consumer deception and to deter falsification of unfair advertising practices on alcohol beverages.

Affected Public: Private Sector: Businesses or other for-profits.

Estimated Total Burden Hours: 67,566.

Dawn D. Wolfgang,

Treasury PRA Clearance Officer.

[FR Doc. 2012–7792 Filed 3–29–12; 8:45 am]

BILLING CODE 4810–31–P

DEPARTMENT OF THE TREASURY

Office of the Comptroller of the Currency

[Docket ID OCC–2011–0028]

FEDERAL RESERVE SYSTEM

[OP–1439]

FEDERAL DEPOSIT INSURANCE CORPORATION

Proposed Guidance on Leveraged Lending

AGENCY: Office of the Comptroller of the Currency, Treasury (''OCC''); Board of Governors of the Federal Reserve System (''Board'' or ''Federal Reserve''); and the Federal Deposit Insurance Corporation (''FDIC'').

ACTION: Proposed joint guidance with request for public comment.

SUMMARY: The OCC, Board, and the FDIC (collectively, the Agencies) request comment on proposed guidance on leveraged lending (proposed guidance).

The proposed guidance outlines high-level principles related to safe and sound leveraged lending activities, including underwriting considerations, assessing and documenting enterprise value, risk management expectations for credits awaiting distribution, stress testing expectations and portfolio management, and risk management expectations. This proposed guidance would apply to all Federal Reserve-supervised, FDIC-supervised, and OCC-supervised financial institutions substantively engaged in leveraged lending activities. The number of community banking organizations with substantial exposure to leveraged lending is very small; therefore the Agencies generally expect that community banking organizations largely would be unaffected by this guidance.

DATES: Comments must be submitted on or before June 8, 2012.

ADDRESSES:

OCC

Please use the title ''Proposed Leveraged Lending Guidance'' to facilitate the organization and distribution of the comments. You may submit comments by any of the following methods:

- *Email: regs.comments@occ.treas.gov.*
- *Mail:* Office of the Comptroller of the Currency, 250 E Street SW., Mail Stop 2–3, Washington, DC 20219.
- *Fax:* (202) 874–5274.
- *Hand Delivery/Courier:* 250 E Street SW., Mail Stop 2–3, Washington, DC 20219.

Instructions: You must include ''OCC'' as the agency name and ''Docket Number OCC–2011–0028'' in your comment. In general, OCC will enter all comments received into the docket and publish them on the Regulations.gov Web site without change, including any business or personal information that you provide such as name and address information, email addresses, or phone numbers. Comments received, including attachments and other supporting materials, are part of the public record and subject to public disclosure. Do not enclose any information in your comment or supporting materials that you consider confidential or inappropriate for public disclosure.

You may review comments and other related materials that pertain to this notice by any of the following methods:

- *Viewing Comments Personally:* You may personally inspect and photocopy comments at the OCC, 250 E Street SW., Washington, DC. For security reasons, the OCC requires that visitors make an appointment to inspect comments. You may do so by calling (202) 874–4700. Upon arrival, visitors will be required to present valid government-issued photo identification and to submit to security screening in order to inspect and photocopy comments.
- *Docket:* You may also view or request available background documents and project summaries using the methods described above.

Board

When submitting comments, please consider submitting your comments by email or fax because paper mail in the Washington, DC, area and at the Board may be subject to delay. You may submit comments, identified by Docket No. OP–1439, by any of the following methods:

- *Agency Web Site: http://www.federalreserve.gov.* Follow the instructions for submitting comments at *http://www.federalreserve.gov/generalinfo/foia/ProposedRegs.cfm.*
- *Federal eRulemaking Portal: http://www.regulations.gov.* Follow the instructions for submitting comments.
- *Email: regs.comments@federalreserve.gov.* Include docket number in the subject line of the message.
- *FAX:* (202) 452–3819 or (202) 452–3102.
- *Mail:* Jennifer J. Johnson, Secretary, Board of Governors of the Federal Reserve System, 20th Street and Constitution Avenue NW., Washington, DC 20551.

All public comments are available from the Board's Web site at *http://www.federalreserve.gov/generalinfo/foia/ProposedRegs.cfm* as submitted, unless modified for technical reasons. Accordingly, your comments will not be edited to remove any identifying or contact information. Public comments may also be viewed electronically or in paper form in Room MP–500 of the Board's Martin Building (20th and C Street NW., Washington, DC 20551) between 9 a.m. and 5 p.m. on weekdays.

FDIC: You may submit comments by any of the following methods:

- *Agency Web site: http://www.FDIC.gov/regulations/laws/federal/propose.html.* Follow the instructions for submitting comments.
- *Federal eRulemaking Portal: http://www.regulations.gov.* Follow the instructions for submitting comments.
- *Email: comments@FDIC.gov.* Include ''Leveraged Lending Guidance'' in the subject line of the message. Comments received will be posted without change to *http://www.FDIC.gov/regulations/laws/federal/propose.html,* including any personal information provided.
- *Mail:* Robert E. Feldman, Executive Secretary, Attention: Comments/Legal ESS, Federal Deposit Insurance Corporation, 550 17th Street NW., Washington, DC 20429.
- *Hand Delivery/Courier:* Guard station at the rear of the 550 17th Street Building (located on F Street), on business days between 7 a.m. and 5 p.m. (EDT).

FOR FURTHER INFORMATION CONTACT:

OCC: Louise Francis, Commercial Credit Technical Expert, 202–874–5170, 250 E Street SW., Washington, DC 20219.

Board: Lawrence A. Rufrano, Senior Financial Analyst, (202) 452–2808, Mary Aiken, Manager, Risk Policy, (202) 452–2904, or Benjamin W. McDonough, Senior Counsel, (202) 452–2036, Legal Division, Board of Governors of the Federal Reserve System, 20th and C Streets NW., Washington, DC 20551.

FDIC: William R. Baxter, Senior Examination Specialist, 202–898–8514, *wbaxter@fdic.gov,* 550 17th Street NW., Washington, DC 20429.

SUPPLEMENTARY INFORMATION:

I. Background

All financial institutions [1] should have the capacity to properly evaluate and monitor underwritten credit risks, to understand the effect of changes in borrowers' enterprise values upon credit portfolio quality, and to assess the sensitivity of future credit losses to changes in enterprise values. Further, in underwriting such credits, institutions need to ensure that borrowers are able to repay credit as due and at the same time that borrowers have capital structures, including their bank borrowings and other debt, that support the borrower's continued operations through economic cycles (that is, have a sustainable capital structure). Institutions should also be able to demonstrate that they understand their risks and the potential impact of stressful events and circumstances on borrowers' financial condition. The Agencies have previously provided guidance to financial institutions for their involvement in leveraged lending. The recent financial crisis further underscored the need for banking organizations to employ sound

[1] For purposes of this guidance, the term ''financial institution'' means national banks, federal savings associations, and Federal branches and agencies supervised by the OCC; state member banks, bank holding companies, and all other institutions for which the Federal Reserve is the primary federal supervisor; and state nonmember insured banks and other institutions supervised by the FDIC.

underwriting, to ensure that the risks in leveraged lending activities are appropriately incorporated in the Allowance for Loan and Lease Losses and capital adequacy analyses, to monitor the sustainability of their borrowers' capital structures, and to incorporate stress testing into their risk management of both leveraged portfolios and distribution pipelines, as banking organizations unprepared for stressful events and circumstances can suffer acute threats to their financial condition and viability. The proposed guidance is intended to be consistent with industry practices while building upon the recently proposed guidance on Stress Testing.[2]

II. Principal Elements of the Proposed Guidance

In April 2001, the Agencies (and Office of Thrift Supervision) issued guidance[3] regarding sound practices for leveraged finance[4] activities (2001 Guidance). The 2001 Guidance addressed expectations for the content of credit policies, the need for well-defined underwriting standards, the importance of defining an institution's risk appetite for leveraged transactions, and the importance of stress testing exposures and portfolios.

Since the issuance of that guidance, the Agencies have observed tremendous growth in the volume of leveraged credit and in the participation of non-regulated investors. As the market has grown, debt agreements have frequently included features that provided relatively limited lender protection, including the absence of meaningful maintenance covenants in loan agreements and the inclusion of payment-in-kind (PIK)-toggle features in junior capital instruments (i.e., a feature where the borrower has the option to pay interest in cash or in-kind, which increases the principal owed), both of which lessen lenders' recourse in the event that a borrower's performance does not meet projections. Further, the capital structures and repayment prospects for some transactions, whether originated to hold or distribute, have at times been aggressive in light of the overall risk of the credit.

Absent meaningful limits and to support burgeoning demand from institutional investors, the pipeline of aggressively priced and structured commitments has grown rapidly. Further, management information systems (MIS) at some institutions have proven less than satisfactory in accurately aggregating exposures on a timely basis, and many institutions have found themselves holding large pipelines of higher-risk commitments at a time when buyer demand for risky assets diminished significantly.

In light of these changes, the Agencies have decided to replace the 2001 Guidance with new leveraged finance guidance (proposed guidance). The proposed guidance describes expectations for the sound risk management of leveraged finance activities, including the importance of institutions developing and maintaining:

- Transactions that are structured to reflect a sound business premise, an appropriate capital structure, and reasonable cash flow and balance sheet leverage. Combined with supportable performance projections, these considerations should clearly support a borrower's capacity to repay and de-lever to a sustainable level over a reasonable period, whether underwritten to hold or distribute.
- A definition of leveraged finance that facilitates consistent application across all business lines.
- Well-defined underwriting standards that, among other things, define acceptable leverage levels and describe amortization expectations for senior and subordinate debt.
- A credit limit and concentration framework that is consistent with the institution's risk appetite.
- Sound MIS that enable management to identify, aggregate, and monitor leveraged exposures and comply with policy across all business lines.
- Strong pipeline management policies and procedures that, among other things, provide for real-time information on exposures and limits, and exceptions to the timing of expected distributions and approved hold levels.

The proposed guidance replaces existing leveraged finance guidance and forms the basis of the Agencies' supervisory focus and review of supervised financial institutions, including, as applicable, subsidiaries and affiliates involved in leveraged lending. In implementing the guidance, the Agencies will consider the size and risk profile of an institution's leveraged portfolio relative to its assets, earnings, liquidity, and capital. Although some sections of this proposal are intended to apply to all leveraged lending transactions (e.g., underwriting), the vast majority of community banks should not be affected by this guidance as they have no exposure to leveraged credits. The limited number of community and smaller institutions that are involved in leveraged lending activities should discuss with their primary regulator implementation of cost-effective controls appropriate for the complexity of their exposures and activities.

III. Administrative Law Matters

A. Paperwork Reduction Act Analysis

In accordance with the Paperwork Reduction Act (PRA) of 1995 (44 U.S.C. 3506; 5 CFR part 1320, Appendix A.1), the Agencies reviewed the proposed guidance. The Agencies may not conduct or sponsor, and an organization is not required to respond to, an information collection unless the information collection displays a currently valid OMB control number. The Agencies have determined that certain aspects of the proposed guidance may constitute a collection of information. In particular, these aspects are the provisions that state a banking organization should (i) have underwriting policies for leveraged lending, including stress testing procedures for leveraged credits; (ii) have risk management policies, including stress testing procedures for pipeline exposures; and (iii) have policies and procedures for incorporating the results of leveraged credit and pipeline stress tests into the firm's overall stress testing framework. The frequency of information collection is estimated to be annual. Respondents are banking organizations with leveraged lending activities as defined in the guidance.

Report Title: Guidance on Leveraged Lending.

Frequency of Response: Annual.

Affected Public: Banking Organizations with Leveraged Lending.

OCC

OMB Control No.: To be assigned by OMB.

Estimated number of respondents: 25.

Estimated average time per respondent: 1,350.4 hours to build; 1,705.6 hours for ongoing use.

Estimated total annual burden hours: 33,760 hours to build, 42,640 hours for ongoing use.

Board

Agency information collection number: FR 4203.

[2] "Annual Stress Test," Notice of Proposed Rulemaking, 77 FR 3408 (January 24, 2012).

[3] SR 01–9, "Interagency Guidance on Leveraged Financing," April 17, 2001, OCC Bulletin 2001–8, FDIC Press Release PR–28–2001.

[4] For the purpose of this guidance, references to leveraged finance or leveraged transactions encompass the entire debt structure of a leveraged obligor (including senior loans and letters of credit, mezzanine tranches, senior and subordinated bonds). References to leveraged lending and leveraged loan transactions and credit agreements refer to the senior loan and letter of credit tranches held by both bank and non-bank investors.

OMB Control No.: To be assigned by OMB.

Estimated number of respondents: 41.

Estimated average time per respondent: 1,064.4 hours to build, 754.4 hours for ongoing use.

Estimated total annual burden hours: 43,640 hours to build; 30,930 hours for ongoing use.

FDIC

OMB Control No.: To be assigned by OMB.

Estimated number of respondents: 9.

Estimated average time per respondent: 986.7 hours to build; 529.3 hours for ongoing use.

Estimated total annual burden hours: 8,880 hours to build, 4,764 hours for ongoing use.

The estimated time per respondent is an average that varies by agency because of differences in the composition of the institutions under each agency's supervision (e.g., size distribution of institutions) and volume of leveraged lending activities.

The Agencies invite comments on the following:

(1) Whether the proposed collection of information is necessary for the proper performance of the regulatory function; including whether the information has practical utility;

(2) The accuracy of the estimates of the burden of the proposed information collection, including the cost of compliance;

(3) Ways to enhance the quality, utility, and clarity of the information to be collected; and

(4) Ways to minimize the burden of information collection on respondents, including through the use of automated collection techniques or other forms of information technology.

Additionally, please send a copy of your comments regarding these proposed information collections by mail to: Desk Officer, U.S. Office of Management and Budget, 725 17th Street NW., #10235, Washington, DC 20503, or by fax to (202) 395–6974.

These information collections are authorized pursuant to the following statutory authorities:

OCC: National Bank Act, (12 U.S.C. 1 *et seq.;* 12 U.S.C. 161) and the International Banking Act (12 U.S.C. 3101 *et seq.*)

Board: Sections 11(a), 11(i), 25, and 25A of the Federal Reserve Act (12 U.S.C. 248(a), 248(i), 602, and 611), section 5 of the Bank Holding Company Act (12 U.S.C. 1844), and section 7(c) of the International Banking Act (12 U.S.C. 3105(c)).

FDIC: Federal Deposit Insurance Act, (12 U.S.C. 1811 *et seq.*) and the International Banking Act (12 U.S.C. 3101 *et seq.*).

The agencies expect to review the policies and procedures for stress testing as part of their supervisory processes. To the extent they collect information during an examination of a banking organization, confidential treatment may be afforded to the records under exemption 8 of the Freedom of Information Act (FOIA), 5 U.S.C. 552(b)(8).

B. Regulatory Flexibility Act Analysis

While the guidance is not being adopted as a rule, the Agencies have considered the potential impact of the proposed guidance on small banking organizations using the considerations that would apply if the Regulatory Flexibility Act (5 U.S.C. 603(b)) were applicable. For the reason discussed in the Supplementary Information above, the Agencies are issuing the proposed guidance to emphasize the importance of properly underwriting leveraged lending transactions and incorporating those exposures into stress and capital tests for institutions with significant exposures to these credits. Based on its analysis and for the reasons stated below, the Agencies believe that the proposed guidance will not have a significant economic impact on a substantial number of small entities. Nevertheless, the Agencies are seeking comment on whether the proposed guidance would impose undue burdens on, or have unintended consequences for, small organizations.

Under regulations issued by the Small Business Administration (SBA), a small banking organization is defined as a banking organization with total assets of $175 million or less. See 13 CFR 121.201. The guidance being proposed by the Agencies is intended for banking organizations supervised by the Agencies with substantial exposures to leveraged lending activities, including national banks, federal savings associations, state nonmember banks, state member banks, bank holding companies, and U.S. branches and Agencies of foreign banking organizations. Given the sheer size of leveraged lending transactions, most of which exceed $50 million, and the Agencies' observations that leveraged loans tend to be held primarily by large or global banking institutions with total assets that are well above $175 million, the effects of this guidance upon smaller institutions are expected to be negligible. Banking organizations that are subject to the proposed guidance therefore substantially exceed the $175 million total asset threshold at which a banking organization is considered a small banking organization under SBA regulations.

In light of the foregoing, the Agencies believe that the proposed guidance, if adopted in final form, would not have a significant economic impact on a substantial number of small entities. As noted above, the Agencies specifically seek comment on whether the proposed guidance would impose undue burdens on, or have unintended consequences for, small organizations and whether there are ways such potential burdens or consequences could be addressed in a manner consistent with the guidance.

IV. Proposed Guidance

The text of the proposed guidance is as follows:

Purpose

In April 2001, the Agencies (Office of the Comptroller of the Currency, Board of Governors of the Federal Reserve System, Federal Deposit Insurance Corporation, and Office of Thrift Supervision) issued guidance [5] regarding sound practices for leveraged finance [6] activities (2001 Guidance). The 2001 Guidance addressed expectations for the content of credit policies, the need for well-defined underwriting standards, the importance of defining an institution's risk appetite for leveraged transactions, and the importance of stress testing exposures and portfolios.

Since the issuance of that guidance, the Agencies have observed tremendous growth in the volume of leveraged credit and in the participation of non-regulated investors. As the market has grown, debt agreements have frequently included features that provided relatively limited lender protection, including the absence of meaningful maintenance covenants in loan agreements and the inclusion of payment-in-kind (PIK)-toggle features in junior capital instruments, both of which lessened lenders' recourse in the event of a borrower's subpar performance. Further, the capital structures and repayment prospects for some transactions, whether originated to hold or distribute, have at times been aggressive.

Absent meaningful limits and to support burgeoning demand from institutional investors, the pipeline of aggressively priced and structured commitments has grown rapidly. Further, management information systems (MIS) at some institutions have proven less than satisfactory in accurately aggregating exposures on a timely basis, and many institutions have found themselves holding large pipelines of higher-risk

[5] SR 01–9, ''Interagency Guidance on Leveraged Financing,'' April 17, 2001, OCC Bulletin 2001–8, FDIC Press Release PR–28–2001.

[6] For the purpose of this guidance, references to leveraged finance or leveraged transactions encompass the entire debt structure of a leveraged obligor (including senior loans and letters of credit, mezzanine tranches, senior and subordinated bonds). References to leveraged lending and leveraged loan transactions and credit agreements refer to the senior loan and letter of credit tranches held by both bank and non-bank investors.

commitments at a time when buyer demand for risky assets diminished significantly.

In light of these changes, the Agencies have decided to replace the 2001 Guidance with new leveraged finance guidance (2012 Guidance). The 2012 Guidance describes expectations for the sound risk management of leveraged finance activities, including the importance for institutions to develop and maintain:

- Transactions that are structured to reflect a sound business premise, an appropriate capital structure, and reasonable cash flow and balance sheet leverage. Combined with supportable performance projections, these should clearly support a borrower's capacity to repay and de-lever to a sustainable level over a reasonable period, whether underwritten to hold or distribute.
- A definition of leveraged finance that facilitates consistent application across all business lines.
- Well-defined underwriting standards that, among other things, define acceptable leverage levels and describe amortization expectations for senior and subordinate debt.
- A credit limit and concentration framework that is consistent with the institution's risk appetite.
- Sound MIS that enable management to identify, aggregate, and monitor leveraged exposures and comply with policy across all business lines.
- Strong pipeline management policies and procedures that, among other things, provide for real-time information on exposures and limits, and exceptions to the timing of expected distributions and approved hold levels.

Applicability

This issuance replaces existing leveraged finance guidance and forms the basis of the Agencies' supervisory focus and review of supervised financial institutions, including subsidiaries and affiliates. Implementation of this guidance should be consistent with the size and risk profile of an institution's leveraged portfolio relative to its assets, earnings, liquidity, and capital. Although some sections of this guidance should apply to all leveraged transactions (e.g., underwriting), the vast majority of community banks should not be affected by this guidance as they have no exposure to leveraged credits. The limited number of community and smaller institutions that have leveraged lending activities should discuss with their primary regulator implementation of cost-effective controls appropriate for the complexity of their exposures and activities.

Risk Management Framework

Given the high risk profile of leveraged exposures, institutions engaged in leveraged financing should adopt a risk management framework that has an intensive and frequent review and monitoring process. The framework should have as its foundation written risk objectives, risk acceptance criteria, and risk controls. The lack of robust risk management processes and controls in institutions with significant leveraged finance activities could contribute to a finding that the institution is engaged in an unsafe and unsound banking practice. This guidance outlines minimum regulatory expectations and covers the following topics:

- Definition of Leveraged Finance.
- General Policy Expectations.
- Underwriting Standards.
- Valuation Standards.
- Pipeline Management.
- Reporting and Analytics.
- Rating Leveraged Loans.
- Other Key Risk Management Components.
- Credit Analysis.
- Problem Credits.
- Deal Sponsors.
- Credit Review.
- Conflicts of Interest.
- Anti-tying.
- Reputation Risk.
- Securities Laws.
- Compliance.

Definition of Leveraged Finance

Institutions' policies should include criteria to define leveraged finance. Numerous definitions of leveraged finance exist throughout the financial services industry and commonly contain some combination of the following:

- Proceeds are used for buyouts, acquisitions, or capital distributions.
- Transactions where the borrower's Total Debt/EBITDA (earnings before interest, taxes, depreciation, and amortization) or Senior Debt/EBITDA exceed 4.0X EBITDA or 3.0X EBITDA, respectively, or other defined levels appropriate to the industry or sector.[7]
- Borrower that is recognized in the debt markets as a highly leveraged firm, which is characterized by a high debt-to-net-worth ratio.
- Transactions where the borrower's post-financing leverage, when measured by its leverage ratios, debt-to-assets, debt-to-net-worth, debt-to-cash flow, or other similar standards common to particular industries or sectors, significantly exceeds industry norms or historical levels.[8]

Institutions engaging in this type of activity should define leveraged finance within their policies in a manner sufficiently detailed to ensure consistent application across all business lines.

Examiners should expect the bank's definition to describe clearly the purposes and financial characteristics common to these transactions, and this definition should include the bank's exposure to financial vehicles, whether or not leveraged, that engage in leveraged finance activities.

General Policy Expectations

An institution's credit policies and procedures for leveraged finance should address the following items:

- Management should identify the institution's risk appetite, which should include clearly defined amounts of leveraged finance that the institution is willing to underwrite (pipeline limits) and leveraged loans it is willing to retain (i.e., transaction and aggregate hold levels). The designated risk appetite should be supported by an analysis of the potential effect on earnings, capital, liquidity, and other risks that result from these positions, and should be approved by the board of directors.
- A limit framework that includes limits or guidelines for single obligors and transactions, aggregate hold portfolio, aggregate pipeline exposure, and industry and geographic concentrations. The limit framework should identify the related approval authorities and exception tracking provisions. In addition to notional pipeline limits, underwriting limit frameworks that assess stress losses, flex terms, economic capital usage, and earnings at risk or otherwise provide a more nuanced view of potential risk are expected from institutions with significant leveraged finance exposure.
- Ensuring that the risks of leveraged lending activities are appropriately reflected in an institution's Allowance for Loan and Lease Losses and capital adequacy analyses.
- Credit and underwriting approval authorities, including the procedures for approving and documenting changes to approved transaction structures and terms.
- Appropriate oversight by senior management, including adequate and timely reporting to the board.
- The expected risk-adjusted returns for leveraged transactions.
- Minimum underwriting standards (see Underwriting Standards below).
- The degree to which underwriting practices may differ between primary loan origination and secondary loan acquisition.

Underwriting Standards

An institution's underwriting standards should be clear, written, measurable, and accurately reflect the institution's risk appetite for leveraged finance transactions. Institutions should have clear underwriting limits regarding leveraged transactions, including the size that the institution will arrange both individually and in the aggregate for distribution. Originating institutions should be mindful of reputational risks associated with poorly underwritten transactions, which may find their way into a wide variety of investment instruments and exacerbate systemic risks within the general economy. At a minimum, underwriting standards should consider:

- Whether the business premise for each transaction is sound and its capital structure is sustainable regardless of whether the transaction is underwritten for the institution's own portfolio or with the intent to distribute. The entirety of a borrower's capital structure should reflect the application of sound financial analysis and underwriting principles.
- A borrower's capacity to repay and its ability to de-lever to a sustainable level over a reasonable period. As a general guide, base case cash-flow projections should show the ability over a five-to-seven year period to fully amortize senior secured debt or repay at least 50 percent of total debt. Projections should also include one or more realistic downside scenarios that reflect the key risks identified in the transaction.

[7] Cash should not be netted against debt for purposes of this calculation.

[8] Higher quality borrowers not initially designated as part of the leveraged portfolio, but which otherwise meet the institution's definition, should be added to the portfolio if their financial performance and prospects deteriorate (i.e., fallen angels).

• Expectations for the depth and breadth of due diligence on leveraged transactions. This should include standards for evaluating various types of collateral, and it should clearly define credit risk management's role in such due diligence.

• Standards for evaluating expected risk-adjusted returns. The standards should include identification of expected distribution strategies, including alternative strategies for funding and disposing of positions during market disruptions, and the potential for losses during such periods.

• Degree of reliance on enterprise value and other intangible assets for loan repayment, along with acceptable valuation methodologies, and guidelines for the frequency of periodic reviews of those values.

• Expectations for the degree of support provided by the sponsor (if any), taking into consideration their financial capacity, the extent of their capital contribution at inception, and other motivating factors.

• Whether credit agreement terms allow for the material dilution, sale or exchange of collateral or cash flow-producing assets without lender approval.

• Credit agreement covenant protections, including financial performance (such as debt to cash flow, interest coverage or fixed charge coverage), reporting requirements, and compliance monitoring. Generally, a leverage level after planned asset sales (i.e., debt that must be serviced from operating cash flow) in excess of 6x for Total Debt/EBITDA raises concerns for most industries.

• Collateral requirements in credit agreements that specify acceptable collateral and risk-appropriate measures and controls, including acceptable collateral types, loan-to-value guidelines, and appropriate collateral valuation methodologies. Standards for asset-based loans should also outline expectations for the use of collateral controls (e.g., inspections, independent valuations, and lockbox), other types of collateral and account maintenance agreements, and periodic reporting requirements.

• Whether loan agreements provide for distribution of ongoing financial and other relevant credit information to all participants/investors.

Nothing in the preceding standards should be considered to discourage providing financing to borrowers engaged in workout negotiations, or as part of a pre-packaged financing under the bankruptcy code. Neither are they meant to discourage well-structured standalone asset-based credit facilities to borrowers with strong lender monitoring and controls, for which banks should consider separate underwriting and risk rating guidance.

Valuation Standards

Lenders often rely upon enterprise value and other intangibles when (1) evaluating the feasibility of a loan request, (2) determining the debt reduction potential of planned asset sales, (3) assessing a borrower's ability to access the capital markets, and (4) estimating the strength of a secondary source of repayment. Lenders may also view enterprise value as a useful benchmark for assessing a sponsor's economic incentive to provide financial support. Given the specialized knowledge needed for the development of a credible enterprise valuation and the importance of enterprise valuations in the underwriting and ongoing risk assessment processes, enterprise valuations should be performed or validated by qualified persons independent of the origination function.

Conventional appraisal theory provides three approaches for valuing closely held businesses—asset, income, and market. Asset approach methods consider an enterprise's underlying assets in terms of its net going-concern or liquidation value. Income approach methods consider an enterprise's ongoing cash flows or earnings and apply appropriate capitalization or discounting techniques. Market approach methods derive value multiples from comparable company data or sales transactions. Although value estimates should reconcile results from the use of all three approaches, the income approach is generally considered the most common and reliable method. There are two common methods to the income approach. The ''*capitalized cash flow*'' method determines the value of a company as the present value of all the future cash flows that the business can generate in perpetuity. An appropriate cash flow is determined and then divided by a risk-adjusted capitalization rate, most commonly the weighted average cost of capital. This method is most appropriate when cash flows are predictable and stable. The *''discounted cash flow''* method is a multiple-period valuation model that converts a future series of cash flows into current value by discounting those cash flows at a rate of return (discount rate) that reflects the risk inherent therein and matches the cash flow. This method is most appropriate when future cash flows are cyclical or variable between periods. Both methods involve numerous assumptions, and supporting documentation should therefore fully explain the evaluator's reasoning and conclusions.

When an obligor is experiencing a financial downturn or facing adverse market conditions, a lender should reflect those adverse conditions in its assumptions for key variables such as cash flow, earnings, and sales multiples when assessing enterprise value as a potential source of repayment. Changes in the value of a firm's assets should be tested under a range of stress scenarios, including business conditions more adverse than the base case scenario. Stress testing of enterprise values and their underlying assumptions should be conducted and documented both at origination of the transaction and periodically thereafter, incorporating the actual performance of the borrower and any adjustments to projections. The institution should perform its own discounted cash flow analysis to validate the enterprise value implied by proxy measures such as multiples of cash flow, earnings, or sales.

Valuations derived with even the most rigorous valuation procedures are imprecise and ultimately may not be realized. Therefore, institutions relying on enterprise value or illiquid and hard-to-value collateral should have policies that provide for appropriate loan-to-value ratios, discount rates, and collateral margins. Based on the nature of an institution's leveraged lending activities, establishing limits for the proportion of individual transactions and the total portfolio that are supported by enterprise value may be appropriate. Whatever the methodology, assumptions underlying enterprise valuations should be clearly documented, well supported, and understood by institutions' appropriate decision-makers and risk oversight units. Examiners should ensure that the valuation approach is appropriate for the company's industry and condition.

Pipeline Management

Market disruptions can substantially impede the ability of an underwriter to consummate syndications or otherwise sell down exposures, which may result in material losses. Accordingly, institutions should have strong risk management and controls over transactions in the pipeline, including amounts to be held and those to be distributed. An institution should be able to differentiate transactions according to tenor, investor class (*e.g.,* pro-rata, institutional), structure, and key borrower characteristics (*e.g.,* industry). In addition, an institution should develop and maintain:

• A clearly articulated and documented appetite for underwriting risk that considers the potential effects on earnings, capital, liquidity, and other risks that result from these positions.

• Written procedures for defining and managing distribution fails and ''hung'' deals, which are identified by an inability to sell down the exposure within a reasonable period (generally 90 days from closing). The institution's board should establish clear expectations for the disposition of pipeline transactions that have not been sold according to their original distribution plan. Such transactions that are subsequently reclassified as hold-to-maturity should also be included in reports to management and the board of directors.

• Guidelines for conducting periodic stress tests on pipeline exposures to quantify the potential impact of changing economic/market conditions on asset quality, earnings, liquidity, and capital.

• Controls to monitor performance of the pipeline against original expectations, and regular reports of variances to management, including the amount and timing of syndication/distribution variances, and reporting if distribution was achieved through a recourse sale.

• Reports that include individual and aggregate transaction information that accurately portrays risk and concentrations in the pipeline.

• Limits on aggregate pipeline commitments and periodic testing of such exposures under different market scenarios.

• Limits on the amount of loans that an institution is willing to retain on its own books (i.e., borrower/counterparty and aggregate hold levels), and limits on the underwriting risk that will be undertaken for amounts intended for distribution.

• Policies and procedures that identify acceptable accounting methodologies and controls in both functional as well as

dysfunctional markets, and that direct prompt recognition of losses in accordance with generally accepted accounting principles.

• Policies and procedures addressing the use of hedging to reduce pipeline and hold exposures. Policies should address acceptable types of hedges and the terms considered necessary for providing hedge credit (netting) for exposure measurement.

• Plans and provisions addressing contingent liquidity and compliance with Regulation W (12 CFR part 223) when market illiquidity or credit conditions change, interrupting normal distribution channels.

Reporting and Analytics

The Agencies expect financial institutions to diligently monitor higher risk credits, including leveraged loans. An institution's management should receive comprehensive reports about the characteristics and trends in such exposures at least quarterly, and summaries should be provided to the board of directors. Policies should identify the fields to be populated and captured by an institution's MIS, which should yield accurate and timely reporting to management and the board that may include:

• Individual and portfolio exposures within and across all business lines and legal vehicles, including the pipeline.

• Risk rating distribution and migration analysis, including maintenance of a list of those borrowers who have been removed from the leveraged portfolio due to changes in their financial characteristics and overall risk profile.

• Industry mix and maturity profile.

• Metrics derived from probabilities of default and loss given default.

• Portfolio performance measures, including noncompliance with covenants, restructurings, delinquencies, non-performing amounts and charge-offs.

• Amount of impaired assets and the nature of impairment (i.e., permanent, temporary), and the amount of the Allowance for Loan and Lease Losses attributable to leveraged lending.

• The aggregate level of policy exceptions and the performance of that portfolio.

• Exposure by collateral type, including unsecured transactions and those where enterprise value is a source of repayment for leveraged loans. Reporting should also consider the implications of defaults that trigger pari passu treatment for all lenders and thus dilute secondary support from collateral value.

• Secondary market pricing data and trading volume when available.

• Exposure and performance by deal sponsor.

• Gross and net exposures, hedge counterparty concentrations, and policy exceptions.

• Actual versus projected distribution of the syndicated pipeline, with regular reports of excess levels over the hold targets for syndication inventory. Pipeline definitions should clearly identify the type of exposure (e.g., committed exposures that have not been accepted by the borrower, commitments accepted but not closed, and funded and unfunded commitments that have closed but have not been distributed).

• Guidelines for conducting periodic portfolio stress tests (including pipeline exposures) or sensitivity analyses to quantify the potential impact of changing economic/market conditions on asset quality, earnings, liquidity, and capital. The sophistication of stress-testing practices and sensitivity analysis should be consistent with the size, complexity, and risk characteristics of the leveraged loan portfolio. The leveraged portfolio also should be included in any enterprise-wide stress tests.

• Total and segment leveraged finance exposures, including subordinated debt and equity holdings, alongside established limits. Reports should provide a detailed and comprehensive view of global exposure, including situations where institutions have indirect exposure to an obligor or are holding a previously sold position as collateral or as a reference asset in a derivative.

• Borrower/counterparty leveraged finance reporting should consider exposures booked in other business units throughout the institution, including indirect exposure such as default swaps and total return swaps naming the distributed paper as a covered or reference asset or collateral exposure through repo transactions. Additionally, the institution should consider positions held in available for sale or traded portfolios or through structured investment vehicles owned or sponsored by the originating institution or its subsidiaries or affiliates.

Risk Rating Leveraged Loans

The Agencies have previously issued guidance on rating credit exposures and credit rating systems, which applies to all credit transactions, including those in the leveraged lending category.[9]

Risk rating leveraged loans involves the use of realistic repayment assumptions to determine the borrower's ability to de-lever to a sustainable level within a reasonable period of time. If the projected capacity to pay down debt from cash flow is nominal, with refinancing the only viable option, the credit will usually be criticized even if it has been recently underwritten. In cases where leveraged loan transactions have no reasonable or realistic prospects to de-lever, a substandard classification is likely. Furthermore, when assessing debt service capacity, extensions and restructures should be scrutinized to ensure that they are not merely masking repayment capacity problems.

If the primary source of repayment becomes inadequate it would generally be inappropriate to consider enterprise value as a secondary source unless that value is well supported. Evidence of well-supported value may include binding purchase and sale agreements with qualified third parties or through valuations that fully consider the effect of the borrower's distressed circumstances and potential changes in business and market conditions. For such borrowers, when a portion of the loan may not be protected by pledged assets or a well-supported enterprise value, examiners generally will rate that portion doubtful or loss and place the loan on nonaccrual.

Other Key Risk Management Components

Credit Analysis

Effective underwriting and management of leveraged finance risk is highly dependent on the quality of analysis employed during the approval process as well as ongoing monitoring. Policies should address the need for a comprehensive assessment of financial, business, industry, and management risks including, but not limited to, whether:

• Cash flow analyses rely on overly optimistic or unsubstantiated projections of sales, margins, and merger and acquisition synergies.

• Liquidity analyses include performance metrics appropriate for the borrower's industry, predictability of the borrower's cash flow, measurement of the borrower's operating cash needs, and ability to meet debt maturities.

• Projections exhibit an adequate margin for unanticipated merger-related integration costs.

• Projections are stress tested for several downside scenarios, including a covenant breach.

• Transactions are reviewed at least quarterly to determine variance from plan, the risk implications thereof, and the accuracy of risk ratings and accrual status. From inception, the credit file should contain a chronological rationale for and analysis of all substantive changes to the borrower's operating plan and variance from expected financial performance.

• Enterprise and collateral valuations are derived or validated independently of the origination function, are timely, and consider potential value erosion.

• Collateral liquidation and asset sale estimates are conservative.

• Potential collateral shortfalls are identified and factored into risk rating and accrual decisions.

• Contingency plans anticipate changing conditions in debt or equity markets when exposures rely on refinancing or the issuance of new equity.

• The borrower is adequately protected from interest rate and foreign exchange risk.

Problem Credit Management

Financial institutions should formulate individual action plans when working with borrowers that are experiencing diminished operating cash flows, depreciated collateral values, or other significant variance to plan. Weak initial underwriting of transactions, coupled with poor structure and limited covenants, may make problem credit discussions and eventual restructurings more difficult for lenders as well as result in less favorable outcomes.

Institutions should formulate credit policies that define expectations for the management of adversely rated and other high-risk borrowers whose performance departs significantly from planned cash flows, asset sales, collateral values, or other important targets. These policies should stress the need for workout plans that contain

[9] FRB SR 98–25 ''Sound Credit Risk Management and the Use of Internal Credit Risk Ratings at Large Banking Organizations;'' OCC Handbooks ''Rating Credit Risk'' and ''Leveraged Lending;'' FDIC Risk Management Manual of Examination Policies, ''Loan Appraisal and Classification.''

quantifiable objectives and measureable time frames. Actions may include working with the borrower for an orderly resolution while preserving the institution's interests, sale of the credit in the secondary market, or liquidation. Problem credits should be reviewed regularly for risk rating accuracy, accrual status, recognition of impairment through specific allocations, and charge-offs.

Deal Sponsors

Institutions should develop guidelines for evaluating the qualifications of financial sponsors and implement a process to regularly monitor performance. Deal sponsors may provide valuable support to borrowers such as strategic planning, management, and other tangible and intangible benefits. Sponsors may also provide a source of financial support for a borrower that fails to achieve projections. Institutions generally rate borrowers based on their analysis of the borrowers' standalone financial condition. However, lending institutions may consider support from a sponsor in assigning an internal risk rating when the institution can document the sponsor's history of demonstrated support as well as the economic incentive, capacity, and stated intent to continue to support the transaction. However, even with documented capacity and a history of support, a sponsor's potential contributions may not mitigate examiner criticism absent a documented commitment of continued support. An evaluation of a sponsor's financial support should include the following:

- Sponsor's historical performance in supporting its investments, financially and otherwise.
- Sponsor's economic incentive to support, including the nature and amount of capital contributed at inception.
- Documentation of degree of support (e.g., guarantee, comfort letter, verbal assurance).
- Consideration of the sponsor's contractual investment limitations.
- To the extent feasible, a periodic review of the sponsor's financial statements and trends, and an analysis of its liquidity, including the ability to fund multiple deals.
- Consideration of the sponsor's dividend and capital contribution practices.
- Likelihood of supporting the borrower compared to other deals in the sponsor's portfolio.
- Guidelines for evaluating the qualifications of financial sponsors and a process to regularly monitor performance.

Credit Review

Institutions should have a strong and independent credit review function with a demonstrated ability to identify portfolio risks and documented authority to escalate inappropriate risks and other findings to senior management. Due to the elevated risk inherent in leveraged finance, and depending on the relative size of an institution's leveraged finance business, it may be prudent for the institution's credit review function to examine the leveraged portfolio more frequently than other segments, go into greater depth, and be more selective in identifying personnel to assess the underlying transactions. Portfolio reviews should generally be conducted at least annually. For many institutions, the risk characteristics of the leveraged portfolio, such as high reliance on enterprise value, concentrations, adverse risk rating trends, or portfolio performance, may dictate more frequent reviews.

Institutions should staff their internal credit review function appropriately and ensure that it has sufficient resources to ensure timely, independent, and accurate assessments of leveraged finance transactions. Reviews should evaluate the level of risk and risk rating integrity, valuation methodologies, and the quality of risk management. Internal credit reviews also should encompass a review of the institution's leveraged finance practices, policies and procedures to ensure that they are consistent with regulatory guidance.

Conflicts of Interest

Institutions should develop appropriate policies to address and prevent potential conflicts of interest. For example, a lender may be reluctant to use an aggressive collection strategy with a problem borrower because of the potential impact on the value of the lender's equity interest. A lender may receive pressure to provide financial or other privileged client information that could benefit an affiliated equity investor. Such conflicts also may occur where the underwriting bank serves as financial advisor to the seller and simultaneously offers financing to multiple buyers (i.e., stapled financing). Similarly, there may be conflicting interests between the different lines of business or between the institution and its affiliates. These and other situations may arise that create conflicts of interest between the institution and its customers. Policies should clearly define potential conflicts of interest, identify appropriate risk management controls and procedures, enable employees to report potential conflicts of interest to management for action without fear of retribution, and ensure compliance with applicable law. Further, management should establish responsibility for training employees on how to avoid conflicts of interest, as well as provide for reporting, tracking, and resolution of any conflicts of interest that occur.

Anti-Tying Regulations

Because leveraged finance transactions often involve a number of types of debt and several bank products, institutions should ensure that their policies incorporate safeguards to prevent violations of anti-tying regulations. Section 106(b) of the BHC Act Amendments of 1970 prohibits certain forms of product tying by banks and their affiliates. The intent behind section 106(b) is to prevent institutions from using their market power over certain products to obtain an unfair competitive advantage in other products.

Reputational Risk

Leveraged finance transactions are often syndicated through the bank and institutional markets. An institution's apparent failure to meet its legal or fiduciary responsibilities in underwriting and distributing transactions can damage its reputation and impair its ability to compete. Similarly, institutions distributing transactions that over time have significantly higher default or loss rates and performance issues may also see their reputation damaged in the markets.

Securities Laws

Equity interests and certain debt instruments used in leveraged finance transactions may constitute ''securities'' for the purposes of federal securities laws. When securities are involved, institutions should ensure compliance with applicable securities laws, including disclosure and other regulatory requirements. Institutions should also establish procedures to appropriately manage the internal dissemination of material nonpublic information about transactions in which it plays a role.

Compliance Function

The legal and regulatory issues raised by leveraged transactions are numerous and complex. To ensure that potential conflicts are avoided and laws and regulations are adhered to, an independent compliance function should periodically review an institution's leveraged finance activity. Additional information is available in the Agencies' existing guidance on compliance with laws and regulations.

Conclusion

Leveraged finance is an important type of financing for the economy, and the banking industry plays an integral role in making credit available and syndicating that credit to investors. Institutions should ensure they do not heighten risks by originating poorly underwritten deals that find their way into a wide variety of investment instruments. Therefore, it is important this financing be provided to creditworthy borrowers in a safe and sound manner that is consistent with this guidance.

Dated: March 19, 2012.

John Walsh,

Acting Comptroller of the Currency.

By order of the Board of Governors of the Federal Reserve System, March 22, 2012.

Jennifer J. Johnson,

Secretary of the Board.

Dated at Washington, DC, this 26th Day of March 2012.

Federal Deposit Insurance Corporation.

Valerie J. Best,

Assistant Executive Secretary.

[FR Doc. 2012–7620 Filed 3–29–12; 8:45 am]

BILLING CODE 4810–33– 6210–01– 6714–01–P

DEPARTMENT OF THE TREASURY

Bureau of the Public Debt

Proposed Collection; Comment Request

ACTION: Notice and request for comments.

SUMMARY: The Department of the Treasury, as part of its continuing effort

to reduce paperwork and respondent burden, invites the general public and other Federal agencies to take this opportunity to comment on proposed and/or continuing information collections, as required by the Paperwork Reduction Act of 1995, Public Law 104–13 (44 U.S.C. 3506(c)(2)(A). Currently the Bureau of the Public Debt within the Department of the Treasury is soliciting comments concerning the Application For Disposition Of Retirement Plan and/or Individual Retirement Bonds Without Administration Of Deceased Owner's Estate.

DATES: Written comments should be received on or before May 30, 2012 to be assured of consideration.

ADDRESSES: Direct all written comments to Bureau of the Public Debt, Bruce A. Sharp, 200 Third Street A4–A, Parkersburg, WV 26106–1328, or *bruce.sharp@bpd.treas.gov.* The opportunity to make comments online is also available at *www.pracomment.gov.*

FOR FURTHER INFORMATION CONTACT: Requests for additional information or copies should be directed to Bruce A. Sharp, Bureau of the Public Debt, 200 Third Street A4–A, Parkersburg, WV 26106–1328, (304) 480–8150.

SUPPLEMENTARY INFORMATION:

Title: Application For Disposition Of Retirement Plan and/or Individual Retirement Bonds Without Administration Of Deceased Owner's Estate.

OMB Number: 1535–0032.

Form Number: PD F 3565.

Abstract: The information is used to support a request for disposition by the heirs of deceased owners or Retirement Plan and/or Individual Retirement bonds.

Current Actions: None.

Type of Review: Extension.

Affected Public: Individuals or Households.

Estimated Number of Respondents: 350.

Estimated Time Per Respondent: 20 minutes.

Estimated Total Annual Burden Hours: 117.

Request for Comments: Comments submitted in response to this notice will be summarized and/or included in the request for OMB approval. All comments will become a matter of public record. Comments are invited on: (a) Whether the collection of information is necessary for the proper performance of the functions of the agency, including whether the information shall have practical utility; (b) the accuracy of the agency's estimate of the burden of the collection of information; (c) ways to enhance the quality, utility, and clarity of the information to be collected; (d) ways to minimize the burden of the collection of information on respondents, including through the use of automated collection techniques or other forms of information technology; and (e) estimates of capital or start-up costs and costs of operation, maintenance, and purchase of services to provide information.

Dated: March 26, 2012.

Bruce A. Sharp,

Bureau Clearance Officer.

[FR Doc. 2012–7603 Filed 3–29–12; 8:45 am]

BILLING CODE 4810–39–P

DEPARTMENT OF VETERANS AFFAIRS

Prescription Drugs Not Administered During Treatment; Update to Administrative Cost for Calendar Year 2012

AGENCY: Department of Veterans Affairs.

ACTION: Notice.

SUMMARY: This Department of Veterans Affairs (VA) notice informs the public of the updated ''National Average Administrative Costs'' for purposes of calculating VA's charges for prescription drugs that were not administered during treatment but were provided or furnished by VA to a veteran for: A nonservice-connected disability for which the veteran is entitled to care (or the payment of expenses of care) under a health plan contract; a nonservice-connected disability incurred incident to the veteran's employment and covered under a worker's compensation law or plan that provides reimbursement or indemnification for such care and services; or a nonservice-connected disability incurred as a result of a motor vehicle accident in a State that requires automobile accident reparations insurance. This updated administrative cost charge was effective on January 1, 2012, for Calendar Year 2012.

FOR FURTHER INFORMATION CONTACT: Romona Greene, Chief Business Office (10NB1A), Veterans Health Administration, Department of Veterans Affairs, 810 Vermont Avenue NW., Washington, DC 20420, (202) 461–1595. This is not a toll free number.

SUPPLEMENTARY INFORMATION: Section 17.101 of title 38, Code of Federal Regulations, sets forth VA's medical regulations concerning the collection or recovery by VA for medical care or services provided or furnished to a veteran for a nonservice-connected disability. As provided in 38 CFR 17.101(m), when VA provides or furnishes prescription drugs not administered during treatment for: (1) A nonservice-connected disability for which the veteran is entitled to care (or the payment of expenses of care) under a health plan contract; (2) a nonservice-connected disability incurred incident to the veteran's employment and covered under a worker's compensation law or plan that provides reimbursement or indemnification for such care and services; or (3) a nonservice-connected disability incurred as a result of a motor vehicle accident in a State that requires automobile accident reparations insurance, ''charges billed separately for such prescription drugs will consist of the amount that equals the total of the actual cost to VA for the drugs and the national average of VA administrative costs associated with dispensing the drugs for each prescription.''

Section 17.101(m) includes the methodology for calculating the national average administrative cost for prescription drug charges not administered during treatment. The administrative cost is determined annually using VA's managerial cost accounting system. Under this accounting system, the national average administrative cost is determined by adding the total VA national drug general overhead costs (such as costs of buildings and maintenance, utilities, billing, and collections) to the total VA national drug dispensing costs (such as costs of the labor of the pharmacy department, packaging, and mailing) with the sum divided by the actual number of VA prescriptions filled nationally. The labor cost also includes cost for the professional activity of reviewing and dispensing a prescription.

Based on this accounting system, VA will determine the amount of the national average administrative cost annually for the prior fiscal year (October through September) and then apply the charge at the start of the next calendar year. The national average administrative cost for calendar year 2012 is $12.39 and was effective on January 1, 2012.

This notice will be posted at *http://www1.va.gov/CBO/apps/rates/index.asp* under the heading ''**Federal Registers**, Rules, and Notices'' and identified as ''Administrative Charge **Federal Register** Notice, CY 2012.'' Following this **Federal Register** notice, all subsequent **Federal Register** notices providing updates on the administrative charge will be published in conjunction with the **Federal Register** notices

providing updates on the charges for outpatient facilities and professional services.

Approved: March 23, 2012.

John R. Gingrich,

Chief of Staff, Department of Veterans Affairs.

[FR Doc. 2012–7621 Filed 3–29–12; 8:45 am]

BILLING CODE 8320–01–P

FEDERAL REGISTER

Vol. 77 Friday,

No. 62 March 30, 2012

Part II

Securities and Exchange Commission

Self-Regulatory Organizations; The NASDAQ Stock Market LLC; Order Granting Approval of Proposed Rule Change, as Modified by Amendment No. 1 Thereto, Relating to the Adoption of Listing Standards for Certain Securities; Notice

SECURITIES AND EXCHANGE COMMISSION

[Release No. 34–66648; File No. SR–NASDAQ–2012–013]

Self-Regulatory Organizations; The NASDAQ Stock Market LLC; Order Granting Approval of Proposed Rule Change, as Modified by Amendment No. 1 Thereto, Relating to the Adoption of Listing Standards for Certain Securities

March 23, 2012.

I. Introduction

On January 20, 2012, The NASDAQ Stock Market LLC (''NASDAQ'' or ''Exchange'') filed with the Securities and Exchange Commission (''Commission''), pursuant to Section 19(b)(1) of the Securities Exchange Act of 1934 (''Act'') [1] and Rule 19b–4 thereunder,[2] a proposed rule change to adopt rules applicable to the qualification, listing, trading, and delisting of certain securities on NASDAQ. The proposed rule change was published for comment in the **Federal Register** on February 9, 2012.[3] The Commission received no comments on the proposal. On March 21, 2012, the Exchange filed Amendment No. 1 to the proposed rule change.[4] This order grants approval of the proposed rule change, as modified by Amendment No. 1 thereto.

II. Description of the Proposed Rule Change

The Exchange proposes to adopt rules applicable to the qualification, listing, trading, and delisting on NASDAQ (''Listing Rules'') of certain securities. Specifically, NASDAQ proposes to amend Rule 5710 (''Securities Linked to the Performance of Indexes and Commodities (Including Currencies)'') to: (i) Incorporate generic continued listing standards for Equity Index-Linked Securities and Commodity-Linked Securities (collectively, ''Existing Linked Securities'') under Rule 5710; [5] (ii) adopt initial and continued generic listing standards for Fixed Income Index-Linked Securities, Futures-Linked Securities, and Multifactor Index-Linked Securities (collectively, ''Additional Linked Securities,'' and together with the Existing Linked Securities, ''Linked Securities''); [6] (iii) revise the introductory paragraph to incorporate references to, and provide descriptions of, the Additional Linked Securities; [7] (iv) revise the paragraph of Rule 5710 relating to trading halts to clarify that it applies to all Linked Securities; [8] (v) adopt Commentary .01 relating to obligations of Market Makers in Linked Securities; [9] and (vi) correct cross references and conform defined terms. In addition, NASDAQ proposes new Rule 5711 (''Trading of Certain Derivative Securities'') to adopt initial and continued listing criteria for the following securities: Index-Linked Exchangeable Notes; Equity Gold Shares; Trust Certificates; Commodity-Based Trust Shares; Currency Trust Shares; Commodity Index Trust Shares; Commodity Futures Trust Shares; Partnership Units; Trust Units; Managed Trust Securities; and Currency Warrants (together with the Linked Securities, collectively, the ''Subject Securities'').[10] The proposed Listing Rules are based on, and are substantially similar to, the listing standards of NYSE Arca, Inc. (''NYSE Arca'') for the listing and trading of the Subject Securities.

A. Proposed Amendments to Rule 5710 (''Securities Linked to the Performance of Indexes and Commodities (Including Currencies)'')

NASDAQ has proposed to amend the introductory paragraphs of Rule 5710 to state that NASDAQ will consider for listing and trading Fixed Income Index-Linked Securities, Futures-Linked Securities, and Multifactor Index-Linked Securities that in each case meet the applicable criteria of Rule 5710. In addition, the Exchange has proposed to amend the introductory paragraph to provide definitions for ''Equity Reference Asset'' and ''Commodity Reference Asset,'' which refer to the basis for payment at maturity for Equity Index-Linked Securities and Commodity-Linked Securities, respectively. NASDAQ has further proposed to amend the introductory paragraph to describe the basis for payment at maturity for each of the Additional Linked Securities as follows:

- The payment at maturity with respect to Fixed Income Index-Linked Securities is based on the performance of one or more indexes or portfolios of notes, bonds, debentures or evidence of indebtedness that include, but are not limited to, U.S. Department of Treasury securities (''Treasury Securities''), government-sponsored entity securities (''GSE Securities''), municipal securities, trust preferred securities, supranational debt and debt of a foreign country or a subdivision thereof or a basket or index of any of the foregoing (''Fixed Income Reference Asset'').
- The payment at maturity with respect to Futures-Linked Securities is based on the performance of an index of (a) futures on Treasury Securities, GSE Securities, supranational debt and debt of a foreign country or a subdivision thereof, or options or other derivatives on any of the foregoing; or (b) interest rate futures or options or derivatives on the foregoing in this subparagraph (b); or (c) CBOE Volatility Index (VIX) Futures (''Futures Reference Asset'').
- The payment at maturity with respect to Multifactor Index-Linked Securities is based on the performance of any combination of two or more Equity Reference Assets, Commodity Reference Assets, Fixed Income Reference Assets or Futures Reference Assets (''Multifactor Reference Asset,'' and together with Equity Reference Assets, Commodity Reference Assets, Fixed Income Reference Assets and Futures Reference Assets, ''Reference Assets''). A Multifactor Reference Asset may include as a component a notional investment in cash or a cash equivalent based on a widely accepted overnight

[1] 15 U.S.C. 78s(b)(1).

[2] 17 CFR 240.19b–4.

[3] *See* Securities Exchange Act Release No. 66320 (February 3, 2012), 77 FR 6833 (''Notice'').

[4] In Amendment No. 1, consistent with its proposal to conform the continued listing requirements applicable to Equity Index-Linked Securities and Commodity-Linked Securities to those of another national securities exchange and to incorporate such requirements under proposed Rules 5710(k)(i)(B) and (k)(ii)(B), NASDAQ proposes to delete existing references to continued listing standards applicable to Linked Securities (as defined herein) in Rule 5730(b). In addition, in Amendment No. 1, NASDAQ proposes to incorporate additional rule requirements relating to information dissemination applicable to Index-Linked Exchangeable Notes in order to conform its proposal with the listing requirements for Index-Linked Exchangeable Notes of another national securities exchange. This technical amendment does not require notice and comment as it did not materially affect the substance of the rule filing or raise any unique or novel regulatory issues.

[5] NASDAQ Rules 5710(g) and (h) currently include initial listing standards applicable to the Existing Linked Securities. NASDAQ proposes to move the existing rule text in Rules 5710(g) and (h) to proposed Rule 5710(k)(i)(A) and (k)(ii)(A), respectively. In addition, NASDAQ Rule 5730(b) currently includes continued listing standards applicable to Existing Linked Securities. NASDAQ proposes to conform the continued listing requirements applicable to the Existing Linked Securities to those of another national securities exchange, to incorporate such requirements under proposed Rules 5710(k)(i)(B) and (k)(ii)(B), and to delete references in Rule 5730(b) to Existing Linked Securities. *See supra* note 4.

[6] *See* proposed Rules 5710(k)(iii)–(v).

[7] *See* introductory paragraphs to Rule 5710, as proposed to be amended.

[8] *See* proposed Rule 5710(h) (formerly Rule 5710(j)).

[9] *See* proposed Commentary .01 to Rule 5710.

[10] The Exchange has proposed to adopt generic listing standards for Linked Securities and Index-Linked Exchangeable Notes, both generic and non-generic listing standards for Currency Trust Shares, and non-generic listing standards for all other Subject Securities.

loan interest rate, LIBOR, Prime Rate, or an implied interest rate based on observed market spot and foreign currency forward rates.

Based on NASDAQ's proposed amendments to the introductory paragraphs of Rule 5710, the definition of ''Linked Securities'' in Rule 5710 would now encompass the Additional Linked Securities. Therefore, under NASDAQ's proposal, all provisions of Rule 5710 that apply to Linked Securities would now apply to the Additional Linked Securities as well.

As stated in the introductory paragraphs to Rule 5710, NASDAQ may consider for listing and trading pursuant to Rule 19b–4(e) under the Act Linked Securities (including the Additional Linked Securities) that meet the standards set forth in Rule 5710, and NASDAQ may submit a rule filing pursuant to Section 19(b)(2) of the Act to permit the listing and trading of Linked Securities (including the Additional Linked Securities) that do not otherwise meet the standards set forth in Rule 5710.

NASDAQ is not proposing any amendments to Rules 5710(a)–(f), and such provisions would apply to all Linked Securities (including the Additional Linked Securities).[11] NASDAQ has proposed to delete current Rules 5710(g) and (h) (which contain the initial listing standards for Equity Index-Linked Securities and Commodity-Linked Securities) and move the text of these two paragraphs to proposed Rules 5710(k)(i)(A) and (k)(ii)(A).[12] NASDAQ has proposed to re-number the remaining existing paragraphs of Rule 5710 to reflect the deletion of paragraphs (g) and (h). NASDAQ has proposed to update cross references throughout the existing rule text of 5710 to reflect this reorganization and renumbering, and to reflect the addition of paragraph (k) to Rule 5710 (described below).

NASDAQ is not proposing any substantive amendments to Rules 5710(i), (k), or (l), and under the proposal, such paragraphs would be renumbered as paragraphs (g), (i), and (j), respectively. Such paragraphs would apply to all Linked Securities (including the Additional Linked Securities), unless otherwise noted therein.[13]

NASDAQ has proposed to amend the current rule text relating to trading halts in Linked Securities[14] to remove references to ''Commodity-Linked Securities'' and ''Equity Index-Linked Securities'' in order to make the paragraph applicable to all Linked Securities (including the Additional Linked Securities).[15]

As discussed above, NASDAQ has proposed to move the initial listing standards for Equity Index-Linked Securities and Commodity-Linked Securities (previously in Rules 5710(g) and (h)) to new paragraph (k). New paragraph (k) of Rule 5710 would also set forth the continued listing standards for Equity Index-Linked Securities and Commodity-Linked Securities and both initial and continued listing standards for the Additional Linked Securities (as further described below).[16]

Finally, NASDAQ has proposed to add Commentary .01 to Rule 5710, which would establish certain regulatory requirements for registered Market Makers in Linked Securities. Specifically, registered Market Makers in Linked Securities would be required to file with NASDAQ, in a manner prescribed by NASDAQ, and keep current a list identifying all accounts for trading in the Reference Asset components, the commodities, currencies or futures underlying the Reference Asset components, or any derivative instruments based on the Reference Asset or based on any Reference Asset component or any physical commodity, currency or futures underlying a Reference Asset component, which the registered Market Maker may have or over which it may exercise investment discretion. No registered Market Maker in Linked Securities would be permitted to trade in the Reference Asset components, the commodities, currencies, or futures underlying the Reference Asset components, or any derivative instruments based on the Reference Asset or based on any Reference Asset component or any physical commodity or futures currency underlying a Reference Asset component, in an account in which a registered Market Maker, directly or indirectly, controls trading activities, or has a direct interest in the profits or losses thereof, which has not been reported to NASDAQ as required by the proposed Rule.[17]

In addition to the existing obligations under NASDAQ rules regarding the

[11] Rules 5710(a)–(f) set forth the following requirements:

(a) Both the issue and the issuer of such security meet the criteria for other securities set forth in Rule 5730(a), except that if the security is traded in $1,000 denominations or is redeemable at the option of holders thereof on at least a weekly basis, then no minimum number of holders and no minimum public distribution of trading units shall be required.

(b) The issue has a term of not less than one (1) year and not greater than thirty (30) years.

(c) The issue must be the non-convertible debt of the Company.

(d) The payment at maturity may or may not provide for a multiple of the direct or inverse performance of an underlying index, indexes or Reference Asset; however, in no event will a loss (negative payment) at maturity be accelerated by a multiple that exceeds twice the performance of an underlying index, indexes or Reference Asset.

(e) The Company will be expected to have a minimum tangible net worth in excess of $250,000,000 and to exceed by at least 20% the earnings requirements set forth in Rule 5405(b)(1)(A). In the alternative, the Company will be expected: (i) To have a minimum tangible net worth of $150,000,000 and to exceed by at least 20% the earnings requirement set forth in Rule 5405(b)(1)(A), and (ii) not to have issued securities where the original issue price of all the Company's other index-linked note offerings (combined with index-linked note offerings of the Company's affiliates) listed on a national securities exchange exceeds 25% of the Company's net worth.

(f) The Company is in compliance with Rule 10A–3 under the Act.

[12] *See supra* note 5.

[13] Proposed Rules 5710(g), (i) and (j) provide as follows:

(g) Maintenance and Dissemination—(i) If the index is maintained by a broker-dealer, the broker-dealer shall erect a ''firewall'' around the personnel who have access to information concerning changes and adjustments to the index and the index shall be calculated by a third party who is not a broker-dealer. (ii) Unless the Commission order applicable under paragraph (k) hereof provides otherwise, the current value of the index or the Reference Asset (as applicable) will be widely disseminated at least every 15 seconds during NASDAQ's regular market session, except as provided in the next clause (iii). (iii) The values of the following indexes need not be calculated and widely disseminated at least every 15 seconds if, after the close of trading, the indicative value of the Equity Index-Linked Security based on one or more of such indexes is calculated and disseminated to provide an updated value: CBOE S&P 500 BuyWrite Index(sm), CBOE DJIA Buy Write Index(sm), CBOE Nasdaq-100 BuyWrite Index(sm). (iv) If the value of a Linked Security is based on more than one index, then the dissemination requirement of this paragraph (g) applies to the composite value of such indexes. (v) In the case of a Commodity-Linked Security that is periodically redeemable, the indicative value of the subject Commodity-Linked Security must be calculated and widely disseminated by one or more major market data vendors on at least a 15-second basis during NASDAQ's regular market session.

* * *

(i) Surveillance Procedures. FINRA will implement on behalf of Nasdaq written surveillance procedures for Linked Securities. Nasdaq will enter into adequate comprehensive surveillance sharing agreements for non-U.S. securities, as applicable.

(j) Linked Securities will be treated as equity instruments. Furthermore, for the purpose of fee determination, Linked Securities shall be deemed and treated as Other Securities.

[14] *See* proposed Rule 5710(h) (formerly Rule 5710(j).

[15] Proposed Rule 5701(h) provides as follows:

(h) Trading Halts. In the case of Linked Securities, if the indicative value (if required to be disseminated) or the Reference Asset value is not being disseminated as required, or if the value of the index is not being disseminated as required, Nasdaq may halt trading during the day on which such interruption occurs. Nasdaq will halt trading no later than the beginning of trading following the trading day when the interruption commenced if such interruption persists at this time.

[16] *See supra* notes 4 and 5.

[17] *See* proposed Commentary .01(a) to Rule 5710.

production of books and records,[18] proposed Commentary .01(b) would further require registered Market Makers in Linked Securities to make available to NASDAQ such books, records, or other information pertaining to transactions by such entity or any limited partner, officer, or approved person thereof, registered or nonregistered employee affiliated with such entity for its or their own accounts in the Reference Asset components, the commodities, currencies or futures underlying the Reference Asset components, or any derivative instruments based on the Reference Asset or based on any Reference Asset component or any physical commodity, currency or futures underlying a Reference Asset component, as may be requested by NASDAQ.

Proposed Commentary .01 to Rule 5710 is based on, and is substantively identical to, Commentary .01 to NYSE Arca Equities Rule 5.2(j)(6) (''Equity Index-Linked Securities, Commodity-Linked Securities, Currency-Linked Securities, Fixed Income Index-Linked Securities, Futures-Linked Securities and Multifactor Index-Linked Securities'').

1. Equity Index-Linked Securities

Proposed Rule 5710(k)(i)(A) would set forth the initial listing criteria for Equity Index-Linked Securities, which are currently found in Rule 5710(g).[19] NASDAQ has not proposed any substantive changes to its initial listing criteria for Equity Index-Linked Securities.[20]

Proposed Rule 5710(k)(i)(B) would contain continued listing standards for Equity Index-Linked Securities. Under the proposal, NASDAQ would commence delisting or removal proceedings (unless the Commission has approved the continued trading of the subject Equity Index-Linked Security), if any of the initial listing standards are not continuously maintained, except that: (i) the criteria that no single component represent more than 25% of the dollar weight of the index and the five highest dollar weighted components in the index cannot represent more than 50% (or 60% for indexes with less than 25 components) of the dollar weight of the index, need only be satisfied at the time the index is rebalanced; and (ii) component stocks that in the aggregate account for at least 90% of the weight of the index each shall have a minimum global monthly trading volume of 500,000 shares, or minimum global notional volume traded per month of $12,500,000, averaged over the last six months.[21]

In connection with an Equity Index-Linked Security that is listed pursuant to proposed Rule 5710(k)(i)(A)(1), NASDAQ would commence delisting or removal proceedings (unless the Commission has approved the continued trading of the subject Equity Index-Linked Security) if an underlying index or indexes fails to satisfy the maintenance standards or conditions for such index or indexes as set forth by the Commission in its order under Section 19(b)(2) of the Act approving the index or indexes for the trading of options or other derivatives.[22]

Additionally, NASDAQ would commence delisting or removal proceedings (unless the Commission has approved the continued trading of the subject Equity Index-Linked Security), under any of the following circumstances:

- If the aggregate market value or the principal amount of the Equity Index-Linked Securities publicly held is less than $400,000;
- If the value of the index or composite value of the indexes is no longer calculated or widely disseminated on at least a 15-second basis with respect to indexes containing only securities listed on a national securities exchange, or on at least a 60-second basis with respect to indexes containing foreign country securities, provided, however, that, if the official index value does not change during some or all of the period when trading is occurring on NASDAQ (for example, for indexes of foreign country securities, because of time zone differences or holidays in the countries where such indexes' component stocks trade) then the last calculated official index value must remain available throughout NASDAQ trading hours; or
- If such other event shall occur or condition exists which in the opinion of NASDAQ makes further dealings on NASDAQ inadvisable.[23]

Finally, the proposed rule provides that indexes underlying Equity Index-Linked Securities would be rebalanced at least annually.[24]

The proposed continued listing criteria for Equity Index-Linked Securities are based on, and substantively identical to, NYSE Arca Equities Rule 5.2(j)(6)(B)(I)(2) (''Equity Index-Linked Securities Listing Standards—Continued Listing Criteria'').[25]

[18] *See, e.g.,* NASDAQ Rule 4625.

[19] As discussed above, Rule 5710(g) would be deleted and replaced in its entirety by proposed Rule 5710(k)(i)(A).

[20] Proposed Rule 5710(k)(i)(A) (formerly Rule 5710(g)) provides as follows:

(A) In the case of an Equity Index-Linked Security, each underlying index is required to have at least ten (10) component securities. In addition, the index or indexes to which the security is linked shall either:

(1) Have been reviewed and approved for the trading of options or other derivatives by the Commission under Section 19(b)(2) of the Act and rules thereunder and the conditions set forth in the Commission's approval order, including comprehensive surveillance sharing agreements for non-U.S. stocks, continue to be satisfied, or

(2) The index or indexes meet the following criteria:

(a) Each component security has a minimum market value of at least $75 million, except that for each of the lowest weighted component securities in the index that in the aggregate account for no more than 10% of the weight of the index, the market value can be at least $50 million;

(b) Each component security shall have trading volume in each of the last six months of not less than 1,000,000 shares, except that for each of the lowest weighted component securities in the index that in the aggregate account for no more than 10% of the weight of the index, the trading volume shall be at least 500,000 shares in each of the last six months;

(c) Indexes based upon the equal-dollar or modified equal-dollar weighting method will be rebalanced at least semiannually;

(d) In the case of a capitalization-weighted or modified capitalization-weighted index, the lesser of the five highest weighted component securities in the index or the highest weighted component securities in the index that in the aggregate represent at least 30% of the total number of component securities in the index, each have an average monthly trading volume of at least 2,000,000 shares over the previous six months;

(e) No underlying component security will represent more than 25% of the weight of the index, and the five highest weighted component securities in the index do not in the aggregate account for more than 50% of the weight of the index (60% for an index consisting of fewer than 25 component securities);

(f) 90% of the index's numerical value and at least 80% of the total number of component securities will meet the then current criteria for standardized option trading on a national securities exchange or a national securities association, provided, however, that an index will not be subject to this requirement if (a) no underlying component security represents more than 10% of the dollar weight of the index and (b) the index has a minimum of 20 components; and

(g) All component securities shall be either (A) securities (other than securities of a foreign issuer and American Depository Receipts (''ADRs'')) that are (i) issued by a 1934 Act reporting company or by an investment company registered under the Investment Company Act of 1940 that, in each case, has securities listed on a national securities exchange and (ii) an ''NMS stock'' (as defined in Rule 600 of Regulation NMS under the Act), or (B) securities of a foreign issuer or ADRs, provided that securities of a foreign issuer (including when they underlie ADRs) whose primary trading market outside the United States is not a member of the Intermarket Surveillance Group (''ISG'') or a party to a comprehensive surveillance sharing agreement with Nasdaq will not in the aggregate represent more than 20% of the dollar weight of the index.

[21] *See* proposed Rule 5710(k)(i)(B)(1).

[22] *See* proposed Rule 5710(k)(i)(B)(2).

[23] *See* proposed Rule 5710(k)(i)(B)(3).

[24] *See* proposed Rule 5710(k)(i)(B)(4).

[25] Consistent with its proposal to conform the continued listing requirements applicable to Equity Index-Linked Securities to those of NYSE Arca and

2. Commodity-Linked Securities

Proposed Rule 5710(k)(ii)(A) would set forth the initial listing criteria for Commodity-Linked Securities, which are currently found in Rule 5710(h).[26] NASDAQ has not proposed any substantive changes to its initial listing criteria for Commodity-Linked Securities.[27]

Proposed Rule 5710(k)(ii)(B) would establish new continued listing standards for Commodity-Linked Securities. NASDAQ would commence delisting or removal proceedings if any of the initial listing criteria are not continuously maintained.[28] Additionally, NASDAQ would commence delisting or removal proceedings under any of the following circumstances:

- If the aggregate market value or the principal amount of the Commodity-Linked Securities publicly held is less than $400,000;
- If the value of the Commodity Reference Asset is no longer calculated or available and a new Commodity Reference Asset is substituted, unless the new Commodity Reference Asset meets the requirements of the proposed rule; or
- If such other event shall occur or condition exists which in the opinion of NASDAQ makes further dealings on NASDAQ inadvisable.[29]

The proposed continued listing standards for Commodity-Linked Securities are based on, and substantively identical to, NYSE Arca Equities Rule 5.2(j)(6)(B)(II)(2) (''Commodity-Linked Securities Listing Standards'').[30]

3. Fixed Income Index-Linked Securities

Proposed Rule 5710(k)(iii) would establish initial and continued listing standards for Fixed Income Index-Linked Securities.

Proposed Rule 5710(k)(iii)(A) provides that either: (i) The Fixed Income Reference Asset to which the security is linked shall have been reviewed and approved for the trading of options, Index Fund Shares, or other derivatives by the Commission under Section 19(b)(2) of the Act and rules thereunder and the conditions set forth in the Commission's approval order continue to be satisfied; or (ii) the issue must meet the following initial listing criteria:

- Components of the Fixed Income Reference Asset that in the aggregate account for at least 75% of the weight of the Fixed Income Reference Asset must each have a minimum original principal amount outstanding of $100 million or more;
- A component of the Fixed Income Reference Asset may be a convertible security; however, once the convertible security component converts to the underlying equity security, the component is removed from the Fixed Income Reference Asset;
- No component of the Fixed Income Reference Asset (excluding Treasury Securities and GSE Securities) will represent more than 30% of the dollar weight of the Fixed Income Reference Asset, and the five highest dollar weighted components in the Fixed Income Reference Asset will not in the aggregate account for more than 65% of the dollar weight of the Fixed Income Reference Asset;
- An underlying Fixed Income Reference Asset (excluding one consisting entirely of exempted securities) must include a minimum of 13 non-affiliated issuers; and
- Component securities that in the aggregate account for at least 90% of the dollar weight of the Fixed Income Reference Asset must be from one of the following: (a) Issuers that are required to file reports pursuant to Sections 13 and 15(d) of the Act; or (b) issuers that have a worldwide market value of outstanding common equity held by non-affiliates of $700 million or more; or (c) issuers that have outstanding securities that are notes, bonds, debentures, or evidence of indebtedness having a total remaining principal amount of at least $1 billion; or (d) exempted securities as defined in Section 3(a)(12) of the Act; or (e) issuers that are a government of a foreign country or a political subdivision of a foreign country.

In addition, the value of the Fixed Income Reference Asset must be widely disseminated to the public by one or more major market vendors at least once per business day.[31]

Proposed Rule 5710(k)(iii)(C) provides that NASDAQ would commence delisting or removal proceedings if any of the initial listing criteria are not continuously maintained, and that NASDAQ would also commence delisting or removal proceedings if:

- The aggregate market value or the principal amount of the Fixed Income Index-Linked Securities publicly held is less than $400,000;
- The value of the Fixed Income Reference Asset is no longer calculated or available and a new Fixed Income Reference Asset is substituted, unless the new Fixed Income Reference Asset meets the requirements of proposed Rule 5710(k); or
- Such other event shall occur or condition exists which in the opinion of NASDAQ makes further dealings inadvisable.

The proposed initial and continued listing standards for Fixed-Income Linked Securities are based on, and substantively identical to, NYSE Arca Equities Rule 5.2(j)(6)(B)(IV) (''Fixed Income Index-Linked Securities Listing Standards'').

4. Futures-Linked Securities

Proposed Rule 5710(k)(iv) would establish initial and continued listing standards for Futures-Linked Securities. Proposed Rule 5710(k)(iv)(A) states that

to incorporate such requirements under proposed Rule 5710(k)(i)(B), NASDAQ has proposed to delete existing references to continued listing standards applicable to Equity Index-Linked Securities in Rule 5730(b). *See supra* notes 4 and 5.

[26] As discussed above, Rule 5710(h) would be deleted and replaced in its entirety by proposed Rule 5710(k)(ii)(A).

[27] Proposed Rule 5710(k)(ii)(A) (formerly Rule 5710(h)) provides as follows:

(A) In the case of a Commodity-Linked Security, the Reference Asset shall meet the criteria in either subparagraph (1) or subparagraph (2) below:

(1) The Reference Asset to which the security is linked shall have been reviewed and approved for the trading of Commodity-Related Securities or options or other derivatives by the Commission under Section 19(b)(2) of the Act and rules thereunder and the conditions set forth in the Commission's approval order, including with respect to comprehensive surveillance sharing agreements, continue to be satisfied.

(2) The pricing information for each component of a Reference Asset other than a Currency must be derived from a market which is an ISG member or affiliate or with which Nasdaq has a comprehensive surveillance sharing agreement. Notwithstanding the previous sentence, pricing information for gold and silver may be derived from the London Bullion Market Association. The pricing information for each component of a Reference Asset that is a Currency must be either: (1) The generally accepted spot price for the currency exchange rate in question; or (2) derived from a market of which (a) is an ISG member or affiliate or with which Nasdaq has a comprehensive surveillance sharing agreement and (b) is the pricing source for a currency component of a Reference Asset that has previously been approved by the Commission. A Reference Asset may include components representing not more than 10% of the dollar weight of such Reference Asset for which the pricing information is derived from markets that do not meet the requirements of this subparagraph (2), provided, however, that no single component subject to this exception exceeds 7% of the dollar weight of the Reference Asset. The term ''Currency,'' as used in this subparagraph, shall mean one or more currencies, or currency options, futures, or other currency derivatives, Commodity-Related Securities if their underlying Commodities are currencies or currency derivatives, or a basket or index of any of the foregoing.

[28] *See* proposed Rule 5710(k)(ii)(B)(1).

[29] *See* proposed Rule 5710(k)(ii)(B)(2).

[30] Consistent with its proposal to conform the continued listing requirements applicable to Commodity-Linked Securities to those of NYSE Arca and to incorporate such requirements under proposed Rule 5710(k)(ii)(B), NASDAQ has proposed to delete existing references to continued listing standards applicable to Commodity-Linked Securities in Rule 5730(b). *See supra* notes 4 and 5.

[31] *See* proposed Rule 5710(k)(iii)(B).

the issue must meet one of the following initial listing standards:

• The Futures Reference Asset to which the security is linked shall have been reviewed and approved for the trading of Futures-Linked Securities or options or other derivatives by the Commission under Section 19(b)(2) of the Act and rules thereunder and the conditions set forth in the Commission's approval order, including with respect to comprehensive surveillance sharing agreements, continue to be satisfied; or

• The pricing information for components of a Futures Reference Asset must be derived from a market which is a member, or an affiliate of a member, of the Intermarket Surveillance Group (''ISG''), or with which NASDAQ has a comprehensive surveillance sharing agreement. A Futures Reference Asset may include components representing not more than 10% of the dollar weight of such Futures Reference Asset for which the pricing information is derived from markets that do not meet the foregoing requirement; provided, however, that no single component subject to this exception exceeds 7% of the dollar weight of the Futures Reference Asset.

In addition, the issue must meet both of the following initial listing criteria:

• The value of the Futures Reference Asset must be calculated and widely disseminated by one or more major market data vendors on at least a 15-second basis during the Regular Market Session (as defined in NASDAQ Rule 4120); and

• In the case of Futures-Linked Securities that are periodically redeemable, the Intraday Indicative Value [32] of the subject Futures-Linked Securities must be calculated and widely disseminated by NASDAQ or one or more major market data vendors on at least a 15-second basis during the Regular Market Session.[33]

Proposed Rule 5710(k)(iv)(C) states that NASDAQ would commence delisting or removal proceedings if any of the initial listing criteria are not continuously maintained, and that NASDAQ would also commence delisting or removal proceedings under any of the following circumstances:

• If the aggregate market value or the principal amount of the Futures-Linked Securities publicly held is less than $400,000;

• If the value of the Futures Reference Asset is no longer calculated or available and a new Futures Reference Asset is substituted, unless the new Futures Reference Asset meets the requirements of proposed Rule 5710(k); or

• If such other event shall occur or condition exists which in the opinion of NASDAQ makes further dealings on NASDAQ inadvisable.

The proposed initial and continued listing standards for Futures-Linked Securities are based on, and substantively identical to, NYSE Arca Equities Rule 5.2(j)(6)(B)(V) (''Futures-Linked Securities Listing Standards'').

5. Multifactor Index-Linked Securities

Proposed Rule 5710(k)(v) would establish initial and continued listing standards for Multifactor Index-Linked Securities. Proposed Rule 5710(k)(v)(A) states that the issue must meet one of the following initial listing standards:

• Each component of the Multifactor Reference Asset to which the security is linked shall have been reviewed and approved for the trading of either options, Index Fund Shares, or other derivatives under Section 19(b)(2) of the Act and rules thereunder and the conditions set forth in the Commission's approval order continue to be satisfied; or

• Each Reference Asset included in the Multifactor Reference Asset must meet the applicable initial and continued listing criteria set forth in the relevant subsection of proposed Rule 5710(k).

In addition, proposed Rule 5710(k)(v)(B) provides that the issue must meet both of the following additional initial listing criteria:

• The value of the Multifactor Reference Asset must be calculated and widely disseminated to the public on at least a 15-second basis during the time the Multifactor Index-Linked Security trades on NASDAQ; and

• In the case of Multifactor Index-Linked Securities that are periodically redeemable, the Intraday Indicative Value of the Multifactor Index-Linked Securities must be calculated and widely disseminated by one or more major market data vendors on at least a 15-second basis during the time the Multifactor Index-Linked Securities trade on NASDAQ.

Proposed Rule 5710(k)(v)(C) states that NASDAQ would commence delisting or removal proceedings if:

• Any of the initial listing criteria described above are not continuously maintained;

• The aggregate market value or the principal amount of the Multifactor Index-Linked Securities publicly held is less than $400,000;

• The value of the Multifactor Reference Asset is no longer calculated or available and a new Multifactor Reference Asset is substituted, unless the new Multifactor Reference Asset meets the requirements of proposed Rule 5710(k); or

• Such other event shall occur or condition exists which in the opinion of NASDAQ makes further dealings on NASDAQ inadvisable.

The proposed initial and continued listing standards for Multifactor Index-Linked Securities are based on, and substantively identical to, NYSE Arca Equities Rule 5.2(j)(6)(B)(VI) (''Multifactor Index-Linked Securities Listing Standards'').

B. Proposed Rule 5711—Trading of Certain Derivative Securities

NASDAQ has proposed to adopt new Rule 5711 (''Trading of Certain Derivative Securities''), which would set forth listing standards for the following securities: Index-Linked Exchangeable Notes; Equity Gold Shares; Trust Certificates; Commodity-Based Trust Shares; Currency Trust Shares; Commodity Index Trust Shares; Commodity Futures Trust Shares; Partnership Units; Trust Units; Managed Trust Securities; and Currency Warrants.

1. Index-Linked Exchangeable Notes

Proposed Rule 5711(a) would adopt generic listing standards for Index-Linked Exchangeable Notes. Index-Linked Exchangeable Notes are exchangeable debt securities that are exchangeable at the option of the holder (subject to the requirement that the holder in most circumstances exchange a specified minimum amount of notes), on call by the issuer, or at maturity for a cash amount (''Cash Value Amount'') based on the reported market prices of the underlying stocks of an underlying index.[34]

Index-Linked Exchangeable Notes would be considered for listing and trading by NASDAQ pursuant to Rule 19b–4(e) under the Act,[35] provided:

• Both the issue and the issuer of such security meet the requirements of NASDAQ Rule 5730 (''Listing Requirements for Securities Not Specified Above (Other Securities)''), except that the minimum public distribution shall be 150,000 notes with a minimum of 400 public note-holders, except, if traded in thousand dollar denominations or redeemable at the option of the holders thereof on at least a weekly basis, then no minimum

[32] The ''Intraday Indicative Value'' is an estimate of the value of a share of each series of a particular security.

[33] *See* proposed Rule 5710(k)(iv)(B).

[34] *See* proposed Rule 5711(a).

[35] 17 CFR 240.19b–4(e).

public distribution and no minimum number of holders.[36]

• The issue has a minimum term of one year.[37]

• The issuer will be expected to have a minimum tangible net worth in excess of $250,000,000, and to otherwise substantially exceed the earnings requirements set forth in NASDAQ Rule 5405(b).[38] In the alternative, the issuer will be expected: (i) to have a minimum tangible net worth of $150,000,000 and to otherwise substantially exceed the earnings requirements set forth in Rule 5405(b); and (ii) not to have issued Index-Linked Exchangeable Notes where the original issue price of all the issuer's other Index-Linked Exchangeable Note offerings (combined with other Index-Linked Exchangeable Note offerings of the issuer's affiliates) listed on a national securities exchange exceeds 25% of the issuer's net worth.[39]

• The index to which an Index-Linked Exchangeable Note is linked shall either be (i) indices that have been created by a third party and been reviewed and have been approved for the trading of options or other derivatives securities (each, a ''Third-Party Index'') either by the Commission under Section 19(b)(2) of the Act and rules thereunder or by NASDAQ under rules adopted pursuant to Rule 19b–4(e); or (ii) indices which the issuer has created and for which NASDAQ will have obtained approval from either the Commission pursuant to Section 19(b)(2) and rules thereunder or from NASDAQ under rules adopted pursuant to Rule 19b–4(e) (each, an ''Issuer Index''). The Issuer Indices and their underlying securities must meet one of the following: (A) The procedures and criteria set forth in Nasdaq Options Market (''NOM'') Rules, Chapter XIV, Section 6(b) and (c); or (B) the criteria set forth in NASDAQ Rules 5715(b)(3) and (4), the index concentration limits set forth in NOM Rules, Chapter XIV, Section 6, and NOM Rules, Chapter XIV, Section 6(b)(12) insofar as it relates to NOM Rules, Chapter XIV, Section 6(b)(6).[40]

Index-Linked Exchangeable Notes would be treated as equity instruments.[41] The Intraday Indicative Value of each series of Index-Linked Exchangeable Notes would be required to be calculated and widely disseminated by NASDAQ or one or more major market data vendors on at least a 15-second basis during the Regular Market Session.[42] In addition, the value of the underlying index must also be publicly disseminated to investors, on a real time basis, every 15 seconds.[43]

Beginning twelve months after the initial issuance of a series of Index-Linked Exchangeable Notes, NASDAQ would consider the suspension of trading in or removal from listing of that series of Index-Linked Exchangeable Notes under any of the following circumstances:

• If the series has fewer than 50,000 notes issued and outstanding;

• If the market value of all Index-Linked Exchangeable Notes of that series issued and outstanding is less than $1,000,000; or

• If such other event shall occur or such other condition exists which in the opinion of NASDAQ makes further dealings of NASDAQ inadvisable.[44]

The proposed listing requirements relating to Index-Linked Exchangeable Notes are based on, and substantively identical to, NYSE Arca Equities Rule 5.2(j)(4) (''Index-Linked Exchangeable Notes'').

2. Equity Gold Shares

Proposed Rule 5711(b) would establish listing standards for Equity Gold Shares that represent units of fractional undivided beneficial interest in, and ownership of, the Equity Gold Trust. While Equity Gold Shares are not technically ''Index Fund Shares,'' and thus are not covered by NASDAQ Rule 5705, all other NASDAQ rules that reference ''Index Fund Shares'' shall also apply to Equity Gold Shares.[45]

Except to the extent that specific provisions in proposed Rule 5711(b) govern, or unless the context otherwise requires, the provisions of all other NASDAQ Rules and policies would be applicable to the trading of Equity Gold Shares on NASDAQ.[46] In addition, the requirements set forth in proposed Rule 5711(d) relating to Commodity-Based Trust Shares would also apply to Equity Gold Shares.[47]

The proposed listing requirements relating to Equity Gold Shares are based on, and substantively identical to, NYSE Arca Equities Rule 5.2(j)(5) (''Equity Gold Shares'').

3. Trust Certificates

Under proposed Rule 5711(c), NASDAQ may consider for trading, whether by listing or pursuant to unlisted trading privileges, Trust Certificates. Trust Certificates represent an interest in a special purpose trust created pursuant to a trust agreement. The trust will only issue Trust Certificates. Trust Certificates may or may not provide for the repayment of the original principal investment amount. Trust Certificates pay an amount at maturity which is based upon the performance of specified assets as set forth below:

• An underlying index or indexes of equity securities (''Trust Certificate Equity Reference Asset'');

• Instruments that are direct obligations of the issuing company, either exercisable throughout their life (*i.e.,* American style) or exercisable only on their expiration date (*i.e.,* European style), entitling the holder to a cash settlement in U.S. dollars to the extent that the foreign or domestic index has declined below (for a put warrant) or increased above (for a call warrant) the pre-stated cash settlement value of the index (''Index Warrants''); or

• A combination of two or more Trust Certificate Equity Reference Assets or Index Warrants.[48]

NASDAQ would file separate proposals under Section 19(b) of the Act before trading, either by listing or pursuant to unlisted trading privileges, Trust Certificates.[49]

Pursuant to proposed Commentary .01 to Rule 5711(c), NASDAQ would commence delisting or removal proceedings with respect to an issue of Trust Certificates (unless the Commission has approved the continued trading of such issue), under any of the following circumstances:

• If the aggregate market value or the principal amount of the securities publicly held is less than $400,000;

• If the value of the index or composite value of the indexes is no longer calculated or widely disseminated on at least a 15-second basis with respect to indexes containing only securities listed on a national securities exchange, or on at least a 60-second basis with respect to indexes containing foreign country securities; provided, however, that, if the official index value does not change during some or all of the period when trading is occurring on the NASDAQ Stock

[36] *See* proposed Rule 5711(a)(i).

[37] *See* proposed Rule 5711(a)(ii).

[38] Rule 5405(b) sets forth initial listing standards for primary equity securities.

[39] *See* proposed Rule 5711(a)(iii).

[40] *See* proposed Rule 5711(a)(iv).

[41] *See* proposed Rule 5711(a)(v).

[42] *See* proposed Rule 5711(a)(vi). The term ''Intraday Indicative Value'' means an estimate of the value of a note or a share of the series of Index-Linked Exchangeable Notes. *Id.*

[43] *See* proposed Rule 5711(a)(vii). The term ''Intraday Indicative Value'' means an estimate of the value of a note or a share of the series of Index-Linked Exchangeable Notes. *Id.*

[44] *See* proposed Rule 5711(a)(viii).

[45] *See* proposed Rule 5711(b)(i).

[46] *See* proposed Rule 5711(b)(ii).

[47] *See* proposed Rule 5711(b)(iii).

[48] *See* proposed Rule 5711(c)(i).

[49] *See* proposed Rule 5711(c)(ii).

Market (for example, for indexes of foreign country securities, because of time zone differences or holidays in the countries where such indexes' component stocks trade) then the last calculated official index value must remain available throughout NASDAQ trading hours; or

• If such other event shall occur or condition exists which in the opinion of NASDAQ makes further dealings on NASDAQ inadvisable.

Proposed Commentary .02 to Rule 5711(c) provides that the stated term of the trust shall be as stated in the trust prospectus; however, a trust may be terminated under such earlier circumstances as may be specified in the trust prospectus.

Proposed Commentary .03 to Rule 5711(c) provides that the trustee of a trust must be a trust company or banking institution having substantial capital and surplus and the experience and facilities for handling corporate trust business. In cases where, for any reason, an individual has been appointed as trustee, a qualified trust company or banking institution must be appointed co-trustee. In addition, no change is to be made in the trustee of a listed issue without prior notice to and approval of NASDAQ.

Proposed Commentary .04 to Rule 5711(c) provides that voting rights would be as set forth in the applicable trust prospectus.

Proposed Commentary .05 to Rule 5711(c) provides that NASDAQ would implement written surveillance procedures for Trust Certificates.

Proposed Commentary .06 to Rule 5711(c) provides that the Trust Certificates would be subject to NASDAQ's equity trading rules.

Proposed Commentary .07 to Rule 5711(c) provides that prior to the commencement of trading of a particular Trust Certificates listing pursuant to proposed Rule 5711(c), NASDAQ will evaluate the nature and complexity of the issue and, if appropriate, distribute a circular to Members providing guidance regarding compliance responsibilities (including suitability recommendations and account approval) when handling transactions in Trust Certificates.

Proposed Commentary .08 to Rule 5711(c) provides that Trust Certificates may be exchangeable at the option of the holder into securities that participate in the return of the applicable underlying asset. In the event that the Trust Certificates are exchangeable at the option of the holder and contain an Index Warrant, then a Member must ensure that the Member's account is approved for options trading in accordance with the rules of the NOM in order to exercise such rights.

Proposed Commentary .09 to Rule 5711(c) provides that Trust Certificates may pass-through periodic payments of interest and principle of the underlying securities.

Proposed Commentary .10 to Rule 5711(c) provides that the trust payments may be guaranteed pursuant to a financial guaranty insurance policy which may include swap agreements.

Proposed Commentary .11 to Rule 5711(c) provides that the Trust Certificates may be subject to early termination or call features.

The proposed standards relating to Trust Certificates are based on, and substantively identical to, NYSE Arca Equities Rule 5.2(j)(7) (''Trust Certificates'').

4. Commodity-Based Trust Shares

Pursuant to proposed Rule 5711(d), NASDAQ may consider for trading, whether by listing or pursuant to unlisted trading privileges, of Commodity-Based Trust Shares that meet the criteria of the rule.[50] The term ''Commodity-Based Trust Shares'' is defined as a security (i) that is issued by a trust that holds a specified commodity deposited with the trust; (ii) that is issued by such trust in a specified aggregate minimum number in return for a deposit of a quantity of the underlying commodity; and (iii) that, when aggregated in the same specified minimum number, may be redeemed at a holder's request by such trust which will deliver to the redeeming holder the quantity of the underlying commodity.[51] NASDAQ may trade, either by listing or pursuant to unlisted trading privileges, Commodity-Based Trust Shares based on an underlying commodity, and each issue of a Commodity-Based Trust Share would be designated as a separate series and would be identified by a unique symbol.[52]

Under the proposal, NASDAQ would establish a minimum number of Commodity-Based Trust Shares required to be outstanding at the time of commencement of trading on NASDAQ.[53] Following the initial 12-month period following commencement of trading on NASDAQ of Commodity-Based Trust Shares, NASDAQ would consider the suspension of trading in or removal from listing of such series under any of the following circumstances:

• If the trust has more than 60 days remaining until termination and there are fewer than 50 record and/or beneficial holders of Commodity-Based Trust Shares for 30 or more consecutive trading days;

• If the trust has fewer than 50,000 receipts issued and outstanding;

• If the market value of all receipts issued and outstanding is less than $1,000,000;

• If the value of the underlying commodity is no longer calculated or available on at least a 15-second delayed basis from a source unaffiliated with the sponsor, trust, custodian or NASDAQ or NASDAQ stops providing a hyperlink on its Web site to any such unaffiliated commodity value;

• If the Intraday Indicative Value is no longer made available on at least a 15-second delayed basis; or

• If such other event shall occur or condition exists which in the opinion of NASDAQ makes further dealings on NASDAQ inadvisable.[54]

Upon termination of a trust, NASDAQ requires that Commodity-Based Trust Shares issued in connection with such entity trust be removed from NASDAQ listing. A trust may terminate in accordance with the provisions of the trust prospectus, which may provide for termination if the value of the trust falls below a specified amount.[55]

Proposed Rule 5711(d)(v)(C) provides that the stated term of the trust shall be as stated in the trust prospectus; however, a trust may be terminated under such earlier circumstances as may be specified in the trust prospectus.

Proposed Rule 5711(d)(v)(D) provides that the trustee of a trust must be a trust company or banking institution having substantial capital and surplus and the experience and facilities for handling corporate trust business. In cases where, for any reason, an individual has been appointed as trustee, a qualified trust company or banking institution must be appointed co-trustee. In addition, no change is to be made in the trustee of a listed issue without prior notice to and approval of NASDAQ.

[50] Proposed Rule 5711(d) would be applicable only to Commodity-Based Trust Shares. Except to the extent inconsistent with this Rule, or unless the context otherwise requires, the provisions of the trust issued receipts rules, Bylaws, and all other rules and procedures of the Board of Directors shall be applicable to the trading on NASDAQ of such securities. Commodity-Based Trust Shares are included within the definition of ''security'' or ''securities'' as such terms are used in the Bylaws and Rules of NASDAQ. *See* proposed Rule 5711(d)(ii).

[51] *See* proposed Rule 5711(d)(iii)(A). The term ''commodity'' is defined in Section 1(a)(4) of the Commodity Exchange Act (''CEA''). *See* proposed Rule 5711(d)(iii)(B).

[52] *See* proposed Rule 5711(d)(iv).

[53] *See* proposed Rule 5711(d)(v)(A).

[54] *See* proposed Rule 5711(d)(v)(B).

[55] *Id.*

Proposed Rule 5711(d)(v)(E) provides that voting rights shall be as set forth in the applicable trust prospectus.

Proposed Rules 5711(d)(vi) and (vii) set forth the limitation of NASDAQ liability and requirements for Market Makers in Commodity-Based Trust Shares (see ''General Provisions—Limitation of Nasdaq Liability'' and ''General Provisions—Market Maker Accounts'' below for a description of these requirements).

Proposed Commentary .01 to Rule 5711(d) provides that a Commodity-Based Trust Share is a Trust Issued Receipt that holds a specified commodity deposited with the trust.

Proposed Commentary .02 to Rule 5711(d) requires that Members provide all purchasers of newly issued Commodity-Based Trust Shares a prospectus for the series of Commodity-Based Trust Shares.

Proposed Commentary .03 to Rule 5711(d) provides that transactions in Commodity-Based Trust Shares would occur during the trading hours specified in NASDAQ Rule 4120.

Proposed Commentary .04 to Rule 5711(d) provides that NASDAQ would file separate proposals under Section 19(b) of the Act before the listing and/or trading of Commodity-Based Trust Shares.

The proposed requirements relating to Commodity-Based Trust Shares are based on, and substantively identical to, NYSE Arca Equities Rule 8.201 (''Commodity-Based Trust Shares'').

5. Currency Trust Shares

Proposed Rule 5711(e) would permit the listing and trading, or trading pursuant to unlisted trading privileges, on NASDAQ of Currency Trust Shares that meet the criteria of the rule.[56] The term ''Currency Trust Shares'' as used in the proposed rule means, unless the context otherwise requires, a security that: (i) Is issued by a trust that holds a specified non-U.S. currency or currencies deposited with the trust; (ii) when aggregated in some specified minimum number may be surrendered to the trust by an Authorized Participant (as defined in the trust's prospectus) to receive the specified non-U.S. currency or currencies; and (iii) pays beneficial owners interest and other distributions on the deposited non-U.S. currency or currencies, if any, declared and paid by the trust.[57] NASDAQ may trade, either by listing or pursuant to unlisted trading privileges, Currency Trust Shares that hold a specified non-U.S. currency or currencies, and each issue of Currency Trust Shares would be designated as a separate series and shall be identified by a unique symbol.[58]

Under the proposal, NASDAQ would establish a minimum number of Currency Trust Shares required to be outstanding at the time of commencement of trading on NASDAQ.[59] Following the initial 12-month period following commencement of trading on NASDAQ of Currency Trust Shares, NASDAQ would consider the suspension of trading in or removal from listing of such series under any of the following circumstances:

- If the trust has more than 60 days remaining until termination and there are fewer than 50 record and/or beneficial holders of Currency Trust Shares for 30 or more consecutive trading days;
- If the trust has fewer than 50,000 Currency Trust Shares issued and outstanding;
- If the market value of all Currency Trust Shares issued and outstanding is less than $1,000,000;
- If the value of the applicable non-U.S. currency is no longer calculated or available on at least a 15-second delayed basis from a source unaffiliated with the sponsor, trust, custodian or NASDAQ or NASDAQ stops providing a hyperlink on its Web site to any such unaffiliated applicable non-U.S. currency value;
- If the Intraday Indicative Value is no longer made available on at least a 15-second delayed basis; or
- If such other event shall occur or condition exists which in the opinion of NASDAQ makes further dealings on NASDAQ inadvisable.[60]

Upon termination of a trust, NASDAQ would require that Currency Trust Shares issued in connection with such entity trust be removed from NASDAQ listing. A trust may terminate in accordance with the provisions of the trust prospectus, which may provide for termination if the value of the trust falls below a specified amount.[61]

Proposed Rule 5711(e)(v)(C) provides that the stated term of the trust shall be as stated in the trust prospectus; however, a trust may be terminated under such earlier circumstances as may be specified in the trust prospectus.

Proposed Rule 5711(e)(v)(D) provides that the trustee of a trust must be a trust company or banking institution having substantial capital and surplus and the experience and facilities for handling corporate trust business. In cases where, for any reason, an individual has been appointed as trustee, a qualified trust company or banking institution must be appointed co-trustee. In addition, no change is to be made in the trustee of a listed issue without prior notice to and approval of NASDAQ.

Proposed Rule 5711(e)(v)(E) provides that voting rights shall be as set forth in the applicable trust prospectus.

Proposed Rules 5711(e)(vi) and (vii) set forth the limitation of NASDAQ liability and requirements for Market Makers in Currency Trust Shares (see ''General Provisions—Limitation of Nasdaq Liability'' and ''General Provisions—Market Maker Accounts'' below for a description of these requirements).

NASDAQ may submit a rule filing pursuant to Section 19(b)(2) of the Act to permit the listing and trading of Currency Trust Shares that do not otherwise meet the standards set forth in Commentary .04 to proposed Rule 5711(e).[62]

Proposed Commentary .01 to Rule 5711(e) states that a Currency Trust Share is a Trust Issued Receipt that holds a specified non-U.S. currency or currencies deposited with the Trust.

Proposed Commentary .02 to Rule 5711(e) requires that Members provide all purchasers of newly issued Currency Trust Shares a prospectus for the series of Currency Trust Shares.

Proposed Commentary .03 to Rule 5711(e) provides that transactions in Currency Trust Shares would occur during the trading hours specified in NASDAQ Rule 4120.

Proposed Commentary .04 to Rule 5711(e) provides that NASDAQ may approve an issue of Currency Trust Shares for listing and/or trading (including pursuant to unlisted trading privileges) pursuant to Rule 19b–4(e) under the Act if such issue satisfies the criteria set forth in the proposed Rule 5711(e), together with the following criteria:

- A minimum of 100,000 shares of a series of Currency Trust Shares is required to be outstanding at commencement of trading (this is not required for issues trading pursuant to unlisted trading privileges);
- The value of the applicable non-U.S. currency, currencies or currency index must be disseminated by one or

[56] Proposed Rule 5711(e) would be applicable only to Currency Trust Shares. Except to the extent inconsistent with the proposed Rule, or unless the context otherwise requires, the provisions of the trust issued receipts rules, Bylaws, and all other rules and procedures of the Board of Directors shall be applicable to the trading on NASDAQ of such securities. Currency Trust Shares are included within the definition of ''security'' or ''securities'' as such terms are used in the Bylaws and Rules of NASDAQ. *See* proposed Rule 5711(e)(ii).

[57] *See* proposed Rule 5711(e)(iii).

[58] *See* proposed Rule 5711(e)(iv).

[59] *See* proposed Rule 5711(e)(v)(A).

[60] *See* proposed Rule 5711(e)(v)(B).

[61] *Id.*

[62] *See* proposed Rule 5711(e)(viii).

more major market data vendors on at least a 15-second delayed basis;

• The Intraday Indicative Value must be calculated and widely disseminated by NASDAQ or one or more major market data vendors on at least a 15-second basis during the Regular Market Session; and

• NASDAQ will implement written surveillance procedures applicable to Currency Trust Shares.

Proposed Commentary .05 to Rule 5711(e) states that if the value of a Currency Trust Share is based, in whole or in part, on an index that is maintained by a broker-dealer, the broker-dealer must erect a ''firewall'' around the personnel responsible for the maintenance of such index or who have access to information concerning changes and adjustments to the index, and the index shall be calculated by a third party who is not a broker-dealer. Additionally, any advisory committee, supervisory board or similar entity that advises an index licensor or administrator or that makes decisions regarding the index or portfolio composition, methodology and related matters must implement and maintain, or be subject to, procedures designed to prevent the use and dissemination of material, non-public information regarding the applicable index or portfolio.

Proposed Commentary .06 to Rule 5711(e) provides that Currency Trust Shares would be subject to NASDAQ's equity trading rules.

Proposed Commentary .07 to Rule 5711(e) states that if the Intraday Indicative Value or the value of the non-U.S. currency or currencies or the currency index applicable to a series of Currency Trust Shares is not being disseminated as required, NASDAQ may halt trading during the day on which such interruption first occurs. If such interruption persists past the trading day in which it occurred, NASDAQ would halt trading no later than the beginning of the trading day following the interruption. If NASDAQ becomes aware that the net asset value applicable to a series of Currency Trust Shares is not being disseminated to all market participants at the same time, it would halt trading in such series until such time as the net asset value is available to all market participants.

The proposed listing standards relating to Currency Trust Shares are based on, and substantively identical to, NYSE Arca Equities Rule 8.202 (''Currency Trust Shares'').

6. Commodity Index Trust Shares

Pursuant to proposed Rule 5711(f), NASDAQ would consider for trading, whether by listing or pursuant to unlisted trading privileges, Commodity Index Trust Shares that meet the criteria of the rule.[63] The term ''Commodity Index Trust Shares'' as used in the proposed rule (unless the context otherwise requires) means a security that: (i) is issued by a trust that (A) is a commodity pool as defined in the CEA and regulations thereunder, and that is managed by a commodity pool operator registered with the Commodity Futures Trading Commission (''CFTC''); and (B) holds long positions in futures contracts on a specified commodity index, or interests in a commodity pool which, in turn, holds such long positions; and (ii) when aggregated in some specified minimum number may be surrendered to the trust by the beneficial owner to receive positions in futures contracts on a specified index and cash or short term securities.[64] NASDAQ may trade, either by listing or pursuant to unlisted trading privileges, Commodity Index Trust Shares based on one or more securities, and Commodity Index Trust Shares based on particular securities would be designated as a separate series and would be identified by a unique symbol.[65]

NASDAQ would establish a minimum number of Commodity Index Trust Shares required to be outstanding at the time of commencement of trading on NASDAQ.[66] NASDAQ would consider the suspension of trading in or removal from listing of a series of Commodity Index Trust Shares under any of the following circumstances:

• Following the initial twelve-month period beginning upon the commencement of trading of the Commodity Index Trust Shares, there are fewer than 50 record and/or beneficial holders of Commodity Index Trust Shares for 30 or more consecutive trading days;

• If the value of the applicable underlying index is no longer calculated or available on at least a 15-second delayed basis from a source unaffiliated with the sponsor, the trust or the trustee of the trust;

• If the net asset value for the trust is no longer disseminated to all market participants at the same time;

• If the Intraday Indicative Value is no longer made available on at least a 15-second delayed basis; or

• If such other event shall occur or condition exists which in the opinion of NASDAQ makes further dealings on NASDAQ inadvisable.[67]

Upon termination of a trust, NASDAQ would require that Commodity Index Trust Shares issued in connection with such entity trust be removed from NASDAQ listing. A trust may terminate in accordance with the provisions of the trust prospectus, which may provide for termination if the value of the trust falls below a specified amount.[68]

Proposed Rule 5711(f)(v)(C) provides that the stated term of the trust shall be as stated in the trust prospectus; however, a trust may be terminated under such earlier circumstances as may be specified in the trust prospectus.

Proposed Rule 5711(f)(v)(D) provides that the trustee of a trust must be a trust company or banking institution having substantial capital and surplus and the experience and facilities for handling corporate trust business. In cases where, for any reason, an individual has been appointed as trustee, a qualified trust company or banking institution must be appointed co-trustee. In addition, no change is to be made in the trustee of a listed issue without prior notice to and approval of NASDAQ.

Proposed Rule 5711(f)(v)(E) provides that voting rights shall be as set forth in the applicable trust prospectus.

Proposed Rules 5711(f)(vi) and (vii) set forth the limitation of NASDAQ liability and requirements for Market Makers in Commodity Index Trust Shares (see ''General Provisions—Limitation of NASDAQ Liability'' and ''General Provisions—Market Maker Accounts'' below for a description of these requirements).

Proposed Commentary .01 to Rule 5711(f) states that a Commodity Index Trust Share is a Trust Issued Receipt that holds long positions in futures contracts on a specified commodity index, or interests in a commodity pool which, in turn, holds such long positions, deposited with the Trust.

Proposed Commentary .02 to Rule 5711(f) requires that Members provide all purchasers of newly issued Commodity Index Trust Shares a prospectus for the series of Commodity Index Trust Shares.

[63] Proposed Rule 5711(f) would be applicable only to Commodity Index Trust Shares. Except to the extent inconsistent with the proposed rule, or unless the context otherwise requires, the provisions of the Trust Issued Receipts rules, Bylaws, and all other rules and procedures of the Board of Directors shall be applicable to the trading on NASDAQ of such securities. Commodity Index Trust Shares are included within the definition of ''security'' or ''securities'' as such terms are used in the Bylaws and Rules of NASDAQ. *See* proposed Rule 5711(f)(ii).

[64] *See* proposed Rule 5711(f)(iii). The term ''futures contract'' is commonly known as a ''contract of sale of a commodity for future delivery'' as set forth in Section 2(a) of the CEA. *Id.*

[65] *See* proposed Rule 5711(f)(iv).

[66] *See* proposed Rule 5711(f)(v)(A).

[67] *See* proposed Rule 5711(f)(v)(B).

[68] *Id.*

Proposed Commentary .03 to Rule 5711(f) states that transactions in Commodity Index Trust Shares would occur during the trading hours specified in NASDAQ Rule 4120.

Proposed Commentary .04 to Rule 5711(f) states that NASDAQ would file separate proposals under Section 19(b) of the Act before trading, either by listing or pursuant to unlisted trading privileges, Commodity Index Trust Shares.

The proposed requirements relating to Commodity Index Trust Shares are based on, and substantively identical to NYSE Arca Equities Rule 8.203 (''Commodity Index Trust Shares'').

7. Commodity Futures Trust Shares

Pursuant to proposed Rule 5711(g), NASDAQ would consider for trading, whether by listing or pursuant to unlisted trading privileges, Commodity Futures Trust Shares that meet the criteria of the proposed rule.[69] The term ''Commodity Futures Trust Shares'' as used in the proposed rules means, unless the context otherwise requires, a security that: (ii) is issued by a trust that (A) is a commodity pool as defined in the CEA and regulations thereunder, and that is managed by a commodity pool operator registered with the CFTC, and (B) holds positions in futures contracts that track the performance of a specified commodity, or interests in a commodity pool which, in turn, holds such positions; and (ii) is issued and redeemed daily in specified aggregate amounts at net asset value.[70] NASDAQ may trade, either by listing or pursuant to unlisted trading privileges, Commodity Futures Trust Shares based on an underlying commodity futures contract, and each issue of Commodity Futures Trust Shares shall be designated as a separate series and shall be identified by a unique symbol.[71]

NASDAQ would establish a minimum number of Commodity Futures Trust Shares required to be outstanding at the time of commencement of trading on NASDAQ.[72] NASDAQ would consider the suspension of trading in or removal from listing of a series of Commodity Futures Trust Shares under any of the following circumstances:

- If, following the initial twelve-month period beginning upon the commencement of trading of the Commodity Futures Trust Shares: (i) the trust has fewer than 50,000 Commodity Futures Trust Shares issued and outstanding; (ii) the market value of all Commodity Futures Trust Shares issued and outstanding is less than $1,000,000; or (iii) there are fewer than 50 record and/or beneficial holders of Commodity Futures Trust Shares for 30 consecutive trading days;
- If the value of the underlying futures contracts is no longer calculated or available on at least a 15-second delayed basis during NASDAQ's Regular Market Session from a source unaffiliated with the sponsor, the trust or the trustee of the trust;
- If the net asset value for the trust is no longer disseminated to all market participants at the same time;
- If the Intraday Indicative Value is no longer disseminated on at least a 15-second delayed basis during NASDAQ's Regular Market Session; or
- If such other event shall occur or condition exists which in the opinion of NASDAQ makes further dealings on NASDAQ inadvisable.[73]

Upon termination of a trust, NASDAQ requires that Commodity Futures Trust Shares issued in connection with such trust be removed from NASDAQ listing. A trust would terminate in accordance with the provisions of the trust prospectus.[74]

Proposed Rule 5711(g)(v)(C) provides that the stated term of the trust shall be as stated in the prospectus; however, a trust may be terminated under such earlier circumstances as may be specified in the trust prospectus.

Proposed Rule 5711(g)(v)(D) provides that the trustee of a trust must be a trust company or banking institution having substantial capital and surplus and the experience and facilities for handling corporate trust business. In cases where, for any reason, an individual has been appointed as trustee, a qualified trust company or banking institution must be appointed co-trustee. In addition, no change is to be made in the trustee of a listed issue without prior notice to and approval of NASDAQ.

Proposed Rule 5711(g)(v)(E) provides that voting rights shall be as set forth in the applicable trust prospectus.

Proposed Rules 5711(g)(vi) and (vii) set forth the limitation of NASDAQ liability and requirements for Market Makers in Commodity Futures Trust Shares (see ''General Provisions—Limitation of NASDAQ Liability'' and ''General Provisions—Market Maker Accounts'' below for a description of these requirements).

Proposed Rule 5711(g)(viii) states that NASDAQ would file separate proposals under Section 19(b) of the Act before listing and trading separate and distinct Commodity Futures Trust Shares designated on different underlying futures contracts.

Proposed Commentary .01 to Rule 5711(g) would require Members trading in Commodity Futures Trust Shares to provide all purchasers of newly issued Commodity Futures Trust Shares a prospectus for the series of Commodity Futures Trust Shares.

Proposed Commentary .02 to Rule 5711(g) states that transactions in Commodity Futures Trust Shares would occur during the trading hours specified in NASDAQ Rule 4120.

Proposed Commentary .03 to Rule 5711(g) states that if the Intraday Indicative Value or the value of the underlying futures contract is not being disseminated as required, NASDAQ may halt trading during the day in which the interruption to the dissemination of the Intraday Indicative Value or the value of the underlying futures contract occurs. If the interruption to the dissemination of the Intraday Indicative Value or the value of the underlying futures contract persists past the trading day in which it occurred, NASDAQ would halt trading no later than the beginning of the trading day following the interruption.

In addition, if NASDAQ becomes aware that the net asset value with respect to a series of Commodity Futures Trust Shares is not disseminated to all market participants at the same time, it would halt trading in such series until such time as the net asset value is available to all market participants.

Proposed Commentary .04 to Rule 5711(g) states that NASDAQ's rules governing the trading of equity securities apply to Commodity Futures Trust Shares.

Proposed Commentary .05 to Rule 5711(g) states that NASDAQ would implement written surveillance procedures for Commodity Futures Trust Shares.

The proposed requirements relating to Commodity Futures Trust Shares are based on, and substantively identical to, NYSE Arca Equities Rule 8.204 (''Commodity Futures Trust Shares'').

[69] Proposed Rule 5711(g) would apply only to Commodity Futures Trust Shares. Except to the extent inconsistent with the proposed Rule, or unless the context otherwise requires, the provisions of the trust issued receipts rules, Bylaws, and all other rules and procedures of the Board of Directors shall be applicable to the trading on NASDAQ of such securities. Commodity Futures Trust Shares are included within the definition of ''security'' or ''securities'' as such terms are used in the Bylaws and Rules of NASDAQ. *See* proposed Rule 5711(g)(ii).

[70] *See* proposed Rule 5711(g)(iii). The term ''futures contract'' is a ''contract of sale of a commodity for future delivery'' set forth in Section 2(a) of the CEA. The term ''commodity'' is defined in Section 1(a)(4) of the CEA. *Id.*

[71] *See* proposed Rule 5711(g)(iv).

[72] *See* proposed Rule 5711(g)(v)(A).

[73] *See* proposed Rule 5711(g)(v)(B).

[74] *Id.*

8. Partnership Units

Pursuant to proposed Rule 5711(h), NASDAQ would consider for trading, whether by listing or pursuant to unlisted trading privileges, Partnership Units that meet the criteria of the proposed rule. The term ''Partnership Units'' for purposes of the proposed rule means a security (i) that is issued by a partnership that invests in any combination of futures contracts, options on futures contracts, forward contracts, commodities and/or securities; and (ii) that is issued and redeemed daily in specified aggregate amounts at net asset value.[75] NASDAQ may list and trade Partnership Units based on an underlying asset, commodity or security, and each issue of a Partnership Unit would be designated as a separate series and would be identified by a unique symbol.[76]

NASDAQ would establish a minimum number of Partnership Units required to be outstanding at the time of commencement of trading on NASDAQ.[77] NASDAQ would consider removing from listing Partnership Units under any of the following circumstances:

- If, following the initial twelve month period from the date of commencement of trading of the Partnership Units: (i) The partnership has more than 60 days remaining until termination and there are fewer than 50 record and/or beneficial holders of the Partnership Units for 30 or more consecutive trading days; (ii) the partnership has fewer than 50,000 Partnership Units issued and outstanding; or (iii) the market value of all Partnership Units issued and outstanding is less than $1,000,000;
- If the value of the underlying benchmark investment, commodity or asset is no longer calculated or available on at least a 15-second delayed basis or NASDAQ stops providing a hyperlink on its Web site to any such investment, commodity or asset value;
- If the Intraday Indicative Value is no longer made available on at least a 15-second delayed basis; or
- If such other event shall occur or condition exists which in the opinion of NASDAQ makes further dealings on NASDAQ inadvisable.[78]

Upon termination of a partnership, NASDAQ requires that Partnership Units issued in connection with such partnership be removed from NASDAQ listing. A partnership would terminate in accordance with the provisions of the partnership prospectus.[79]

Proposed Rule 5711(h)(iv)(C) provides that the stated term of the partnership shall be as stated in the prospectus; however, such entity may be terminated under such earlier circumstances as may be specified in the Partnership prospectus.

Proposed Rule 5711(h)(iv)(D) provides that the general partner of a partnership must be an entity having substantial capital and surplus and the experience and facilities for handling partnership business. In cases where, for any reason, an individual has been appointed as general partner, a qualified entity must also be appointed as general partner. In addition, no change is to be made in the general partner of a listed issue without prior notice to and approval of NASDAQ.

Proposed Rule 5711(h)(iv)(E) provides that voting rights shall be as set forth in the applicable partnership prospectus.

Proposed Rules 5711(h)(v) and (vi) set forth the limitation of NASDAQ liability and requirements for Market Makers in Partnership Units (see ''General Provisions—Limitation of NASDAQ Liability'' and ''General Provisions—Market Maker Accounts'' below for a description of these requirements).

Proposed Rule 5711(h)(vii) states that NASDAQ would file separate proposals under Section 19(b) of the Act before listing and trading separate and distinct Partnership Units designated on different underlying investments, commodities and/or assets.

Proposed Commentary .01 to Rule 5711(h) requires that Members provide to all purchasers of newly issued Partnership Units a prospectus for the series of Partnership Units.

The proposed requirements relating to Partnership Units are based on, and substantively identical to, NYSE Arca Equities Rule 8.300 (''Partnership Units'').

9. Trust Units

NASDAQ proposes to add new Rule 5711(i) in order to permit trading, either by listing or pursuant to unlisted trading privileges, of Trust Units.[80] As defined in the proposed rule, a ''Trust Unit'' is a security that is issued by a trust or other similar entity that is constituted as a commodity pool that holds investments comprising or otherwise based on any combination of futures contracts, options on futures contracts, forward contracts, swap contracts, commodities and/or securities.[81] Under the proposal, NASDAQ may list and trade Trust Units based on an underlying asset, commodity, security or portfolio, and each issue of a Trust Unit shall be designated as a separate series and shall be identified by a unique symbol.[82]

NASDAQ would establish a minimum number of Trust Units required to be outstanding at the time of commencement of trading on NASDAQ.[83] NASDAQ would obtain a representation from the issuer of each series of Trust Units that the net asset value per share for the series would be calculated daily and be made available to all market participants at the same time.[84]

NASDAQ would remove Trust Units from listing under any of the following circumstances:

- If following the initial twelve month period following the commencement of trading of Trust Units: (i) The trust has more than 60 days remaining until termination and there are fewer than 50 record and/or beneficial holders of Trust Units for 30 or more consecutive trading days; (ii) the trust has fewer than 50,000 Trust Units issued and outstanding; or (iii) the market value of all Trust Units issued and outstanding is less than $1,000,000; or
- If such other event shall occur or condition exists which in the opinion of the NASDAQ makes further dealings on NASDAQ inadvisable.[85]

Proposed Rule 5711(i)(iv)(B)(2) provides that NASDAQ would halt trading in a series of Trust Units if the circuit breaker parameters in NASDAQ Rule 4120(a)(11) have been reached. In exercising its discretion to halt or suspend trading in a series of Trust Units, NASDAQ may consider any relevant factors. In particular, if the portfolio and net asset value per share are not being disseminated as required, NASDAQ may halt trading during the day in which the interruption to the dissemination of the portfolio holdings or net asset value per share occurs. If the

[75] *See* proposed Rule 5711(h)(ii). The term ''commodity'' is defined in Section 1(a)(4) of the CEA. *Id.*

[76] *See* proposed Rule 5711(h)(iii).

[77] *See* proposed Rule 5711(h)(iv)(A).

[78] *See* proposed Rule 5711(h)(iv)(B).

[79] *Id.*

[80] The provisions of proposed Rule 5711(i) are applicable only to Trust Units. Except to the extent inconsistent with the proposed rule or unless the context otherwise requires, the rules and procedures of the Board of Directors shall be applicable to the trading on NASDAQ of such securities. Trust Units are included within the definition of ''security,'' ''securities'' and ''derivative securities products'' as such terms are used in the Rules of NASDAQ. *See* proposed Rule 5711(i)(i).

[81] *See* proposed Rule 5711(i)(ii). The term ''commodity'' is defined in Section 1(a)(4) of the CEA. *Id.*

[82] *See* proposed Rule 5711(i)(iii).

[83] *See* proposed Rule 5711(i)(iv)(A)(1).

[84] *See* proposed Rule 5711(i)(iv)(A)(2).

[85] *See* proposed Rule 5711(i)(iv)(B)(1).

interruption to the dissemination of the portfolio holdings or net asset value per share persists past the trading day in which it occurred, NASDAQ would halt trading no later than the beginning of the trading day following the interruption.

Upon termination of a trust, NASDAQ would require that Trust Units issued in connection with such trust be removed from NASDAQ listing. A trust would terminate in accordance with the provisions of the prospectus.[86]

Proposed Rule 5711(i)(iv)(C) provides that the stated term of the trust shall be as stated in the prospectus; however, such entity may be terminated under such earlier circumstances as may be specified in the prospectus.

Proposed Rule 5711(i)(iv)(D) provides that the trustee of a trust must be a trust company or banking institution having substantial capital and surplus and the experience and facilities for handling corporate trust business. In cases where, for any reason, an individual has been appointed as trustee, a qualified trust company or banking institution must be appointed co-trustee. In addition, no change is to be made in the trustee of a listed issue without prior notice to and approval of NASDAQ.

Proposed Rule 5711(i)(iv)(E) provides that voting rights shall be as set forth in the prospectus.

Proposed Rules 5711(i)(v) and (vi) set forth the limitation of NASDAQ liability and requirements for Market Makers in Trust Units (see ''General Provisions—Limitation of NASDAQ Liability'' and ''General Provisions—Market Maker Accounts'' below for a description of these requirements).

Proposed Commentary .01 to Rule 5711(i) requires that Members provide to all purchasers of newly issued Trust Units a prospectus for the series of Trust Units.

Proposed Commentary .02 to Rule 5711(i) states that transactions in Trust Units would occur during the trading hours specified in NASDAQ Rule 4120.

Proposed Commentary .03 to Rule 5711(i) states that NASDAQ would file separate proposals under Section 19(b) of the Act before listing and trading separate and distinct Trust Units designated on different underlying investments, commodities, assets and/or portfolios.

The proposed requirements relating to Trust Units are based on, and substantively identical to, NYSE Arca Equities Rule 8.500 (''Trust Units'').

[86] *See* proposed Rule 5711(i)(iv)(B)(2).

10. Managed Trust Securities

Pursuant to proposed Rule 5711(j), NASDAQ would consider for trading, whether by listing or pursuant to unlisted trading privileges, Managed Trust Securities that meet the criteria of the proposed rule.[87] As used in the proposed rule and unless the context otherwise requires, the term ''Managed Trust Securities'' means a security that is registered under the Securities Act of 1933, as amended, and which: (i) Is issued by a trust that (A) is a commodity pool as defined in the CEA and regulations thereunder, and that is managed by a commodity pool operator registered with the CFTC, and (B) holds long and/or short positions in exchange-traded futures contracts and/or certain currency forward contracts selected by the trust's advisor consistent with the trust's investment objectives, which would only include, exchange-traded futures contracts involving commodities, currencies, stock indices, fixed income indices, interest rates and sovereign, private and mortgage or asset backed debt instruments, and/or forward contracts on specified currencies, each as disclosed in the trust's prospectus as such may be amended from time to time; and (ii) is issued and redeemed continuously in specified aggregate amounts at the next applicable net asset value.[88] NASDAQ may trade, either by listing or pursuant to unlisted trading privileges, Managed Trust Securities based on the underlying portfolio of exchange-traded futures and/or certain currency forward contracts described in the related prospectus, and each issue of Managed Trust Securities shall be designated as a separate trust or series and shall be identified by a unique symbol.[89]

Managed Trust Securities would be listed and traded on NASDAQ subject to application of the following initial listing criteria:

- NASDAQ will establish a minimum number of Managed Trust Securities required to be outstanding at the time of commencement of trading on NASDAQ; and
- NASDAQ will obtain a representation from the issuer of each series of Managed Trust Securities that the net asset value per share for the series will be calculated daily and that the net asset value and the Disclosed Portfolio will be made available to all market participants at the same time.[90]

Under proposed Rule 5711(j)(v)(B), each series of Managed Trust Securities would be listed and traded on NASDAQ subject to application of the following continued listing criteria:

- The Intraday Indicative Value for Managed Trust Securities will be widely disseminated by one or more major market data vendors at least every 15 seconds during the time when the Managed Trust Securities trade on NASDAQ.
- The Disclosed Portfolio will be disseminated at least once daily and will be made available to all market participants at the same time.
- The Reporting Authority that provides the Disclosed Portfolio must implement and maintain, or be subject to, procedures designed to prevent the use and dissemination of material non-public information regarding the actual components of the portfolio.[91]

[87] Proposed Rule 5711(j) would apply only to Managed Trust Securities. Managed Trust Securities are included within the definition of ''security'' or ''securities'' as such terms are used in the Bylaws and Rules of NASDAQ. *See* proposed Rule 5711(j)(ii).

[88] *See* proposed Rule 5711(j)(iii)(A). Proposed Rule 5711(j)(iii) includes the following additional definitions concerning Managed Trust Securities:

- The term ''Disclosed Portfolio'' means the identities and quantities of the securities and other assets held by the trust that will form the basis for the trust's calculation of net asset value at the end of the business day. *See* proposed Rule 5711(j)(iii)(B).
- The term ''Intraday Indicative Value'' is the estimated indicative value of a Managed Trust Security based on current information regarding the value of the securities and other assets in the Disclosed Portfolio. *See* proposed Rule 5711(j)(iii)(C).
- The term ''Reporting Authority'' in respect of a particular series of Managed Trust Securities means NASDAQ, an institution, or a reporting or information service designated by NASDAQ or by the trust or the exchange that lists a particular series of Managed Trust Securities (if NASDAQ is trading such series pursuant to unlisted trading privileges) as the official source for calculating and reporting information relating to such series, including, but not limited to, the Intraday Indicative Value, the Disclosed Portfolio, the amount of any cash distribution to holders of Managed Trust Securities, net asset value, or other information relating to the issuance, redemption or trading of Managed Trust Securities. A series of Managed Trust Securities may have more than one Reporting Authority, each having different functions. *See* proposed Rule 5711(j)(iii)(D).

[89] *See* proposed Rule 5711(j)(iv).

[90] *See* proposed Rule 5711(j)(v)(A). The term ''Disclosed Portfolio'' means the identities and quantities of the securities and other assets held by the trust that will form the basis for the trust's calculation of net asset value at the end of the business day. *See* proposed Rule 5711(j)(iii)(B).

[91] The term ''Reporting Authority'' in respect of a particular series of Managed Trust Securities means NASDAQ, an institution, or a reporting or information service designated by NASDAQ or by the trust or the exchange that lists a particular series of Managed Trust Securities (if NASDAQ is trading such series pursuant to unlisted trading privileges) as the official source for calculating and reporting information relating to such series, including, but not limited to, the Intraday Indicative Value, the Disclosed Portfolio, the amount of any cash distribution to holders of Managed Trust Securities, net asset value, or other information relating to the issuance, redemption or trading of Managed Trust Securities. A series of Managed Trust Securities

Continued

Under proposed Rule 5711(j)(v)(B)(3), NASDAQ would consider the suspension of trading in or removal from listing of a series of Managed Trust Securities under any of the following circumstances:

- If, following the initial twelve-month period beginning upon the commencement of trading of the Managed Trust Securities: (i) The Trust has fewer than 50,000 Managed Trust Securities issued and outstanding; (ii) the market value of all Managed Trust Securities issued and outstanding is less than $1,000,000; or (iii) there are fewer than 50 record and/or beneficial holders of Managed Trust Securities for 30 consecutive trading days;
- If the Intraday Indicative Value for the trust is no longer calculated or available or the Disclosed Portfolio is not made available to all market participants at the same time;
- If the Trust issuing the Managed Trust Securities has failed to file any filings required by the Commission or if NASDAQ is aware that the trust is not in compliance with the conditions of any exemptive order or no-action relief granted by the Commission to the Trust with respect to the series of Managed Trust Securities; or
- If such other event shall occur or condition exists which in the opinion of NASDAQ makes further dealings on NASDAQ inadvisable.

Proposed Rule 5711(j)(v)(B)(4) provides that, if the Intraday Indicative Value of a series of Managed Trust Securities is not being disseminated as required, NASDAQ may halt trading during the day in which the interruption to the dissemination of the Intraday Indicative Value occurs. If the interruption to the dissemination of the Intraday Indicative Value persists past the trading day in which it occurred, NASDAQ would halt trading no later than the beginning of the trading day following the interruption. If a series of Managed Trust Securities is trading on NASDAQ pursuant to unlisted trading privileges, NASDAQ would halt trading in that series as specified in NASDAQ Rule 4120(a) or (b), as applicable. In addition, if NASDAQ becomes aware that the net asset value or the Disclosed Portfolio with respect to a series of Managed Trust Securities is not disseminated to all market participants at the same time, it would halt trading in such series until such time as the net asset value or the Disclosed Portfolio is available to all market participants.

Proposed Rule 5711(j)(v)(B)(5) provides that upon termination of a trust, NASDAQ requires that Managed Trust Securities issued in connection with such trust be removed from NASDAQ listing. A trust would terminate in accordance with the provisions of the trust prospectus.

Proposed Rule 5711(j)(v)(C) provides that the term of the trust shall be as stated in the prospectus; however, a trust may be terminated under such earlier circumstances as may be specified in the trust prospectus.

Proposed Rule 5711(j)(v)(D) provides that the trustee of a trust must be a trust company or banking institution having substantial capital and surplus and the experience and facilities for handling corporate trust business. In cases where, for any reason, an individual has been appointed as trustee, a qualified trust company or banking institution must be appointed co-trustee. In addition, no change is to be made in the trustee of a listed issue without prior notice to and approval of NASDAQ.

Proposed Rule 5711(j)(v)(E) provides that voting rights shall be as set forth in the applicable trust prospectus.

Proposed Rules 5711(j)(vi) and (vii) set forth the limitation of NASDAQ liability and requirements for Market Makers in Managed Trust Securities (see ''General Provisions—Limitation of NASDAQ Liability'' and ''General Provisions—Market Maker Accounts'' below for a description of these requirements).

Proposed Rule 5711(j)(viii) provides that NASDAQ would file separate proposals under Section 19(b) of the Act before listing and trading separate and distinct Managed Trust Securities.

Proposed Commentary .01 to Rule 5711(j) requires that Members provide all purchasers of newly issued Managed Trust Securities a prospectus for the series of Managed Trust Securities.

Proposed Commentary .02 to Rule 5711(j) states that transactions in Managed Trust Securities would occur during the trading hours specified in NASDAQ Rule 4120.

Proposed Commentary .03 to Rule 5711(j) states that NASDAQ's rules governing the trading of equity securities apply to Managed Trust Securities.

Proposed Commentary .04 to Rule 5711(j) states that NASDAQ would implement written surveillance procedures for Managed Trust Securities.

Proposed Commentary .05 to Rule 5711(j) states that if the trust's advisor is affiliated with a broker-dealer, the broker-dealer shall erect a ''fire wall'' around the personnel who have access to information concerning changes and adjustments to the Disclosed Portfolio. Personnel who make decisions on the trust's portfolio composition must be subject to procedures designed to prevent the use and dissemination of material nonpublic information regarding the applicable trust portfolio.

The proposed requirements relating to Managed Trust Securities are based on, and substantively identical to, NYSE Arca Equities Rule 8.700 (''Managed Trust Securities'').

11. Currency Warrants

Proposed Rule 5711(k) would govern the listing of Currency Warrants, and the proposed rule provides that the listing of Currency Warrant issues is considered on a case-by-case basis. Pursuant to proposed Rule 5711(k)(i), Currency Warrant issues would be evaluated for listing against the following criteria:

- The warrant issuer will be expected to have a minimum tangible net worth in excess of $250,000,000 and otherwise to exceed substantially the earnings requirements set forth in Rule 5405(b).[92] In the alternative, the warrant issuer will be expected: (i) To have a minimum tangible net worth of $150,000,000 and otherwise to exceed substantially the earnings requirements set forth in Rule 5405(b); and (ii) not to have issued warrants where the original issue price of all the issuer's currency warrant offerings (combined with currency warrant offerings of the issuer's affiliates) listed on a national securities exchange or traded through the facilities of NASDAQ exceeds 25% of the warrant issuer's net worth.[93]
- The term must be one to five years from date of issuance.[94]
- There must be a minimum public distribution of 1,000,000 warrants together with a minimum of 400 public holders, and an aggregate market value of $4,000,000. In the alternative, there must be a minimum public distribution of 2,000,000 warrants together with a minimum number of public warrant holders determined on a case by case basis, an aggregate market value of $12,000,000 and an initial warrant price of $6.[95]
- The warrants must be cash settled in U.S. dollars.[96]
- All currency warrants must include in their terms provisions specifying the time by which all exercise notices must

may have more than one Reporting Authority, each having different functions. *See* proposed Rule 5711(j)(iii)(D).

[92] Rule 5405(b) sets forth initial listing standards for primary equity securities.

[93] *See* proposed Rule 5711(k)(i)(A).

[94] *See* proposed Rule 5711(k)(i)(B).

[95] *See* proposed Rule 5711(k)(i)(C).

[96] *See* proposed Rule 5711(k)(i)(D).

be submitted, and that all unexercised warrants that are in the money will be automatically exercised on their expiration date or on or promptly following the date on which such warrants are delisted by NASDAQ (if such warrant issue has not been listed on another organized securities market in the United States).[97]

NASDAQ would file separate proposals under Section 19(b) of the Act before listing and trading separate and distinct Currency Warrants.[98]

Proposed Rule 5711(k)(iii) describes regulatory requirements applicable to Currency Warrants. Specifically:

- No Member shall accept an order from a customer to purchase or sell a Currency Warrant unless the customer's account has been approved for options trading pursuant to NOM Rules, Chapter XI, Section 7.[99]
- The provisions of NOM Rules, Chapter XI, Section 9 shall apply to recommendations in Currency Warrants and the term ''option'' as used therein shall be deemed to include Currency Warrants.[100]
- Any account in which a Member exercises discretion to trade in Currency Warrants shall be subject to the provisions of NOM Rules, Chapter XI, Section 10 with respect to such trading, and the terms ''option'' and ''options contract'' as used in therein shall be deemed to include Currency Warrants.[101]
- NOM Rules, Chapter XI, Section 8 shall apply to all customer accounts of a Member in which transactions in Currency Warrants are effected, and the term ''option'' as used therein shall be deemed to include Currency Warrants.[102]
- NOM Rules, Chapter XI, Section 24 shall apply to all public customer complaints received by a Member regarding Currency Warrants, and the term ''option'' as used therein shall be deemed to include Currency Warrants.[103]
- Members participating in Currency Warrants shall be bound to comply with the ''Communications and Disclosures'' rule of the Financial Industry Regulatory Authority (''FINRA''), as applicable, as though such rule were part of NASDAQ's proposed rules relating to Currency Warrants.[104]

Under proposed Rule 5711(k)(iv), trading on NASDAQ in any Currency Warrant would be halted whenever NASDAQ deems such action appropriate in the interests of a fair and orderly market or to protect investors. Trading in Currency Warrants that have been the subject of a halt or suspension by NASDAQ may resume if NASDAQ determines that the conditions which led to the halt or suspension are no longer present, or that the interests of a fair and orderly market are best served by a resumption of trading.

Proposed Rule 5711(k)(v) would govern reporting of Currency Warrant positions. Proposed Rule 5711(k)(v)(A) would require each Member to file with NASDAQ a report with respect to each account in which the Member has an interest, each account of a partner, officer, director, or employee of such Member, and each customer account that has established an aggregate position (whether long or short) of 100,000 warrants covering the same underlying currency, combining for purposes of the proposed rule: (i) long positions in put warrants and short positions in call warrants; and (i) short positions in put warrants with long positions in call warrants. The report shall be in such form as may be prescribed by NASDAQ and shall be filed no later than the close of business on the next day following the day on which the transaction or transactions requiring the filing of such report occurred.

Proposed Rule 5711(k)(v)(B) provides that whenever a report shall be required to be filed with respect to an account pursuant to the proposed rule, the Member filing the same must file with NASDAQ such additional periodic reports with respect to such account as NASDAQ may from time to time require.

Proposed Rule 5711(k)(v)(C) provides that all reports required by the proposed rule shall be filed with NASDAQ in such manner and form as prescribed by NASDAQ.

The proposed requirements relating to Currency Warrants are based on, and substantively identical to, the requirements for Currency Warrants set forth in NYSE Arca Equities Rules 8.3 (''Listing of Currency and Index Warrants''), 8.4 (''Account Approval''), 8.5 (''Suitability''), 8.6 (''Discretionary Accounts''), 8.7 (''Supervision of Accounts''), 8.8 (''Customer Complaints''), 8.9 (''Prior Approval of Certain Communications to Customers''), 8.12 (''Trading Halts or Suspensions''), and 8.13 (''Reporting of Warrant Positions'').

C. General Provisions

To the extent not specifically addressed in the respective proposed rules, and unless otherwise noted below, the following general provisions apply to all of the proposed rules and Subject Securities.

1. Information Circular

Prior to the commencement of trading, NASDAQ will inform its Members in an Information Circular of the special characteristics and risks associated with trading the Subject Securities. Specifically, the Information Circular will discuss the following: (i) The procedures for purchases and redemptions of the Subject Securities (and/or that the Subject Securities are not individually redeemable); (ii) NASDAQ Rule 2310, which imposes suitability obligations on NASDAQ Members with respect to recommending transactions in the Subject Securities to customers; (iii) how information regarding the Intraday Indicative Value is disseminated; (iv) the requirement that Members deliver a prospectus to investors purchasing newly issued Subject Securities prior to or concurrently with the confirmation of a transaction; and (v) trading information.

In addition, the Information Circular will advise Members, prior to the commencement of trading, of the prospectus delivery requirements applicable to the Subject Securities. Members purchasing Subject Securities for resale to investors will deliver a prospectus to such investors. The Information Circular will also discuss any exemptive, no-action, and interpretive relief granted by the Commission from any rules under the Act.

In addition, the Information Circular will reference that the Subject Securities are subject to various fees and expenses described in the registration statement. If applicable, the Information Circular will also reference that the CFTC has regulatory jurisdiction over the trading of futures contracts.

The Information Circular will also disclose the trading hours of the Subject Securities and, if applicable, the Net Asset Value (''NAV'') calculation time for the Subject Securities. The Information Circular will disclose that information about the Subject Securities and the corresponding indexes, if applicable, will be publicly available on the Web site for the Subject Securities. The Information Circular will also reference, if applicable, the fact that there is no regulated source of last sale information regarding physical commodities, and that the Commission

[97] *See* proposed Rule 5711(k)(i)(E).
[98] *See* proposed Rule 5711(k)(ii).
[99] *See* proposed Rule 5711(k)(iii)(A).
[100] *See* proposed Rule 5711(k)(iii)(B).
[101] *See* proposed Rule 5711(k)(iii)(C).
[102] *See* proposed Rule 5711(k)(iii)(D).
[103] *See* proposed Rule 5711(k)(iii)(E).
[104] *See* proposed Rule 5711(k)(iii)(F).

has no jurisdiction over the trading of physical commodities or futures contracts on which the value of the Subject Securities may be based.

The Information Circular will also reference the risks involved in trading the Subject Securities during the Opening Process and the Post-Market Session when an updated Intraday Indicative Value will not be calculated or publicly disseminated and, if applicable, the risks involved in trading the Subject Securities during the Regular Market Session when the Intraday Indicative Value may be static or based in part on the fluctuation of currency exchange rates when the underlying markets have closed prior to the close of NASDAQ's Regular Market Session.

2. Limitation of NASDAQ Liability

Neither NASDAQ, any agent of NASDAQ, nor the Reporting Authority (if applicable), shall have any liability for damages, claims, losses or expenses caused by any errors, omissions, or delays in calculating or disseminating any applicable underlying index or asset value; the current value of the applicable positions or interests required to be deposited to a Trust, if applicable, in connection with issuance of the securities; net asset value; or any other information relating to the purchase, redemption, or trading of the Subject Securities, resulting from any negligent act or omission by NASDAQ, any agent of NASDAQ, or the Reporting Authority (if applicable), or any act, condition or cause beyond the reasonable control of NASDAQ, any agent of NASDAQ, or the Reporting Authority (if applicable), including, but not limited to, an act of God; fire; flood; extraordinary weather conditions; war; insurrection; riot; strike; accident; action of government; communications or power failure; equipment or software malfunction; or any error, omission or delay in the reports of transactions in the applicable positions or interests.

3. Market Maker Accounts

A registered Market Maker in the securities described below must file with NASDAQ, in a manner prescribed by NASDAQ, and keep current a list identifying all accounts for trading in:

- In the case of Commodity-Based Trust Shares, the applicable underlying commodity, related commodity futures or options on commodity futures, or any other related commodity derivatives, which the registered Market Maker may have or over which it may exercise investment discretion (''Underlying Commodities'');
- In the case of Currency Trust Shares, the applicable underlying non-U.S. currency, options, futures or options on futures on such currency, or any other derivatives based on such currency, which the registered Market Maker may have or over which it may exercise investment discretion (''Underlying Currencies'');
- In the case of Commodity Index Trust Shares, the applicable physical commodities included in, or options, futures or options on futures on, an index underlying an issue of Commodity Index Trust Shares or any other derivatives based on such index or based on any commodity included in such index, which the registered Market Maker may have or over which it may exercise investment discretion (''Underlying Commodity Index Assets'');
- In the case of Commodity Futures Trust Shares, the applicable underlying commodity, related futures or options on futures, or any other related derivatives, which the registered Market Maker may have or over which it may exercise investment discretion (''Underlying Commodity Futures'');
- In the case of Partnership Units, the applicable underlying asset or commodity, related futures or options on futures, or any other related derivatives, which the registered Market Maker may have or over which it may exercise investment discretion (''Underlying Partnership Unit Assets'');
- In the case of Trust Units, the applicable underlying commodity, related commodity futures or options on commodity futures, or any other related commodity derivatives, which the registered Market Maker may have or over which it may exercise investment discretion (''Underlying Trust Unit Assets''); and
- In the case of Managed Trust Securities, the underlying commodity or applicable currency, related futures or options on futures, or any other related derivatives, which a registered Market Maker may have or over which it may exercise investment discretion (''Underlying Managed Trust Assets'').

No registered Market Maker in the above mentioned securities shall trade in the respective Underlying Commodities, Underlying Currencies, Underlying Commodity Index Assets, Underlying Commodity Futures, Underlying Partnership Unit Assets, Underlying Trust Unit Assets, and/or the Underlying Managed Trust Assets (collectively, ''Underlying Assets'') in an account in which a Market Maker, directly or indirectly, controls trading activities, or has a direct interest in the profits or losses thereof, which has not been reported to NASDAQ.

In addition to the existing obligations under NASDAQ rules regarding the production of books and records (*see, e.g.,* Rule 4625), a registered Market Maker in the above mentioned securities is required to make available to NASDAQ such books, records or other information pertaining to transactions by such entity or registered or non-registered employee affiliated with such entity for its or their own accounts for trading the applicable Underlying Assets as may be requested by NASDAQ.

4. Trading Rules

NASDAQ deems the Subject Securities to be equity securities, thus rendering trading in the Subject Securities subject to NASDAQ's existing rules governing the trading of equity securities. The Subject Securities will trade on NASDAQ from 8 a.m. to 8 p.m. E.T. NASDAQ has appropriate rules to facilitate transactions in the Subject Securities during all trading sessions. The minimum price increment for quoting and entry of orders in equity securities traded on NASDAQ is $0.01, with the exception of securities that are priced less than $1.00 for which the minimum price increment for order entry is $0.0001.

5. Surveillance

NASDAQ believes that its surveillance procedures are adequate to address any concerns about the trading of the Subject Securities on NASDAQ. Trading of the Subject Securities on NASDAQ will be subject to FINRA's surveillance procedures for derivative products.[105] NASDAQ may obtain information via the ISG from other exchanges who are members or affiliates of the ISG.[106]

In addition, to the extent that a Subject Security invests in futures contracts, not more than 10% of the weight of such futures contracts in the aggregate shall consist of components whose principal trading market is not a member of ISG or is a market with which the Exchange does not have a comprehensive surveillance sharing agreement. NASDAQ has a general policy prohibiting the distribution of material, non-public information by its employees.

As a general matter, NASDAQ has regulatory jurisdiction over its Members

[105] FINRA surveils trading on NASDAQ pursuant to a regulatory services agreement. NASDAQ is responsible for FINRA's performance under this regulatory services agreement.

[106] For a list of the current members and affiliate members of ISG, see *www.isgportal.com.*

and their associated persons, which includes any person or entity controlling a Member, as well as a subsidiary or affiliate of a Member that is in the securities business. A subsidiary or affiliate of a Member that does business only in commodities or futures contracts would not be subject to NASDAQ jurisdiction, but NASDAQ could obtain information regarding the activities of such subsidiary or affiliate through surveillance sharing agreements with regulatory organizations of which such subsidiary or affiliate is a Member.

6. Trading Halts

With respect to trading halts, in addition to the trading halt requirements set forth in the proposed rules, NASDAQ may consider all relevant factors in exercising its discretion to halt or suspend trading in the Subject Securities. Trading in the Subject Securities may be halted because of market conditions or for reasons that, in the view of NASDAQ, make trading in the Subject Securities inadvisable. These may include: (i) the extent to which trading in the underlying asset or assets is not occurring; or (ii) whether other unusual conditions or circumstances detrimental to the maintenance of a fair and orderly market are present. In addition, trading in the Subject Securities will be subject to trading halts caused by extraordinary market volatility pursuant to NASDAQ's ''circuit breaker'' Rule 4120(a)(11) or by the halt or suspension of the trading of the current underlying asset or assets.

If the applicable Intraday Indicative Value, value of the underlying index, or the value of the underlying asset or assets (*e.g.,* securities, commodities, currencies, futures contracts, or other assets) is not being disseminated as required, NASDAQ may halt trading during the day in which such interruption to the dissemination occurs. If the interruption to the dissemination of the applicable Intraday Indicative Value, value of the underlying index, or the value of the underlying asset or assets persists past the trading day in which it occurred, NASDAQ will halt trading no later than the beginning of the trading day following the interruption. In addition, if NASDAQ becomes aware that the net asset value with respect to a series of the Subject Securities is not disseminated to all market participants at the same time, it will halt trading in such series until such time as the net asset value is available to all market participants.

7. Suitability

Currently, NASDAQ Rule 2310 governs Recommendations to Customers (Suitability), Fair Dealing with Customers, Suitability Obligations to Institutional Customers, and Direct Participation Programs.

Prior to the commencement of trading of any inverse, leveraged, or inverse leveraged Subject Securities, NASDAQ will inform its Members of the suitability requirements of NASDAQ Rule 2310 in an Information Circular. Specifically, Members will be reminded in the Information Circular that, in recommending transactions in these securities, they must have a reasonable basis to believe that: (i) The recommendation is suitable for a customer given reasonable inquiry concerning the customer's investment objectives, financial situation, needs, and any other information known by such Member; and (ii) the customer can evaluate the special characteristics, and is able to bear the financial risks, of an investment in the securities. In connection with the suitability obligation, the Information Circular will also provide that Members must make reasonable efforts to obtain the following information: (1) The customer's financial status; (2) the customer's tax status; (3) the customer's investment objectives; and (4) such other information used or considered to be reasonable by such Member or registered representative in making recommendations to the customer.

In addition, FINRA has implemented increased sales practice and customer margin requirements for FINRA members applicable to inverse, leveraged, and inverse leveraged securities and options on such securities, as described in FINRA Regulatory Notices 09–31 (June 2009), 09–53 (August 2009) and 09–65 (November 2009) (''FINRA Regulatory Notices''). Members that carry customer accounts will be required to follow the FINRA guidance set forth in the FINRA Regulatory Notices. The Information Circular will reference the FINRA Regulatory Notices regarding sales practice and customer margin requirements for FINRA members applicable to inverse, leveraged, and inverse leveraged securities and options on such securities.

NASDAQ notes that, for such inverse, leveraged, and inverse leveraged securities, the corresponding funds seek leveraged, inverse, or leveraged inverse returns on a daily basis, and do not seek to achieve their stated investment objective over a period of time greater than one day because compounding prevents the funds from perfectly achieving such results. Accordingly, results over periods of time greater than one day typically will not be a leveraged multiple (+200%), the inverse (−100%) or a leveraged inverse multiple (−200%) of the period return of the applicable benchmark and may differ significantly from these multiples. NASDAQ's Information Circular, as well as the applicable registration statement, will provide information regarding the suitability of an investment in such securities.

III. Discussion and Commission's Findings

After careful review, the Commission finds that the proposed rule change, as amended, is consistent with the requirements of Section 6 of the Act and the rules and regulations thereunder applicable to a national securities exchange.[107] In particular, the Commission finds that the proposed rule change, as amended, is consistent with the requirements of Section 6(b)(5) of the Act,[108] which requires, among other things, that rules of a national securities exchange be designed to prevent fraudulent and manipulative acts and practices, to promote just and equitable principles of trade, to foster cooperation and coordination with persons engaged in facilitating transactions in securities, to remove impediments to and perfect the mechanism of a free and open market and a national market system, and, in general, to protect investors and the public interest. The Commission notes that it has previously approved substantively identical listing standards for the listing and trading of the Subject Securities on NYSE Arca.[109]

A. Generic Listing Standards

Rule 19b–4(e) under the Act[110] provides that the listing and trading of a new derivative securities product by a self-regulatory organization (''SRO'') shall not be deemed a proposed rule change, pursuant to Section (c)(1) of Rule 19b–4,[111] if the Commission has approved, pursuant to Section 19(b) of

[107] In approving this proposed rule change, the Commission notes that it has considered the proposed rule's impact on efficiency, competition, and capital formation. *See* 15 U.S.C. 78c(f).

[108] 15 U.S.C. 78f(b)(5).

[109] *See* NYSE Arca Equities Rules 5.2(j)(4); 5.2(j)(5); 5.2(j)(6)(B)(I)(2), 5.2(j)(6)(B)(II)(2), 5.2(j)(6)(B)(IV); 5.2(j)(6)(B)(V); 5.2(j)(6)(B)(VI); Commentary .01 to NYSE Arca Equities Rule 5.2(j)(6); NYSE Arca Equities Rules 5.2(j)(7); 8.201; 8.202; 8.203; 8.204; NYSE Arca Rules 8.3–8.9, 8.12, 8.13; and NYSE Arca Equities Rules 8.300; 8.500; and 8.700. The Exchange has represented that there are no material substantive differences between the proposed rules and the NYSE Arca Equities Rules on which they are based.

[110] 17 CFR 240.19b–4(e)

[111] 17 CFR 240.19b–4(c)(1).

the Act,[112] the SRO's trading rules, procedures, and listing standards for the product class that would include the new derivatives securities product, and the SRO has a surveillance program for the product class. The Exchange is proposing to: (i) Amend the continued generic listing standards for Equity Index-Linked Securities and Commodity-Linked Securities under amended Rule 5710; (ii) adopt initial and continued generic listing standards for Fixed Income-Linked Securities, Futures-Linked Securities, and Multifactor Index-Linked Securities under amended Rule 5710; (iii) adopt generic listing standards for Index-Linked Exchangeable Notes under proposed Rule 5711(a); and (iv) adopt generic listing standards for Currency Trust Shares under proposed Rule 5711(e), pursuant to which the Exchange will be able to list and trade such securities without Commission approval of each individual product under Rule 19b–4(e).[113] Accordingly, any securities that the Exchange lists and/or trades pursuant to NASDAQ Rules 5710, 5711(a) and 5711(e), as proposed, must satisfy the standards set forth therein.[114]

1. Equity Index-Linked Securities and Commodity Linked Securities

The Commission has previously approved, pursuant to Section 19(b) of the Act and in accordance with Rule 19b–4(e) thereunder, the adoption of generic initial and continued listing standards for the listing and trading of Equity Index-Linked Securities and Commodity-Linked Securities on the Exchange, so that securities that satisfy such proposed generic listing standards for Equity Index-Linked Securities and Commodity-Linked Securities may commence trading on the Exchange without public comment and Commission approval.[115] The Commission notes that it has previously approved the same generic listing standards for Equity Index-Linked Securities and Commodity-Linked Securities for NYSE Arca.[116] The Commission believes that, because the proposed continued listing requirements under proposed Rules 5710(k)(i)(B) and (k)(ii)(B) for Equity Index-Linked Securities and Commodity-Linked Securities, respectively,[117] are substantively identical to those of NYSE Arca and present no unique or novel regulatory issues, such proposed requirements are reasonably designed to protect investors and the public interest. Specifically, and as further discussed above, under the proposed continued listing standards, NASDAQ would commence delisting or removal proceedings of a series of Equity Index-Linked Securities or Commodity-Linked Securities if: (i) The initial listing criteria are not continuously maintained (subject to certain exceptions in the case of Equity Index-Linked Securities as described above); (ii) the aggregate market value or principal amount publicly held is less than $400,000; (iii) the value of the index or Reference Asset is no longer available or being disseminated; or (iv) if circumstances exist which make further dealings in the securities on NASDAQ inadvisable. The Commission believes that the proposed continued listing standards are adequately designed to ensure transparency of key values and information regarding the securities and will help ensure a minimum level of liquidity for such securities to allow for the maintenance of fair and orderly markets.

2. Fixed Income Index-Linked Securities, Futures Linked Securities, and Multifactor Index-Linked Securities

In addition, the Commission has previously approved the adoption of generic initial and continued listing standards for Fixed-Income Index-Linked Securities, Futures-Linked Securities, and Multifactor Index-Linked Securities, each of which are specific types of ''Index-Linked Securities,'' on NYSE Arca.[118] Consistent with its previous orders, the Commission believes that the generic listing standards proposed by the Exchange for Fixed-Income Index-Linked Securities, Futures-Linked Securities, and Multifactor Index-Linked Securities should fulfill the intended objective of Rule 19b–4(e) by allowing those Additional Linked Securities that satisfy the generic listing standards to commence trading without public comment and Commission approval.[119] The Exchange's ability to rely on Rule 19b–4(e) to list and trade Additional Linked Securities that meet the applicable requirements and minimum standards should reduce the time frame for bringing these securities to market and thereby reduce the burdens on issuers and other market participants, while also promoting competition and making such securities available to investors more quickly. In addition, the Commission believes the Exchange's proposal to list and trade the Additional Linked Securities will provide an additional avenue for investors to achieve desired investment objectives through the purchase of Index-Linked Securities, and will benefit investors by increasing competition among markets that trade Index-Linked Securities.

a. Listing and Trading Rules

The Commission finds that the Exchange's proposal contains adequate rules and procedures to govern the listing and trading of Fixed Income-Linked Securities, Futures-Linked Securities, and Multifactor Index-Linked Securities pursuant to Rule 19b–4(e) on the Exchange. Such Additional Linked Securities listed under the proposed standards will be subject to the full panoply of NASDAQ rules and procedures that govern the trading of Linked Securities, and also the rules and procedures that govern the trading of equity securities on the Exchange including, among others, rules and procedures governing trading halts, surveillance procedures, disclosures to members, customer suitability requirements, and Market Maker obligations. In addition, the Additional Linked Securities will be subject to the asset/equity requirements and tangible net worth requirements applicable to Linked Securities, as well as the minimum holder and distribution

[112] 15 U.S.C. 78s(b).

[113] 17 CFR 240.19b–4(e).

[114] Under the proposal, the failure of a particular product or index to comply with the proposed generic listing standards under Rule 19b–4(e) for Linked Securities or Currency Trust Shares would not preclude the Exchange from submitting a separate filing pursuant to Section 19(b)(2) of the Act, requesting Commission approval to list and trade a particular series of Linked Securities or Currency Trust Shares. *See* introductory paragraphs to Rule 5710 and proposed Rule 5711(e) (providing that NASDAQ may submit a rule filing pursuant to Section 19(b)(2) of the Act to permit the listing and trading of Linked Securities or Currency Trust Shares, respectively, that do not otherwise meet the generic listing standards set forth in the relevant rules applicable to them).

[115] *See* Securities Exchange Act Release Nos. 54167 (July 18, 2009), 71 FR 42145 (July 25, 2006) (SR–NASDAQ–2006–002) (approving generic listing standards for Equity Index-Linked Securities on NASDAQ) and 56910 (December 5, 2007), 72 FR 70628 (December 12, 2007) (SR–NASDAQ–2007–071) (approving generic listing standards for Commodity-Linked Securities).

[116] *See* Securities Exchange Act Release No. 52204 (August 3, 2005), 72 FR 46559 (August 10, 2005) (SR–PCX–2005–63) (approving generic listing standards for Index-Linked Securities). *See also* NYSE Arca Equities Rules 5.2(j)(6)(B)(I)(2) and (B)(II)(2).

[117] *See supra* note 4.

[118] *See* Securities Exchange Act Release No. 52204 (August 3, 2005), 72 FR 46559 (August 10, 2005) (SR–PCX–2005–63) (approving generic listing standards for Index-Linked Securities).

[119] The Commission notes that the failure of a particular Additional Linked Security issue to satisfy the proposed generic initial listing standards pursuant to Rule 19b–4(e), however, would not preclude the Exchange from submitting a separate filing pursuant to Section 19(b)(2), requesting Commission approval to list and trade a particular Linked Security. *See supra* note 114.

requirements, principal/market value requirements, and term thresholds for Linked Securities.[120] In addition, as set forth more fully above, the proposed listing criteria for Fixed Income-Linked Securities include additional requirements relating to relative weighting, outstanding principal, market capitalization and diversification. These requirements are designed to ensure that the trading markets for index components underlying the Linked Securities are adequately capitalized and sufficiently liquid, and that no one component dominates the index. Further, the proposed listing criteria for Futures Linked Securities require, subject to certain limited exceptions, that the pricing information for components be derived from an ISG member market or its affiliate, or a market with which NASDAQ has a comprehensive surveillance sharing agreement. The Commission believes that these requirements should significantly minimize the potential for manipulation.

The Exchange's proposed requirements for Multifactor Index-Linked Securities are linked to criteria for other types of Linked Securities set forth in Rule 5710, including the proposed standards applicable to Fixed Income-Linked Securities and Futures-Linked Securities. Accordingly, any underlying Reference Asset for a Multifactor-Index Linked Security would have to satisfy the criteria set out in the Exchange's rules for Reference Assets underlying other Linked Securities.

The generic listing standards permit listing of Additional Linked Securities if the Commission previously approved the underlying index for trading in connection with another derivative product. The Commission believes that if it has previously determined that such index and its components were sufficiently transparent, then the Exchange may rely on this finding, provided that the conditions set forth in the Commission's approval order continue to be satisfied.

The Commission believes that the proposed continued listing requirements for the Additional Linked Securities are reasonably designed to protect investors and the public interest. Under the proposed continued listing standards, NASDAQ would commence delisting or removal proceedings of a series of Fixed Income Index-Linked Securities, Futures-Linked Securities, or Multifactor Index-Linked Securities if: (i) The initial listing criteria are not continuously maintained; (ii) the aggregate market value or principal amount publicly held is less than $400,000; (iii) the value of the Reference Asset is no longer available or being disseminated; or (iv) if circumstances exist which make further dealings in the securities on NASDAQ inadvisable. The Commission believes that the proposed continued listing standards are adequate to ensure transparency of key values and information regarding the Additional Linked Securities. The Commission further believes that the continued listing standards will help ensure a minimum level of liquidity exists for such securities to allow for the maintenance of fair and orderly markets. In addition, the Exchange will have flexibility to delist a series of such securities if circumstances warrant such action.

b. Dissemination of Information

The Additional Linked Securities will be subject to the Reference Asset information dissemination requirements applicable to all Linked Securities.[121] The proposed listing requirements for Additional Linked Securities also require that: (i) in the case of Fixed Income-Linked Securities, the Reference Asset must be widely disseminated to the public at least once per business day; and (ii) in the case of Futures-Linked Securities and Multifactor Index-Linked Securities, the Reference Asset must be, and, if the security is periodically redeemable, the Intraday Indicative Value of the security also must be, widely disseminated at least every 15 seconds during the Regular Market Session. In addition, the Additional Linked Securities will be subject to the trading halts requirements applicable to all Linked Securities, which provide that NASDAQ may halt trading during the day on which an interruption to the dissemination of the Intraday Indicative Value (if required to be disseminated) or the index or Reference Asset value occurs, and that NASDAQ will halt trading no later than the beginning of trading following the trading day when the interruption began if such interruption persists at that time.[122] The Commission believes that the proposed rules are reasonably designed to promote the timely and fair disclosure of useful information that may be necessary to price the Additional Linked Securities appropriately, and to prevent trading when a reasonable degree of transparency cannot be assured.

c. Surveillance

The Additional Linked Securities will be subject to the surveillance procedure requirements applicable to Linked Securities.[123] In addition, the Exchange has represented that trading of the Additional Linked Securities on NASDAQ will be subject to FINRA's surveillance procedures for derivative products, and that the Exchange's surveillance procedures applicable to derivative products are adequate to address any concerns about the trading of the Linked Securities on NASDAQ.[124] Further, the proposed listing criteria for Futures Linked Securities require, subject to certain limited exceptions, that the pricing information for components be derived from an ISG member market or its affiliate, or a market with which NASDAQ has a comprehensive surveillance sharing agreement.

d. Additional Provisions

The Additional Linked Securities will be subject to the requirement that issuers comply with Rule 10A–3 under the Act.[125] In addition, the Additional Linked Securities will be subject to the index calculation and ''firewall'' requirements applicable to all Linked Securities.[126] The Commission believes that the ''firewall'' restrictions applicable to Linked Securities are designed to prevent the use and dissemination of material, non-public information regarding an underlying index and prevent conflicts of interest with respect to personnel of a broker-dealer maintaining an index underlying such securities. NASDAQ has also represented that it has a general policy prohibiting the distribution of material, non-public information by its employees.[127] The Commission believes that these requirements, taken together, should significantly minimize the

[120] *See* Rules 5710 (a)–(e), *supra* note 11.

[121] *See* proposed Rule 5710(g)(ii) (formerly Rule 5710(i)(ii)), which provides that, subject to certain exceptions, the current value of the index or Reference Asset of a Linked Securities must be widely disseminated at least every 15 seconds during NASDAQ's regular market session.

[122] *See* proposed Rule 5710(h) (formerly Rule 5710(j)).

[123] *See* proposed Rule 5710(i) (formerly Rule 5710(k)), which provides that FINRA will implement on behalf of NASDAQ written surveillance procedures for Linked Securities, and that NASDAQ will enter into adequate comprehensive surveillance sharing agreements for non-U.S. securities, as applicable.

[124] *See* Notice at 6848.

[125] 17 CFR 240.10A–3. *See* Rule 5710(f).

[126] *See* proposed Rule 5710(g)(i) (formerly Rule 5710(i)(i)), which requires that if an index is maintained by a broker-dealer, the broker-dealer must erect a ''firewall'' around the personnel who have access to information concerning changes and adjustments to the index and that the index must be calculated by a third party who is not a broker-dealer.

[127] *See* Notice at 6848.

potential for manipulation and will allow for maintenance of a fair and orderly market in the Additional Linked Securities.

Proposed Commentary .01(a) to Rule 5710 would impose additional reporting requirements, trading restrictions and books and records obligations on Members acting as registered Market Makers in Linked Securities. The Commission believes that such restrictions, reporting and record-keeping requirements are reasonably designed to promote a fair and orderly market for Linked Securities and will assist the Exchange in identifying situations potentially susceptible to manipulation.

In addition, the Exchange has represented that prior to the commencement of trading in a series of Additional Linked Securities, the Exchange will inform its Members in an Information Circular of the special characteristics and risks associated with trading the Additional Linked Securities.[128] The Commission believes that the Exchange's proposal should ensure that its Members have information that will allow them to be adequately apprised of the terms, characteristics, and risks of trading the Additional Linked Securities.

As discussed above, the Exchange proposes to make certain technical revisions so that the Additional Linked Securities are included in the provisions of Rule 5710 that apply to all Linked Securities. The Commission finds that the technical revisions to NASDAQ Rule 5710 are reasonable and promote transparency and consistent application of certain rules imposed with respect to types of Linked Securities.

The Commission notes that the proposed generic listing standards for Fixed Income Index-Linked Securities, Futures-Linked Securities, and Multifactor Index-Linked Securities are substantively identical to those previously approved by the Commission for the listing and trading of Fixed Income Index-Linked Securities, Futures Linked Securities and Multifactor Index-Linked Securities on NYSE Arca.[129] As such, the Commission believes that the proposed generic listing standards present no unique or novel regulatory issues and, for the reasons discussed above, are reasonably designed to protect investors and the public interest.

3. Index-Linked Exchangeable Notes

As discussed above, the Commission has previously approved the adoption of generic listing standards for various classes of new derivative securities products to be listed and traded pursuant to Rule 19b–4(e).[130] In addition, the Commission has previously approved the adoption of generic initial and continued listing standards for Index-Linked Exchangeable Notes on NYSE Arca.[131] Consistent with its previous orders, the Commission believes that the generic listing standards proposed by the Exchange for Index-Linked Exchangeable Notes should fulfill the intended objective of Rule 19b–4(e) by allowing those Index-Linked Exchangeable Notes that satisfy the generic listing standards to commence trading without public comment and Commission approval. The Exchange's ability to rely on Rule 19b–4(e) to list and trade Index-Linked Exchangeable Notes that meet the applicable requirements and minimum standards should reduce the time frame for bringing these securities to market and thereby reduce the burdens on issuers and other market participants, while also promoting competition and making such securities available to investors more quickly. In addition, the Commission believes the Exchange's proposal to list and trade Index-Linked Exchangeable Notes will provide an additional avenue for investors to achieve desired investment objectives through the purchase of index-linked exchangeable debt securities, and will benefit investors by increasing competition among markets that trade index-linked exchangeable debt.

a. Listing and Trading Rules

The Commission finds that NASDAQ's proposal contains adequate rules and procedures to govern the listing and trading of Index-Linked Exchangeable Notes pursuant to Rule 19b–4(e). Index-Linked Exchangeable Notes listed under the standards will be subject to the full panoply of NASDAQ rules and procedures that currently govern the trading of equity securities on the Exchange including, among others, rules and procedures governing trading halts, surveillance procedures, disclosures to Members, customer suitability requirements, and Market Maker obligations.

The Commission is satisfied with the Exchange's development of specific listing and delisting criteria for Index-Linked Exchangeable Notes. As described more fully above, the proposed listing criteria include minimum tangible net worth and earnings requirements for issuers. These criteria are, in part, intended to ensure that the issuer has enough assets to meet its obligations under the terms of the note and should help to reduce systematic risk. The proposed listing criteria also include minimum holder and distribution requirements, which should serve to establish a minimum level of liquidity for each series of Index-Linked Exchangeable Notes to allow for maintenance of fair and orderly markets.

The proposed initial listing criteria also contain minimum requirements for the indices the Index-Linked Exchangeable Notes can be linked to, and the underlying components of those indices. The Exchange's proposed requirements for indices underlying Index-Linked Exchangeable Notes are linked to other approved criteria for index-related products. Accordingly, any underlying index would have to follow the criteria adopted by the Exchange and already in the Exchange's rules for that index, including the criteria for component stocks. These requirements will generally contain, among other things, minimum market capitalization, trading volume, and concentration requirements that are designed to reduce manipulation concerns and ensure a minimum level of liquidity for component securities. Accordingly, the Commission believes that these criteria should serve to ensure that the underlying stocks of underlying indices of Index-Linked Exchangeable Notes are well capitalized and actively traded, and should thus significantly minimize the potential for manipulation.

The Commission believes that the proposed continued listing requirements for Index-Linked Exchangeable Notes are reasonably designed to protect investors and the public interest. As further discussed above, under the proposed continued listing standards, beginning 12 months after the initial issuance of a series of Index-Linked Exchangeable Notes, NASDAQ would consider suspension of trading in or removal of listing of such series if: (i) The series has fewer than 50,000 notes issued and outstanding; (ii) the outstanding market value of the series held is less than $1,000,000; or (iii) if circumstances exist which make further dealings in the securities on NASDAQ inadvisable. The Commission

[128] *See* Notice at 6847.

[129] *See* NYSE Arca Equities Rule 5.2(j)(6)(B)(IV), (V), and (VI).

[130] *See supra* note 115.

[131] *See* Securities Exchange Act Release No. 49532 (April 7, 2004), 69 FR 19593 (April 13, 2004) (SR–PCX–2004–01) (approving generic listing standards for Index-Linked Exchangeable Notes).

believes that the continued listing standards will help ensure a minimum level of liquidity exists for such securities to allow for the maintenance of fair and orderly markets. In addition, the Exchange will have flexibility to delist a series if circumstances warrant such action.

b. Dissemination of Information

The proposed rule requires that an estimate of the value of a note for each series of Index-Linked Exchangeable Notes will be calculated and widely disseminated at least every 15 seconds, and that the value of any underlying index will also be publicly disseminated to investors, on a real time basis, every 15 seconds.[132] In addition, the Exchange has represented that it may halt trading during the day on which an interruption to the dissemination of either of these values occurs, and that NASDAQ will halt trading no later than the beginning of trading following the trading day when the interruption began if such interruption persists at that time.[133] The Commission believes that the proposed rules are reasonably designed to promote the timely and fair disclosure of useful information that may be necessary to price the Index-Linked Exchangeable Notes appropriately, and to prevent trading when a reasonable degree of transparency cannot be assured.

c. Surveillance

The Exchange has represented that trading of the Index-Linked Exchangeable Notes on NASDAQ will be subject to FINRA's surveillance procedures for derivative products, and that the Exchange's surveillance procedures applicable to derivative products are adequate to address any concerns about the trading of the Index-Linked Exchangeable Notes on NASDAQ.[134]

d. Additional Provisions

The Commission notes that the proposed listing criteria requires that if the underlying index is maintained by a broker-dealer, the index must be calculated by a third party who is not a broker-dealer, and the broker-dealer is required to erect firewalls around its personnel who have access to information concerning changes in and adjustments to the index.[135] NASDAQ has also represented that it has a general policy prohibiting the distribution of material, non-public information by its employees.[136] The Commission believes that such firewalls and information barrier policies and procedures are adequate to prevent the misuse of material, non-public information regarding changes to the underlying index, and to address the unauthorized transfer and misuse of material, non-public information.

In addition, the Exchange has represented that prior to the commencement of trading in a series of Index-Linked Exchangeable Notes, the Exchange will inform its Members in an Information Circular of the special characteristics and risks associated with trading the Index-Linked Exchangeable Notes.[137] The Commission believes that the Exchange's proposal should ensure that investors have information that will allow them to be adequately apprised of the terms, characteristics, and risks of trading the Index-Linked Exchangeable Notes.

The Commission notes that the proposed generic listing standards for Index-Linked Exchangeable Notes are substantively identical to those previously approved by the Commission for the listing and trading of Index-Linked Exchangeable Notes on NYSE Arca.[138] As such, the Commission believes that the proposed generic listing standards present no unique or novel regulatory issues and, for the reasons discussed above, are reasonably designed to protect investors and the public interest.

4. Currency Trust Shares

As discussed above, the Commission has previously approved the adoption of generic listing standards for various classes of new derivative securities products to be listed and traded pursuant to Rule 19b–4(e).[139] In addition, the Commission has previously approved generic listing standards for the listing and trading of Currency Trust Shares pursuant to Rule 19b–4(e) on NYSE Arca.[140] The Commission believes that proposed generic listing standards for Currency Trust Shares should fulfill the intended objective of Rule 19b–4(e) and allow securities that satisfy the proposed generic listing standards to commence trading without public comment and Commission approval.[141] The Exchange's ability to rely on Rule 19b–4(e) to list and trade Currency Trust Shares that meet the applicable requirements and minimum standards should reduce the time frame for bringing these securities to market and thereby reduce the burdens on issuers and other market participants, while also promoting competition and making such securities available to investors more quickly. In addition, the Commission believes the Exchange's proposal to list and trade Currency Trust Shares will provide an additional avenue for investors to achieve desired investment objectives through the purchase of currency trust shares, and will benefit investors by increasing competition among markets that trade currency trust shares.

a. Listing and Trading Rules

The Commission finds that the proposal contains adequate rules and procedures to govern the listing and trading of Currency Trust Shares pursuant to Rule 19b–4(e) on the Exchange. The Currency Trust Shares listed and traded under the proposed listing standards will be subject to the full panoply of NASDAQ rules and procedures that govern the trading equity securities on the Exchange including, among others, rules and procedures governing trading halts, surveillance procedures, disclosures to Members, customer suitability requirements, and Market Maker obligations.

For the Exchange to approve an issue of Currency Trust Shares for listing under the generic listing standards, a minimum of 100,000 Currency Trust Shares must be outstanding at the commencement of trading. This requirement should serve to ensure a minimum level of liquidity for each series of Currency Trust Shares, to allow for the maintenance of fair and orderly markets and reduce the potential for manipulation.

As further discussed above, beginning 12 months after the initial issuance of a series of Currency Trust Shares, the Exchange may consider suspending trading in, or removing from listing, such series if: (i) The trust has more than 60 days remaining until termination and there are fewer than 50 record and/or beneficial holders of

[132] *See supra* note 4.

[133] *See* Notice at 6848.

[134] *See* Notice at 6848.

[135] *See* proposed Rule 5711(a)(iv)(which requires that an Issuer Index comply with the requirements of NOM Rules, Chapter XIV, Section 6(b)(12).

[136] *See* Notice at 6848.

[137] *See* Notice at 6847.

[138] *See* NYSE Arca Equities Rule 5.2(j)(4).

[139] *See supra* note 115.

[140] *See* Securities Exchange Act Release No. 60065 (June 8, 2009), 74 FR 28310 (June 15, 2009) (SR–NYSEArca–2009–47) (approving generic listing standards for Currency Trust Shares under NYSE Arca Equities Rule 8.202).

[141] The Commission notes that the failure of a particular product or index to comply with the proposed generic listing standards under Rule 19b–4(e), however, would not preclude the Exchange from submitting a separate filing pursuant to Section 19(b)(2) of the Act, requesting Commission approval to list and trade a particular series of Currency Trust Shares. *See supra* note 114.

Currency Trust Shares for 30 or more consecutive trading days; (ii) the trust has fewer than 50,000 Currency Trust Shares issued and outstanding; (iii) the market value of all the Currency Trust Shares issued and outstanding is less than $1,000,000; (iv) the Intraday Indicative Value of the Currency Trust Shares or the value of the underlying currency is no longer calculated or being disseminated on at least a 15-second delayed basis; or (iv) if circumstances exist which make further dealings in the securities on NASDAQ inadvisable. The Commission believes that the proposed continued listing standards are adequate to ensure transparency of key values and information regarding the Currency Trust Shares, and will help ensure a minimum level of liquidity exists for such securities to allow for the maintenance of fair and orderly markets. In addition, the Exchange will have flexibility to delist a series if circumstances warrant such action.

b. Dissemination of Information

For Currency Trust Shares to be approved for listing on the Exchange, or for trading pursuant to unlisted trading privileges, under the generic listing standards, each issue must satisfy the following requirements: (i) the value of the underlying non-U.S. currency, currencies, or currency index, as the case may be, must be disseminated by one or more major market data vendors on at least a 15-second delayed basis; and (ii) the Intraday Indicative Value must be calculated and widely disseminated by NASDAQ or one or more major market data vendors on at least a 15-second basis during the Regular Market Session. In addition, if either the Intraday Indicative Value or the value of the underlying non-U.S. currency, currencies, or currency index, as the case may be, is not being disseminated as required, the Exchange may halt trading during the day on which such interruption first occurs, and if such interruption persists past the trading day in which it occurred, the Exchange will halt trading no later than the beginning of the trading day following the interruption. Further, if the Exchange becomes aware that the net asset value applicable to a series of Currency Trust Shares is not being disseminated to all market participants at the same time, it will halt trading in such series until such time as the net asset value is available to all market participants. The proposed generic listing standards seek to ensure a minimum level of transparency with respect to key values of the underlying currency assets, and establish events that would trigger a trading halt in Currency Trust Shares when the availability of such key information related to Currency Trust Shares becomes impaired. The Commission believes that the proposed rules are reasonably designed to promote the timely and fair disclosure of useful information that may be necessary to price the Currency Trust Shares appropriately, and to prevent trading when a reasonable degree of transparency cannot be assured.

c. Surveillance

For an issue of Currency Trust Shares to be approved for listing or trading pursuant to unlisted trading provision under the generic listing standards, NASDAQ must implement written surveillance procedures applicable to Currency Trust Shares. The Exchange has represented that trading of Currency Trust Shares on NASDAQ will be subject to FINRA's surveillance procedures for derivative products, and that the Exchange's surveillance procedures applicable to derivative products are adequate to address any concerns about the trading of the Currency Trust Shares on NASDAQ.[142]

d. Other Provisions

NASDAQ has represented that it has a general policy prohibiting the distribution of material, non-public information by its employees. In addition, Currency Trust Shares approved for listing and trading, or trading pursuant to unlisted trading privileges, pursuant to the generic listing standards will be subject to certain firewall requirements. These requirements provide that, if the value of a Currency Trust Share is based in whole or in part on an index that is maintained by a broker-dealer, the broker-dealer shall erect a ''firewall'' around the personnel responsible for the maintenance of the underlying index or who have access to information concerning changes and adjustments to the index, and the index shall be calculated by a third party who is not a broker-dealer. Furthermore, any advisory committee, supervisory board, or similar entity that advises an index licensor or administrator or that makes decisions regarding the index or portfolio composition, methodology, and related matters must implement and maintain, or be subject to, procedures designed to prevent the use and dissemination of material, non-public information regarding the applicable index or portfolio. The Commission believes that the proposed ''firewall'' restrictions applicable to Currency Trust Shares are designed to prevent the use and dissemination of material, non-public information regarding an underlying index and prevent conflicts of interest with respect to personnel of a broker-dealer maintaining an index underlying such securities. NASDAQ has also represented that it has a general policy prohibiting the distribution of material, non-public information by its employees.[143]

The proposed rules contain additional reporting requirements, trading restrictions and books and records obligations on Members acting as registered Market Makers in Currency Trust Shares. The Commission believes that such restrictions, reporting and recordkeeping requirements are reasonably designed to promote a fair and orderly market for Currency Trust Shares and will assist the Exchange in identifying situations potentially susceptible to manipulation.

The proposed rules prescribe prospectus delivery requirements for purchasers of each newly issued series of Currency Trust Shares. Further, the Exchange has represented that prior to the commencement of trading in a series of Currency Trust Shares, the Exchange will inform its Members in an Information Circular of the special characteristics and risks associated with trading the Additional Linked Securities.[144] The Commission believes that the Exchange's proposal should ensure that investors have information that will allow them to be adequately apprised of the terms, characteristics, and risks of trading the Currency Trust Shares.

The Commission notes that the proposed generic listing standards for Currency Trust Shares are substantively identical to those previously approved by the Commission for the listing and trading of Currency Trust Shares on NYSE Arca.[145] As such, the Commission believes that the proposed generic listing standards present no unique or novel regulatory issues and, for the reasons discussed above, are reasonably designed to protect investors and the public interest.

B. Non-Generic Listing Standards

The Exchange is proposing to adopt non-generic listing standards for Trust Certificates, Equity Gold Shares, Commodity-Based Trust Shares, Commodity Index Trust Shares, Commodity Futures Trust Shares, Partnership Units, Trust Units, Managed

[142] *See* Notice at 6848.

[143] *See* Notice at 6848.

[144] *See* Notice at 6847.

[145] *See* NYSE Arca Equities Rule 8.202.

Trust Securities, and Currency Warrants. NASDAQ would be required to file a separate proposed rule change pursuant to Section 19(b) of the Act for each series of such securities NASDAQ seeks to list and/or trade on the Exchange.

1. Trust Certificates

The Commission finds that the Exchange's proposed rules and procedures for the listing and trading of Trust Certificates are consistent with the Act. The Commission believes the Exchange's proposal to list and trade Trust Certificates will benefit investors by increasing competition among markets that trade Trust Certificates. The Commission notes that it has previously approved the adoption of listing standards for Trust Certificates on NYSE Arca.[146]

a. Listing and Trading Rules

The Commission finds that NASDAQ's proposal contains adequate rules and procedures to govern the listing and trading of Trust Certificates. Prior to listing and/or trading on the Exchange, NASDAQ must file a separate proposed rule change pursuant to Section 19(b) of the Act for each series of Trust Certificates. All such Trust Certificates listed and/or traded under proposed Rule 5711(c) will be subject to the full panoply of NASDAQ rules and procedures that currently govern the trading of equity securities on the Exchange including, among others, rules and procedures governing trading halts, surveillance procedures, disclosures to Members, customer suitability requirements, and Market Maker obligations.

The Commission believes that the proposed criteria under proposed Rule 5711(c) and in particular, the continued listing requirements under proposed Commentary .01 thereto, are reasonably designed to protect investors and the public interest. Specifically, the Exchange must commence delisting or removal proceedings with respect to an issue of Trust Certificates if: (i) The aggregate market value or the principal amount publicly held is less than $400,000; (ii) the value of the index or composite value of the indexes is no longer calculated or widely disseminated as required; or (iii) such other event shall occur or condition exists which, in the opinion of the Exchange, makes further dealings in Trust Certificates on the Exchange inadvisable. The Commission believes that the proposed continued listing standards are adequate to ensure transparency of key values and information regarding the Trust Certificates, and will help ensure a minimum level of liquidity exists for such securities to allow for the maintenance of fair and orderly markets. In addition, the Exchange will have flexibility to delist a series if circumstances warrant such action.

b. Dissemination of Information

The Exchange has represented that it may halt trading during the day on which an interruption to the dissemination of the Intraday Indicative Value or the value of the underlying index or assets occurs, and that NASDAQ will halt trading no later than the beginning of trading following the trading day when the interruption began if such interruption persists at that time.[147] In addition, the Exchange has represented that if it becomes aware that the net asset value applicable to a series of Trust Certificates is not being disseminated to all market participants at the same time, it will halt trading in such series until such time as the net asset value is available to all market participants.[148] The Commission believes that the proposal is reasonably designed to promote the timely and fair disclosure of useful information that may be necessary to price the Trust Certificates appropriately, and to prevent trading when a reasonable degree of transparency cannot be assured.

c. Surveillance

Pursuant to the proposed rules, NASDAQ will implement written surveillance procedures applicable to Trust Certificates. The Exchange has represented that trading of Trust Certificates on NASDAQ will be subject to FINRA's surveillance procedures for derivative products, and that the Exchange's surveillance procedures applicable to derivative products are adequate to address any concerns about the trading of the Trust Certificates on NASDAQ.[149]

d. Other Provisions

NASDAQ has represented that it has a general policy prohibiting the distribution of material, non-public information by its employees.[150] In addition, the Exchange has represented that prior to the commencement of trading in a series of Trust Certificates, the Exchange will inform its Members in an Information Circular of the special characteristics and risks associated with trading the Trust Certificates.[151]

The Commission notes that NASDAQ's proposed listing standards for Trust Certificates are substantively identical to the listing standards for Trust Certificates on NYSE Arca.[152] As such, the Commission believes that the proposed listing standards present no unique or novel regulatory issues and, for the reasons discussed above, are reasonably designed to protect investors and the public interest.

2. Commodity-Based Trust Shares, Equity Gold Shares, Commodity Index Trust Shares, Commodity Futures Trust Shares, Partnership Units, and Trust Units

The Commission finds that the Exchange's proposed rules and procedures for the listing and trading of Commodity-Based Trust Shares, Equity Gold Shares, Commodity Index Trust Shares, Commodity Futures Trust Shares, Partnership Units, and Trust Units are consistent with the Act. The Commission believes the Exchange's proposal to list and trade Commodity-Based Trust Shares, Equity Gold Shares, Commodity Index Trust Shares, Commodity Futures Trust Shares, Partnership Units, and Trust Units will benefit investors by increasing competition among markets that trade such products. The Commission notes that it has previously approved the adoption of listing standards for Commodity-Based Trust Shares, Equity Gold Shares, Commodity Index Trust Shares, Commodity Futures Trust Shares, Partnership Units, and Trust Units on NYSE Arca.[153]

a. Listing and Trading Rules

The Commission finds that the Exchange's proposal contains adequate rules and procedures to govern the

[146] *See* Securities Exchange Act Release No. 59051 (December 4, 2008), 73 FR 75155 (December 10, 2008) (SR–NYSEArca–2008–123) (approving listing standards for Trust Certificates).

[147] *See* Notice at 6848.

[148] *See* Notice at 6848–6849.

[149] *See* Notice at 6848.

[150] *See* Notice at 6848.

[151] *See* Notice at 6847.

[152] *See* NYSE Arca Equities Rule 5.2(j)(7).

[153] *See* Securities Exchange Act Release Nos. 51067 (January 21, 2005), 70 FR 3952 (January 27, 2005) (SR–PCX–2004–132) (approving listing standards for Commodity-Based Trust Shares); 51245 (February 23, 2005), 70 FR 10731 (March 4, 2005) (SR–PCX–2004–117) (approving the trading of Equity Gold Shares); 53253 (February 8, 2006), 71 FR 8029 (February 15, 2006) (SR–PCX–2005–123) (approving listing standards for Currency Trust Shares); 54025 (June 21, 2006), 71 FR 36856 (June 28, 2006) (SR–NYSEArca–2006–12) (approving listing standards for Commodity-Indexed Trust Shares); 57838 (May 20, 2008), 73 FR 30649 (May 28, 2008) (SR–NYSEArca–2008–09); 53875 (May 25, 2006), 71 FR 32164 (June 2, 2006) (SR–NYSEArca–2006–11) (approving listing standards for Partnership Shares); and 57059 (December 28, 2007), 73 FR 909 January 4, 2008) (SR–NYSEArca–2006–76) (approving listing standards for Trust Units).

listing and trading of Commodity-Based Trust Shares, Equity Gold Shares,[154] Commodity Index Trust Shares, Commodity Futures Trust Shares, Partnership Units, and Trust Units on the Exchange. Prior to listing and/or trading on the Exchange, NASDAQ must file a separate proposed rule change pursuant to Section 19(b) of the Act for each series of Commodity-Based Trust Shares, Equity Gold Shares, Commodity Index Trust Shares, Commodity Futures Trust Shares, Partnership Units, Trust Units and Managed Trust Shares. All such securities listed and/or traded will be subject to the full panoply of NASDAQ's rules and procedures that currently govern the trading of equity securities on the Exchange including, among others, rules and procedures governing trading halts, surveillance procedures, disclosures to Members, customer suitability requirements, and Market Maker obligations. For the initial listing of each series of Commodity-Based Trust Shares, Equity Gold Shares, Commodity Index Trust Shares, Commodity Futures Trust Shares, Partnership Units, and Trust Units, the Exchange must establish a minimum number of such securities required to be outstanding at the commencement of trading on the Exchange. In addition, for the initial listing of Trust Units, NASDAQ must obtain a representation from the issuer of a series of Trust Units that the net asset value per share for the series will be calculated daily and will be made available to all market participants at the same time.

As further discussed above, the Exchange may consider suspending trading in, or removing from listing, a series of Commodity-Based Trust Shares, Equity Gold Shares, Commodity Index Trust Shares, Commodity Futures Trust Shares, Partnership Units, or Trust Units if there are fewer than 50 record and/or or beneficial holders of such series for 30 or more consecutive trading days. In addition, with respect to Commodity-Based Trust Shares, Equity Gold Shares, Commodity Futures Trust Shares, Partnership Units, and Trust Units, the Exchange may consider suspending trading in, or removing from listing, a series if there are fewer than 50,000 such securities issued and outstanding or if the market value of all such securities issued and outstanding is less than $1,000,000. The Exchange may also consider suspending trading in, or removing from listing, a series of Commodity-Based Trust Shares, Equity Gold Shares, Commodity Index Trust Shares, Commodity Futures Trust Shares, or Partnership Units if the value of the underlying benchmark is no longer calculated or available on at least a 15-second delayed basis from an unaffiliated source, or the Intraday Indicative Value is no longer made available on at least a 15-second delayed basis. In the case of Commodity Index Trust Shares and Commodity Futures Trust Shares, the Exchange may further consider suspending trading in, or removing from listing, a series if the net asset value for such series is no longer disseminated to all market participants at the same time. Finally, the Exchange may consider suspending trading in, or removing from listing, such securities if such other event shall occur or condition exists which in the opinion of NASDAQ makes further dealings on NASDAQ inadvisable.

The Commission believes that the proposed initial and continued listing standards are adequate to ensure transparency of key values and information regarding the Commodity-Based Trust Shares, Equity Gold Shares, Commodity Index Trust Shares, Commodity Futures Trust Shares, Partnership Units, and Trust Units, and will help ensure a minimum level of liquidity exists for such securities to minimize the potential for manipulation and allow for the maintenance of fair and orderly markets. In addition, the Exchange will have flexibility to delist a series if circumstances warrant such action.

b. Dissemination of Information

The Exchange has represented that it may halt trading during the day on which an interruption to the dissemination of the Intraday Indicative Value or the value of the underlying index or assets occurs, and that NASDAQ will halt trading no later than the beginning of trading following the trading day when the interruption began if such interruption persists at that time.[155] In addition, the Exchange has represented that if it becomes aware that the net asset value applicable to a series of Commodity-Based Trust Shares, Equity Gold Shares, Commodity Index Trust Shares, Commodity Futures Trust Shares, Partnership Units, or Trust Units is not being disseminated to all market participants at the same time, it will halt trading in such series until such time as the net asset value is available to all market participants.[156] The Commission believes that the proposal is reasonably designed to promote the timely and fair disclosure of useful information that may be necessary to price the Commodity-Based Trust Shares, Equity Gold Shares, Commodity Index Trust Shares, Commodity Futures Trust Shares, Partnership Units, and Trust Units appropriately, to prevent trading when a reasonable degree of transparency cannot be assured, and to maintain a fair and orderly market for such securities.

c. Surveillance

The Exchange has represented that trading of Commodity-Based Trust Shares, Equity Gold Shares, Commodity Index Trust Shares, Commodity Futures Trust Shares, Partnership Units, and Trust Units on NASDAQ will be subject to FINRA's surveillance procedures for derivative products, and that the Exchange's surveillance procedures applicable to derivative products are adequate to address any concerns about the trading of the Trust Certificates on NASDAQ.[157] In addition, the proposed rules require NASDAQ to implement written surveillance procedures for Commodity Futures Trust Shares.

d. Other Provisions

The proposed rules impose additional reporting requirements, trading restrictions and books and records obligations on Members acting as registered Market Makers in Commodity-Based Trust Shares, Equity Gold Shares, Commodity Index Trust Shares, Commodity Futures Trust Shares, Partnership Units, and Trust Units. The Commission believes that such restrictions, reporting and record-keeping requirements are reasonably designed to promote a fair and orderly market for Commodity-Based Trust Shares, Equity Gold Shares, Commodity Index Trust Shares, Commodity Futures Trust Shares, Partnership Units, and Trust Units, and will assist the Exchange in identifying situations potentially susceptible to manipulation.

NASDAQ has represented that it has a general policy prohibiting the distribution of material, non-public information by its employees. In addition, the proposed rules prescribe prospectus delivery requirements for purchasers of each newly issued series of Commodity-Based Trust Shares, Equity Gold Shares, Commodity Index

[154] The proposed listing rules for Equity Gold Shares provide that the provisions set forth in proposed Rule 5711(d) (Commodity-Based Trust Shares) will apply to Equity Gold Shares. Thus, all of the listing requirements applicable to Commodity-Based Trust Shares will also apply to Equity Gold Shares.

[155] *See* Notice at 6848. A similar requirement is contained in the proposed rules relating to Currency Trust Shares, Commodity Futures Trust Shares and Trust Units.

[156] *See* Notice at 6848–6849. A similar requirement is contained in the proposed rules relating to Currency Trust Shares, Commodity Futures Trust Shares and Trust Units.

[157] *See* Notice at 6848.

Trust Shares, Commodity Futures Trust Shares, Partnership Units and Trust Units. Further, the Exchange has represented that prior to the commencement of trading in a series of Commodity-Based Trust Shares, Equity Gold Shares, Commodity Index Trust Shares, Commodity Futures Trust Shares, Partnership Units, and Trust Units, the Exchange will inform its Members in an Information Circular of the special characteristics and risks associated with trading such securities.[158]

The Commission notes that NASDAQ's proposed listing standards for Commodity-Based Trust Shares, Equity Gold Shares, Commodity Index Trust Shares, Commodity Futures Trust Shares, Partnership Units, and Trust Units are substantively identical to the listing standards for such securities on NYSE Arca.[159] As such, the Commission believes that the proposed listing standards for these securities present no unique or novel regulatory issues and, for the reasons discussed above, are reasonably designed to protect investors and the public interest.

3. Managed Trust Securities

The Commission finds that the Exchange's proposed rules and procedures for the listing and trading of Managed Trust Securities are consistent with the Act. The Commission believes the Exchange's proposal to list and trade Managed Trust Securities will benefit investors by increasing competition among markets that trade Managed Trust Securities. The Commission notes that it has previously approved the adoption of listing standards for Managed Trust Securities on NYSE Arca.[160]

a. Listing and Trading Rules

The Commission finds that NASDAQ's proposal contains adequate rules and procedures to govern the listing and trading of Managed Trust Securities. Prior to listing and/or trading on the Exchange, NASDAQ must file a separate proposed rule change pursuant to Section 19(b) of the Act for each series of Managed Trust Securities. All Managed Trust Securities listed and/or traded on NASDAQ will be subject to the full panoply of NASDAQ rules and procedures that currently govern the trading of equity securities on the Exchange including, among others, rules and procedures governing trading halts, surveillance procedures, disclosures to Members, customer suitability requirements, and Market Maker obligations. For the initial listing of each series of Managed Trust Securities, the Exchange must establish a minimum number of Managed Trust Securities required to be outstanding at the commencement of trading. In addition, the Exchange must obtain a representation from the issuer of Managed Trust Securities that the NAV per share will be calculated daily and that the NAV and the Disclosed Portfolio will be made available to all market participants at the same time.

For continued listing of each series of Managed Trust Securities, the Intraday Indicative Value must be widely disseminated by one or more major market data vendors at least every 15 seconds during the time when the Managed Trust Securities trade on the Exchange. Further, the Disclosed Portfolio must be disseminated at least once daily and made available to all market participants at the same time. The Exchange may also consider the suspension of trading in, or removal from listing of, a series of Managed Trust Securities if: (i) Following the initial twelve-month period after commencement of trading on the Exchange of a series of Managed Trust Securities, (A) the trust has fewer than 50,000 securities issued and outstanding, (B) the market value of all securities issued and outstanding is less than $1,000,000, or there are fewer than 50 beneficial holders of such series for 30 or more consecutive trading days; (ii) the Intraday Indicative Value is no longer calculated or available or the Disclosed Portfolio is not made available to all market participants at the same time; (iii) the trust has failed to file any filings required by the Commission or if the Exchange becomes aware that the trust is not in compliance with the conditions of any exemptive order or no-action relief granted by the Commission to the trust with respect to the series of Managed Trust Securities; or (iv) such other event shall occur or condition exists which in the opinion of the Exchange makes further dealings on the Exchange inadvisable.

The Commission believes that the proposed initial and continued listing and trading standards for Managed Trust Securities are adequate to ensure transparency of key values and information regarding the securities, and will help ensure a minimum level of liquidity exists for such securities to allow for the maintenance of fair and orderly markets. In addition, the Exchange will have flexibility to delist a series if circumstances warrant such action.

b. Dissemination of Information

The Commission finds that the Exchange's proposed rules with respect to trading halts should help ensure the availability of key values and information relating to Managed Trust Securities and to prevent trading when a reasonable degree of transparency cannot be assured. Under the proposal, if the Intraday Indicative Value is not being disseminated as required, the Exchange may halt trading during the day in which the interruption to the dissemination of the Intraday Indicative Value occurs. If the interruption of such value persists past the trading day in which it occurred, the Exchange must halt trading no later than the beginning of the trading day following the interruption.[161] In addition, if the Exchange becomes aware that the NAV or Disclosed Portfolio related to a series of Managed Trust Securities is not being disseminated to all market participants at the same time, the Exchange will halt trading in such series of Managed Trust Securities until such time as the NAV or the Disclosed Portfolio is available to all market participants.

c. Surveillance

Pursuant to the proposed rules, NASDAQ will implement written surveillance procedures applicable to Managed Trust Securities. The Exchange has represented that trading of Managed Trust Securities on NASDAQ will be subject to FINRA's surveillance procedures for derivative products, and that the Exchange's surveillance procedures applicable to derivative products are adequate to address any concerns about the trading of the Managed Trust Securities on NASDAQ.[162]

d. Other Provisions

NASDAQ has represented that it has a general policy prohibiting the distribution of material, non-public information by its employees.[163] In addition, the proposed rules require that: (i) If the trust's advisor is affiliated with a broker-dealer, the broker-dealer

[158] *See* Notice at 6847.

[159] *See* NYSE Arca Equities Rules 8.201 (Commodity-Based Trust Shares), 5.2(j)(5) (Equity Gold Shares), 8.202 (Currency Trust Shares), 8.203 (Commodity Index Trust Shares), 8.204 (Commodity Futures Trust Shares), 8.300 (Partnership Units), and 8.500 (Trust Units).

[160] *See* Securities Exchange Act Release No. 60064 (June 8, 2009), 74 FR 113 (June 15, 2009) (SR–NYSEArca-2009–30) (approving listing standards for Managed Trust Securities).

[161] If a series of Managed Trust Securities is trading on the Exchange pursuant to unlisted trading privileges, the Exchange will halt trading in that series, as specified in NASDAQ Rules 4120(a) or (b), as applicable. *See* NASDAQ Rule 4120 (setting forth rules regarding trading halts for certain derivative securities products).

[162] *See* Notice at 6848.

[163] *See* Notice at 6848.

must erect a ''firewall'' around the personnel who have access to information concerning changes and adjustments to the Disclosed Portfolio; (ii) personnel who make decisions on the trust's portfolio composition must be subject to procedures designed to prevent the use and dissemination of material nonpublic information regarding the applicable trust portfolio; and (iii) the Reporting Authority that provides the Disclosed Portfolio implement and maintain, or be subject to, procedures designed to prevent the use and dissemination of material, non-public information regarding the actual components of the portfolio. The Commission believes that the proposed ''firewall'' restrictions applicable to Managed Trust Securities are reasonably designed to prevent the use and dissemination of material, non-public information regarding the Disclosed Portfolio, prevent conflicts of interest with respect to personnel of a broker-dealer maintaining the Disclosed Portfolio and to promote fair and orderly markets.

The proposed rules prescribe prospectus delivery requirements for purchasers of each newly issued series of Managed Trust Securities. In addition, the Exchange has represented that prior to the commencement of trading in a series of Managed Trust Securities, the Exchange will inform its Members in an Information Circular of the special characteristics and risks associated with trading the Managed Trust Securities.[164]

The proposed rules impose additional reporting requirements, trading restrictions and books and records obligations on registered Market Makers in Managed Trust Securities. The Commission believes that such restrictions, reporting and record-keeping requirements are reasonably designed to promote a fair and orderly market for Managed Trust Securities, and will assist the Exchange in identifying situations potentially susceptible to manipulation.

The Commission notes that NASDAQ's proposed listing standards for Managed Trust Securities are substantively identical to the listing standards for Managed Trust Securities on NYSE Arca.[165] As such, the Commission believes that the proposed listing standards present no unique or novel regulatory issues and, for the reasons discussed above, are reasonably designed to protect investors and the public interest.

4. Currency Warrants

The Commission finds that the Exchange's proposed rules and procedures for the listing and trading of Currency Warrants are consistent with the Act. The Commission believes the Exchange's proposal to list and trade Currency Warrants will benefit investors by increasing competition among markets that trade Currency Warrants. The Commission notes that it has approved the adoption of listing standards and related rules for Currency Warrants on the New York Stock Exchange (''NYSE'') and NYSE Arca.[166]

a. Listing and Trading Rules

The Commission finds that NASDAQ's proposal contains adequate rules and procedures to govern the listing and trading of Currency Warrants. Prior to listing and/or trading on the Exchange, NASDAQ must file a separate proposed rule change pursuant to Section 19(b) of the Act for each series of Currency Warrants, and the listing of Currency Warrants will be considered on a case-by-case basis. The Exchange has represented that Currency Warrants are deemed to be equity securities, thus rendering trading in Currency Warrants subject to the Exchange's existing rules governing the trading of equity securities.[167]

The Commission is satisfied with the Exchange's development of specific listing criteria for Currency Warrants. As described more fully above, the proposed listing criteria include minimum tangible net worth and earnings requirements for issuers. These criteria are, in part, intended to ensure that the issuer has enough assets to meet its obligations under the terms of the warrant and should help to reduce systematic risk. The proposed listing criteria also include minimum holder, distribution and market value requirements, which should serve to establish a minimum level of liquidity for each series of Currency Warrants to allow for maintenance of fair and orderly markets.

b. Dissemination of Information

The proposed rules provide that trading on NASDAQ in any Currency Warrant shall be halted whenever NASDAQ deems such action appropriate in the interests of a fair and orderly market or to protect investors. Trading in Currency Warrants that have been the subject of a halt or suspension by NASDAQ may resume if NASDAQ determines that the conditions which led to the halt or suspension are no longer present, or that the interests of a fair and orderly market are best served by a resumption of trading. In addition, the Exchange has represented that it may halt trading in a series of Currency Warrants during the day on which an interruption to the dissemination of the Intraday Indicative Value or the value of the underlying currency occurs, and that NASDAQ will halt trading no later than the beginning of trading following the trading day when the interruption began if such interruption persists at that time.[168] The Commission believes that the proposal is reasonably designed to promote the timely and fair disclosure of useful information that may be necessary to price the Currency Warrants appropriately, and to prevent trading when a reasonable degree of transparency cannot be assured.

c. Surveillance

The Exchange has represented that trading of Currency Warrants on NASDAQ will be subject to FINRA's surveillance procedures for derivative products, and that the Exchange's surveillance procedures applicable to derivative products are adequate to address any concerns about the trading of the Currency Warrants on NASDAQ.[169]

d. Other Provisions

Due to their derivative and leveraged nature, and the fact that they are a wasting asset, many of the risks of trading in warrants are similar to the risks of trading standardized options. Accordingly, the Exchange has proposed to apply its options customer protection rules to Currency Warrants. In particular, the Commission notes that Currency Warrants will only be sold to options-approved accounts in accordance with NOM Rules, Chapter XI, Section 7. In addition, the Exchange will apply the options rules for suitability, discretionary accounts, supervision of accounts and public customer complaints to transactions in Currency Warrants, and that Members participating in Currency Warrants shall be bound to comply with the Communications and Disclosures rule of FINRA.

The proposed rules establish reporting requirements for Members holding large positions in Currency

[164] *See* Notice at 6847.

[165] *See* NYSE Arca Equities Rule 8.700.

[166] *See* Securities Exchange Act Release No. 34–36165 (Aug. 29, 1995), 60 FR 46653 (Sept. 7, 1995) (SR–NYSE–94–41) (approving the listing and trading of currency warrants on the NYSE). *See also* Securities Exchange Act Release No. 59886 (May 7, 2009), 74 FR 22779 (May 14, 2009) (SR–NYSEArca–2009–39) (amending NYSE Arca Equities Rule 8.3 (Listing of Currency and Index Warrants)).

[167] *See* Notice at 6848.

[168] *See* Notice at 6848.

[169] *See* Notice at 6848.

Warrants. The Commission believes that such reporting requirements are reasonably designed to promote a fair and orderly market for Currency Warrants, and will assist the Exchange in identifying situations potentially susceptible to manipulation.

NASDAQ has represented that it has a general policy prohibiting the distribution of material, non-public information by its employees.[170] In addition, the Exchange has represented that prior to the commencement of trading in a series of Currency Warrants, the Exchange will inform its Members in an Information Circular of the special characteristics and risks associated with trading the Currency Warrants.[171]

The Commission notes that NASDAQ's proposed listing standards and regulatory requirements relating to Currency Warrants are substantively identical to the listing standards and regulatory requirements for Currency Warrants listed and traded on NYSE Arca.[172] As such, the Commission believes that the proposed listing standards present no unique or novel regulatory issues and, for the reasons discussed above, are reasonably designed to protect investors and the public interest.

C. Additional Representations

As discussed above, the Exchange has represented that the Subject Securities are deemed to be equity securities, thus rendering trading in the Subject Securities subject to the Exchange's existing rules governing the trading of equity securities. In support of this proposal, the Exchange has made representations, including:

(1) The Exchange has appropriate rules to facilitate transactions in the Subject Securities during all trading sessions.

(2) The Exchange's surveillance procedures applicable to derivative products are adequate to address any concerns about the trading of the Subject Securities on NASDAQ. The Exchange may obtain information via the ISG from other exchanges who are members or affiliates of the ISG.

(3) The Exchange has a general policy prohibiting the distribution of material, non-public information by its employees.

(4) To the extent a Subject Security holds investments in futures contracts, not more than 10% of the weight of such futures contracts in the aggregate shall consist of components whose principal trading market is not a member of ISG or is a market with which the Exchange does not have a comprehensive surveillance sharing agreement.

(5) Prior to the commencement of trading, the Exchange will inform its Members in an Information Circular of the special characteristics and risks associated with trading the Subject Securities. Specifically, the Information Circular will discuss the following: (a) The risks involved in trading the Subject Securities during the Opening Process and Post-Market Sessions when an updated Intraday Indicative Value will not be calculated or publicly disseminated and, if applicable, the risks involved in trading the Subject Securities during the Regular Market Session when the Intraday Indicative Value may be static or based in part on the fluctuation of currency exchange rates when the underlying markets have closed prior to the close of NASDAQ's Regular Market Session; (b) the procedures for purchases and redemptions of the Subject Securities (and/or that the Subject Securities are not individually redeemable); (c) NASDAQ Rule 2310, which imposes suitability obligations on Members with respect to recommending transactions in the securities to customers; (d) how information regarding the Intraday Indicative Value is disseminated; (e) the requirement that Members deliver a prospectus to investors purchasing newly issued Subject Securities prior to or concurrently with the confirmation of a transaction; and (f) trading information.

(6) NASDAQ may consider all relevant factors in exercising its discretion to halt or suspend trading in the Subject Securities. Trading in the Subject Securities may be halted because of market conditions or for reasons that, in the view of NASDAQ, make trading in the securities inadvisable. These may include: (a) The extent to which trading in the underlying asset or assets is not occurring; or (b) whether other unusual conditions or circumstances detrimental to the maintenance of a fair and orderly market are present.[173]

(7) Prior to the commencement of trading of any inverse, leveraged, or inverse leveraged Subject Securities, NASDAQ will inform its Members of the suitability requirements of NASDAQ Rule 2310 in the Information Circular.[174] The Information Circular will also reference, among other things, the FINRA Regulatory Notices regarding sales practice and customer margin requirements for FINRA members applicable to leveraged exchange-traded products and options thereon. Members that carry customer accounts will be required to follow the FINRA guidance set forth in the FINRA Regulatory Notices.

This approval order is based on all of the Exchange's representations. The Commission again notes that the proposed listing standards for the Subject Securities are substantively identical to previously approved listing standards for the corresponding products on NYSE Arca.[175]

The Commission believes that the proposal should help to facilitate the listing and trading of additional types of exchange-traded products that should enhance competition among market participants, to the benefit of investors and the marketplace. In addition, the Commission believes that the listing and trading criteria for the Subject Securities

[170] *See* Notice at 6848.

[171] *See* Notice at 6847.

[172] *See* NYSE Arca Equities Rules 8.3 (Listing of Currency and Index Warrants), 8.4 (Account Approval), 8.5 (Suitability), 8.6 (Discretionary Accounts), 8.7 (Supervision of Accounts), 8.8 (Customer Complaints), 8.9 (Prior Approval of Certain Communications to Customers), 8.12 (Trading Halts or Suspensions), and 8.13 (Reporting of Warrant Positions).

[173] In addition, trading in the Subject Securities will be subject to trading halts caused by extraordinary market volatility pursuant to NASDAQ's ''circuit breaker'' Rule 4120(a)(11) or by the halt or suspension of the trading of the current underlying asset or assets. If the applicable Intraday Indicative Value, value of the underlying index, or the value of the underlying asset or assets (*e.g.,* securities, commodities, currencies, futures contracts, or other assets) is not being disseminated as required, NASDAQ may halt trading during the day in which such interruption to the dissemination occurs. If the interruption to the dissemination of the applicable Intraday Indicative Value, value of the underlying index, or the value of the underlying asset or assets persists past the trading day in which it occurred, NASDAQ will halt trading no later than the beginning of the trading day following the interruption. In addition, if NASDAQ becomes aware that the net asset value with respect to a series of the Subject Securities is not disseminated to all market participants at the same time, it will halt trading in such series until such time as the net asset value is available to all market participants.

[174] Specifically, Members will be reminded in the Information Circular that, in recommending transactions in these securities, they must have a reasonable basis to believe that (1) the recommendation is suitable for a customer given reasonable inquiry concerning the customer's investment objectives, financial situation, needs, and any other information known by such Member, and (2) the customer can evaluate the special characteristics, and is able to bear the financial risks, of an investment in the securities. In connection with the suitability obligation, the Information Circular will also provide that Members must make reasonable efforts to obtain the following information: (1) the customer's financial status; (2) the customer's tax status; (3) the customer's investment objectives; and (4) such other information used or considered to be reasonable by such Member or registered representative in making recommendations to the customer.

[175] *See supra* notes 109, 116, 129, 138, 145, 152, 159, 165, and 172.

set forth in amended Rule 5710 and proposed Rule 5711 are reasonably designed to protect investors and the public interest, as discussed herein. For the foregoing reasons, the Commission finds that the proposed rule change, as amended, is consistent with the Act and the rules and regulations thereunder applicable to a national securities exchange, and, in particular, with Section 6(b)(5) of the Act.[176]

IV. Conclusion

It is therefore ordered, pursuant to Section 19(b)(2) of the Act,[177] that the proposed rule change (SR–NASDAQ–2012–013), as modified by Amendment No. 1 thereto, be, and it hereby is, approved.

For the Commission, by the Division of Trading and Markets, pursuant to delegated authority.[178]

Kevin M. O'Neill,

Deputy Secretary.

[FR Doc. 2012–7516 Filed 3–29–12; 8:45 am]

BILLING CODE 8011–01–P

[176] 15 U.S.C. 78f(b)(5).

[177] 15 U.S.C. 78s(b)(2).

[178] 17 CFR 200.30–3(a)(12).

FEDERAL REGISTER

Vol. 77 Friday,

No. 62 March 30, 2012

Part III

Department of Labor

Office of Workers' Compensation Programs

20 CFR Parts 718 and 725

Regulations Implementing the Byrd Amendments to the Black Lung Benefits Act: Determining Coal Miners' and Survivors' Entitlement to Benefits; Proposed Rule

DEPARTMENT OF LABOR

Office of Workers' Compensation Programs

20 CFR Parts 718 and 725

RIN 1240–AA04

Regulations Implementing the Byrd Amendments to the Black Lung Benefits Act: Determining Coal Miners' and Survivors' Entitlement to Benefits

AGENCY: Office of Workers' Compensation Programs, Labor.

ACTION: Notice of proposed rulemaking; request for comments.

SUMMARY: This document contains proposed regulations implementing amendments to the Black Lung Benefits Act (BLBA or Act) made by the Patient Protection and Affordable Care Act (ACA). The ACA amended the BLBA in two ways. First, it revived a rebuttable presumption of total disability or death due to pneumoconiosis for certain claims. Second, it reinstituted derivative entitlement to benefits for certain eligible survivors of coal miners whose lifetime benefit claims were awarded because they were totally disabled due to pneumoconiosis. These survivors need not also prove that the miner died due to coal workers' pneumoconiosis. The proposed rules would clarify how the statutory presumption may be invoked and rebutted and the application and scope of the derivative-survivor-entitlement provision. The proposed rules also eliminate several unnecessary or obsolete provisions.

DATES: The Department invites written comments on the proposed regulations from interested parties. Written comments must be received by May 29, 2012.

ADDRESSES: You may submit written comments, identified by RIN number 1240–AA04, by any of the following methods. To facilitate receipt and processing of comments, OWCP encourages interested parties to submit their comments electronically.

- *Federal eRulemaking Portal: http://www.regulations.gov.* Follow the instructions on the Web site for submitting comments.
- *Facsimile:* (202) 693–1395 (this is not a toll-free number). Only comments of ten or fewer pages, including a fax cover sheet and attachments, if any, will be accepted by Fax.
- *Regular Mail:* Submit comments on paper, disk, or CD–ROM to the Division of Coal Mine Workers' Compensation Programs, Office of Workers' Compensation Programs, U.S. Department of Labor, Room C–3520, 200 Constitution Avenue NW., Washington, DC 20210. The Department's receipt of U.S. mail may be significantly delayed due to security procedures. You must take this into consideration when preparing to meet the deadline for submitting comments.
- *Hand Delivery/Courier:* Submit comments on paper, disk, or CD–ROM to Division of Coal Mine Workers' Compensation Programs, Office of Workers' Compensation Programs, U.S. Department of Labor, Room C–3520, 200 Constitution Avenue NW., Washington, DC 20210.

Instructions: All submissions received must include the agency name and the Regulatory Information Number (RIN) for this rulemaking. All comments received will be posted without change to *http://www.regulations.gov,* including any personal information provided.

Docket: For access to the docket to read background documents or comments received, go to *http://www.regulations.gov.*

FOR FURTHER INFORMATION CONTACT: Michael McClaran, Deputy Director, Division of Coal Mine Workers' Compensation, Office of Workers' Compensation Programs, U.S. Department of Labor, 200 Constitution Avenue NW., Suite N–3464, Washington, DC 20210. Telephone: (202) 693–0978 (this is not a toll-free number). TTY/TDD callers may dial toll-free 1–800–877–8339 for further information.

SUPPLEMENTARY INFORMATION:

I. Background of This Rulemaking

The BLBA, 30 U.S.C. 901–944, provides for the payment of benefits to coal miners and certain of their dependent survivors on account of total disability or death due to coal workers' pneumoconiosis. 30 U.S.C. 901(a); *Usery* v. *Turner Elkhorn Mining Co.,* 428 U.S. 1, 5 (1976). Benefits are paid by either an individual coal mine operator that employed the coal miner (or its insurance carrier), or the Black Lung Disability Trust Fund. *Director, OWCP* v. *Bivens,* 757 F.2d 781, 783 (6th Cir. 1985). The purpose of this rulemaking is to implement the amendments to the BLBA made by the ACA, Public Law 111–148, 1556, 124 Stat. 119, 260 (2010). These amendments reinstate two BLBA entitlement provisions—Section 411(c)(4) and Section 422(l), 30 U.S.C. 921(c)(4); 932(l)—that had been repealed with respect to claims filed on or after January 1, 1982. The history of these provisions is described below.

A. Section 411(c)(4): the ''Fifteen-Year Presumption''

In 1972, Congress amended the BLBA to include Section 411(c)(4), known as the ''15-year presumption,'' 30 U.S.C. 921(c)(4) (1970 ed., Supp. IV), which assisted claimants in proving that a totally disabled miner's disability or death was due to pneumoconiosis. The presumption could be invoked if the miner (1) ''was employed for fifteen years or more in one or more underground coal mines'' or in surface mines in which conditions were ''substantially similar to conditions in an underground mine'' and (2) suffered from ''a totally disabling respiratory or pulmonary impairment[.]'' *Id.* If those criteria were met, the claimant invoked a rebuttable presumption that the miner ''is totally disabled due to pneumoconiosis, that his death was due to pneumoconiosis, or that at the time of his death he was totally disabled by pneumoconiosis.'' *Id.* The presumption could be rebutted by demonstrating that the miner ''does not, or did not, have pneumoconiosis'' or that ''his respiratory or pulmonary impairment did not arise out of, or in connection with, employment in a coal mine.'' *Id.* Based on the Surgeon General's testimony that the prevalence of pneumoconiosis increased significantly after 15 years of coal dust exposure, the presumption's purpose was to ''[r]elax the often insurmountable burden of proving eligibility'' that claimants had faced. S. Rep. No. 92–743, at 1 (1972).

B. Section 422(l): Derivative Survivor's Entitlement

Section 422(l) was added to the BLBA by the Black Lung Benefits Reform Act of 1977, Public Law 95–239, 7(h), 92 Stat. 95, 100 (1978). Section 422(l) originally provided that ''[i]n no case shall the eligible survivors of a miner who was determined to be eligible to receive benefits under this title at the time of his or her death be required to file a new claim for benefits, or refile or otherwise revalidate the claim of such miner.'' *Id.* This provision allowed an eligible survivor of a miner to establish entitlement to benefits based solely on the fact that the miner had been awarded benefits on a claim filed during his lifetime because he was totally disabled due to pneumoconiosis. *Pothering* v. *Parkson Coal Co.,* 861 F.2d 1321, 1327 (3d Cir. 1988).

C. Effect of the 1981 BLBA Amendments on Sections 411(c)(4), 422(l), and Other Provisions

The Black Lung Benefits Amendments of 1981, Public Law 97–119, 202(b)(1),

203(a)(6), 95 Stat. 1635, 1644 (1981), prospectively eliminated both the 15-year presumption and the provision for derivative-survivors' entitlement. Congress restricted the 15-year presumption by adding the following sentence to Section 411(c)(4): ''The provisions of this paragraph shall not apply with respect to claims filed on or after the effective date of the Black Lung Benefits Amendments of 1981.'' 30 U.S.C. 921(c)(4) (1982). Accordingly, the presumption did not apply to claims filed on or after January 1, 1982, the effective date of the 1981 amendments. For such claims, miners and their survivors were required to prove a causal nexus between the miner's respiratory impairment or death and pneumoconiosis by a preponderance of the evidence (unless aided by one of the remaining presumptions).

Congress added similar language to Section 422(l) to eliminate derivative entitlement for survivors who filed claims on or after the effective date of the 1981 amendments. 30 U.S.C. 932(l) (1982). At the same time, the 1981 amendments eliminated a survivor's ability to establish entitlement by demonstrating that the miner was totally disabled due to pneumoconiosis at the time of his death. As a consequence of these amendments, a survivor who filed a claim on or after January 1, 1982 could establish entitlement only by proving (either through direct evidence or the remaining presumptions) that the miner's death was due to pneumoconiosis, with one limited exception. *Mancia* v. *Director, OWCP,* 130 F.3d 579, 584 n.6 (3d Cir. 1997). That exception was for survivors who filed a claim prior to June 30, 1982, who could establish eligibility under the Section 411(c)(5) presumption of entitlement, 30 U.S.C. 921(c)(5).

In addition to the changes to Sections 411(c)(4) and 422(l), the 1981 amendments revised two other statutory presumptions, both of which are relevant to the rules the Department now proposes. First, for survivors who filed claims on or after January 1, 1982, Congress eliminated a rebuttable presumption that the miner's death was due to pneumoconiosis if the miner worked in coal mines for at least 10 years and died from a respirable disease. 30 U.S.C. 921(c)(2). Second, for survivors who filed claims on or after June 30, 1982, Congress eliminated a rebuttable presumption of entitlement to benefits where the miner worked at least 25 years in coal mine employment prior to June 30, 1971 and died prior to March 1, 1978. 30 U.S.C. 921(c)(5).

The 1981 amendments left intact only two entitlement presumptions contained in Section 411(c). One provides a rebuttable presumption that a miner's pneumoconiosis arose out of his coal mine employment if the miner worked in such employment for at least 10 years. 30 U.S.C. 921(c)(1). And the other provides that a miner with ''complicated'' pneumoconiosis, the most advanced form of the disease, *see Usery,* 428 U.S. at 7, is irrebuttably presumed to be totally disabled due to, or to have died from, pneumoconiosis, 30 U.S.C. 921(c)(3).

D. Patient Protection and Affordable Care Act

In 2010, Section 1556 of the ACA restored the Section 411(c)(4) 15-year presumption and Section 422(l)'s provision for derivative survivors' entitlement for certain claims. Public Law 111–148, 1556, 124 Stat. 119, 260 (2010). ACA Section 1556 has three subsections. Subsection (a), entitled ''Rebuttable Presumption,'' amended Section 411(c)(4) by deleting the section's last sentence—the language inserted by the 1981 amendments—which had restricted the presumption's application to claims filed before January 1, 1982. Subsection (b), entitled ''Continuation of Benefits,'' amended Section 422(l) by deleting the similarly restrictive language added to that section by the 1981 amendments. Finally, subsection (c), entitled ''Effective Date,'' provides that ''[t]he amendments made by this section shall apply with respect to claims filed under part B or part C of the Black Lung Benefits Act (30 U.S.C. 921 *et seq.,* 931 *et seq.*) after January 1, 2005, that are pending on or after the date of enactment of this Act.'' The ACA was enacted on March 23, 2010, when the President signed it into law.

As a result of these amendments, a miner or survivor who files his or her claim after January 1, 2005 may now rely on the 15-year presumption in establishing entitlement to benefits, provided that the claim was pending on or after March 23, 2010 and the presumption's requirements for invocation are met. In addition, survivors whose claims meet the effective-date requirements may not be required to prove that the miner's death was due to pneumoconiosis to be entitled to benefits. Assuming that the BLBA's other conditions of entitlement (such as relationship and dependency) are met, the survivor is entitled to benefits if the miner was awarded benefits based on a lifetime claim because he was totally disabled due to pneumoconiosis.

II. Summary of the Proposed Rule

The proposed regulations are primarily intended to implement amended Sections 411(c)(4) and 422(l) by revising existing regulations. The Department has also reviewed these rules in accordance with Executive Order 13563 (January 18, 2011), which, among other requirements, instructs agencies to review ''rules that may be outmoded, ineffective, insufficient, or excessively burdensome, and to modify, streamline, expand, or repeal them.'' Thus, in addition to implementing the ACA amendments, the Department proposes revising or ceasing publication of several related rules that are obsolete or unnecessary.

A. Effective Date of Amendments and Retroactive Impact

Throughout the proposed rules, the Department has delineated the claims to which the ACA amendments apply in accordance with the plain language of the ACA's effective-date provision. As noted, ACA Section 1556(c) provides that ''[t]he amendments made by this section shall apply with respect to claims filed under part B or part C of the Black Lung Benefits Act * * * after January 1, 2005, that are pending on or after [March 23, 2010].'' The ACA therefore unambiguously provides that the amendments apply to all claims filed prospectively (*i.e.,* on or after March 23, 2010) because they necessarily meet the effective-date criteria, namely, claims that are filed after January 1, 2005 and are pending on or after March 23, 2010.

Section 1556(c) also explicitly applies the ACA amendments retroactively to a limited group of claims. This group includes any claim filed between January 1, 2005 and March 23, 2010, provided that the claim remained pending on or after March 23, 2010. It is within Congress' authority to determine that legislation be applied retroactively. *Landgraf* v. *USI Film Prod.,* 511 U.S. 244, 266–270 (1994). Because the ACA expressly requires retroactive application of these amendments, the Department is obligated to promulgate implementing regulations that have similar retroactive effect. *See Nat'l Mining Ass'n* v. *Dep't of Labor,* 292 F.3d 849, 859 (DC Cir. 2002) (agency may promulgate regulations having retroactive effect if Congress expressly so authorizes).

Thus, a miner or survivor whose claim falls into either of these two groups may now rely on the statute as amended by the ACA to establish entitlement to benefits. These miners and survivors may use the 15-year

presumption to establish entitlement to benefits, provided that the invocation requirements are met. In addition, survivors whose claims fall into either group may be derivatively entitled to benefits if the miner was totally disabled due to pneumoconiosis as evidenced by a final award of benefits on a BLBA claim filed during the miner's lifetime.

B. Section-by-Section Explanation

20 CFR 718.1 Statutory provisions

Current § 718.1(a) lists, by popular title, the initial statute and the various amendments which comprise the BLBA. The section also describes criteria for establishing miners' and survivors' entitlement to benefits based on the date of claim filing. Finally, current § 718.1(a) sets forth two of the statutory provisions, Sections 402(f) and 413(b) of the Act, 30 U.S.C. 902(f), 923(b), which authorize the Secretary of Labor to establish medical criteria for determining total disability and death due to pneumoconiosis.

The Department proposes to discontinue publication of most of current § 718.1(a) because the information it provides is either contained in other regulations or is no longer relevant to current claims. Current § 718.1(a)'s list of statutory provisions that comprise the Act is also contained in proposed § 725.1(a). Similarly, current § 718.1(a)'s discussion of the conditions necessary for establishing entitlement to benefits duplicates information contained in current §§ 725.202, 725.212, 725.218 and 725.222. Although the Department is proposing to revise §§ 725.212, 725.218 and 725.222, all information related to the requirements for establishing entitlement will appear in those regulations. There is no need to repeat this information in a separate regulation.

Moreover, current § 718.1(a) addresses, in part, criteria applicable only to claims filed prior to June 30, 1982. Few, if any, claims filed prior to that date remain in litigation. Thus, it is no longer necessary to publish the criteria governing these claims, and the Department is proposing to remove it from other regulations (including §§ 725.212, 725.218 and 725.222). Omission of these criteria in future editions of the Code of Federal Regulations will not affect the benefit entitlement of any survivor who filed a claim before June 30, 1982 and is currently receiving benefits. Claimants who were awarded benefits on such claims will continue to receive them. Moreover, if any claim filed before June 30, 1982, results in litigation after the effective date of these regulations, the claim will continue to be governed by applicable criteria as reflected in the 2011 version of the Code of Federal Regulations. *See* discussion under § 718.2.

Other sentences in current § 718.1(a) are unnecessary because they merely provide historical information and are not relevant to the adjudication of any current claim. These sentences state that originally the Secretary of Health, Education and Welfare (now the Secretary of Health and Human Services) had authority to establish standards for miner and survivor eligibility under the Act and that these standards were originally adopted by the Secretary of Labor to adjudicate claims. While these statements are correct, since March 1, 1978, the Secretary of Labor has had independent authority to establish entitlement criteria, 30 U.S.C. 902(f), Public Law 95–239, 2(c), 92 Stat. 95, 1 (1978), and has exercised that authority with respect to all claims filed since March 31, 1980, 20 CFR 718.2 (2011); 45 FR 13677, 13679 (Feb. 29, 1980).

The proposed rule does, however, retain three informational sentences from current § 718.1(a), and re-designates the paragraph as § 718.1. The first sentence explains that Section 402(f) of the Act, 30 U.S.C. 902(f), grants the Secretary of Labor authority to establish criteria for determining total disability or death due to pneumoconiosis for claims filed under Part C of the Act, 30 U.S.C. 931–44; *i.e.,* claims filed after December 31, 1973. The second sentence of proposed § 718.1 explains that Section 402(f) also grants the Secretary of Labor, in consultation with the Director of the National Institute for Occupational Safety and Health, authority to establish criteria for all appropriate medical tests administered in connection with a claim for benefits. The third sentence explains that Section 413(b) of the Act, 30 U.S.C. 923(b), authorizes the Secretary of Labor to establish criteria for x-ray techniques in claims filed under the Act. These statutory provisions are all directly relevant to the rules adopted in Part 718.

Although fully consistent in meaning with current § 718.1(a), the first sentence in proposed § 718.1 reflects some editorial changes made to update the regulation and eliminate information only of historical interest. Thus, a reference to ''partial'' disability in current § 718.1(a) is omitted because it is a reference to the method of survivor entitlement found in § 718.306 of the regulations and 30 U.S.C. 921(c)(5), both of which are relevant only to claims filed before June 30, 1982. *See* discussion under § 718.306. Similarly, language referring to the statutory amendments that gave the Secretary of Labor authority to establish criteria for entitlement is omitted in favor of a simple reference to the current statutory section.

The Department also proposes to discontinue publication of current § 718.1(b). This section addresses claims filed prior to April 1, 1980, and claims reviewed pursuant to Section 435 of the Act, 30 U.S.C. 945 (2000), and directs that all such claims be reviewed under the criteria at part 727 of Title 20 of the Code of Federal Regulations. Section 435 of the Act required the Department to review all Part C claims denied on or before March 1, 1978 or that were pending as of that date. It also required the Department to review certain Part B claims under the Part 727 criteria. Section 435 of the Act was repealed in 2002, however. Black Lung Consolidation of Administrative Responsibility Act, Public Law 107–275, 2(c)(1), 116 Stat. 1925 (2002). Because few, if any, such claims remain, the Department discontinued annual publication of the 20 CFR Part 727 criteria in the Code of Federal Regulations in 2000. *See* 65 FR 79920, 80029 (Dec. 20, 2000); 20 CFR 725.4(d) (2011). Consequently, there is no reason to continue publication of current § 718.1(b).

20 CFR 718.2 Applicability of This Part

Current § 718.2 addresses the applicability of the Part 718 regulations. The first two sentences state that Part 718 applies to claims filed after March 31, 1980, except for the second sentence of § 718.204(a), which applies only to claims filed after January 19, 2001. The third sentence of current § 718.2 states that Part 718 also applies to claims reviewed but not approved under 20 CFR part 727. Finally, the last sentence of current § 718.2 states that the provisions of Part 718 should be construed together in the adjudication of claims.

Proposed § 718.2 changes the effective date in the first sentence from March 31, 1980 to June 30, 1982. This revision reflects the Department's proposal to discontinue publication of § 718.306, which provides a survivor with a presumption of entitlement in certain circumstances, but only if the claim was filed before June 30, 1982. *See* discussion under § 718.306. It further reflects the Department's proposal to cease publication of other statutory presumptions and criteria for

establishing entitlement available only to claims filed before January 1, 1982. *See* discussion under §§ 718.1; 718.205; 718.303; and 718.305. Few, if any, of these claims filed (at the latest) before June 30, 1982 remain in litigation and therefore continued publication of these provisions in the Code of Federal Regulations is unnecessary. Omission of these criteria in future editions of the Code of Federal Regulations will not affect the benefit entitlement of any miner or survivor who filed a claim before June 30, 1982 and is currently receiving benefits. Claimants who were awarded benefits on such claims will continue to receive them. Moreover, if any claim filed before June 30, 1982 results in litigation after the effective date of these regulations, the claim will continue to be governed by the criteria in the 2011 version of the Code of Federal Regulations.

The Department also proposes to discontinue publication of the third sentence of current § 718.2, which states that any claim not approved under the criteria in 20 CFR Part 727 may be reviewed under Part 718. This sentence pertains to claims filed prior to April 1, 1980, and claims reviewed pursuant to Section 435 of the Act. Section 435, which was repealed in 2002, Public Law 107–275, 2(c)(1), 116 Stat. 1925 (2002), required the Department to review all claims pending on March 1, 1978 and all claims previously denied on or before March 1, 1978. It also required the Department to review certain Part B claims under the Part 727 criteria. Because few, if any, such claims remain, the Department discontinued annual publication of the 20 CFR Part 727 criteria in the Code of Federal Regulations in 2000. *See* 65 FR 79920, 80029 (Dec. 20, 2000); 20 CFR 725.4(d) (2011). Consequently, this sentence is obsolete and there is no reason to continue its publication.

For clarity, the Department has divided proposed § 718.2 into three paragraphs. Proposed § 718.2(a) changes the effective date of Part 718 from March 31, 1980 to June 30, 1982, and retains the current exception that the second sentence of § 718.204(a) applies only to claims filed after January 19, 2001. *See* 68 FR 69930, 69933 (Dec. 15, 2003). Proposed § 718.2(a) also contains new language that briefly describes the contents of Part 718. Proposed § 718.2(b) states that the 2011 version of Part 718 would apply to the adjudication of any claim filed prior to June 30, 1982. This paragraph thus fills in the gap left by the change in Part 718's effective date. Finally, proposed § 718.2(c) retains the fourth sentence of current § 718.2 without alteration.

20 CFR 718.3 Scope and Intent of This Part

Section 718.3 generally outlines the issues and statutory provisions the Part 718 criteria address. Current § 718.3(a) includes a reference to partial disability in connection with a claim subject to § 718.306, which implements the Section 411(c)(5) statutory presumption. The proposed rule discontinues publication of § 718.306 because it is obsolete: It applies only to claims filed prior to June 30, 1982. *See* discussion under § 718.306. Thus, proposed § 718.3(a) removes the reference to § 718.306 and partial disability. The rest of the rule remains unchanged.

20 CFR 718.202 Determining the Existence of Pneumoconiosis

Section 718.202 addresses how a claimant may establish the existence of pneumoconiosis. Current § 718.202(a)(3) lists the presumptions that, when invoked, allow the existence of pneumoconiosis to be presumed; the list includes § 718.306. The proposed rule discontinues publication of § 718.306 because it is obsolete: It applies only to claims filed prior to June 30, 1982. *See* discussion under § 718.306. Thus, proposed § 718.202(a)(3) removes the reference to § 718.306. The rest of the rule remains unchanged.

20 CFR 718.205 Death Due to Pneumoconiosis

Section 718.205 sets forth the criteria for establishing that a miner's death was due to pneumoconiosis. The proposed rule revises § 718.205 to clarify that some survivors need not prove the miner died due to pneumoconiosis to be entitled to benefits given the ACA-revived Section 422(l) derivative-entitlement provision; expands the criteria to include the Section 411(c)(4) 15-year presumption of death due to pneumoconiosis for claims governed by the ACA amendments; and eliminates outmoded provisions. Each of these changes is described below.

Current § 718.205(a) provides a general overview of the elements a miner's survivor must prove ''[i]n order to receive benefits:'' (1) the miner had pneumoconiosis; (2) the miner's pneumoconiosis arose out of coal mine employment; and (3) the miner's death was due to pneumoconiosis. For survivor claims that meet ACA Section 1556(c)'s effective-date requirements (*i.e.,* filed after January 1, 2005 and pending on or after March 23, 2010), proving these elements may no longer be required. As previously discussed, the ACA amendments revive Section 422(l) for these claims, which provides for derivative survivor entitlement when the miner was totally disabled due to pneumoconiosis and entitled to receive benefits based on a claim filed during his or her lifetime. In that instance, the survivor does not have to prove that the miner died due to pneumoconiosis to establish his or her own entitlement to benefits. Current § 718.205(a) therefore requires revision. To eliminate any potential misunderstanding, the proposed rule expands the current rule's phrase ''[i]n order to receive benefits'' to read ''[i]n order to receive benefits based on a showing of death due to pneumoconiosis[.]'' This change will ensure that § 718.205 accurately reflects the statute.

The Department proposes to cease publication of current § 718.205(b), which summarizes the criteria for establishing death due to pneumoconiosis in claims filed before 1982. Few, if any, such claims remain in litigation. Thus, it is no longer necessary to publish the criteria governing such entitlement. Omission of these criteria in future editions of the Code of Federal Regulations will not affect the benefit entitlement of any survivor who filed a claim before January 1, 1982 and is currently receiving benefits. Claimants who were awarded benefits on such claims will continue to receive them. Moreover, if any pre-1982 claim results in litigation after the effective date of these regulations, the claim will continue to be governed by applicable criteria as reflected in the 2011 version of the Code of Federal Regulations. *See* discussion under § 718.2.

Current § 718.205(c) describes the criteria for establishing death due to pneumoconiosis in survivors' claims filed on or after January 1, 1982. The proposed rule redesignates this paragraph as § 718.205(b) and makes several revisions to the text. First, the proposed rule eliminates the language restricting the criteria to claims filed on or after January 1, 1982. This distinction is no longer necessary under the rule as proposed because § 718.205 will no longer contain criteria for claims filed before 1982. Moreover, § 718.2, as proposed, already provides that the Part 718 regulations apply to the adjudication of all claims filed on or after June 30, 1982 under Part C of the Act.

Second, proposed § 718.205(b) adds a new subsection (4) to include the Section 411(c)(4) 15-year presumption as an additional method of proving that the miner's death was due to pneumoconiosis for claims governed by the ACA amendments. As previously discussed, the ACA amendments

revived the 15-year presumption for claims meeting the ACA's effective-date requirements. If the survivor proves that the miner had at least 15 years of qualifying coal mine employment and a totally disabling respiratory or pulmonary impairment, the survivor is entitled to a rebuttable presumption that the miner's death was due to pneumoconiosis. Accordingly, proposed § 718.205(b)(4) provides that for a survivor's claim filed after January 1, 2005, and pending on or after March 23, 2010, death will be considered due to pneumoconiosis where the 15-year presumption is invoked and not rebutted. The proposed rule refers to § 718.305, which is the regulation that implements Section 411(c)(4) of the Act. *See* discussion under § 718.305.

Third, proposed § 718.205(b) retains the thrust of current § 718.205(c)(4), which precludes entitlement where death is due to a traumatic injury or unrelated medical condition unless the claimant proves that pneumoconiosis substantially contributed to death; the language is revised to clarify that a survivor may establish the required causal connection by presumption. The proposed rule redesignates the revised paragraph as § 718.205(b)(5). Fourth, proposed § 718.205(b) retains current § 718.205(c)(5) (defining pneumoconiosis as a ''substantially contributing cause'' when it ''hastens the miner's death)'' and redesignates it as § 718.205(b)(6).

Finally, the Department proposes to cease publication of current § 718.205(d). That section provides for expedited consideration of survivors' claims filed on or after January 1, 1982 if the miner was receiving benefits at the time of death. The Department first promulgated it after enactment of the Black Lung Benefits Amendments of 1981, Public Law 97–119, 95 Stat. 1635 (1981), which limited survivors' entitlement based on a miner's award to claims filed before January 1, 1982. As a result, survivors who filed claims on or after January 1, 1982 had to prove that the miner's death was due to pneumoconiosis in order to receive benefits. The Department directed expedited consideration of such survivors' claims to prevent lengthy disruptions in benefit payments between the miner's death and the final adjudication of the survivor's claim. Because the ACA reinstated Section 422(l)'s derivative-entitlement provision for prospective survivors' claims, there is no longer a need to adjudicate the cause of the miner's death in all survivors' cases. Thus, § 718.205(d) is obsolete, and the Department proposes to remove it. Nevertheless, prompt payment of benefits to the survivors of entitled miners remains a goal of the Department. To that end, the Department has proposed revising § 725.418(a) to provide for expedited consideration of survivor claims governed by Section 422(l). *See* discussion under § 725.418.

20 CFR 718.301 Establishing Length of Employment as a Miner

Section 718.301 addresses how, for purposes of applying the statutory presumptions implemented in the regulations, a miner's length of employment should be determined. The first sentence of current § 718.301 lists those presumptions; the list includes §§ 718.303 and 718.306. The proposed rule discontinues publication of both §§ 718.303 and 718.306 because they are obsolete: they apply only to claims filed (at the latest) prior to June 30, 1982. *See* discussion under §§ 718.303 and 718.306. Thus, proposed § 718.301 deletes the references to these two regulations. The rest of the rule remains unchanged.

20 CFR 718.303 Death From a Respirable Disease

The Department proposes to discontinue publication of this provision because it is obsolete. Current § 718.303 implements a statutory presumption applicable only to claims filed prior to January 1, 1982. 30 U.S.C. 921(c)(2). The provision presumed that the miner's death was due to pneumoconiosis if the miner worked for 10 years or more in coal mine employment and died due to a respirable disease. Because the presumption applies only to claims filed approximately 30 or more years ago, it affects few if any claims currently being paid, much less in litigation. Omission of these criteria in future editions of the Code of Federal Regulations will not affect the benefit entitlement of any survivor who filed a claim before January 1, 1982 and is currently receiving benefits. Claimants who were awarded benefits on such claims will continue to receive them. Moreover, if any claim filed before June 30, 1982, results in litigation after the effective date of these regulations, the claim will continue to be governed by applicable criteria as reflected in the 2011 version of the Code of Federal Regulations. *See* discussion under § 718.2.

20 CFR 718.305 Presumption of Pneumoconiosis

Current § 718.305 implements the Section 411(c)(4) 15-year presumption previously described in the background section. As noted there, this statutory section provides a rebuttable presumption of total disability or death due to pneumoconiosis if the miner ''was employed for fifteen years or more in one or more underground coal mines'' or in a coal mine other than an underground mine in conditions ''substantially similar to conditions in an underground mine'' and suffers or suffered from ''a totally disabling respiratory or pulmonary impairment.'' 30 U.S.C. 921(c)(4). As currently written, § 718.305 describes the presumption's requirements using language largely taken verbatim from the statute and offers little additional guidance regarding how the presumption may be invoked or rebutted. Moreover, current § 718.305 contains effective dates that are no longer accurate in light of the ACA amendments. Accordingly, proposed § 718.305 clarifies both the applicability of the presumption and the manner in which it may be invoked and rebutted, and eliminates obsolete provisions.

Applicability

As outlined previously, the rebuttable presumption provided by Section 411(c)(4) of the Act now applies both to claims filed before January 1, 1982 and to claims meeting ACA Section 1556(c)'s effective-date requirements: those claims filed after January 1, 2005, that are pending on or after March 23, 2010, the effective date of the ACA amendments. Current § 718.305(e), however, specifically limits the applicability of the presumption to claims filed prior to January 1, 1982. The Department has deleted § 718.305(e) from the proposed rule because it is no longer accurate. Instead, proposed § 718.305(a) states that the provision is applicable to all claims filed after January 1, 2005, and pending on or after March 23, 2010.

The Department has not included a similar provision for claims filed before January 1, 1982 in the proposed regulation. Current § 718.305, as published in the 2011 edition of the Code of Federal Regulations, will remain as a guide to establishing entitlement pursuant to Section 411(c)(4) of the Act for these claims. Few, if any, such claims remain in litigation, making the continued publication of the current section unnecessary. Thus, the Department proposes to cease publishing a regulation governing the application of the Section 411(c)(4) presumption to claims filed before January 1, 1982. Omission of these criteria in future editions of the Code of Federal Regulations will not affect the benefit entitlement of any individual who filed

a claim before January 1, 1982 and is currently receiving benefits. Claimants who were awarded benefits on such claims will continue to receive them. Moreover, if any pre-1982 claim results in litigation after the effective date of these regulations, the claim will continue to be governed by applicable criteria as reflected in the 2011 version of the Code of Federal Regulations. *See* discussion under § 718.2.

Invocation

Proposed § 718.305(b)(1) sets out the facts a claimant must prove to invoke the presumption: (1) The miner worked for fifteen or more years in one or more underground coal mines or in mines other than underground mines in conditions ''substantially similar to conditions in an underground mine;'' (2) the claimant cannot establish entitlement under § 718.304 of the regulations by establishing the presence of complicated pneumoconiosis by chest x-ray; and (3) the miner has or had a totally disabling respiratory or pulmonary impairment. Proposed § 718.305(b)(1)(iii) also states that the existence of a totally disabling respiratory or pulmonary impairment must be established pursuant to the criteria contained in § 718.204, except that § 718.204(d), which addresses the use of lay evidence, is not applicable. Instead, the permissible use of lay evidence in the 15-year presumption context is outlined in proposed §§ 718.305(b)(3) and (b)(4). Each of these provisions is described in detail below.

Length of Coal Mine Employment. Section 411(c)(4) of the Act provides that the presumption may be invoked if the miner worked for fifteen years in one or more underground coal mines, but also states that the presumption may be invoked if the ''conditions of a miner's employment in a coal mine other than an underground mine was substantially similar to conditions in an underground mine.'' 30 U.S.C. 921(c)(4). Neither the statute nor current § 718.305 state how the required similarity between underground coal-mine employment and non-underground coal mine employment may be demonstrated. This omission has caused litigation.

To fill the gap left by the statute, proposed § 718.305(b)(2) sets forth what a claimant must show to meet the ''substantially similar'' requirement. A claimant must demonstrate that the miner was exposed to coal-mine dust during employment at a non-underground mine. The claimant need not also produce evidence addressing the level of dust exposure in underground coal mines. Instead, it is incumbent upon the fact finder to compare the evidence regarding conditions in the miner's non-underground coal mine employment with those conditions known to exist in underground mines to determine whether substantial similarity has been established. The proposed standard reflects the Director's longstanding interpretation of the ''substantially similar'' language, and one that has been adopted by the Court of Appeals for the Seventh Circuit, the only court that has decided the question. *Director, OWCP* v. *Midland Coal Co.,* 855 F.2d 509, 512 (7th Cir. 1988); *see also Freeman United Coal Mining Co.* v. *Summers,* 272 F.3d 473, 479–80 (7th Cir. 2001); *Blakley* v. *Amax Coal Co.,* 54 F.3d 1313, 1319 (7th Cir. 1995). After issuance of these decisions, the Benefits Review Board similarly held, even in cases arising outside of the Seventh Circuit's jurisdiction, that an administrative law judge should resolve the ''substantially similar'' issue under the standard enunciated in *Midland Coal. See, e.g., Harris* v. *Cannelton Indus., Inc.,* 24 BLR 1–217, 1–223 (2011); *Hansbury* v. *Reading Anthracite Co.,* 2011 WL 6140714, *2, BRB No. 11–236 BLA (Nov. 29, 2011); *Prater* v. *Bevens Branch Res., Inc.,* 2011 WL 4454952, *3, BRB Nos. 10–667 BLA; 10–668 BLA (Aug. 26, 2011). Including this standard in § 718.305 will clarify how the presumption may be invoked.

Chest X-ray Negative for Complicated Pneumoconiosis. The second condition Section 411(c)(4) sets out for invocation is that ''there is a chest roentgenogram submitted in connection with [the] claim * * * and it is interpreted as negative with respect to the requirements of paragraph (3) of this subsection[.]'' 30 U.S.C. 921(c)(4). ''[P]aragraph (3) of this subsection'' refers to Section 411(c)(3) of the Act, which provides an irrebuttable presumption of total disability or death due to pneumoconiosis where there is chest x-ray evidence of ''one or more large opacities[.]'' 30 U.S.C. 921(c)(3). The condition addressed by Section 411(c)(3) is commonly referred to as ''complicated pneumoconiosis.''

Section 411(c)(4)'s reference to a negative chest x-ray in the language quoted above simply means that Section 411(c)(4) may be considered as a means of establishing entitlement if a claimant cannot establish the presence of complicated pneumoconiosis through chest x-ray evidence and, as a result, is unable to invoke the Section 411(c)(3) irrebuttable presumption of entitlement. *See, e.g., Blakley,* 54 F.3d at 1319. Litigation has disclosed some confusion on this point. *See, e.g., U.S. Steel Corp.* v. *Gray,* 588 F.2d 1022, 1025 (5th Cir. 1979) (noting that claimant had to rely on statutory presumption because x-ray evidence was ''negative as to pneumoconiosis''). To prevent such confusion in the future, proposed § 718.305(b)(1)(ii) clarifies that the 15-year presumption is an alternate method for establishing entitlement when a claimant is unable to establish entitlement under § 718.304 (the regulation that implements the Section 411(c)(3) irrebutable presumption) because lacking chest x-ray evidence of complicated pneumoconiosis.

Establishing Total Disability. Current § 718.305(c) provides that the existence of a totally disabling respiratory or pulmonary impairment must be established under the criteria contained in § 718.204. Section 718.204 defines total disability and describes how medical evidence and lay evidence may be used to establish the existence of a totally disabling respiratory or pulmonary impairment. The proposed rule retains this requirement with one exception. Proposed § 718.305(b)(1)(iii) continues to cross-reference § 718.204 as the means to establish a totally disabling respiratory impairment using medical evidence. It specifically excludes, however, § 718.204's provisions governing the use of lay testimony because those provisions are incomplete for purposes of implementing the Section 411(c)(4) presumption. Instead, provisions governing the use of lay testimony are set forth separately in proposed §§ 718.305(b)(3) and (b)(4).

Proposed § 718.305(b)(3) prohibits using a spouse's affidavit or testimony by itself to establish that the miner has a totally disabling respiratory or pulmonary impairment in a living miner's claim. A similar prohibition appears in current § 718.305(a) and in the statutory presumption as well. Thus, the proposed language reflects long established —and statutorily mandated—principles that were used to implement the presumption in claims filed prior to January 1, 1982.

In addition, proposed § 718.305(b)(3) prohibits the use, in a living miner's claim, of a miner's affidavit or testimony by itself to establish a totally disabling respiratory or pulmonary impairment. This language is also in the current regulations defining total disability at § 718.204(d)(5) and is equally relevant to establishing a totally disabling respiratory or pulmonary impairment pursuant to § 718.305.

Current § 718.305(b) addresses the use of lay affidavits to establish the existence of a totally disabling respiratory or pulmonary impairment in both miners' and survivors' claims

involving deceased miners where there is no medical or other relevant evidence. The current rule is no longer accurate because it does not reflect an important restriction on the use of lay evidence Congress added to the Act in 1981 and made applicable to all claims filed on or after January 1, 1982. Public Law 97–119, 202(c), 95 Stat. 1635 (1981). That restriction limits the use of lay testimony in these circumstances to that provided by individuals who would not be eligible to receive benefits in the case. 30 U.S.C. 923(b) (stating that ''[w]here there is no medical or other relevant evidence in the case of a deceased miner, such affidavits [addressing the miner's physical condition], from persons not eligible for benefits in such case * * * shall be considered to be sufficient to establish that the miner was totally disabled due to pneumoconiosis or that his or her death was due to pneumoconiosis.''). Current § 718.305(b) was never amended to reflect this additional restriction because the entire regulation ceased to apply to claims filed on or after January 1, 1982. *See* 20 CFR 718.305(e) (2011).

Further, while § 718.204(d)(3) implements this restriction on lay evidence for miners' claims filed after January 1, 1982, § 718.204(d) contains no corollary provision for survivors' claims. The reason is simple. Prior to the ACA amendments, survivors had to establish that the miner's death was due to pneumoconiosis. There was no need to regulate lay evidence on the total disability and disability causation issues in survivors' claims. The ACA's reinstatement of the 15-year presumption now makes such regulation necessary.

Accordingly, proposed § 718.305(b)(4) adds language implementing the Act's restrictions on the use of lay evidence in deceased miners' claims where there is no medical or other relevant evidence. Proposed § 718.305(b)(4) states that affidavits (or testimony) from individuals who would be entitled to benefits, either as a primary beneficiary or as an individual entitled to augmented benefits, are not sufficient, by themselves, to support a finding of total disability due to a respiratory or pulmonary impairment. This proposed language is in § 718.204(d)(3) and is equally relevant to establishing the existence of a totally disabling respiratory or pulmonary impairment under § 718.305.

The Presumptions Invoked

Current § 718.305(a) provides that once invoked, ''there shall be a rebuttable presumption that such miner is totally disabled due to pneumoconiosis, that such miner's death was due to pneumoconiosis, or that at the time of death such miner was totally disabled by pneumoconiosis.'' These varying presumptions also appear in the statutory language, 30 U.S.C. 921(c)(4). They do not all apply in every claim, however.

Proposed § 718.305(c) clarifies that if the presumption is invoked in a miner's claim, the fact presumed is that the miner is totally disabled due to pneumoconiosis or that he was totally disabled due to pneumoconiosis at the time of death. This later presumed fact would apply when a miner's claim has not been finally adjudicated at the time of his or her death.

If a survivor successfully establishes invocation, he or she is entitled only to a presumption of death due to pneumoconiosis. This result is mandated by the 1981 amendments to the Act. In those amendments, Congress eliminated a survivor's ability to establish entitlement by demonstrating that the miner was totally disabled due to pneumoconiosis at the time of his death. For example, Congress amended the Act's statement of findings and declaration of purpose and deleted language stating that the survivors of miners ''who were totally disabled by [pneumoconiosis] at the time of their deaths'' were entitled to benefits, Public Law 97–119, 203(a)(4), 95 Stat. 1635 (1981).

Similarly, in 1981 Congress added language to Section 411(a) of the Act, which instructs the Secretary to ''make payments of benefits'' to certain classes of claimants. Congress directed the payment of benefits to miners totally disabled due to pneumoconiosis and to survivors on account of death due to pneumoconiosis. The section also states that benefit payments were to be made in cases in which the miner was totally disabled at the time of death only in claims filed before Jan. 1, 1982. 30 U.S.C. 921(a), Public Law 97–119, 203(a)(5), 95 Stat. 1635 (1981). If a survivor was not entitled to derivative benefits because the miner's claim was filed on or after January 1, 1982, that individual had to prove that the miner's death was due to pneumoconiosis in a separate survivor's claim. *See* 20 CFR 718.1(a) (2011). Thus, in the 1981 amendments, Congress eliminated the ability of a survivor to establish entitlement by demonstrating that the miner was totally disabled prior to death. *Mancia,* 130 F.3d at 584 n.6.

The more recent ACA amendments to the Act reversed the 1981 amendments only in part. Congress mandated the award of survivors' benefits if the miner was entitled to benefits on a claim filed during his or her lifetime, *i.e.,* that he was totally disabled due to pneumoconiosis arising out of coal mine employment. Public Law 111–148, 1556(b), (c), 124 Stat. 119 (2010). If the miner was not entitled to benefits, however, a survivor's claim may be awarded only if the miner died due to pneumoconiosis. Thus, proposed § 718.305(c)(2) makes clear that, upon invocation, a survivor is entitled only to a presumption that the miner's death was due to pneumoconiosis.

Rebuttal

Proposed § 718.305(d) outlines the burden of proof on the party opposing entitlement. It sets out the specific methods of rebuttal in a miner's claim and a survivor's claim. The proposed rebuttal standards are modeled on language contained in both the statutory presumption itself and current § 718.305(d). These rebuttal standards were therefore used in the adjudication of claims filed before January 1, 1982. Each is explained in detail below.

In a miner's claim, invocation results in a presumption of total disability due to pneumoconiosis. Section 411(c)(4) itself provides that the presumption may be rebutted by showing that the ''miner does not, or did not, have pneumoconiosis[.]'' Thus, as in the current rule, proposed § 718.305(d)(1)(i) allows the party opposing entitlement to rebut the presumption by showing that the miner does not, or did not, have pneumoconiosis. The proposed rule further clarifies what that proof burden entails by cross-referencing the regulatory definition of pneumoconiosis. The Act recognizes two forms of pneumoconiosis—''clinical'' and ''legal.'' 30 U.S.C. 902(b); *see, e.g., Gunderson* v. *U.S. Sec'y of Labor,* 601 F.3d 1013, 1018 (10th Cir. 2010). Current black lung program regulations expressly define both forms of the disease: (1) clinical pneumoconiosis consists of those diseases recognized by the medical community as pneumoconioses and involves a fibrotic reaction of the lung tissue to dust deposition from coal mine employment; and (2) legal pneumoconiosis includes any chronic lung disease or impairment arising out of coal mine employment. 20 CFR 718.201(a)(1)–(a)(2) (2011). A disease arises out of coal mine employment if it is significantly related to, or substantially aggravated by, dust exposure in coal mine employment. 20 CFR 718.201(b) (2011). Given this definition of pneumoconiosis, the party opposing entitlement must demonstrate that the miner does not suffer from

either clinical or legal pneumoconiosis to rebut the presumption. *See, e.g., Barber* v. *Director, OWCP,* 43 F.3d 899, 901 (4th Cir. 1995) (holding that party opposing entitlement must disprove both forms of the disease to establish rebuttal of Section 411(c)(4) presumption); *Consolidation Coal Co.* v. *Hage,* 908 F.2d 393, 395–96 (8th Cir. 1990) (recognizing that party opposing entitlement must prove that miner's chronic obstructive lung disease was unrelated to coal dust exposure to rebut Section 411(c)(4) presumption by disproving existence of pneumoconiosis); *see also Underhill* v. *Peabody Coal Co.,* 687 F.2d 217, 222–23 and n.10 (7th Cir. 1982) (holding Part 727 interim presumption rebutted by medical opinion establishing that miner did not have clinical pneumoconiosis and that his chronic obstructive lung disease was not related to coal mine employment). To make this requirement clear, proposed § 718.305(d)(1)(i) states that the party opposing entitlement in a miner's claim must prove that the miner does not or did not have pneumoconiosis as defined in § 718.201.

Proposed § 718.305(d)(1)(ii) sets out a second, alternate method to rebut the presumption in a miner's claim. Section 411(c)(4) provides that rebuttal may be established by demonstrating that the miner's totally disabling ''respiratory or pulmonary impairment did not arise out of, or in connection with, employment in a coal mine.'' Proposed § 718.305(d)(1)(ii) implements this provision by stating that the party opposing entitlement must show that the miner's impairment ''did not arise in whole or in part out of dust exposure in the miner's coal mine employment.'' The proposed regulatory rebuttal language is taken directly from current § 718.305(d) and therefore was used in the adjudication of claims filed before January 1, 1982.

Based on the statutory and regulatory language, courts have held that a party opposing entitlement must rule out the miner's coal mine employment as a contributing cause of the totally disabling respiratory or pulmonary impairment in order to rebut the presumption. *Blakely* v. *Amax Coal Co.,* 54 F.3d 1313, 1320 (7th Cir. 1995) (employer must prove coal mine employment did not contribute to disability to rebut § 718.305 presumption); *Bosco* v. *Twin Pines Coal Co.,* 892 F.2d 1473, 1481 (10th Cir. 1989) (Section 411(c)(4) presumption is established by proving miner is totally disabled and rebutted if party opposing entitlement ''affirmatively establishes the lack of * * * a link with [the miner's] coal mine employment''); *Rose* v. *Clinchfield Coal Co.,* 614 F.2d 936, 939 (4th Cir. 1980) (party opposing entitlement must rule out connection between miner's disability and his coal mine employment to rebut Section 411(c)(4) presumption); *Colley & Colley Coal Co.* v. *Breeding,* 59 Fed. Appx. 563, 567 (4th Cir. Mar. 11, 2003) (rebuttal of § 718.305 presumption requires that connection between disability and coal mine employment be ruled out). Thus, in order to rebut the presumption under § 718.305(d)(1)(ii), the party opposing entitlement must prove that there is no connection between the miner's totally disabling respiratory or pulmonary impairment and his or her dust exposure in coal mine employment.

This conclusion is also supported by a line of cases interpreting the rebuttal method available pursuant to 20 CFR 727.203(b)(3) after invocation of the interim presumption of entitlement at 20 CFR 727.203(a) (1999). This presumption was applicable to claims filed before April 1, 1980 and to claims reviewed under Section 435 of the Act. 20 CFR 718.1(b) (2011). The § 727.203(b)(3) rebuttal provision mirrors that of Section 411(c)(4). *See Carozza* v. *U.S. Steel Corp.,* 727 F.2d 74, 78 (3d Cir. 1984) (noting that § 727.203(b)(3) is consistent with Section 411(c)(4)); *Defore* v. *Alabama By-Prod., Corp.,* 12 BLR 1–27, 1–29 (1988) (holding that § 727.203(b)(3) and current § 718.305(d) create identical rebuttal standards). Courts have interpreted § 727.203(b)(3) as requiring the party opposing entitlement to rule out any connection between the miner's disability and his coal mine employment. *See Rosebud Coal Sales* v. *Weigand,* 831 F.2d 926, 928–29 (10th Cir. 1987) (noting six courts of appeals have interpreted § 727.203(b)(3) as requiring that ''any relationship between the disability and coal [mine] employment be ruled out''); *Borgeson* v. *Kaiser Steel Corp.,* 12 BLR 1–169, 1–173 (1989) (adopting rule-out standard under § 727.203(b)(3)). Thus, this presumption, too, could be rebutted by a showing that a miner's coal mine employment did not contribute to his disability. *See Wright* v. *Island Creek Coal Co.,* 824 F.2d 505, 508–09 (6th Cir. 1987) (affirming finding of rebuttal based on evidence that miner's disability was due solely to heart disease). There is no reason to depart from this consistent and longstanding precedent when interpreting the standard for rebuttal under amended Section 411(c)(4). Accordingly, proposed § 718.305(d)(1)(ii) adopts the rule-out standard.

In the survivor's context, a claimant who establishes the invocation criteria receives a presumption that the miner died due to pneumoconiosis. *See* proposed § 718.305(c)(2). Thus, proposed § 718.305(d)(2) provides that, in order to rebut the presumption, the party opposing entitlement must prove either that the miner did not have pneumoconiosis, or that his death did not arise in whole or in part out of dust exposure in the miner's coal mine employment. Once again, these rebuttal methods echo the rebuttal methods applied to claims filed before January 1, 1982. A party may rebut the presumption by demonstrating the absence of pneumoconiosis in the same manner as in a miner's claim. To establish that the miner's death was not due to pneumoconiosis, the party opposing entitlement must establish that the miner's death did not arise in whole or in part out of dust exposure in the miner's coal mine employment. This language imposes the same ''rule out'' standard as is required to rebut the presumption of total disability due to pneumoconiosis. *See Consolidation Coal Co.* v. *Smith,* 837 F.2d 321, 323 (8th Cir. 1988) (interpreting § 727.203(b)(3)). Accordingly, the party opposing entitlement establishes rebuttal by proving that the miner's death was not caused, even in part, by coal mine dust exposure in his coal mine employment. *See Colvin* v. *Director, OWCP,* 838 F.2d 192, 194 (6th Cir. 1988) (affirming finding that § 727.203 presumption of death due to pneumoconiosis rebutted by evidence that miner's death was due solely to lung cancer unrelated to coal mine employment).

Finally, proposed § 718.305(d)(3) retains the language found in current § 718.305(d) stating that ''evidence demonstrating the existence of a totally disabling obstructive respiratory or pulmonary disease of unknown origin'' is insufficient to rebut the presumption. Section § 718.201(a)(2), part of the regulatory definition of pneumoconiosis, makes clear that the term ''pneumoconiosis'' includes obstructive lung diseases significantly related to or substantially aggravated by dust exposure in coal mine employment. Thus, if the presumption is invoked, any obstructive disease from which the miner suffers or suffered is presumed to be due to coal mine dust exposure. A medical opinion stating only that the etiology of the miner's disease is unknown is therefore insufficient to disprove either the existence of pneumoconiosis or a causal connection between a miner's death or disability and his coal-mine-dust exposure. Proposed § 718.305(c)(3)

simply makes this point clear and does not impose any additional rebuttal requirements on the party opposing entitlement. Specifically, it does not require that party to identify the specific cause of a miner's lung disease in order to establish rebuttal; it is sufficient if the party proves, based on credible medical evidence, that the miner's totally disabling respiratory or pulmonary disease is not related to his coal mine employment. *See Tanner* v. *Freeman United Coal Co.,* 10 BLR 1–85, 1–87 (1987) (agreeing with Director that ''the specific etiology of claimant's totally disabling respiratory impairment need not be established by the party opposing entitlement'' under current § 718.305(d)).

20 CFR 718.306 Presumption of Entitlement Applicable to Certain Death Claims

The Department proposes to discontinue publication of this provision because it is obsolete. Current § 718.306 implements a rebuttable statutory presumption of entitlement available to survivors of miners who worked in coal mine employment for 25 years or more prior to June 30, 1971 and died on or before March 1, 1978. 30 U.S.C. 921(c)(5). The presumption applies only to claims filed prior to June 30, 1982 and thus affects few, if any, claims currently in litigation. The Secretary therefore proposes to discontinue publication of this provision. Omission of these criteria in future editions of the Code of Federal Regulations will not affect the benefit entitlement of any survivor who filed a claim before June 30, 1982 and is currently receiving benefits. Claimants who were awarded benefits on such claims will continue to receive them. Moreover, if any claim filed before June 30, 1982, results in litigation after the effective date of these regulations, the claim will continue to be governed by applicable criteria as reflected in the 2011 version of the Code of Federal Regulations. *See* discussion under § 718.2.

Appendix C to Part 718 Blood Gas Tables

Appendix C contains three tables of ''qualifying'' values for arterial-blood gas studies, one of the standard medical tests administered to miners who apply for benefits. A test that produces ''qualifying'' values is deemed, in the absence of contrary evidence, indicative of a totally disabling respiratory or pulmonary impairment. The current version of Appendix C refers to both §§ 718.204 and 718.305 as methods of establishing total disability. That characterization is accurate with regard to § 718.204, which sets forth the methods by which total disability may be established. But it is misleading with regard to § 718.305. Section 718.305 implements the Section 411(c)(4) presumption. To invoke that presumption, the claimant is required to establish that the miner is or was totally disabled due to a respiratory or pulmonary impairment. Section 725.305 does not provide an independent means of establishing disability. Instead, in both its current and revised versions, § 718.305 expressly states that total disability must be established pursuant to § 718.204. *See* discussion under § 718.305. Given that a claimant seeking to invoke the § 718.305 presumption must establish total disability under § 718.204, there is no basis for Appendix C's characterization of § 718.305 as a separate means of establishing total disability. The Department has therefore eliminated those references in the proposed rule. Otherwise, no change has been made to Appendix C.

20 CFR 725.1 Statutory Provisions

Section 725.1 provides an overview of the various statutory enactments that comprise the Black Lung Benefits Act. The proposed rule adds two statutory amendments, clarifies and streamlines the rule's language, and eliminates obsolete or duplicative provisions.

Current § 725.1(a) lists the statutory provisions that have amended the original statute, Subchapter IV of the Federal Coal Mine Health and Safety Act of 1969, Public Law 91–173, 83 Stat. 742 (1969). It also generally describes the criteria for entitlement to both miners' and survivors' benefits. Since this regulation was last revised, the Act has been amended twice. First, in 2002 Congress passed the Black Lung Consolidation of Administrative Responsibility Act (BLCARA), Public Law 107–275, 116 Stat. 1925 (2002). BLCARA transferred responsibility for administering claims under part B of the Act (*i.e.,* claims filed before July 1, 1973) from the Social Security Administration to the Department. Because of the time limitation on filing part B claims, the group of part B beneficiaries is limited and has diminished over time. Thus, Congress determined that it was more efficient to consolidate administrative responsibility for Part B claims with those claims administered by the Department under part C of the Act (*i.e.,* claims filed after December 31, 1973). BLCARA also repealed Sections 404, 414a and 435 of the Act, 30 U.S.C. 904, 924a and 945. Second, in 2010 Congress passed the ACA, which amended the Act as described in the background section above.

Proposed § 725.1(a) adds BLCARA and the ACA to the list of statutes that comprise the Act. The proposed rule also streamlines § 725.1(a) by eliminating language that describes what a miner or survivor must prove to establish entitlement to benefits. That information is available in other provisions in Part 725. Consequently, proposed § 725.1(a) refers the reader to § 725.201, which describes who is entitled to benefits under the Act. Finally, proposed § 725.1(a) substitutes the term ''subchapter IV'' for ''title IV'' in the current provision. This is a technical change made throughout proposed § 725.1 to conform the regulation to the Act's current codification.

Current § 725.1(b) addresses claims administered by the Social Security Administration under part B of the Act—*i.e.,* claims filed before July 1, 1973. Proposed § 725.1(b) revises the current rule to reflect BLCARA's transfer of responsibility for these claims to the Department of Labor. The proposed rule also streamlines § 725.1(b) by eliminating language that describes the time limits for filing part B survivor claims. Given the limited scope of this regulation, there is no reason to include such information here.

Current § 725.1(c) addresses claims filed under Section 415 of the Act, 30 U.S.C. 925. This provision governed the transition period from part B claims (filed before July 1, 1973 and administered by the Social Security Administration) to part C claims (filed after December 31, 1973 and administered by the Department). Section 415 thus applies only to claims filed between July 1, 1973 and December 31, 1973. That transition period is long expired and few, if any, claims governed by Section 415 remain in litigation. Thus, the Department proposes to discontinue publication of current § 725.1(c) because it is obsolete.

Current § 725.1(d) addresses claims filed under part C of the Act (*i.e.,* filed after December 31, 1973), and administered by the Department of Labor. The Department proposes to redesignate this provision as paragraph (c) and edit it for clarity. The third and fourth sentences require revision to better inform the reader of their intended meaning. The third sentence states that part C claims are administered by the Department ''and paid by a coal mine operator'' while the fourth sentence states that the Black Lung Disability Trust Fund will pay benefits in claims where the miner's coal-mine employment ended before

1970, or where an operator liable for the payment of benefits cannot be identified. 20 CFR 725.1(d) (2011); 26 U.S.C. 9501(d)(1)(B). Proposed § 725.1(c) combines and clarifies these statements in a new sentence. Proposed § 725.1(c) also revises the current rule's reference to the ''*Longshoremen's* and Harbor Workers' Compensation Act'' to reflect that statute's current title, the ''*Longshore* and Harbor Workers' Compensation Act.'' The title was changed when Congress amended this statute in 1984. *See* Longshore and Harbor Workers' Compensation Act Amendments of 1984, Public Law 98–426, 27(d)(1), 98 Stat. 1639 (1984).

Current § 725.1(e) addresses former Section 435 of the Act. Section 435 required the Department to review, under the criteria set forth in 20 CFR Part 727, all part C claims that were denied on or before March 1, 1978 or that were pending as of that date. It also required the Department to review under the Part 727 criteria certain part B claims. Section 435 was repealed in 2002 by the BLCARA. Public Law 107–275, 2(c)(1), 116 Stat. 1925 (2002). Few, if any, claims governed by Section 435 remain in litigation. Moreover, the Department discontinued annual publication of the 20 CFR Part 727 criteria in the Code of Federal Regulations in 2000. *See* 65 FR 79920, 80029 (Dec. 20, 2000); 20 CFR 725.4(d) (2011). Thus, the Department proposes to discontinue publication of current § 725.1(e).

Current § 725.1(f) describes changes made by the Black Lung Benefits Reform Act of 1977. The Department proposes to redesignate this provision as § 725.1(d) and make three revisions to promote clarity and eliminate outdated information. First, the opening clause of current § 725.1(f) refers to changes outlined in current §§ 725.1(a)–(e). This statement is no longer accurate given the revisions proposed to those subsections. Thus, the proposed rule eliminates this clause. Second, § 725.1(f)(3) states that the 1977 Reform Act added ''[a] provision which limits the denial of a claim solely on the basis of employment in a coal mine[.]'' While technically accurate, this broad statement could be misleading. It refers to Section 402(f)(1)(B) of the Act, 30 U.S.C. 902(f)(1)(B), which provides that a living miner's continued employment in a mine, or a deceased miner's employment in a mine at time of death, is not conclusive proof that the miner is not or was not totally disabled. Proposed § 725.1(d)(5) replaces the quoted sentence with language that focuses on the relationship between a miner's continued employment and a finding of total disability.

Third, current § 725.1(f)(5) states that the 1977 Reform Act introduced a presumption of entitlement for certain survivors. Section 411(c)(5) of the Act, 30 U.S.C. 921(c)(5), provided a rebuttable statutory presumption of entitlement to survivors of miners who worked in coal mine employment for 25 years or more prior to June 30, 1971 and died on or before March 1, 1978. The Black Lung Benefits Amendments of 1981 later limited application of this presumption to claims filed prior to June 30, 1982. Public Law 97–119, 202(b)(2), 95 Stat. 1635 (1981). Few, if any, claims governed by this presumption remain in litigation. Moreover, the proposed rules discontinue publication of § 718.306, the presumption's implementing regulation. *See* discussion under § 718.306. Thus, the Department proposes to discontinue publication of current § 725.1(f)(5) because it is obsolete.

Current § 725.1(g) addresses the Black Lung Benefits Revenue Act of 1977. The proposed rule redesignates this provision as § 725.1(e) and omits the current rule's references to Sections 415 and 435 of the Act. As previously discussed, Section 415 of the Act applies only to claims filed between July 1, 1973 and December 31, 1973, and the now-repealed Section 435 required review of claims originally filed prior to March 1, 1978. There is therefore no reason to continue to publish references to these provisions in the Code of Federal Regulations.

Current § 725.1(h) addresses changes made by the Black Lung Benefits Amendments of 1981. The Department proposes to redesignate this provision as 725.1(f), edit it for clarity, eliminate outmoded provisions, and update it to reflect the ACA amendments. First, the opening clause of current § 725.1(h) refers to changes outlined in current § 725.1(a). This statement is no longer accurate given the revisions proposed to § 725.1(a). Thus, the proposed rule eliminates this clause.

Second, current § 725.1(h)(2) states that the 1981 Amendments prospectively eliminated a presumption of entitlement for certain survivors. Section 411(c)(2) of the Act, 30 U.S.C. 921(c)(2), provided a rebuttable statutory presumption that the miner's death was due to pneumoconiosis if the miner worked for 10 years or more in coal mine employment and died due to a respirable disease. The 1981 Amendments limited application of this presumption to claims filed prior to January 1, 1982. Public Law 97–119, 202(b)(1), 95 Stat. 1635 (1981). Few, if any, claims governed by this presumption remain in litigation. Moreover, the proposed rules discontinue publication of 20 CFR 718.303, the presumption's implementing regulation. *See* discussion under § 718.303. Thus, the Department proposes to discontinue publication of current § 725.1(h)(2) because it is obsolete.

Third, current §§ 725.1(h)(3) and (h)(5) could be misleading in light of the ACA amendments. Current § 725.1(h)(3) states that the 1981 Amendments limited the applicability of the Section 411(c)(4) 15-year presumption of disability or death due to pneumoconiosis to claims filed before January 1, 1982. Similarly, current § 725.1(h)(5) states that the 1981 Amendments limited survivors' derivative entitlement under Section 422(l), to those cases where the miner was found entitled to benefits on a claim filed prior to January 1, 1982. As discussed above, the ACA amendments revived both of these provisions for claims filed on or after January 1, 2005, that are pending on or after March 23, 2010. Proposed §§ 725.1(f)(2) and (f)(4) clarify this change and provide a cross-reference to § 725.1(i), which, as proposed, discusses the ACA amendments.

Current § 725.1(i) addresses the Black Lung Benefits Revenue Act of 1981. The proposed rule redesignates this provision as § 725.1(g) and omits the current rule's second sentence, which refers to claims paid by the Department pursuant to Section 435 of the Act. As discussed above, Section 435 required the Department to review certain part B and part C claims originally filed prior to March 1, 1978. Few, if any, such claims remain in litigation, and Section 435 was repealed by the BLCARA. Thus, the Department proposes to discontinue publication of this sentence because it is obsolete

Proposed § 725.1(h) is a new paragraph that addresses the changes made by the BLCARA, which transferred administrative responsibility for claims under part B of the Act from the Social Security Administration to the Department of Labor, effective January 31, 2003. BLCARA also repealed Sections 404, 414a and 435 of the Act, 30 U.S.C. 904, 924a and 945. These sections applied only in the case of claims originally filed prior to March 1, 1978. With the transfer of responsibility for part B claims to the Department and with the passage of time, these provisions had all become obsolete. Proposed § 725.1(h) reflects their repeal.

Similarly, proposed § 725.1(i) is a new paragraph that addresses the changes made by the ACA. As summarized in the background section above, the ACA reinstated the Section 411(c)(4) 15-year presumption and the Section 422(l) derivative-survivors'-entitlement provision for claims filed after January 1, 2005, that are pending on or after March 23, 2010. Proposed § 725.1(i) reflects these changes.

Current § 725.1(j) addresses the incorporation into the Act of certain provisions of the Longshore and Harbor Workers' Compensation Act. Proposed § 725.1(j) changes all references to the ''*Longshoremen's* and Harbor Workers' Compensation Act'' to the ''*Longshore* and Harbor Workers' Compensation Act,'' the current title of that statute. For the reasons discussed above, proposed § 725.1(j) omits the current rule's reference to Sections 415 and 435 of the Act. Proposed § 725.1(j) also omits the current rule's reference to the 20 CFR part 727 regulations. Because the Part 727 regulations apply to an increasingly smaller number of claims, they are no longer annually published. *See* 20 CFR 725.4(d) (2011). Consequently, there is no need to continue to publish a reference to them in § 725.1(j). In addition, one grammatical change is proposed to clarify the phrase ''time definite of traumatic injury or death.''

Finally, current § 725.1(k) addresses the incorporation into the Act of certain provisions of the Social Security Act. Other than revising this subsection's reference to the title of the Longshore and Harbor Workers' Compensation Act, the Department does not propose any changes to this subsection.

20 CFR 725.2 Purpose and Applicability of This Part

Section 725.2 addresses the purpose and applicability of the Part 725 regulations. Proposed § 725.2(b) changes the effective date for Part 725 from August 18, 1978 to June 30, 1982. This revision reflects the Department's proposal to discontinue publication of § 718.306, which provides a survivor with a presumption of entitlement in certain circumstances, but only if the survivor filed his or her claim before June 30, 1982. *See* discussion under § 718.306. It further reflects the Department's proposal to cease publication of other statutory presumptions and criteria for establishing entitlement available only to claims filed before January 1, 1982. *See* discussion under § 718.2; *see also* §§ 725.1; 725.201; 725.212; 725.218; 725.222; and 725.309. Few, if any, of these claims filed (at the latest) before June 30, 1982 remain in litigation and therefore continued publication of these provisions in the Code of Federal Regulations is unnecessary. Omission of these criteria in future editions of the Code of Federal Regulations will not affect the benefit entitlement of any miner or survivor who filed a claim before June 30, 1982 and is currently receiving benefits. Claimants who were awarded benefits on such claims will continue to receive them. Moreover, if any claim filed before June 30, 1982 results in litigation after the effective date of these regulations, the claim will continue to be governed by the criteria in the 2011 version of the Code of Federal Regulations. Thus, proposed § 725.2(b) states that the 2011 version of Part 725 would apply to the adjudication of any claim filed prior to June 30, 1982, filling the gap left by the change in Part 725's effective date.

Finally, proposed §§ 725.2(a) and (b) substitute the term ''subchapter IV'' for ''title IV'' in the current provisions. This is a technical change made to conform the regulations to the Act's current codification. The rest of the rule remains unchanged.

20 CFR 725.101(a) Definition and Use of Terms

Section 725.101 defines various terms used in the Part 725 regulations. Current § 725.101(a)(1) defines the term ''the Act'' and current § 725.101(a)(2) defines the terms ''the Longshoremen's Act'' and ''LHWCA.'' These subsections, respectively, address the Black Lung Benefits Act, 30 U.S.C. 901–44, and the Longshore and Harbor Workers' Compensation Act, 33 U.S.C. 901–50.

The Department proposes to streamline the definition of the term ''the Act'' contained in current § 725.101(a)(1). The current definition lists the several statutes that have amended the Act over the years and thus unnecessarily duplicates information contained in § 725.1(a). Proposed § 725.101(a)(1) defines the Act simply by reference to its popular title and statutory citation. Further, current § 725.101(a)(2) refers to the Longshore Act as the ''Longshoremen's and Harbor Workers' Compensation Act.'' Proposed § 725.101(a)(2) changes this reference to the Longshore and Harbor Workers' Compensation Act, the current title of that statute. The rest of the rule remains unchanged.

20 CFR 725.201 Who Is Entitled to Benefits; Contents of This Subpart

Current § 725.201 lists the categories of individuals who are potentially entitled to benefits under the Act and briefly describes the circumstances under which each may be found entitled. It also briefly describes the contents of Part 725. The proposed rule revises current § 725.201 to remove provisions that are either obsolete or are duplicated in other regulations, and to edit it for clarity.

Proposed § 725.201(a) omits the reference in the current rule to Section 415 of the Act. That section governed claims filed from July 1, 1973 through December 31, 1973, the transition period between the end of SSA's administration of the program and the beginning of the Department's. *See* discussion under § 725.1(c). Because Section 415 governs very few remaining claims, and because there is no longer any practical distinction between claims filed under Section 415 and Part C, the proposed rule deletes this reference.

Current §§ 725.201(a)(1), (a)(2) and (a)(4) state that miners, surviving spouses, children, parents and siblings may be entitled to benefits under the Act and identifies some of the conditions necessary for such individuals to establish entitlement. The conditions for establishing entitlement to benefits for each of these categories of claimants are also described in §§ 725.202 (miners), 725.212 (surviving spouses and surviving divorced spouses), 725.218 (surviving children), and 725.222 (surviving parents, brothers and sisters). There is no reason to duplicate this information in a separate regulation. Thus, proposed §§ 725.201(a)(1)–(4) simply lists each of the four categories of claimants and provides a cross-reference to the regulation that describes the conditions of entitlement for that category. For clarity, surviving spouses and surviving children, included in a single paragraph in current § 725.201, are placed in separate provisions in proposed §§ 725.201(a)(2) and (3). Current § 725.201(a)(3), which states that benefits are payable to the child of a miner's surviving spouse under certain circumstances, is retained and redesignated as § 725.201(a)(5). No cross-reference is included because there is no specific regulation that identifies the conditions of entitlement for this category of claimant.

The Department also proposes to discontinue publication of current § 725.201(b), which describes a rebuttable statutory presumption of entitlement to survivors of miners who worked in coal mine employment for 25 years or more prior to June 30, 1971 and died on or before March 1, 1978. 30 U.S.C. 921(c)(5), implemented by 20 CFR 718.306. This change reflects the Department's proposal to discontinue publication of § 718.306 because it is obsolete: It applies only to claims filed

before June 30, 1982. *See* discussion under § 718.306. There is similarly no reason to continue to publish any reference to this presumption. Omission of references to the presumption in future editions of the Code of Federal Regulations will not affect the benefit entitlement of any survivor who filed a claim before June 30, 1982 and is currently receiving benefits. Claimants who were awarded benefits on such claims will continue to receive them. Moreover, if any claim filed before June 30, 1982, results in litigation after the effective date of these regulations, the claim will continue to be governed by applicable criteria as reflected in the 2011 version of the Code of Federal Regulations. *See* discussion under §§ 718.2; 725.2.

Current §§ 725.201(c) and (d) are retained and redesignated as §§ 725.201(b) and (c), respectively.

20 CFR 725.212 Conditions of Entitlement; Surviving Spouse or Surviving Divorced Spouse

Section 725.212 prescribes the conditions required for a surviving spouse or a surviving divorced spouse of a deceased miner to establish entitlement to benefits. The proposed rule revises § 725.212 to omit certain conditions of entitlement applicable only to claims filed prior to June 30, 1982 and to add new conditions of entitlement made applicable to certain claims by the ACA amendments. Other applicable conditions of entitlement remain unchanged.

Current §§ 725.212(a)(3)(i) and (ii) set forth conditions of entitlement for surviving spouses and divorced spouses which relate to the miner and which vary depending on the date of claim filing. These provisions state that the survivor will be entitled to benefits if the miner was either receiving benefits as result of a claim filed prior to January 1, 1982, or is determined as a result of a claim filed prior to January 1, 1982 to have been totally disabled due to pneumoconiosis at the time of death or to have died due to pneumoconiosis. Current § 725.212(a)(3)(ii) also provides that, with one exception, a survivor must establish that the miner's death was due to pneumoconiosis to establish entitlement to benefits if the miner's claim was not filed before January 1, 1982. The exception is for survivors whose claims are filed prior to June 30, 1982. Those survivors may establish entitlement pursuant to Section 411(c)(5) of the Act, which provides a rebuttable presumption of entitlement available to survivors of miners who worked in coal mine employment for 25 years or more prior to June 30, 1971 and died on or before March 1, 1978.

The proposed rule deletes those portions of current §§ 725.212(a)(3)(i) and (ii) that pertain solely to claims filed prior to June 30, 1982. Few, if any, such claims remain in litigation and the Department therefore proposes to discontinue annual publication of these provisions. The criteria in future editions of the Code of Federal Regulations will not affect the benefit entitlement of any survivor who filed a claim before June 30, 1982 and is currently receiving benefits. Claimants who were awarded benefits on such claims will continue to receive them. Moreover, if any claim filed before June 30, 1982, results in litigation after the effective date of these regulations, the claim will continue to be governed by applicable criteria as reflected in the 2011 version of the Code of Federal Regulations. *See* discussion under § 725.2.

Proposed § 725.212(a)(3)(i) retains one condition of entitlement from current § 725.212(a)(3)(ii): it allows a survivor to establish entitlement to benefits by proving that the miner died due to pneumoconiosis. Because the ACA amendments restored Section 422(l)'s derivative-entitlement provision, proving death due to pneumoconiosis is no longer an absolute requirement for all survivors. Thus, proposed § 725.212(a)(3)(ii) sets forth an alternative condition of entitlement to implement the ACA amendment. It states that if the miner filed a lifetime claim that results or resulted in a final benefits award, a survivor whose claim meets ACA Section 1556(c)'s effective-date requirements (*i.e.* filed after January 1, 2005 and pending on or after March 23, 2010) will be entitled to benefits, assuming the survivor meets all other applicable conditions of entitlement. *See West Virginia CWP Fund* v. *Stacy,* ___ F.3d ___, 2011 WL 6062116, *8 (4th Cir. Dec. 7, 2011); *Mathews* v. *Pocahontas Coal Co.,* 24 BLR 1–193, 1–196 (2010). The rest of the rule remains unchanged.

20 CFR 725.218 Conditions of Entitlement; Child

Section 725.218 prescribes the conditions required for a surviving child of a deceased miner to establish entitlement to benefits. Current §§ 725.218(a)(1) and (2) provide certain conditions of entitlement for a surviving child that apply only to claims filed before June 30, 1982. These are identical to the conditions of entitlement applicable to surviving spouses and divorced spouses contained in current §§ 725.212(a)(3)(i) and (a)(3)(ii). For the reasons expressed in the discussion accompanying proposed § 725.212, the proposed rule revises these provisions and adds a new condition of entitlement made applicable by the ACA amendments. Thus, proposed §§ 725.218(a)(1) and (a)(2) state that a surviving child may establish entitlement to benefits if the miner died due to pneumoconiosis or if the miner filed a claim for benefits that is or was awarded and the surviving child filed a claim after January 1, 2005 that was pending on or after the ACA's March 23, 2010 enactment date. The rest of the rule remains unchanged.

20 CFR 725.222 Conditions of Entitlement; Parent, Brother or Sister

Section 725.222 describes the conditions required for a surviving parent, brother or sister of a deceased miner to establish entitlement to benefits. Current §§ 725.222(a)(5)(i) and (a)(5)(ii) provide certain conditions of entitlement for a surviving parent, brother or sister that apply only to claims filed before June 30, 1982. These are identical to the conditions of entitlement applicable to surviving spouses and divorced spouses contained in current §§ 725.212(a)(3)(i) and (a)(3)(ii). For the reasons expressed in the discussion accompanying proposed § 725.212, the proposed rule omits current §§ 725.222(a)(5)(i) and (a)(5)(ii), and adds the same new condition of entitlement as in proposed § 725.212(a)(3)(ii) to implement the ACA amendments. Thus, proposed §§ 725.222(a)(5)(i) and (a)(5)(ii) state that a surviving parent, brother or sister may establish entitlement to benefits if the miner died due to pneumoconiosis or if the miner filed a claim for benefits that is or was awarded and the surviving parent, brother or sister filed a claim after January 1, 2005 that was pending on or after the ACA's March 23, 2010 enactment date. The rest of the rule remains unchanged.

20 CFR 725.309 Additional Claims; Effect of a Prior Denial of Benefits

Section 725.309 addresses both the filing of additional claims for benefits and the effect of a prior denial. The proposed rule omits obsolete information and revises the current rule to implement the ACA amendment to Section 422(l), which restored derivative entitlement for certain survivors.

Current § 725.309(a) states that miners who were found entitled to benefits under part B of the Act may file claims for medical benefits under part C of the Act. The Department proposes to cease the annual publication of this provision

because it no longer applies to newly filed claims. The provision advises claimants who established their entitlement to benefits by filing claims with the Social Security Administration under part B of the Act, *i.e.,* before December 31, 1973, of their right to file a part C claim for medical benefits with the Department of Labor. Congress granted this right to part B beneficiaries in Section 11 of the Black Lung Benefits Reform Act of 1977, Public Law 95–239, 92 Stat. 95 (1978), because unlike part C of the Act, part B did not pay for medical services and supplies necessary to treat totally disabling pneumoconiosis. 33 U.S.C. 907, as incorporated by 30 U.S.C. 932(a). Section 11 directed the Secretary of Health, Education and Welfare to notify each miner receiving benefits under part B of his possible eligibility for medical benefits and to allow a period for filing such claims which ''shall not terminate before six months after such notification is made.'' The Black Lung Benefits Reform Act became law on March 1, 1978. The time period for filing the requisite claims was extended repeatedly, with the most recent extension going to December 31,1980. 45 FR 44264 (July 1, 1980). These extensions were granted because the Department wanted to ensure that no otherwise eligible miner was deprived of the right to seek medical benefits. This filing period has long since passed, however, and there have been no new part B applications since the end of 1973. Thus, there is no longer any need to continue to publish a regulatory provision notifying part B beneficiaries of their right to file a part C claim for medical benefits, and the proposed rule omits this information.

Similarly, the Department proposes to cease the annual publication of current § 725.309(e) because it is obsolete. This provision allows certain claimants to request review under 20 CFR part 727. Because few, if any, claims subject to Part 727 review remain in litigation, the Department discontinued annual publication of the 20 CFR part 727 criteria in the Code of Federal Regulations in 2000. 65 FR 79920, 80029 (Dec. 20, 2000). Thus, there is also no reason to continue annual publication of current § 725.309(e). The proposed rule omits this information.

Section 725.309(d) outlines the requirements for the adjudication of a claim filed by a miner or a survivor after a prior claim has been denied and the one-year period for requesting modification has expired. *See* 20 CFR 725.310 (2010) (implementing modification provision). The proposed rule revises this provision to clarify how the ACA amendment restoring Section 422(l) derivative-survivors' benefits, discussed above, applies when a survivor files a subsequent claim.

Current § 725.309(d) provides that a claimant who files a subsequent claim must demonstrate that a change has occurred in one of the applicable conditions of entitlement since the date upon which the order denying the prior claim became final. Failure to establish such a change will result in the denial of a subsequent claim. The purpose of this provision is to prevent the relitigation of a prior denied claim, thereby implementing the legal doctrine known as *res judicata* or claim preclusion. This doctrine mandates that a denied claim must be considered final and cannot be disturbed in any later proceedings. *See* 65 FR 79920, 79968 (Dec. 20, 2000) (explaining that prior final denials are accepted as correct under § 725.309).

This doctrine's impact is easily seen in the case of a subsequent claim filed by a survivor before the ACA's enactment. If the initial survivor's claim was denied because the surviving spouse failed to prove that the miner's death was due to pneumoconiosis, any subsequent survivor's claim would also be denied because it was impossible to prove with ''new evidence submitted in connection with the subsequent claim'' a change in a condition of entitlement that ''relate[s] to the miner's physical condition,'' *i.e.,* the cause of the miner's death could not change and had been finally adjudicated in the earlier survivor's claim. 20 CFR 725.309(d)(3) (2011).

However, ''claim preclusion bars only an attempt to relitigate a cause of action that was previously resolved; it has no effect on a cause of action which did not exist at the time of the initial adjudication.'' 62 FR 3338, 3352 (Jan. 22, 1997) (*citing Lawlor* v. *Nat'l Screen Serv. Corp.,* 349 U.S. 322, 328 (1955)). By restoring Section 422(l), the ACA created, for certain survivors, a new cause of action by establishing a new method of demonstrating entitlement to benefits. Aside from the filing date and pendency requirements (*i.e.,* a claim filed after January 1, 2005, that was pending on or after March 23, 2010), the ACA imposes no constraints on Section 422(l)'s application. Consequently, the Department has concluded that Section 422(l) applies to all survivors' claims meeting the effective-date requirements. Amended Section 422(l) therefore fundamentally altered the legal landscape for subsequent survivors' claims and requires revision to current § 725.309(d). *See Stacy* v. *Olga Coal Co.,* 24 BLR 1–207, 1–211–12 (2010), *aff'd sub nom West Virginia CWP Fund* v. *Stacy,* _____ F.3d _____, 2011 WL 6062116 (4th Cir. Dec. 7, 2011) (agreeing with Director that amended Section 422(l) creates new method of establishing benefits entitlement).

Amended Section 422(l) requires the survivor to demonstrate only that the miner filed a claim that was awarded because he or she was totally disabled due to pneumoconiosis. Thus, survivors whose subsequent claims meet the requirements of amended Section 422(l) do not have to establish a change in a condition of entitlement that relates to the miner's physical condition. By restoring Section 422(l), Congress has created a new form of survivor entitlement that is not based on whether the miner died due to pneumoconiosis and therefore does not implicate *res judicata* or claim preclusion principles. The proposed rule therefore adds a new paragraph, § 725.309(d)(1), to clarify that a survivor need not establish a change in a condition of entitlement if the subsequent claim meets the requirements for entitlement under amended Section 422(l). But the proposed rule also states that this exception is limited: It applies only if the survivor's prior claim was finally denied prior to March 23, 2010, *i.e.,* before the ACA was enacted. Once a survivor files a claim subject to the ACA and that claim is denied, any subsequent claim the survivor files is subject to the usual rules of claim preclusion set forth in proposed § 725.309(c) because the subsequent claim asserts the same cause of action as the prior denied claim. The remaining paragraphs included within current § 725.309(d) are redesignated as §§ 725.309(d)(2)–(d)(6), respectively.

Although amended Section 422(l) applies to subsequent survivor claims, nothing in the ACA authorizes re-opening of survivors' claims that have already been denied and for which all rights to appeal or reconsideration have terminated. Consequently, in the case of a subsequent claim governed by amended Section 422(l), the prior denial remains in effect. Current § 725.309(d)(5), which prohibits the payment of benefits ''for any period prior to the date upon which the order denying the prior claim became final,'' is not altered and applies in the case of subsequent survivors' claims awarded under amended Section 422(l).

The remainder of current § 725.309(d), as well as current §§ 725.309(b), (c), and (f), have been retained in the proposed rule and redesignated as §§ 725.309(a) through (d).

20 CFR 725.418 Proposed Decision and Order

Section 725.418 governs issuance of proposed decisions and orders by the district director, the Department of Labor official who is the first level adjudicator for all black lung claims. To ensure that survivors entitled to derivative benefits under ACA-amended Section 422(l) begin to receive benefits as soon as possible after filing a claim, the proposed rule adds a new subsection, § 725.418(a)(3), that provides an expedited procedure for issuance of proposed decisions and orders when Section 422(l) applies. The proposed rule also ensures that coal mine operators will be afforded a meaningful opportunity to challenge their liability for benefits in such claims.

Under the regulatory scheme in effect since 2001, a proposed decision and order constitutes the district director's only determination of the claimant's entitlement to benefits. *See* 65 FR 79920, 79997 (Dec. 20, 2000). Thus, a survivor-claimant cannot begin to receive benefits until after a proposed decision and order awarding benefits is issued in the survivor's claim. For survivors entitled to derivative benefits under Section 422(l), this causes a disruption in benefit payments because the miner's benefits cease the month before the month in which the miner dies. 20 CFR 725.203(b)(1) (2011).

In the normal course, the district director issues a proposed decision and order after the responsible coal mine operator has been notified of its potential liability for a benefits claim and after the parties have had the opportunity to develop medical evidence and evidence addressing the operator's liability. *See* 20 CFR 725.407; 725.408; 725.410 (2011). These procedural steps take time to complete. For example, the regulations provide an operator notified of a claim 90 days in which to submit evidence regarding its liability. 20 CFR 725.408(b)(1) (2011). After that period, each party is given 60 days for evidentiary development, and an additional 30 days to submit evidence in response to the other party's evidence. 20 CFR 725.410(b) (2011). These time periods can be, and often are, enlarged at a party's request. 20 CFR 725.423 (2011).

Although necessary in general, these standard adjudication procedures frustrate the Department's goal of prompt payment of Section 422(l) claims. The procedures are also unnecessary for such claims. Because the miner's physical condition will not be at issue, no medical evidence need be developed. Nor is there any compelling need to notify the operator of its potential liability or allow it to develop liability evidence before the proposed decision and order is issued. The operator will have received notification of its liability in the miner's claim, and provided a chance to challenge its liability under the same criteria applicable in the survivor's claim. *See generally* 20 CFR 725.408–725.419; 725.494 (2011). It would also have had the right to a formal hearing before an administrative law judge and appellate review of the judge's decision. 20 CFR 725.450; 725.481–725.482 (2011). Similar procedures would have been available to the operator under the regulatory scheme in effect prior to 2001. *See* 20 CFR 725.412–725.415; 725.450; 725.481–725.482 (2000). There is simply no need to delay issuance of the proposed decision and order in a claim governed by amended Section 422(l).

At the same time, an operator may, in rare instances, have a legitimate reason for challenging its liability in a Section 422(l) claim. Proposed § 725.418(a)(3) allows an operator to do so by filing a request for revision under the procedures set forth in current §§ 725.419(a) and (b) within 30 days after the proposed decision and order is issued. In such cases, the district director will vacate the proposed decision and order and allow all parties, including the claimant and the Director, 30 days to submit evidence pertaining to the operator's liability. This may include evidence pertaining to the named operator's status as a potentially liable operator or evidence demonstrating that another coal mine operator is liable for the claim. *See* 20 CFR 725.494; 725.495 (2011). The period may also be extended for good cause. *See* 20 CFR 725.423 (2011). At the end of the 30-day (or extended) period, the district director will evaluate any liability evidence submitted and enter a new proposed decision and order adjudicating the liability question and awarding the survivor benefits, as appropriate.

This procedure balances the Department's goal of reducing the time that elapses between when an entitled-miner's benefits cease and when a Section 422(l) survivor's benefits begin with the need to protect coal mine operators' due process rights. The 30-day period for submitting liability evidence allows the operator sufficient time to defend its interests, given that the operator will have had the opportunity to address the liability issue in the miner's claim. At the same time, this relatively brief period limits the potential delay in benefit payments to the survivor resulting from the operator's liability challenge.

The Department notes that current § 725.418(a)(2) allows the district director to by-pass the normal adjudication process and issue a proposed decision and order at any time if the ''district director determines that its issuance will expedite the adjudication of the claim.'' 20 CFR 725.418(a)(2) (2011). Based on this provision, after enactment of the ACA, the Department began issuing proposed decisions and orders upon receipt of a survivor's claim governed by amended Section 422(l). Although the general regulatory exception provides sufficient authority for this policy, revising § 725.418 to include an explicit exception to the normal district director adjudication procedures for derivative-entitlement claims, and to set forth defined procedures through which an operator may challenge its liability, gives the public notice as to how the Department will handle these recurrent claims. Accordingly, proposed § 725.418(a)(3) states that a district director may issue a proposed decision and order upon receipt of a claim filed by a survivor who is entitled to benefits under amended Section 422(l). Proposed paragraph (a)(3) also describes the procedures for an operator to challenge its liability in such cases.

Current § 725.418(d) states that a district director cannot identify an operator as responsible for the claim in the proposed decision and order without first providing the operator notice of the claim and the opportunity to submit evidence challenging the claimant's entitlement and its liability. Based on the exception created by current § 725.418(a)(2), the Director has not applied this paragraph in claims awarded under amended Section 422(l). Proposed § 725.418(d) clarifies that this requirement does not apply in the case of a claim awarded under amended Section 422(l). The rest of the rule remains unchanged.

III. Statutory Authority

Section 426(a) of the BLBA, 30 U.S.C. 936(a), authorizes the Secretary of Labor to prescribe rules and regulations necessary for the administration and enforcement of the Act.

IV. Information Collection Requirements (Subject to the Paperwork Reduction Act) Imposed Under the Proposed Rule

This rulemaking imposes no new collections of information.

V. Executive Orders 12866 and 13563 (Regulatory Planning and Review)

Executive Orders 12866 and 13563 direct agencies to assess all costs and benefits of available regulatory alternatives and, if regulation is necessary, to select regulatory approaches that maximize net benefits (including potential economic, environmental, public health and safety effects, distributive impacts, and equity). E.O. 13563 emphasizes the importance of quantifying both costs and benefits, of reducing costs, of harmonizing rules, and of promoting flexibility. It also instructs agencies to review ''rules that may be outmoded, ineffective, insufficient, or excessively burdensome, and to modify, streamline, expand, or repeal them.'' In accordance with this Executive Order, the Department has proposed certain changes to these rules not otherwise required to implement the ACA's statutory amendments.

The proposed rules are consistent with the statutory mandate, reflecting the policy choices made by Congress in adopting the ACA amendments. Those choices reflect Congress' rational decision ''to spread the costs of the employees' disabilities to those who have profited from the fruits of their labor—the operators and the coal consumers.'' *West Virginia CWP Fund* v. *Stacy,* _____ F.3d _____, 2011 WL 6062116, *3 (4th Cir. Dec. 7, 2011) (*quoting Usery,* 428 U.S. at 18)). In restoring Section 411(c)(4), ''Congress decided to ease the path to recovery for claimants who could prove at least 15 years of coal mine employment and a totally disabling pulmonary impairment,'' thus giving miners and their survivors ''a better shot at obtaining benefits.'' *Keene* v. *Consolidation Coal Co.,* 645 F.3d 844, 849 (7th Cir. 2011). And in restoring Section 422(l), Congress made ''a legislative choice to compensate a miner's dependents for the suffering they endured due to the miner's pneumoconiosis or as a means to provide a miner with peace of mind that his dependents will continue to receive benefits after his death.'' *B & G Constr. Co.* v. *Director, OWCP [Campbell],* 662 F.3d 233, 258 (3d Cir. 2011). The proposed rules merely implement these Congressional directives.

Although additional expenditures associated with these rules primarily flow from the statutory amendments rather than the rules themselves, the Department has evaluated the financial impact of the amendments' application on coal mine operators. Coal mine operators' outlays for the workers' compensation insurance necessary to secure the payment of any benefits resulting from the amendments will likely increase, at least in the short run. Self-insured operators may also be required to pay out more in compensation to entitled miners and survivors.

These operator expenditures are transfer payments as defined by OMB Circular A–4 (*i.e.,* payments from one group to another that do not affect the total resources available to society). To estimate additional workers' compensation insurance premiums that may result from the ACA amendments, the Department projected new claim filings, award rates and associated insurance premiums both with and without the amendments for the ten-year period 2010 through 2019. Based on the projected differences, the Department estimates that annualized industry insurance premiums will increase $35 million over this ten-year period as a result of the ACA amendments. This figure likely overstates the premium increase because it is based on two important assumptions designed to consider a maximum-impact scenario: the estimates assume that all coal mine operators purchase commercial workers' compensation insurance rather than self-insuring, and the insurance rates used are based on the higher rates charged by assigned-risk plans rather than the lower rates generally available in the voluntary market. The Department's estimate is explained more fully in the Regulatory Flexibility Act discussion below.

Transfers also occur between insurance carriers or self-insured coal mine operators and benefit recipients. These transfers take the form of benefit payments. The amount of benefits payable on any given award depends upon a variety of factors, including the benefit recipient's identity, the length of the recipient's life, and whether the recipient has any eligible dependents for whom the basic benefit amount may be augmented. *See generally* 20 CFR 725.202–725.228; 725.520 (2011).

For example, in FY 2010, the Department oversaw 28,671 active Part C BLBA claims with income and medical benefit disbursements of approximately $238 million. This translates into an annual benefit rate of $8,316 per claim, or an average monthly benefit of $693. Of the total active claims in 2010 payable by coal mine operators and their insurance carriers, an estimated 156 were new awards resulting from the ACA amendments, translating into approximately $1.3 million in additional income and medical benefit disbursements in the first year. Accordingly, the Department's predicted 425 new awards in responsible operator claims for 2011 equates to an estimated $3.5 million increase in benefit disbursements for the first year.

Payments from the Black Lung Disability Trust Fund will also increase due to a small number of claims awarded under the ACA amendments and for which no coal mine operator may be held liable. The Department estimates that Trust Fund benefit payments will increase a total of approximately $48.3 million over the 10-year period from 2010–2019. Despite this amendment-related increase, Trust Fund benefit payments as a whole are decreasing annually. The majority of the Trust Fund's liabilities stem from earlier days of the black lung program, when the Trust Fund bore liability for a much higher percentage of awarded claims. Trust Fund payments cease when these benefit recipients pass away. As a result, the Trust Fund's expenditures continue to decrease each year.

Claimants who obtain benefits under the ACA amendments will gain a variety of advantages that are difficult to quantify in monetary terms. A disabled miner ''has suffered in at least two ways: His health is impaired, and he has been rendered unable to perform the kind of work to which he has adapted himself.'' *Usery,* 428 U.S. at 21. Income disbursements give these miners some financial relief and provide a modicum of compensation for the health impairment the miners suffered in working to meet the Nation's energy needs. Medical treatment benefits provide health care to miners for the injury caused by their occupationally acquired pulmonary diseases and disabilities so as to maximize both their longevity and quality of life. Both income and medical benefits alleviate drains on public assistance resources. And miners awarded benefits under the ACA amendments may also rest assured that their dependent survivors will not be left wholly without financial support.

In exchange, coal mine operators continue to be protected from common law tort actions that could otherwise be brought by these miners or their survivors for pneumoconiosis arising from the miner's employment and related disabilities or death. *See* 33 U.S.C. 905(a), incorporated by 30 U.S.C. 932(a). And because the monthly benefit amounts payable are fixed by statute, compensation costs are predictable and feasible for insurers to cover at an affordable rate. This predictability also allows coal mine operators to pass their

costs for insurance (or benefits if self-insured) on to consumers.

From a program-administration viewpoint, the Department will realize some cost savings from the ACA amendment restoring Section 422(l)'s automatic entitlement for survivors. Before the amendment, the Department had to develop each survivor's claim, including obtaining relevant medical evidence, evaluating that evidence, and issuing a detailed decision adjudicating whether the miner's death was due to pneumoconiosis. That administrative work, and the costs associated with it, is no longer necessary where the survivor is entitled under Section 422(l). Instead, the regulations adopt a streamlined process for those cases that eliminates most evidentiary development and evaluation. This process has the dual benefit of delivering compensation to entitled survivors more quickly and reducing the costs associated with that delivery.

The Office of Information and Regulatory Affairs of the Office of Management and Budget has determined that the Department's rule represents a ''significant regulatory action'' under Section 3(f)(4) of Executive Order 12866 and has reviewed the rule.

VI. Small Business Regulatory Enforcement Fairness Act of 1996

As required by Congress under the Small Business Regulatory Enforcement Fairness Act of 1996, enacted as Title II of Public Law 104–121, 201–253, 110 Stat. 847, 857 (1996), the Department will report promulgation of this rule to both Houses of the Congress and to the Comptroller General prior to its effective date as a final rule. The report will state that the rule is not a ''major rule'' as defined under 5 U.S.C. 804(2).

VII. Unfunded Mandates Reform Act of 1995

Title II of the Unfunded Mandates Reform Act of 1995, 2 U.S.C. 1531 *et seq.,* directs agencies to assess the effects of Federal Regulatory Actions on State, local, and tribal governments, and the private sector, ''other than to the extent that such regulations incorporate requirements specifically set forth in law.'' 2 U.S.C. 1531. For purposes of the Unfunded Mandates Reform Act, this rule does not include any Federal mandate that may result in increased expenditures by State, local, tribal governments, or increased expenditures by the private sector of more than $100,000,000.

VIII. Regulatory Flexibility Act and Executive Order 13272 (Proper Consideration of Small Entities in Agency Rulemaking)

The Regulatory Flexibility Act of 1980, as amended, 5 U.S.C. 601 *et seq.,* (RFA), requires an agency to prepare a regulatory flexibility analysis when it proposes regulations that will have ''a significant economic impact on a substantial number of small entities,'' or to certify that the proposed regulations will have no such impact, and to make the analysis or certification available for public comment. 5 U.S.C. 605. As noted above, the Department believes that the BLBA itself accounts for most, if not all, of the costs imposed on the coal mining industry and that the proposed rules do not add to those costs.

The primary cost lies in purchasing commercial workers' compensation insurance or qualifying as a self-insurer to insure workers covered by the BLBA. This requirement is imposed by statute. 30 U.S.C. 933. The Department estimates that the cost of purchasing commercial insurance will increase initially because the BLBA amendments will result in additional awards but will then drop. The Department has conducted an initial regulatory flexibility analysis. A summary of that analysis is set forth below. The complete economic analysis is available for viewing and download at *www.Regulations.gov* or upon written request directed to the Division of Coal Mine Workers' Compensation Programs, Office of Workers' Compensation, U.S. Department of Labor, Room C–3520, 200 Constitution Avenue NW., Washington, DC 20210.

To estimate the maximum financial impact that the amendments and the proposed rule may have on coal mine operators, the Department based its economic analysis on two important assumptions. First, in estimating increases in workers' compensation insurance premiums, the Department used rates charged by more expensive assigned risk plans, where available, rather than standard commercial insurance. These plans reflect rates for mine operators who are unable to secure coverage in the voluntary market and must use this insurer of last resort. Second, although approximately 38% of all coal mine operators are self-insured and will likely have lower costs of complying with the ACA amendments, the Department assumed that all operators purchased commercial insurance. As a result of these assumptions, the Department's estimates likely overstate the actual cost impact of the ACA amendments and the proposed rule.

A. Description of Reasons That Action by the Agency Is Being Considered

The Department is proposing these rules to implement the ACA amendments to Sections 422(l) and 411(c)(4) of the BLBA. The amendment to Section 422(l) allows certain eligible survivors to establish entitlement to benefits based on the fact that the miner had been awarded benefits and without having to prove that the miner died due to coal workers' pneumoconiosis. The amendment to Section 411(c)(4) re-establishes a rebuttable presumption of total disability or death due to pneumoconiosis for certain claims.

B. Objectives of, and Legal Basis for, the Proposed Rule

Section 426(a) of the BLBA authorizes the Secretary to ''issue such regulations as [she] deems appropriate to carry out the provisions of this title.'' 30 U.S.C. 936(a). The ACA amendments are self-effectuating, and the Department has applied the amended statutory provisions in claims arising under the BLBA since their enactment. Although the amendments are legally binding by themselves, the Department believes it appropriate to incorporate those amendments into the existing regulatory scheme to clarify to all parties the manner in which the Department believes the amendments should be applied. Consequently, the proposed rule has two primary goals. First, it will set forth the requirements for derivative entitlement for the survivors of miners who had been awarded benefits on claims filed during their lifetimes. Second, the rule will spell out the requirements for invocation and rebuttal of the statutory presumption of total disability or death due to pneumoconiosis.

C. Small Entities to Which the Proposed Rule Will Apply

The RFA requires an administrative agency to describe, and where feasible, estimate the number of small entities to which a proposed rule will apply. 5 U.S.C. 603(b)(3). Small entities include small businesses, small organizations, and small governmental jurisdictions. 5 U.S.C. 601(6). The BLBA does not apply to or regulate small organizations or governmental jurisdictions. Accordingly, this analysis is limited to the effect of the proposed rule on small businesses. By its terms, the BLBA imposes obligations on coal mine operators, who are liable for and must secure the payment of benefits to their eligible employees, former employees,

and qualified survivors. 30 U.S.C. 932(b) (''each such operator shall be liable for and shall secure the payment of benefits''). An operator is defined as ''[a]ny owner, lessee, or other person who operates, controls or supervises a coal mine, or any independent contractor performing services or construction at such mine.'' 20 CFR 725.491(a)(1) (2011); *see* 30 U.S.C. 802(d).

Federal statistical agencies employ the North American Industry Classification System (NAICS) in classifying business establishments for the purpose of collecting, analyzing, and publishing statistical data related to the U.S. business economy. NAICS is also the standard used to classify small businesses for the RFA. *See* 5 U.S.C. 601(3); 15 U.S.C. 632(a). NAICS was developed under the auspices of the Office of Management and Budget, and adopted in 1997 to replace the Standard Industrial Classification (SIC) system. The NAICS designated sector covering entities regulated by the BLBA is NAICS 2121 Coal Mining. Three detailed industries comprise this sector: NAICS 212111 Bituminous Coal and Lignite Surface Mining; NAICS 212112 Bituminous Coal Underground Mining; and NAICS 212113 Anthracite Mining.

The Small Business Administration (SBA) defines establishment size standards to determine whether a business entity, including all of its affiliates, is ''small'' and, thus, eligible for government programs and preferences reserved for ''small business concerns.'' In addition, the RFA requires agencies to consider the impact of their regulatory proposals on small entities. A size standard is usually stated in number of employees for manufacturing industries and average annual receipts for most non-manufacturing industries. The SBA size standard for the three sectors within the coal mining industry (NAICS 2121) is up to and including 500 employees. *See* U.S. Small Business Administration, Table of Small Business Size Standards, Effective November 5, 2010. *http://www.sba.gov/content/table-small-business-size-standards.*

Virtually all coal mine operators in the United States fall within SBA's definition of a small business. Based on data supplied by the Mine Safety and Health Administration for 2008, there are 2,109 individual establishments in the coal mining industry. Of these, 2,094 employed 500 or fewer people. Each individual mining sector is also predominately comprised of small businesses under SBA's definition. Only 4 of the 1,307 surface bituminous mining establishments and 11 of 645 underground bituminous mining establishments employed more than 500 individuals. Finally, each of the 157 anthracite mining establishments employed 500 or fewer individuals. These results hold true even when individual companies are aggregated into parent companies. Grouping related companies together, the Department found that only 31 of the 1,108 companies employed more than 500 people in 2008. Therefore, even when related mining companies are considered as a single, larger entity, 97.2 percent (1,077 of 1,108) of companies in the coal mining industry employed 500 or fewer people and meet the SBA's definition of a small business.

D. Projected Reporting, Recordkeeping and Other Compliance Requirements of the Proposed Rules, Including an Estimate of the Classes of Small Entities That Will Be Subject to the Requirement and the Type of Professional Skills Necessary for Preparation of the Report or Record

The proposed rules do not directly impose any reporting or recordkeeping requirements on any entities, regardless of size. Nor do the rules impose other significant costs beyond those imposed by the BLBA itself. The statute requires coal mine operators to secure the payment of benefits by either purchasing commercial workers' compensation insurance or qualifying as a Department-approved self-insurer. 30 U.S.C. 933. But because the ACA amendments may make it easier for certain miners and survivors to secure entitlement to benefits, the Department believes there will be a short-term increase in black lung insurance rates.

In particular, the Department anticipates that the rule interpreting amended Section 422(l) will result in a significant increase in the number of survivors entitled to benefits. This increased eligibility, however, simply reflects the clear intent of Congress, which was to benefit a broad set of current and future claimants. As the late Senator Robert C. Byrd, sponsor of Section 1556 explained, amended Sections 411(c)(4) and 422(l) were not meant to benefit only future claimants making initial claims, but also (1) claimants who have had claims denied and will be filing subsequent claims; (2) claimants awaiting or appealing a decision or order; and (3) claimants in the midst of trying to determine whether to seek a modification of a recent order. *See* 156 Cong. Rec. S2083–84 (daily ed. Mar. 25, 2010) (statement of Sen. Byrd).

Any increase in awards attributable to the ACA amendments will be reflected in increased workers' compensation insurance premiums. As previously stated, the Department has estimated these increases using more costly assigned risk rates to project the worst-case scenario. In 2009, prior to the ACA's enactment, the average assigned risk rate for surface bituminous mines was $1.38 per $100 of payroll. The rate for underground bituminous mines was $3.36 per $100 of payroll. The rate for underground anthracite mines was $20.95 per $100 of payroll. Given the downward trend in claim filings, which would result in fewer new claim awards, coupled with a decline in survivors automatically entitled to benefits based on miners' claims filed prior to 1982, the Department believes that these rates would have steadily decreased over the ten-year period from 2010 to 2019 absent the ACA amendments. The Department projects that the average assigned risk rates in 2019 would have been $.86 per $100 of payroll for surface bituminous mines, $2.10 per $100 of payroll for underground bituminous mines, and $13.10 per $100 of payroll for underground anthracite mines.

The Department projects, however, that the total cost to the coal mining industry for complying with the Act's insurance requirements will increase due to the ACA amendments. These costs are expected to peak during the first two years after the ACA's enactment because the new law will spur new claim filings, which will result in more new claim awards, and affords automatic entitlement to an additional group of survivors. The Department projects that the average assigned risk rates in 2011, the peak expense year, will be $2.21 per $100 of payroll for surface bituminous mines, $5.39 per $100 of payroll for underground bituminous mines, and $33.60 per $100 of payroll for underground anthracite mines. After this temporary increase, total approvals against responsible operators are expected to decline, causing a corresponding decline in premium costs. By 2019, the Department projects that the average assigned risk rates will be $1.07 per $100 of payroll for surface bituminous mines, $2.61 per $100 of payroll for underground bituminous mines, and $16.28 per $100 of payroll for underground anthracite mines.

Based on the difference in the Department's baseline assessment of compliance costs absent the ACA amendments and the expected cost to the coal mining industry for complying with the ACA amendments and implementing regulations, the Department estimates that insurance premium will rise by an annualized cost of $35 million between 2010 and 2019.

The annualized insurance cost increases for each disaggregated coal mining industry for this ten-year period are expected to be $8.5 million for the bituminous surface mining sector, $23.6 million for the bituminous underground mining sector, and $3 million for the anthracite mining sector.

As noted, the Department expects these cost impacts to be transitory in nature. Historically, the program has experienced a spike in claim filings, and thus new awards, immediately following enactment of statutory amendments or implementation of new program regulations. After these transitory impacts have subsided, the annual cost to the coal mining industry is expected to decrease each year and continue to follow the downward trend in claim filings that existed prior to the ACA amendments. The Department estimates that by 2019, the industry cost for all claims (including those that would have been awarded even without the amendments) will be $91.6 million, more than $26 million lower than the 2009 cost of $117.9 million. The Department emphasizes that these projected costs are likely overstated because they assume that all coal mine operators purchase commercial workers' compensation insurance, which is more costly than self-insuring.

Thus, the Department anticipates that the ACA amendments will carry an annualized cost to the industry of $35 million over the ten years from 2010 to 2019 with expenses peaking in 2011. Significantly, because this will occur prior to promulgation of any final regulations implementing the ACA amendments, the increased cost can be attributed solely to the amendments. For the industry in the aggregate, $35 million represents 0.10 percent of annual industry revenues. The additional regulatory costs for the bituminous surface and underground coal mine sectors are expected to represent approximately 0.05 and 0.13 percent of total revenues, respectively. However, given that bituminous coal mining productivity and therefore, production is heavily skewed toward larger establishments, establishments that employ 49 or fewer employees are expected to have the greatest costs relative to revenues. For example, the costs to pay the projected increased insurance rates represent 0.27 and 0.36 percent of revenue respectively for bituminous surface and underground coal mines that employ fewer than 20 workers—substantially greater than the industry averages and their larger firm counterparts. The additional cost for the anthracite industry represents 2.85 percent of total revenues. This relatively large increase results from the relatively high labor intensity and high existing insurance premiums for anthracite coal mining. It is thus a function of the industry rather than the amendments or the proposed regulations. Establishments within this sector that employ under 20 workers are expected to have the greatest costs relative to revenues given their relatively lower productivity rate.

Identification of Relevant Federal Rules That May Duplicate, Overlap or Conflict With the Proposed Rule

The Department is unaware of any rule that may duplicate, overlap or conflict with the proposed rule.

E. Description of Any Significant Alternatives to the Proposed Rule That Accomplish the Stated Objectives of Applicable Statutes and That Minimize Any Significant Economic Impact of the Proposed Rule on Small Entities

The RFA requires the Department to consider alternatives to the rule that would minimize any significant economic impact on small businesses without sacrificing the stated objectives of the rule. Several factors make proposing alternatives to the rule exceptionally difficult. First, these rules implement entitlement criteria that Congress has expressly determined be applied to certain claims filed under the BLBA. The Department is not free to disregard the clearly expressed intent of Congress. *Chevron USA Inc.,* v. *Natural Res. Def. Counsel, Inc.,* 467 U.S. 837, 842–43 (1984) (''agency [] must give effect to the unambiguously expressed intent of Congress''). Second, the requirement that the amendments apply to claims filed under the BLBA must mean that Congress intended the amendments to be applied in the context of existing claim procedures as specified in the Department's regulations. Congress is presumed to know the law when it legislates. *Miles* v. *Apex Marine Corp.,* 498 U.S. 19, 32 (1990). In the black lung benefits program, the existing regulations explicitly prescribe the circumstances under which a coal mine operator would be liable for a particular claim and how the Department is required to identify the particular operator liable for each claim. This regulatory liability scheme was designed in accordance with the stated objective of Congress, which was ''to ensure that individual coal mine operators rather than the [Black Lung Disability Trust Fund] bear the liability for claims arising out of such operator's mines, to the maximum extent feasible.'' S. Rep. No. 95–209 (1977), *reprinted in* House Comm. on Educ. and Labor, 96th Cong., Black Lung Benefits Reform Act and Black Lung Benefits Revenue Act of 1977, at 612 (1979).

In amending the BLBA, Congress gave no indication that the Department should alter the long-established rules for imposing liability on individual coal mine operators and relieve a particular operator of liability created by the amendments based solely on its size. Even assuming the Department had authority to alter those requirements, the SBA's size standard requirements include the vast majority of coal mine operators as small businesses. Consequently, any alteration of the rule to exempt small businesses would necessarily nullify the amendments. There is simply no legal or rational basis that would justify alteration of the existing claim liability scheme with regard to rules implementing the ACA amendments to the BLBA.

The only possible way to lessen the impact of the proposed rules on small businesses would be to ensure that claims resulted in fewer awards. Given that, as noted above, the Department is not free to depart from the expressly stated intent of Congress in implementing legislation, that route is also problematic. The impact and intent of the amendments is clear, and since the ACA's enactment, the Department has applied them in a manner consistent with these proposed regulations.

The Department is aware of only one rule that could arguably be considered an agency policy choice—the proposed revision to § 725.309 stating that the requirement to demonstrate a change in an applicable condition of entitlement does not apply to re-filed survivors' claims governed by amended Section 422(l). This rule allows a survivor who had previously filed a claim that was denied under the law in effect before the ACA's enactment to re-file and obtain benefits pursuant to amended Section 422(l) if the miner was awarded benefits on a claim filed during his or her lifetime. As explained above, the Department believes this rule is fully justified under the plain language of the amendments and is consistent with traditional principles of *res judicata. See* discussion under § 725.309.

In any event, the Department believes the impact of this rule will be minimal. The universe of potential claimants who would benefit by this rule, and whose benefits would be the responsibility of a coal mine operator, is finite. The Department believes that, at most, there are only 445 survivors of awarded miners who have had a prior claim denied and who could not be confirmed as deceased through the SSA Death

Master file. The Department estimates that the actual number of re-filing survivors will be smaller. It is likely that a portion of these survivors are deceased because the Department does not have social security numbers for all dependents, and thus could not check those survivors against the Death Master file. Others may have re-married, and thus be ineligible for survivor's benefits, or will not re-file a claim for some other reason. Moreover, in at least some cases the operator or carrier liable for the miner's benefits will now be bankrupt, and the Black Lung Disability Trust Fund will be liable for the survivor's benefits. Based on these premises, the Department estimates that only 317 survivors will re-file for benefits under amended Section 422(l).

This relatively insignificant figure may even overstate the number of 422(l) re-filings in responsible operator cases. As of May 2, 2011, the Department had received only 75 re-filed claims eligible under amended Section 422(l). For fiscal year 2011, the year in which the largest cost is imposed by the ACA amendments, the number of claims actually re-filed or estimated to be re-filed, is 72. The Department received 42 re-filed claims filed in the first seven months of the year. It estimates that if such claims are filed at the same rate—six per month—the total for the year will be 72. This amounts to only 19.6% of the 368 actual and predicted 422(l) awards for 2011, and only 7% of the 1023 actual and predicted awards for that year.

Finally, the financial impact of proposed § 725.309 on coal mine operators is mitigated in two ways. First, an existing rule limits retroactive benefit payments in any awarded re-filed claim. Ordinarily, a survivor awarded benefits receives them beginning with the month in which the miner died. Under the existing rule, the survivor would not be entitled to benefits for the period prior to the day on which the prior denial became final. Second, an operator who ensures its BLBA liabilities with commercial insurance will not incur any additional costs because it has already purchased the insurance necessary to cover the survivor's claim. For these reasons, the Department does not believe that allowing re-filing survivors to receive benefits under amended Section 422(l) imposes significant hardships on small coal mine businesses. There is thus no reason to alter or abandon this proposed rule.

F. Questions for Comment To Assist Regulatory Flexibility Analysis

The Department invites all interested parties to submit comments regarding the costs and benefits of the proposed rule with particular attention to the effects of the rule on small entities described in the analysis above.

IX. Executive Order 13132 (Federalism)

The Department has reviewed this proposed rule in accordance with Executive Order 13132 regarding federalism, and has determined that it does not have ''federalism implications.'' E.O. 13132, 64 FR 43255 (Aug. 4, 1999). The proposed rule will not ''have substantial direct effects on the States, on the relationship between the national government and the States, or on the distribution of power and responsibilities among the various levels of government'' if promulgated as a final rule. *Id.*

X. Executive Order 12988 (Civil Justice Reform)

The proposed rule meets the applicable standards in Sections 3(a) and 3(b)(2) of Executive Order 12988, Civil Justice Reform, to minimize litigation, eliminate ambiguity, and reduce burden.

XI. Congressional Review Act

The proposed rule is not a ''major rule'' as defined in the Congressional Review Act, 5 U.S.C. 801 *et seq.* If promulgated as a final rule, this rule will not result in an annual effect on the economy of $100,000,000 or more; a major increase in costs or prices for consumers, individual industries, Federal, State or local government agencies, or geographic regions; or significant adverse effects on competition, employment, investment, productivity, innovation, or on the ability of United States-based enterprises to compete with foreign-based enterprises in domestic and export markets.

List of Subjects in 20 CFR Parts 718 and 725

Claims, Total Disability due to pneumoconiosis; coal miners' entitlement to benefits; survivors' entitlement to benefits, Workers' compensation.

For the reasons set forth in the preamble, the Department of Labor proposes to amend 20 CFR parts 718 and 725 as follows:

PART 718—STANDARDS FOR DETERMINING COAL MINERS' TOTAL DISABILITY OR DEATH DUE TO PNEUMOCONIOSIS

1. The authority citation for part 718 is revised to read as follows:

Authority: 5 U.S.C. 301; Reorganization Plan No. 6 of 1950, 15 FR 3174; 30 U.S.C. 901 *et seq.,* 902(f), 934, 936; 33 U.S.C. 901 *et seq.;* 42 U.S.C. 405; Secretary's Order 10–2009, 74 FR 58834.

2. Revise § 718.1 to read as follows:

§ 718.1 Statutory provisions.

Section 402(f) of the Act authorizes the Secretary of Labor to establish criteria for determining total disability or death due to pneumoconiosis to be applied in the processing and adjudication of claims filed under Part C of the Act. Section 402(f) further authorizes the Secretary of Labor, in consultation with the National Institute for Occupational Safety and Health, to establish criteria for all appropriate medical tests administered in connection with a claim for benefits. Section 413(b) of the Act authorizes the Secretary of Labor to establish criteria for the techniques used to take chest roentgenograms (x-rays) in connection with a claim for benefits under the Act.

3. Revise § 718.2 to read as follows:

§ 718.2 Applicability of this part.

(a) With the exception of the second sentence of § 718.204(a), this part is applicable to the adjudication of all claims filed on or after June 30, 1982 under Part C of the Act. It provides standards for establishing entitlement to benefits under the Act and describes the criteria for the development of medical evidence used in establishing such entitlement. The second sentence of § 718.204(a) is applicable to the adjudication of all claims filed after January 19, 2001.

(b) Publication of certain provisions or parts of certain provisions that apply only to claims filed prior to June 30, 1982, or to claims subject to Section 435 of the Act, has been discontinued because those provisions affect an increasingly smaller number of claims. The version of Part 718 set forth in 20 CFR, parts 500 to end, edition revised as of April 1, 2010, applies to the adjudication of all claims filed prior to June 30, 1982, as appropriate.

(c) The provisions of this part shall, to the extent appropriate, be construed together in the adjudication of claims.

4. Revise § 718.3(a) to read as follows:

§ 718.3 Scope and intent of this part.

(a) This part sets forth the standards to be applied in determining whether a

coal miner is or was totally disabled due to pneumoconiosis or died due to pneumoconiosis. It also specifies the procedures and requirements to be followed in conducting medical examinations and in administering various tests relevant to such determinations.

* * * * *

5. Revise § 718.202(a)(3) to read as follows:

§ 718.202 Determining the existence of pneumoconiosis.

(a) * * *

(3) If the presumptions described in §§ 718.304 or 718.305 are applicable, it shall be presumed that the miner is or was suffering from pneumoconiosis.

* * * * *

6. Revise § 718.205 to read as follows:

§ 718.205 Death due to pneumoconiosis.

(a) Benefits are provided to eligible survivors of a miner whose death was due to pneumoconiosis. In order to receive benefits based on a showing of death due to pneumoconiosis, a claimant must prove that:

(1) The miner had pneumoconiosis (*see* § 718.202);

(2) The miner's pneumoconiosis arose out of coal mine employment (*see* § 718.203); and

(3) The miner's death was due to pneumoconiosis as provided by this section.

(b) Death will be considered to be due to pneumoconiosis if any of the following criteria is met:

(1) Where competent medical evidence establishes that pneumoconiosis was the cause of the miner's death, or

(2) Where pneumoconiosis was a substantially contributing cause or factor leading to the miner's death or where the death was caused by complications of pneumoconiosis, or

(3) Where the presumption set forth at § 718.304 is applicable, or

(4) For survivors' claims filed after January 1, 2005, and pending on or after March 23, 2010, where the presumption at § 718.305 is invoked and not rebutted.

(5) However, survivors are not eligible for benefits where the miner's death was caused by a traumatic injury or the principal cause of death was a medical condition not related to pneumoconiosis, unless the claimant establishes (by proof or presumption) that pneumoconiosis was a substantially contributing cause of death.

(6) Pneumoconiosis is a ''substantially contributing cause'' of a miner's death if it hastens the miner's death.

7. Revise § 718.301 to read as follows:

§ 718.301 Establishing length of employment as a miner.

The presumptions set forth in §§ 718.302 and 718.305 apply only if a miner worked in one or more coal mines for the number of years required to invoke the presumption. The length of the miner's coal mine work history must be computed as provided by 20 CFR 725.101(a)(32).

8. Remove and reserve § 718.303.

§ 718.303 [Reserved]

9. Revise § 718.305 to read as follows:

§ 718.305 Presumption of pneumoconiosis.

(a) *Applicability.* This section applies to all claims filed after January 1, 2005, and pending on or after March 23, 2010.

(b) *Invocation.* (1) The claimant may invoke the presumption by establishing that—

(i) the miner engaged in coal-mine employment for fifteen years, either in one or more underground coal mines, or in coal mines other than underground mines in conditions substantially similar to those in underground mines, or in any combination thereof; and

(ii) the miner or survivor cannot establish entitlement under section 718.304 by means of chest x-ray evidence; and

(iii) the miner has, or had at the time of his death, a totally disabling respiratory or pulmonary impairment established pursuant to § 718.204, except that § 718.204(d) shall not apply.

(2) The conditions in a mine other than an underground mine will be considered ''substantially similar'' to those in an underground mine if the miner was exposed to coal-mine dust while working there.

(3) In a claim involving a living miner, a miner's affidavit or testimony, or a spouse's affidavit or testimony, may not be used by itself to establish the existence of a totally disabling respiratory or pulmonary impairment.

(4) In the case of a deceased miner, affidavits (or equivalent sworn testimony) from persons knowledgeable of the miner's physical condition shall be sufficient to establish total disability due to a respiratory or pulmonary impairment if no medical or other relevant evidence exists which addresses the miner's pulmonary or respiratory condition; however, such a determination shall not be based solely upon the affidavits or testimony of any person who would be eligible for benefits (including augmented benefits) if the claim were approved.

(c) *Facts presumed.* Once invoked, there will be rebuttable presumption—

(1) in a miner's claim, that the miner is totally disabled due to pneumoconiosis, or was totally disabled due to pneumoconiosis at the time of death; or

(2) in a survivor's claim, that the miner's death was due to pneumoconiosis.

(d) *Rebuttal.* (1) *Miner's Claim.* In a claim filed by a miner, the party opposing entitlement may rebut the presumption by establishing that—

(i) the miner does not, or did not, have pneumoconiosis as defined in section 718.201; or

(ii) the miner's respiratory or pulmonary total disability did not arise in whole or in part out of dust exposure in the miner's coal mine employment.

(2) *Survivor's Claim.* In a claim filed by a survivor, the party opposing entitlement may rebut the presumption by establishing that—

(i) the miner did not have pneumoconiosis as defined in section 718.201; or

(ii) the miner's death did not arise in whole or in part out of dust exposure in the miner's coal mine employment.

(3) In no case shall the presumption be considered rebutted on the basis of evidence demonstrating the existence of a totally disabling obstructive respiratory or pulmonary disease of unknown origin.

10. Remove and reserve § 718.306.

§ 718.306 [Reserved]

11. Revise the introductory text of Appendix C to Part 718 to read as follows:

Appendix C to Part 718—Blood-Gas Tables.

The following tables set forth the values to be applied in determining whether total disability may be established in accordance with § 718.204(b)(2)(ii). The values contained in the tables are indicative of impairment only. They do not establish a degree of disability except as provided in § 718.204(b)(2)(ii) of this subchapter, nor do they establish standards for determining normal alveolar gas exchange values for any particular individual. Tests shall not be performed during or soon after an acute respiratory or cardiac illness. A miner who meets the following medical specifications shall be found to be totally disabled, in the absence of rebutting evidence, if the values specified in one of the following tables are met:

* * * * *

PART 725—CLAIMS FOR BENEFITS UNDER PART C OF TITLE IV OF THE FEDERAL MINE SAFETY AND HEALTH ACT, AS AMENDED

12. The authority citation for part 725 is revised to read as follows:

Authority: 5 U.S.C. 301; Reorganization Plan No. 6 of 1950, 15 FR 3174; 30 U.S.C. 901

et seq., 902(f), 921, 932, 936; 33 U.S.C. 901 *et seq.;* 42 U.S.C. 405; Secretary's Order 10–2009, 74 FR 58834.

13. Revise § 725.1 to read as follows:

§ 725.1 Statutory provisions.

(a) *General.* Subchapter IV of the Federal Coal Mine Health and Safety Act of 1969, as amended by the Black Lung Benefits Act of 1972, the Federal Mine Safety and Health Amendments Act of 1977, the Black Lung Benefits Reform Act of 1977, the Black Lung Benefits Revenue Act of 1977, the Black Lung Benefits Amendments of 1981, the Black Lung Benefits Revenue Act of 1981, the Black Lung Consolidation of Responsibility Act of 2002, and the Patient Protection and Affordable Care Act of 2010 (together comprising the Black Lung Benefits Act (*see* § 725.101(a)(1)) provides for the payment of benefits to certain disabled coal miners and their survivors. *See* 725.201.

(b) *Part B.* Part B of subchapter IV of the Act provided that claims filed before July 1, 1973 were to be filed with, and adjudicated and administered by, the Social Security Administration (SSA). If awarded, these claims were paid by SSA out of appropriated funds. The Black Lung Consolidation of Administrative Responsibility Act (*see* subsection (h) of this section) transferred all responsibility for continued administration of these claims to the Department of Labor.

(c) *Part C.* Claims filed by a miner or survivor on or after January 1, 1974, are filed, adjudicated, and paid under the provisions of part C of subchapter IV of the Act. Part C requires that a claim filed on or after January 1, 1974, shall be filed under an applicable approved State workers' compensation law, or if no such law has been approved by the Secretary of Labor, the claim may be filed with the Secretary of Labor under section 422 of the Act. Claims filed with the Secretary of Labor under part C are processed and adjudicated by the Secretary. Individual coal mine operators are primarily liable for benefits; however, if the miner's last coal mine employment terminated before January 1, 1970, or if no responsible operator can be identified, benefits are paid by the Black Lung Disability Trust Fund. Claims adjudicated under part C are subject to certain incorporated provisions of the Longshore and Harbor Workers' Compensation Act.

(d) *Changes made by the Black Lung Benefits Reform Act of 1977.* The Black Lung Benefits Reform Act of 1977 contains a number of significant amendments to the Act's standards for determining eligibility for benefits. Among these are:

(1) A provision which clarifies the definition of ''pneumoconiosis'' to include any ''chronic dust disease of the lung and its sequelae, including respiratory and pulmonary impairments, arising out of coal mine employment'';

(2) A provision which defines ''miner'' to include any person who works or has worked in or around a coal mine or coal preparation facility, and in coal mine construction or coal transportation under certain circumstances;

(3) A provision that continued employment in a coal mine is not conclusive proof that a miner is not or was not totally disabled;

(4) A provision which authorizes the Secretary of Labor to establish standards and develop criteria for determining total disability or death due to pneumoconiosis with respect to a part C claim;

(5) Provisions relating to the treatment to be accorded a survivor's affidavit, certain X-ray interpretations, and certain autopsy reports in the development of a claim; and

(6) Other clarifying, procedural, and technical amendments.

(e) *Changes made by the Black Lung Benefits Revenue Act of 1977.* The Black Lung Benefits Revenue Act of 1977 established the Black Lung Disability Trust Fund which is financed by a specified tax imposed upon each ton of coal (except lignite) produced and sold or used in the United States after March 31, 1978. The Secretary of the Treasury is the managing trustee of the fund and benefits are paid from the fund upon the direction of the Secretary of Labor. The fund was made liable for the payment of all claims approved under part C of the Act for all periods of eligibility occurring on or after January 1, 1974, with respect to claims where the miner's last coal mine employment terminated before January 1, 1970, or where individual liability can not be assessed against a coal mine operator due to bankruptcy, insolvency, or the like. The fund was also authorized to pay certain claims which a responsible operator has refused to pay within a reasonable time, and to seek reimbursement from such operator. The purpose of the fund and the Black Lung Benefits Revenue Act of 1977 was to insure that coal mine operators, or the coal industry, will fully bear the cost of black lung disease for the present time and in the future. The Black Lung Benefits Revenue Act of 1977 also contained other provisions relating to the fund and authorized a coal mine operator to establish its own trust fund for the payment of certain claims.

(f) *Changes made by the Black Lung Benefits Amendments of 1981.* The Black Lung Benefits Amendments of 1981 made a number of significant changes in the Act's standards for determining eligibility for benefits and concerning the payment of such benefits, and applied the changes to claims filed on or after January 1, 1982. Among these are:

(1) The Secretary of Labor may re-read any X-ray submitted in support of a claim and may rely upon a second opinion concerning such an X-ray as a means of auditing the validity of the claim;

(2) The rebuttable presumption that the total disability of a miner with fifteen or more years employment in the coal mines, who has demonstrated a totally disabling respiratory or pulmonary impairment, is due to pneumoconiosis is no longer applicable (but the presumption was reinstated for claims filed after January 1, 2005, and pending on or after March 23, 2010, by the Patient Protection and Affordable Care Act of 2010 (*see* subsection (i) of this section));

(3) In the case of deceased miners, where no medical or other relevant evidence is available, only affidavits from persons not eligible to receive benefits as a result of the adjudication of the claim will be considered sufficient to establish entitlement to benefits;

(4) Unless the miner was found entitled to benefits as a result of a claim filed prior to January 1, 1982, benefits are payable on survivors' claims filed on and after January 1, 1982, only when the miner's death was due to pneumoconiosis (but for survivors' claims filed after January 1, 2005, and pending on or after March 23, 2010, an award of a miner's claim may form the basis for a survivor's entitlement under the Patient Protection and Affordable Care Act of 2010 (*see* subsection (i) of this section));

(5) Benefits payable under this part are subject to an offset on account of excess earnings by the miner; and

(6) Other technical amendments.

(g) *Changes made by the Black Lung Benefits Revenue Act of 1981.* The Black Lung Benefits Revenue Act of 1981 temporarily doubles the amount of the tax upon coal until the fund shall have repaid all advances received from the United States Treasury and the interest on all such advances. With respect to claims filed on or after January 1, 1982, the fund's authorization for the payment of interim benefits is limited to the payment of prospective benefits only.

These changes also define the rates of interest to be paid to and by the fund.

(h) *Changes made by the Black Lung Consolidation of Administrative Responsibility Act.* The Black Lung Consolidation of Administrative Responsibility Act of 2002 transferred administrative responsibility for all claims previously filed with or administered by the Social Security Administration to the Department of Labor, effective January 31, 2003. As a result, certain obsolete provisions in the BLBA (30 U.S.C. 904, 924a, and 945) were repealed. Various technical changes were made to other statutory provisions.

(i) *Changes made by the Patient Protection and Affordable Care Act of 2010.* The Patient Protection and Affordable Care Act of 2010 (the ACA) changed the entitlement criteria for miners' and survivors' claims filed after January 1, 2005, and pending on or after March 23, 2010, by reinstating two provisions made inapplicable by the Black Lung Benefits Amendments of 1981.

(1) For miners' claims meeting these date requirements, the ACA reinstated the rebuttable presumption that the miner is (or was) totally disabled due to pneumoconiosis if the miner has (or had) 15 or more years of qualifying coal mine employment and a totally disabling respiratory or pulmonary impairment.

(2) For survivors' claims meeting these date requirements, the ACA made two changes. First, it reinstated the rebuttable presumption that the miner's death was due to pneumoconiosis if the miner had 15 years or more of qualifying coal mine employment and was totally disabled by a respiratory or pulmonary impairment at the time of death. Second, it reinstituted derivative survivors' entitlement. As a result, an eligible survivor will be entitled to benefits if the miner is or was found entitled to benefits on his or her lifetime claim based on total disability due to pneumoconiosis arising out of coal-mine employment.

(j) *Longshore Act provisions.* The adjudication of claims filed under part C of the Act (*i.e.,* claims filed on or after January 1, 1974) is governed by various procedural and other provisions contained in the Longshore and Harbor Workers' Compensation Act (LHWCA), as amended from time to time, which are incorporated within the Act by section 422. The incorporated LHWCA provisions are applicable under the Act except as is otherwise provided by the Act or as provided by regulations of the Secretary. Although occupational disease benefits are also payable under the LHWCA, the primary focus of the procedures set forth in that Act is upon a time-definite-traumatic injury or death. Because of this and other significant differences between a black lung and longshore claim, it is determined, in accordance with the authority set forth in section 422 of the Act, that certain of the incorporated procedures prescribed by the LHWCA must be altered to fit the circumstances ordinarily confronted in the adjudication of a black lung claim. The changes made are based upon the Department's experience in processing black lung claims since July 1, 1973, and all such changes are specified in this part. No other departure from the incorporated provisions of the LHWCA is intended.

(k) *Social Security Act provisions.* Section 402 of Part A of the Act incorporates certain definitional provisions from the Social Security Act, 42 U.S.C. 301 *et seq.* Section 430 provides that the 1972, 1977 and 1981 amendments to part B of the Act shall also apply to part C ''to the extent appropriate.'' Sections 412 and 413 incorporate various provisions of the Social Security Act into part B of the Act. To the extent appropriate, therefore, these provisions also apply to part C. In certain cases, the Department has varied the terms of the Social Security Act provisions to accommodate the unique needs of the black lung benefits program. Parts of the Longshore and Harbor Workers' Compensation Act are also incorporated into part C. Where the incorporated provisions of the two acts are inconsistent, the Department has exercised its broad regulatory powers to choose the extent to which each incorporation is appropriate. Finally, Section 422(g), contained in part C of the Act, incorporates 42 U.S.C. 403(b)-(l).

14. In § 725.2, revise paragraphs (a) and (b) to read as follows:

§ 725.2 Purpose and applicability of this part.

(a) This part sets forth the procedures to be followed and standards to be applied in filing, processing, adjudicating, and paying claims filed under part C of subchapter IV of the Act.

(b) This part applies to all claims filed under part C of subchapter IV of the Act on or after June 30, 1982. Publication of certain provisions or parts of certain provisions that apply only to claims filed prior to June 30, 1982, or to claims subject to Section 435 of the Act, has been discontinued because those provisions affect an increasingly smaller number of claims. The version of Part 725 set forth in 20 CFR, parts 500 to end, edition revised as of April 1, 2010, applies to the adjudication of all claims filed prior to June 30, 1982, as appropriate.

* * * * *

15. In § 725.101, revise paragraphs (a)(1) and (a)(2) to read as follows:

§ 725.101 Definition and use of terms.

(a) * * *

(1) The *Act* means the Black Lung Benefits Act, 30 U.S.C. 901–44, as amended.

(2) The *Longshore Act* or *LHWCA* means the Longshore and Harbor Workers' Compensation Act, 33 U.S.C. 901–950, as amended from time to time.

* * * * *

16. In § 725.201:

a. Revise paragraph (a);

b. Remove paragraph (b); and

c. Redesignate paragraphs (c) and (d) as paragraphs (b) and (c).

The revision reads as follows:

§ 725.201 Who is entitled to benefits; contents of this subpart.

(a) Part C of the Act provides for the payment of periodic benefits in accordance with this part to:

(1) A miner who meets the conditions of entitlement set forth in 725.202(d); or

(2) The surviving spouse or surviving divorced spouse of a deceased miner who meets the conditions of entitlement set forth in 725.212; or,

(3) Where neither exists, the child of a deceased miner who meets the conditions of entitlement set forth in 725.218; or

(4) The surviving dependent parents, where there is no surviving spouse or child, or the surviving dependent brothers or sisters, where there is no surviving spouse, child, or parent, of a miner, who meet the conditions of entitlement set forth in 725.222; or

(5) The child of a miner's surviving spouse who was receiving benefits under Part C of the Act at the time of such spouse's death.

* * * * *

17. In § 725.212, republish introductory text of paragraph (a)(3) and revise paragraphs (a)(3)(i) and (a)(3)(ii) to read as follows:

§ 725.212 Conditions of entitlement; surviving spouse or surviving divorced spouse.

(a) * * *

(3) The deceased miner either:

(i) Is determined to have died due to pneumoconiosis; or

(ii) Filed a claim for benefits on or after January 1, 1982, which results or resulted in a final award of benefits, and the surviving spouse or surviving divorced spouse filed a claim for

benefits after January 1, 2005 which was pending on or after March 23, 2010.

* * * * *

18. In § 725.218, republish introductory text of paragraph (a) and revise paragraphs (a)(1) and (a)(2) to read as follows:

§ 725.218 Conditions of entitlement; child.

(a) An individual is entitled to benefits where he or she meets the required standards of relationship and dependency under this subpart (see § 725.220 and § 725.221) and is the child of a deceased miner who:

(1) Is determined to have died due to pneumoconiosis; or

(2) Filed a claim for benefits on or after January 1, 1982, which results or resulted in a final award of benefits, and the surviving child filed a claim for benefits after January 1, 2005 which was pending on or after March 23, 2010.

* * * * *

19. In § 725.222, republish introductory text of paragraph (a)(5) and revise paragraphs (a)(5)(i) and (a)(5)(ii) to read as follows:

§ 725.222 Conditions of entitlement; parent, brother or sister.

(a) * * *

(5) The deceased miner:

(i) Is determined to have died due to pneumoconiosis; or

(ii) Filed a claim for benefits on or after January 1, 1982, which results or resulted in a final award of benefits, and the surviving parent, brother or sister filed a claim for benefits after January 1, 2005 which was pending on or after March 23, 2010.

* * * * *

20. In § 725.309:

a. Remove paragraph (a);

b. Redesignate paragraphs (b) through (d) as paragraphs (a) through (c) and revise redesignated paragraph (c);

c. Redesignate paragraphs (d)(1) through (d)(5) as (c)(2) through (c)(6) and add a new paragraph (c)(1);

d. Remove paragraph (e); and

e. Redesignate paragraph (f) as paragraph (d).

The revision and addition read as follows:

§ 725.309 Additional claims; effect of prior denial of benefits.

* * * * *

(c) If a claimant files a claim under this part more than one year after the effective date of a final order denying a claim previously filed by the claimant under this part (see § 725.502(a)(2)), the later claim shall be considered a subsequent claim for benefits. A subsequent claim shall be processed and adjudicated in accordance with the provisions of subparts E and F of this part. Except as provided in paragraph (1) below, a subsequent claim shall be denied unless the claimant demonstrates that one of the applicable conditions of entitlement (see §§ 725.202(d) (miner), 725.212 (spouse), 725.218 (child), and 725.222 (parent, brother, or sister)) has changed since the date upon which the order denying the prior claim became final. The applicability of this paragraph may be waived by the operator or fund, as appropriate. The following additional rules shall apply to the adjudication of a subsequent claim:

(1) The requirement to establish a change in an applicable condition of entitlement shall not apply to a survivor's claim if the requirements of 725.212(a)(3)(ii), 725.218(a)(2), or 725.222(a)(5)(ii) are met, and the survivor's prior claim was finally denied prior to March 23, 2010.

* * * * *

21. In § 725.418:

a. Republish introductory text in paragraph (a);

b. Revise paragraphs (a)(1) and (a)(2);

c. Add new paragraph (a)(3);

d. Revise paragraph (d).

The revisions and addition read as follows:

§ 725.418 Proposed decision and order.

(a) Within 20 days after the termination of all informal conference proceedings, or, if no informal conference is held, at the conclusion of the period permitted by § 725.410(b) for the submission of evidence, the district director shall issue a proposed decision and order. A proposed decision and order is a document, issued by the district director after the evidentiary development of the claim is completed and all contested issues, if any, are joined, which purports to resolve a claim on the basis of the evidence submitted to or obtained by the district director. A proposed decision and order shall be considered a final adjudication of a claim only as provided in § 725.419. A proposed decision and order may be issued by the district director at any time during the adjudication of any claim if:

(1) Issuance is authorized or required by this part;

(2) The district director determines that its issuance will expedite the adjudication of the claim; or

(3) The district director determines that the claimant is a survivor who is entitled to benefits under 30 U.S.C. 932(l). In such cases, the district director may designate the responsible operator in the proposed decision and order regardless of whether the requirements of paragraph (d) of this section have been met. Any operator identified as liable for benefits under this paragraph may challenge the finding of liability by timely requesting revision of the proposed decision and order and specifically indicating disagreement with that finding. *See* 20 CFR 725.419(a), (b). In such cases, the district director shall allow all parties 30 days within which to submit liability evidence. At the end of this period, the district director shall issue a new proposed decision and order.

* * * * *

(d) The proposed decision and order shall reflect the district director's final designation of the responsible operator liable for the payment of benefits. Except as provided in paragraph (a)(3) of this subsection, no operator may be finally designated as the responsible operator unless it has received notification of its potential liability pursuant to § 725.407, and the opportunity to submit additional evidence pursuant to § 725.410. The district director shall dismiss, as parties to the claim, all other potentially liable operators that received notification pursuant to § 725.407 and that were not previously dismissed pursuant to § 725.410(a)(3).

Signed at Washington, DC, this 22nd day of March, 2012.

Gary A. Steinberg,

Acting Director, Office of Workers' Compensation Programs.

[FR Doc. 2012–7335 Filed 3–29–12; 8:45 am]

BILLING CODE 4510–CR–P

FEDERAL REGISTER

Vol. 77 Friday,

No. 62 March 30, 2012

Part IV

Federal Communications Commission

47 CFR Parts 15 and 79

Closed Captioning of Internet Protocol-Delivered Video Programming: Implementation of the Twenty-First Century Communications and Video Accessibility Act of 2010; Final Rule

FEDERAL COMMUNICATIONS COMMISSION

47 CFR Parts 15 and 79

[MB Docket No. 11–154; FCC 12–9]

Closed Captioning of Internet Protocol-Delivered Video Programming: Implementation of the Twenty-First Century Communications and Video Accessibility Act of 2010

AGENCY: Federal Communications Commission.

ACTION: Final rule.

SUMMARY: Pursuant to the Twenty-First Century Communications and Video Accessibility Act of 2010, the FCC revises its regulations to require closed captioning of IP-delivered video programming that is published or exhibited on television with captions after the effective date of the new regulations. The FCC also imposes closed captioning requirements on certain apparatus that receive or play back video programming, and on certain recording devices. This action will better enable individuals who are deaf or hard of hearing to view IP-delivered video programming, as Congress intended.

DATES: Effective April 30, 2012, except for §§ 79.4(c)(1)(ii), 79.4(c)(2)(ii) through (iii), 79.4(d)(1) through (4) and (d)(6) through (9), 79.4(e)(1) through (6), and 79.103(b)(3) through (4), which contain information collection requirements that are not effective until approved by the Office of Management and Budget. The FCC will publish a document in the **Federal Register** announcing the effective date for those sections. The incorporation by reference of certain publications listed in the rules is approved by the Director of the Federal Register as of April 30, 2012. Written comments on the Paperwork Reduction Act (PRA) modified information collection requirements must be submitted by the public, OMB and other interested parties on or before May 29, 2012.

FOR FURTHER INFORMATION CONTACT: For additional information on this proceeding pertaining to Section 202 of the CVAA, contact Diana Sokolow, *Diana.Sokolow@fcc.gov*, of the Policy Division, Media Bureau, (202) 418–2120. For additional information on this proceeding pertaining to Section 203 of the CVAA, contact Jeffrey Neumann, *Jeffrey.Neumann@fcc.gov*, of the Engineering Division, Media Bureau, (202) 418–7000. For additional information concerning the Paperwork Reduction Act information collection requirements contained in this document, contact Cathy Williams at 202–418–2918, or via the Internet at *PRA@fcc.gov*.

SUPPLEMENTARY INFORMATION: This is a summary of the Commission's *Report and Order,* FCC 12–9, adopted on January 12, 2012 and released on January 13, 2012, and the Erratum thereto, released on January 30, 2012. The full text of this document is available for public inspection and copying during regular business hours in the FCC Reference Center, Federal Communications Commission, 445 12th Street SW., CY–A257, Washington, DC 20554. This document will also be available via ECFS (*http://www.fcc.gov/cgb/ecfs/*). (Documents will be available electronically in ASCII, Word 97, and/or Adobe Acrobat.) The complete text may be purchased from the Commission's copy contractor, 445 12th Street SW., Room CY–B402, Washington, DC 20554. To request this document in accessible formats (computer diskettes, large print, audio recording, and Braille), send an email to *fcc504@fcc.gov* or call the Commission's Consumer and Governmental Affairs Bureau at (202) 418–0530 (voice), (202) 418–0432 (TTY).

Paperwork Reduction Act of 1995 Analysis

This document contains modified information collection requirements. The Commission, as part of its continuing effort to reduce paperwork burdens, invites the general public to comment on the information collection requirements contained in this *Report and Order* as required by the Paperwork Reduction Act of 1995, Public Law 104–13. In addition, the Commission notes that pursuant to the Small Business Paperwork Relief Act of 2002, Public Law 107–198, *see* 44 U.S.C. 3506(c)(4), we previously sought specific comment on how the Commission might further reduce the information collection burden for small business concerns with fewer than 25 employees. We did not receive any comments specifically addressing this issue. In the present document, we have assessed the effects of the new requirements on small businesses, including those with fewer than 25 employees, in the Final Regulatory Flexibility Analysis (''FRFA'') below.

Summary of the Report and Order

I. Introduction

1. Pursuant to our responsibilities under the Twenty-First Century Communications and Video Accessibility Act of 2010 (''CVAA''),[1] this *Report and Order* adopts rules governing the closed captioning requirements for the owners, providers, and distributors of video programming delivered using Internet protocol (''IP'').[2] This *Report and Order* also adopts rules governing the closed captioning capabilities of certain apparatus on which consumers view video programming. Closed captioning is the visual display of the audio portion of video programming, which provides access to individuals who are deaf or hard of hearing. Prior to the adoption of the CVAA, the Communications Act of 1934, as amended (the ''Act''), required the use of closed captioning on television, but not on IP-delivered video programming that was not part of a broadcaster or multichannel video programming distributor (''MVPD'') service. That changed with the enactment of the CVAA, which directed the Federal Communications Commission (''Commission'') to revise its regulations to require closed captioning of IP-delivered video programming that is published or exhibited on television with captions after the effective date of the new regulations. Further, the CVAA directed the Commission to impose closed captioning requirements on certain apparatus that receive or play back video programming, and on certain recording devices. The rules we adopt here will better enable individuals who are deaf or hard of hearing to view IP-delivered video programming, as Congress intended. Moreover, we believe these benefits of our rules to deaf or hard of hearing consumers will outweigh the affected entities' costs of compliance.

2. As discussed in Section III below, we adopt the following closed captioning requirements for the owners, providers, and distributors of IP-delivered video programming under Section 202(b) through (c) of the CVAA. Specifically, we adopt rules that will:

- Specify the obligations of entities subject to Section 202(b) by:
  - Requiring video programming owners to send required caption files for IP-delivered video programming to video programming distributors and providers along with program files;

[1] Public Law 111–260, 124 Stat. 2751 (2010). *See also* Amendment of Twenty-First Century Communications and Video Accessibility Act of 2010, Public Law 111–265, 124 Stat. 2795 (2010) (making technical corrections to the CVAA).

[2] The CVAA defines ''Internet protocol'' as including ''Transmission Control Protocol and a successor protocol or technology to Internet protocol.'' Public Law 111–260, sec. 206(5).

○ Requiring video programming distributors and providers to enable the rendering or pass through of all required captions to the end user, including through the hardware or software that a distributor or provider makes available for this purpose;

○ Requiring video programming owners and video programming distributors and providers to agree upon a mechanism to make available to video programming distributors and providers information on video programming that is subject to the IP closed captioning requirements on an ongoing basis; and

○ Requiring video programming owners to provide video programming distributors and providers with captions of at least the same quality as the television captions for the same programming, and requiring distributors and providers to maintain the quality of the captions provided by the video programming owner.

• Create a schedule of deadlines under which:

○ All prerecorded programming that is not edited for Internet distribution and is subject to the new requirements must be captioned if it is shown on television with captions on or after the date six months after publication of these rules in the **Federal Register**;

○ All live and near-live programming subject to the new requirements must be captioned if it is shown on television with captions on or after the date 12 months after publication of these rules in the **Federal Register**;

○ All prerecorded programming that is edited for Internet distribution and is subject to the new requirements must be captioned if it is shown on television with captions on or after the date 18 months after publication of these rules in the **Federal Register**; and

○ Archival content must be captioned according to the following deadlines: Beginning two years after publication of these rules in the **Federal Register**, all programming that is subject to the new requirements and is already in the VPD's library before it is shown on television with captions must be captioned within 45 days after it is shown on television with captions. Beginning three years after publication of these rules in the **Federal Register**, such programming must be captioned within 30 days after it is shown on television with captions. Beginning four years after publication of these rules in the **Federal Register**, such programming must be captioned within 15 days after it is shown on television with captions;

• Craft procedures by which video programming providers and owners may petition the Commission for exemptions from the new requirements based on economic burden;

• Not treat a *de minimis* failure to comply with the new rules as a violation, and permit entities to comply with the new requirements by alternate means, as provided in the CVAA; and

• Adopt procedures for complaints alleging a violation of the new requirements.

3. As discussed in Section IV below, we adopt the following closed captioning requirements for the manufacturers of devices used to view video programming under Section 203 of the CVAA. Specifically, we adopt rules that will:

• Establish what apparatus are covered by Section 203:

○ All physical devices designed to receive and play back video programming, including smartphones, tablets, personal computers, and television set-top boxes;

○ All ''integrated software'' in covered devices (that is, software installed in the device by the manufacturer before sale or that the manufacturer requires the consumer to install after sale); and

○ All recording devices and removable media players;

• Exclude professional and commercial equipment from the scope of Section 203;

• Exempt display-only monitors as set forth in Section 203, and establish procedures for finding a lack of achievability or technical feasibility;

• Establish the requirements for devices covered by Section 203:

○ Specify how covered apparatus must implement closed captioning by adopting functional display standards;

○ Require apparatus to render or pass-through closed captioning on each of their video outputs;

○ Decline to grant blanket waivers or exempt any device or class of devices from our rules based on achievability or the waiver provisions set forth in Section 203;

• Establish general complaint procedures and modify our existing television receiver closed captioning decoder requirements to conform to screen size and achievability provisions; and

• Establish a deadline for compliance of January 1, 2014 by which devices must comply with the requirements of Section 203.

Finally, we adopt a safe harbor for use of a particular interchange and delivery format.

II. Background

4. On October 8, 2010, President Obama signed the CVAA into law, requiring the Commission to establish closed captioning rules for the owners, providers, and distributors of IP-delivered video programming, and for certain apparatus on which consumers view video programming. The CVAA also required the Commission to establish an advisory committee known as the Video Programming Accessibility Advisory Committee (''VPAAC''), which submitted its statutorily mandated report on closed captioning of IP-delivered video programming to the Commission on July 12, 2011.[3] The Commission initiated this proceeding in September 2011.[4] In the *NPRM,* the Commission provided extensive background information regarding the history of closed captioning, IP-delivered closed captioning, the applicable provisions of the CVAA, and the VPAAC Report, which we need not repeat here. The CVAA directs the Commission to revise its rules within six months of the submission of the VPAAC Report to require closed captioning on IP-delivered video programming and include a schedule of deadlines for the provision of such closed captioning. By the same date, Section 203 of the CVAA directs the Commission to adopt requirements for the closed captioning capabilities of certain apparatus. To fulfill these statutory mandates, we adopt the rules discussed below.[5]

5. As discussed in the *NPRM,* in 1997 the Commission first adopted rules and implementation schedules for closed captioning of video programming on television.[6] In recent years, the Internet has become a powerful method of video programming distribution, and the amount of video content available on the Internet is increasing significantly each year. IP-delivered video programming today takes a number of forms, such as programming delivered to a personal computer, tablet device,

[3] *See* First Report of the Video Programming Accessibility Advisory Committee on the Twenty-First Century Communications and Video Accessibility Act of 2010: Closed Captioning of Video Programming Delivered Using Internet Protocol, July 12, 2011, *available at http://transition.fcc.gov/cgb/dro/VPAAC/First_VPAAC_Report_to_the_FCC_7-11-11_FINAL.pdf* (''VPAAC Report'').

[4] *Closed Captioning of Internet Protocol-Delivered Video Programming: Implementation of the Twenty-First Century Communications and Video Accessibility Act of 2010,* FCC 11–138, 76 FR 59963, Sept. 28, 2011 (''*NPRM*'').

[5] Given the tight statutory deadline, we decline to consider proposals that go beyond implementation of the specific requirements of the CVAA.

[6] *See NPRM; see also Closed Captioning of Video Programming,* FCC 97–279, 62 FR 48487, Sept. 16, 1997 (''*1997 Closed Captioning Order*''), recon. granted in part, *Order on Reconsideration,* FCC 98–236, 63 FR 55959, Oct. 20, 1998 (''*1998 Closed Captioning Recon. Order*'').

cellular telephone, game console, Blu-ray player, or set-top box. Through the CVAA, Congress sought to ''update the communications laws to help ensure that individuals with disabilities are able to fully utilize communications services and equipment and better access video programming.'' [7] Video programming owners sometimes make their video programming available via IP through their own Web sites, and sometimes they enter into licensing agreements with third parties to distribute their video programming using IP. Although closed captioning of IP-delivered video programming has not been required previously, certain companies have chosen to make it available voluntarily. When a video programming owner enters into a licensing agreement with a third party to enable the third party to distribute the owner's programming via IP, the video programming owner or other entity may provide a closed captioning file to the third-party distributor, which may then make the closed captioning available to end users. The rules adopted below will implement new responsibilities regarding the distribution of video programming over IP, as well as new requirements for the apparatus consumers use to view video programming.

III. Section 202 of the CVAA

A. Entities Subject to Section 202(b) of the CVAA and Their Obligations

1. Definition of Video Programming Owner, Distributor, and Provider

6. Provisions in Section 202(b) and (c) of the CVAA use the terms ''video programming owner'' (''VPO''), ''video programming distributor'' (''VPD''), and ''video programming provider'' (''VPP'') without defining these terms. Accordingly, the Commission must define these terms for purposes of our implementing regulations.[8]

7. *Video Programming Owner.* As explained below, we define a VPO as ''any person or entity that either (i) licenses the video programming to a video programming distributor or provider that makes the video programming available directly to the end user through a distribution method that uses Internet protocol; or (ii) acts as the video programming distributor or provider, and also possesses the right to license the video programming to a video programming distributor or provider that makes the video programming available directly to the end user through a distribution method that uses Internet protocol.'' In the *NPRM,* the Commission proposed to define a VPO as ''any person or entity that owns the copyright of the video programming delivered to the end user through a distribution method that uses IP.'' Several commenters support this proposal. DIRECTV, however, proposes that the Commission ''should define 'owner' as the single entity that licenses the copyrighted work for distribution,'' and Consumer Groups argue that the definition of VPO proposed in the *NPRM* should be ''more robust.'' We agree with DIRECTV that the definition proposed in the *NPRM* is problematic for present purposes because multiple copyright owners may possess particular rights in a single piece of video programming. In this context, we are interested in the person or entity that licenses the video programming to a video programming distributor or provider that makes the video programming available directly to the end user through a distribution method that uses IP. Defining a VPO in this manner will ensure that a single entity is responsible for fulfilling the VPO's responsibilities, which is beneficial from an enforcement perspective given that an alternative definition may create problems in identifying the responsible VPO. We expect that the VPO often, but not always, will be the copyright owner. Even in instances in which the VPO does not itself create captions for the programming, we expect that the VPO (as we define that term) will be better positioned than the VPD or VPP to obtain the captions, since by definition the VPO is higher up the distribution chain than the VPD or VPP. Accordingly, we adopt DIRECTV's proposed definition of VPO. We recognize, however, that there may be situations where the VPO is also the VPD or VPP (for example, if the VPO makes its video programming available through its own Web site), and we believe that our definition also should cover VPOs in such situations, even though there is no licensing agreement in such circumstances.[9] Accordingly, we expand the definition of VPO proposed by DIRECTV to include any person or entity that acts as the video programming distributor or provider, and also possesses the right to license the video programming to a video programming distributor or provider that makes the video programming available directly to the end user through a distribution method that uses Internet protocol. Thus, the definition of VPO is intended to include entities that have the right to license IP distribution of programming to others, but make the programming available through their own Web sites, as well as entities that license others to distribute the video programming to the end users.

8. *Video Programming Distributor and Provider.* We adopt the definition of VPD and VPP that the Commission proposed in the *NPRM,* with one modification. Specifically, we define a VPD or VPP as any person or entity that makes video programming available directly to the end user through a distribution method that uses IP. We have added the phrase ''person or'' to this proposed definition to parallel the VPO definition adopted herein, and to make explicit our coverage of an individual distributor or provider, to the extent one exists.

9. We affirm the *NPRM*'s tentative conclusion to define VPDs and VPPs as meaning the same thing. Congress directed the Commission to ''describe the responsibilities of video programming providers *or* distributors,'' leaving it to the Commission's discretion to determine whether to define the terms as interchangeable. Based on the existing record, we find that in the context of IP closed captioning, VPDs and VPPs are both people or entities that make video programming available directly to the end user through a distribution method that uses IP. We have no factual basis on which to distinguish between VPDs and VPPs and the record does not support different definitions.[10] Although we recognize that certain provisions in the CVAA reference VPPs but not VPDs, we disagree with TWC that Congress affirmatively decided that VPDs and VPPs are distinct categories with distinct responsibilities, and we do not see any support for that position in the legislative history. Thus, we find no legal or policy basis for interpreting VPDs and VPPs differently. In this regard, we note that several commenters in the record support our finding. And we also note that, although the Commission in the *NPRM* highlighted the fact that certain statutory provisions

[7] *See* S. Rep. No. 111–386, 111th Cong., 2d Sess. at 1 (2010) (''Senate Committee Report''); H.R. Rep. No. 111–563, 111th Cong., 2d Sess. at 19 (2010) (''House Committee Report'').

[8] The definitions we adopt for the terms VPO, VPD and VPP in this *Report and Order* apply only to those terms as used with regard to Sections 202 and 203 of the CVAA, and not to those terms in other contexts, such as our television closed captioning or video description rules.

[9] Where the VPO is also the VPD or VPP, it may not rely on a good faith use of the mechanism described in Section III.A.2, *infra,* because as the VPO, it should know whether its programming is shown on television with captions after the effective date of our new rules.

[10] Since for the reasons stated in this paragraph, we define VPDs and VPPs as meaning the same thing, we will refer to them as ''VPDs'' throughout the rest of this *Report and Order.*

reference VPPs, but not VPDs, and asked specifically about the relevance of this, commenters did not provide any insight on this issue.

10. We note that commenters that suggest that VPD and VPP should mean different things propose definitions that would reach entities that we do not believe Congress intended to cover through the CVAA, such as an Internet service provider (''ISP'') from which end users receive Internet access. Congress specifically excluded such entities from obligations under the CVAA for advanced communications services, and similarly we do not think that Congress intended to reach them here. We agree with ACA, ITTA, and NCTA that VPDs and VPPs should not include entities that are acting as ISPs, simply providing access to video programming distributed by another entity.[11] We find that regulating such entities as part of the IP closed captioning regime would be unworkable; for example, Section 202(b) of the CVAA requires VPDs and VPPs to make ''a good faith effort to identify video programming subject to the'' closed captioning requirements, a requirement that could not be met by an entity that merely provides Internet access and is not aware of the video programming content that it passes along the distribution chain.

11. For the reasons explained below, the IP closed captioning rules will not apply to a broadcaster's or MVPD's provision of programming that is subject to the Commission's television closed captioning rules. Section 79.1 imposes television closed captioning requirements on video programming distributors, which it defines as ''[a]ny television broadcast station licensed by the Commission and any [MVPD] as defined in § 76.1000(e) of this chapter, and any other distributor of video programming for residential reception that delivers such programming directly to the home and is subject to the jurisdiction of the Commission.'' In the *NPRM,* the Commission proposed to define VPD in the IP closed captioning context as ''any entity that makes available directly to the end user video programming through a distribution method that uses IP.'' Some commenters support the proposed definition. Others assert that rather than ''IP'' distribution, the Commission's regulations should focus more specifically on online or Internet distribution. These commenters express concern over the confusion that would result from new rules that cover some of the same MVPD services, such as IPTV,[12] that are covered by the Commission's existing television closed captioning rules. We agree with ACA that we must presume Congress knew that MVPDs are subject to existing closed captioning rules. The television closed captioning rules are broader than the IP closed captioning rules adopted herein, insofar as the television closed captioning rules require closed captioning for all new nonexempt English- and Spanish-language video programming, whereas the CVAA only requires closed captioning of IP-delivered video programming if the programming is ''published or exhibited on television with captions after the effective date'' of the new rules. Congress did not give any indication that it intended the new IP closed captioning rules to override the existing television closed captioning rules where an MVPD provides its service via IP. Thus, we clarify that the new IP closed captioning rules do not apply to traditional managed video services that MVPDs provide to their MVPD customers within their service footprint, regardless of the transmission protocol used; rather, such services are already subject to § 79.1 of the Commission's rules.[13]

12. All video programming that is available on the Internet is IP-delivered, but not all video programming that is delivered via IP is Internet programming. We therefore decline to limit application of the IP closed captioning requirements to programming that VPDs deliver over the Internet. While some portions of the legislative history reference ''Internet distribution,'' we agree with Consumer Groups that such references were not intended to limit the reach of Section 202(b) to Internet-delivered video programming. To the contrary, consistent with the language of the statute itself, the legislative history made repeated references to ''Internet protocol.'' We agree with Consumer Groups that if Congress had intended the CVAA to apply more narrowly to a certain class of IP-delivered video programming, it would have said so. We note that, as technology evolves, a decision to limit the application of the new IP closed captioning rules to ''Internet'' or ''online'' video programming could have unforeseen consequences. For the same reasons, we disagree with ACA's proposal that an MVPD be subject to the new IP closed captioning requirements only when it is ''acting as an online video distributor outside its MVPD footprint.'' An MVPD that distributes video programming online within its MVPD footprint, but not as part of its MVPD service subject to § 79.1, will be subject to new § 79.4. In general, an MVPD will be subject to the new IP closed captioning rules if it is distributing IP-delivered video programming that is not part of the traditional managed video services that it provides its MVPD customers within its service footprint. The distinction that ACA proposes, which would exclude from coverage online video distribution within the MVPD's footprint, is unsupported by the CVAA and its legislative history.

13. We are not persuaded by the concerns of Consumers Groups that the proposed definition of VPD is both under-inclusive and over-inclusive. Specifically, Consumer Groups argue that the proposed definition is under-inclusive, in that it includes the term ''directly'' and thus may not reach certain entities, and over-inclusive, in that it ''may lay captioning responsibility at the feet of network providers and other entities that lack the ability to assist consumers in fixing videos with insufficient or missing captions.'' We do not believe that inclusion of the term ''directly'' in the definition of VPD is under-inclusive; rather, use of the word ''directly'' avoids placing requirements on certain entities, such as ISPs, that are not aware of the video programming content that they pass along the distribution chain. Our definition is also consistent with Section 202(b) of the CVAA, which requires the Commission's regulations to ''clarify that * * * the terms 'video programming distributors' and 'video programming providers' include an entity that makes available *directly* to the end user video programming through a distribution method that uses Internet protocol.'' As to the argument that the proposed definition is over-inclusive, we find that VPDs, as we have defined them, will in fact include the entities that are best suited to address consumer concerns in the first instance. We agree with Consumer Groups that an entity that merely caches Internet videos hosted on another Web site or server is not a VPD.

[11] To the extent an ISP distributes video programming directly to end users, for example by making video programming available on its own Web site, the ISP is not merely providing access to the video programming distributed by another VPD, but rather, is acting as a VPD.

[12] Internet Protocol Television (''IPTV'') is a technology used by some MVPDs to deliver television services. Video content typically travels over a managed, two-way IP network and can be delivered to the subscriber using a combination of fiber and Digital Subscriber Line (''xDSL'') over copper technology.

[13] By ''traditional managed video service,'' we mean a service through which an MVPD offers multiple channels of video programming, including IP-based video offerings such as those provided by AT&T.

2. Responsibilities of Video Programming Owners, Distributors, and Providers

14. Section 202(b) of the CVAA requires the Commission's regulations to ''describe the responsibilities of video programming providers or distributors and video programming owners.'' It also requires the Commission to ''establish a mechanism to make available to video programming providers and distributors information on video programming subject to the Act on an ongoing basis.'' The purpose of the required ''mechanism'' is to enable VPDs to determine whether the video programming that they intend to make available via IP has been shown on television with captions after the effective date of the new rules. Section 202(b) further provides that the Commission's regulations for closed captioning of IP-delivered video programming:

> Shall consider that the video programming provider or distributor shall be deemed in compliance if such entity enables the rendering or pass through of closed captions and makes a good faith effort to identify video programming subject to the Act using the mechanism [referenced above].

15. *Video programming owner responsibilities.* We adopt the *NPRM*'s proposal to require VPOs to send program files to VPDs with all required captions.[14] We find that placing such an obligation on VPOs is consistent with the CVAA and the record in this proceeding.[15] Although we acknowledge that the Commission chose not to directly regulate video programming owners in the television context and that there are similarities between the television and IP captioning statutory schemes, the record in this proceeding reflects that ''closed captioning over television and IP are fundamentally different and merit different regulatory approaches.''

16. Our decision is consistent with the statutory language. Section 202(b) of the CVAA requires the Commission to revise its regulations to require closed captioning[16] of IP-delivered video programming that was shown on broadcast or MVPD-delivered television with captions after the effective date of the new regulations. While the CVAA does not direct the Commission to impose captioning obligations on VPOs, it clearly authorizes the Commission to promulgate rules directly affecting VPOs as well as VPDs.[17] Direct regulation of VPOs closes a potential gap in the statutory scheme. Section 202(b) of the CVAA provides that a VPD ''shall be deemed in compliance if such entity enables the rendering or pass through of closed captions and makes a good faith effort to identify video programming subject to the [CVAA] using the mechanism created'' herein for identifying such programming.[18] Under this provision, a VPD is responsible for rendering or pass through of closed captions and good faith efforts to identify programming subject to the CVAA, and is protected from liability for distributing programming without closed captions if those two requirements are met. We recognize that, in the absence of a requirement that VPOs provide captioning, VPDs and VPOs may nonetheless enter into private contracts placing such an obligation on VPOs. We find, however, that it is more efficient and less costly to place appropriate obligations on VPOs and on VPDs, rather than to expect the parties to enter into contracts mandating the same obligations. Thus, we believe that imposing responsibility on VPOs as well as VPDs is both consistent with the Commission's authority to identify the responsibilities of VPOs under the statute and necessary to further the statutory purpose of helping to ''ensure that individuals with disabilities are able to fully utilize communications services and equipment and better access video programming.''[19]

17. Further, we find that imposing responsibility on VPOs is consistent with the statutory directive to establish a ''mechanism'' to make available to VPDs information on video programming subject to the Act on an ongoing basis because it will help to ensure that the mechanism the statute provides for will function effectively. In contrast, leaving VPOs' responsibilities to be defined entirely by private contractual arrangements would be more costly and less efficient than appropriately allocating certain responsibilities among both VPOs and VPDs by Commission rule.

18. We also find that placing obligations on VPOs will ensure that the Commission may hold a responsible party accountable for violations of the CVAA. For example, if a VPO erroneously certifies to a VPD that captions are not required for a particular program, and the VPD makes a good faith use of the ''mechanism'' discussed below, there would be no entity to hold legally accountable (*e.g.,* with respect to a consumer complaint or enforcement action) in the absence of rules placing obligations on the VPO. We note that Consumer Groups state that, ''to the extent that the Commission interprets the CVAA to require a safe harbor for VPDs and VPPs who pass through or render caption files, * * * we would support a decision by the Commission to make VPOs and their licensees and sublicensees responsible for captioning IP-delivered video programming to the extent the CVAA does not permit placing that responsibility with VPPs or VPDs.'' Thus, Consumer Groups support the approach we adopt here. In that regard, we note that Consumer Groups initially expressed concern about placing responsibilities on both VPDs and VPOs on the ground that consumers and the Commission would be faced with the potentially difficult task of identifying VPOs against whom to file a complaint or seek enforcement. To address these concerns, as explained below, we make clear that consumers will be free to file their complaints against VPDs, and the Commission will require VPDs to provide information on

[14] We leave it to the parties to determine how or whether a VPO should convey to a VPD that captions are not required for a particular program because it has not been shown on television with captions, even though the VPO is providing a caption file. We strongly encourage VPDs to provide captioning for programming delivered via IP in all instances in which the VPO makes an appropriate captioning file available.

[15] Of course, a VPD that is also a VPO is subject to the requirements of VPDs and the requirements of VPOs, such that it must produce the captions.

[16] The rules we adopt here define ''closed captioning'' to mean, ''The visual display of the audio portion of video programming pursuant to the technical specifications set forth in this part.'' The *NPRM* defined the term to mean, ''The visual display of the audio portion of video programming.'' We have added the phrase ''pursuant to the technical specifications set forth in this part'' to follow the approach used to define the term ''closed captioning'' for purposes of the Commission's television closed captioning requirements, 47 CFR 79.1(a)(4), and to clarify that the closed captioning requirements we adopt herein are subject to the applicable technical specifications.

[17] Specifically, under the ''requirements for regulations,'' the CVAA directs the Commission to ''describe the responsibilities of video programming providers or distributors and *video programming owners.'' See* 47 U.S.C. 613(c)(2)(D)(iv) (emphasis added). *See also* 47 U.S.C. 613(c)(2)(D)(vii) (directing that the Commission's regulations ''provide that de minimis failure to comply with such regulations by a video programming provider or *owner* shall not be treated as a violation of the regulations.'') (emphasis added); 47 U.S.C. 613(c)(2)(C) (authorizing the Commission to delay or waive its IP closed captioning regulations to the extent it finds the ''regulations would be economically burdensome to providers of video programming or *program owners''*) (emphasis added). The legislative history sheds no additional light on the issue of Congress's intent with respect to direct regulation of VPOs.

[18] *See* 47 U.S.C. 613(c)(2)(D)(vi). The previous version of Section 713 of the Act, which addressed television closed captioning, did not contain a comparable limitation on the imposition of VPD responsibilities. The mechanism that the CVAA provides for is discussed later in this Section III.A.2.

[19] Senate Committee Report at 1; House Committee Report at 19.

the VPO's identity if the VPD claims that the captioning problem was the fault of the VPO. Accordingly, we agree with Verizon that regulating VPOs as well as VPDs will not have a negative impact on consumers.

19. Our examination of the record in this proceeding likewise provides support for imposing duties directly on VPOs. Numerous commenters support the *NPRM's* proposal to impose captioning obligations on content owners rather than assign such obligations exclusively to VPDs. Even one VPO recognizes that the Commission should allocate responsibilities among the parties in the chain of IP content delivery, with requirements placed on both VPOs and VPDs. Commenters argue that ''VPOs are in the best position to assess whether captions are required for a particular program since they have knowledge of which content has been shown on television,'' and ''as the copyright holders, the VPOs typically possess the necessary legal rights to modify the content and insert closed captions.'' We agree, and believe that these factors further justify placing the obligation to provide required captions on VPOs.[20] We also agree with Google that placing such obligations on VPDs would be unduly burdensome, as their systems generally do not enable them to review video content, determine whether captions are required, and then insert captions. Further, for the reasons above, we agree with commenters who suggest that imposing obligations on VPOs would be most consistent with the statute.

20. We agree with commenters who argue that key differences between the television and IP contexts justify different regulatory treatment of VPOs. Similar to the CVAA, the closed captioning statute governing broadcast television and MVPD services authorizes the Commission to regulate closed captioning of programming by providers and owners of video programming. The Commission decided in 1997 to place the responsibility for compliance with the closed captioning rules on video programming distributors, defined as all entities who provide video programming directly to customers' homes, regardless of distribution technology used (*i.e.,* broadcast or MVPD). The Commission reasoned in 1997 that placing compliance obligations on distributors would promote more efficient monitoring and enforcement of the closed captioning rules, because there would typically be a single entity to which complaints must be addressed, and there would be no need for tracking the entities responsible for producing programs alleged to violate the rules. The Commission expressed an expectation that distributors would privately negotiate with program owners regarding ''an efficient allocation of captioning responsibilities'' and that program owners would ''cooperate with distributors to ensure that nonexempt programming is closed captioned in accordance with our rules.'' Thus, the Commission chose to limit regulatory oversight to distributors, notwithstanding that excluding program owners from the rules would leave a liability gap in the television/MVPD captioning context. In that regard, the Commission explained, ''[d]istributors will not be held responsible for situations where a program source falsely certifies that programming delivered to the distributor meets our captioning requirements if the distributor is unaware that the certification is false.''

21. Notwithstanding the statutory and regulatory similarities between IP and television closed captioning, we find that a different regulatory approach for the IP closed captioning regime than the television closed captioning regime is justified by fundamental differences between television and IP distribution. ''[I]n the television context,'' as Microsoft explains, ''a single broadcaster, MVPD, or similar entity is responsible for the delivery of video programming,'' whereas ''video on the Internet often will pass through the hands of numerous parties on its way to the consumer'' and VPDs in a chain often cannot identify one another, lack contractual relationships, and will not possess the rights necessary to caption a work. Indeed, Congress mandated that the Commission establish a mechanism to make available to VPDs information about whether programming has aired on television, a mechanism that is unnecessary in the television context. We believe that this characteristic of the IP distribution chain helps to justify imposing obligations directly on VPOs in the IP context, whereas the Commission reasonably believed that in the television/MVPD context it could rely on video programming distributors or providers working with program suppliers with whom they have close contractual relationships. Even where a distribution chain is complex and the VPO itself does not create the closed captions, we expect that the VPO will be better positioned than the VPD to obtain the captions, since by definition the VPO is farther up the distribution chain than the VPD.

22. We also believe that the differences between video programming distributors vis-à-vis video programming owners in the television and IP closed captioning contexts help to justify different regulatory approaches. Importantly, the IP closed captioning provisions of the CVAA reach a broader class of VPDs than the video programming distributors subject to the Commissions' television closed captioning rules—*i.e.,* broadcasters and MVPDs. This is significant because after the Commission placed sole liability on distributors in the television closed captioning context, we understand that in practice broadcasters and MVPDs typically placed certain obligations on content owners by contract. As explained above, we find that it is more efficient and less costly to place appropriate obligations on VPOs and on VPDs, rather than to expect the parties to enter into contracts placing certain obligations on VPOs. The record indicates that captioning problems in the television context are sometimes the fault of the content owner rather than the distributor, and so private contractual arrangements may indemnify television distributors in such instances. We are not confident that all VPDs of IP-delivered video programming (including online video distributors and other new media companies) have sufficient leverage and ability to obtain similar contract clauses or even have privity of contract with the entity with captioning rights. Thus, although the Commission concluded in the television context that holding distributors responsible for captioning would be the most efficient approach, in the IP closed captioning context we find it would be most effective to regulate both VPOs and VPDs.

23. We also note that distinctions between the two statutory schemes support adoptions of a different regulatory approach in the IP context. In that regard, Verizon points out that, unlike the statutory provisions governing television closed captioning, the CVAA ''explicitly limits the video distributors and providers' responsibility to passing through the closed captions they receive from content owners.'' In other words, the

[20] We recognize that some of the above arguments may be premised on VPO copyright ownership, consistent with the VPO definition proposed in the *NPRM,* whereas we have decided to define a VPO based on its license to distribute programming to a VPD. Even if a VPO does not own the copyright to programming, however, we believe it will be in a better position than the VPD to determine whether the programming aired on television with captions and to obtain the rights necessary to add captions because it will be closer to the copyright owner than the VPD in the ''potentially complicated chain of copyright ownership.''

provisions governing television closed captioning allow the Commission to establish video programming distributor or provider responsibilities that encompass the actual provision of closed captioning, whereas the CVAA precludes imposing that direct responsibility.

24. We therefore disagree with commenters that argue that the Commission's proposals improperly allocate responsibility, and that the regulations should focus exclusively on the entity with the direct-to-consumer relationship rather than on the VPO. As discussed above, VPOs are better suited than VPDs to determine whether their programming has been shown on television with captions after the effective date, and VPOs more likely possess the rights necessary to caption their own content. Even if a VPO lacks the rights necessary to caption its content, by definition the VPO is higher up the distribution chain than the VPD, and thus is better positioned than the VPD to obtain required captions. We also disagree with MPAA and Time Warner that extending the existing television regime to the IP context is justified because it would be simpler. We believe that any benefit from such consistency is outweighed by the considerations set forth above, including the enforcement benefits of clearly defining the VPO as a single responsible person or entity. Further, we find unpersuasive MPAA's argument that a ''potentially complicated chain of copyright ownership'' mandates against direct regulation of VPOs. On the contrary, for the reasons above, we find that such complexity supports regulating VPOs directly in the IP context. We recognize that because the copyright ownership chain may be complicated, under some circumstances, the VPO as we have defined it may not possess captioning rights or be ideally positioned to determine whether programming it licenses is subject to the Act. Under such circumstances, however, we believe that the VPO is better positioned than the VPD to obtain required captions, and that it is necessary to impose captioning responsibility on a person or entity, rather than leaving a regulatory vacuum. As between the VPO and the VPD, we believe that the VPO—who owns the programming or is closer in the chain of custody to the owner—will be better positioned than the VPD to obtain the necessary rights and information and fulfill the responsibilities that we impose on VPOs, in particular providing captions, pursuant to our regulations.

25. Further, we reject commenters' arguments that imposing closed captioning obligations on content owners would raise First Amendment concerns. MPAA argues that regulating VPOs directly would represent a ''major shift from the existing captioning regime,'' impermissibly and unnecessarily target a new category of speakers, and impose a greater burden on content owners' speech than is necessary to ensure the deaf community has online access to television content. As an initial matter, closed captioning requirements implicate the First Amendment only marginally at best. The DC Circuit has rejected the argument that captioning requirements regulate program content in violation of protected rights under the First Amendment, finding that closed captioning ''would not significantly interfere with program content.'' [21] Indeed, because closed captioning involves a ''precise repetition of the spoken words'' communicated by the speaker, any First Amendment burden is only incidental.[22] The DC Circuit's explanation that closed captioning is a ''precise repetition'' is consistent with our definition of closed captioning as the visual display of the audio portion of video programming. Here, the captioning requirement is triggered only after the programming has been shown on television with closed captions. In addition, the record does not reflect that the total burden on all speakers associated with imposing responsibilities on VPOs would be any greater than the total burden on all speakers associated with regulating only providers and distributors. VPOs have no greater First Amendment right than VPDs to be free of captioning duties,[23] and some VPDs are already subject to broadcast television captioning requirements and have not objected to extension of such requirements to the IP context. The Commission would simply be allocating similar captioning burdens differently among video programming owners, distributors and providers in the IP context than in the traditional television context, in order to implement the statutory directives and objectives as described above. This allocation does not impermissibly burden VPOs' First Amendment rights.

26. *Video programming distributor or provider responsibilities.* We require VPDs to enable ''the rendering or pass through'' of all required captions to the end user, as proposed in the *NPRM.* In adopting this requirement, we note that it was generally unopposed in the record.[24] When a VPD initially receives a program with required captions for IP delivery, we will require the VPD to include those captions at the time it makes the program file available to end users.[25] Other than requiring a good faith use of the ''mechanism'' discussed below, we decline to impose specific obligations on VPDs to determine whether captions are required and to ensure that video programming has the required captions. Commenters express their objection to such additional obligations. We note, however, that the existence of an agreed-upon mechanism, discussed below, is not a defense for failure to enable the rendering or pass through of required captions to the end user if—at any time before or during the period in which the VPD made the video programming at issue available to end users through IP delivery—evidence shows that the VPD's reliance on the mechanism was not in good faith.

27. We find that as part of the VPDs' responsibilities under the Section 202(b) ''render or pass through'' obligation, they must ensure that any application, plug-in,[26] or device that they provide to the consumer is capable of rendering or passing through closed captions. In other words, if a VPD chooses to deploy an application, device, or plug-in to deliver video to consumers, the VPD must ensure that captions can actually be displayed on the screen—whether by causing the text to appear or by passing the text through to another component on the device that will accept and

[21] *Gottfried* v. *FCC,* 655 F.2d 297, 311 n. 54 (1981), *rev'd in part,* 459 U.S. 498 (1983) (Supreme Court did not disturb dictum of D.C. Circuit suggesting the constitutionality of closed captioning regulations). *See also MPAA* v. *FCC,* 309 F.3d 796, 803 (D.C. Cir. 2002).

[22] *MPAA* v. *FCC,* 309 F.3d 796, 803 (D.C. Cir. 2002) (noting a key difference for First Amendment purposes between video description (which regulates video content) and closed captioning (which involves a precise repetition of the spoken words)).

[23] *See Turner Broadcasting Systems, Inc.* v. *FCC,* 512 U.S. 622, 636 (1994) (''There can be no disagreement on an initial premise: Cable programmers and cable operators engage in and transmit speech, and they are entitled to the protection of the speech and press provisions of the First Amendment. Through 'original programming or by exercising editorial discretion over which stations or programs to include in its repertoire,' cable programmers and operators 'see[k] to communicate messages on a wide variety of topics and in a wide variety of formats' '').

[24] We note that, as discussed in Section III.A.1 above, we rejected the proposals of a few commenters that we should impose separate responsibilities for VPDs and for VPPs, based on the different definitions of the terms that they advocated.

[25] This time frame is different for archival programming, as discussed below.

[26] A ''plug-in'' is defined as ''[a] program of data that enhances, or adds to, the operation of a (usually larger) parent program.'' *See* H. Newton, *Newton's Telecom Dictionary* 642 (20th ed. 2004).

display that text.[27] This includes making the captioning readily available to users, because if users cannot turn on the captioning and otherwise control the captions, the rendering or passing through of captions will be meaningless. We find that this is a reasonable and necessary interpretation of the requirement that a VPD must enable ''the rendering or pass through of closed captions,'' because otherwise captions of video programming that VPDs render or pass through via their associated applications or hardware may not be viewable by end users. Our interpretation of the ''render or pass through'' obligation is consistent with how our existing closed captioning rules operate. Thus, interpreting the ''render or pass through'' obligation in this way is consistent with Commission precedent. We note that this approach also is consistent with the Commission's approach in the *ACS Order* that, if a provider of advanced communications services makes software available to provide covered services, the provision of that software is subject to the applicable requirements.[28] Importantly, just as the Commission found in the *ACS Order* that an advanced communications service provider or equipment manufacturer is not responsible for third-party applications and services, we find that a VPD is also not responsible for third-party services and applications. This means that if a consumer downloads software from a third party entity not affiliated with or used by the VPD in the delivery of its programming, and the consumer uses that software to access content provided by the VPD, the VPD is not responsible for ensuring closed captioning support in that application. We note, however, that where a VPD requires a consumer to download software or software upgrades from a third party, and the consumer could not otherwise view closed captioning on video programming for which the VPD bears a closed captioning obligation, the VPD is responsible for ensuring the accessibility of such software or software upgrades. Finally, as part of its obligation to enable the rendering or pass through of closed captions, a VPD providing an application, plug-in, or device to consumers in order to deliver video programming must ensure that the application, plug-in, or device complies with the requirements discussed below related to interconnection mechanisms (to the extent the VPD supplies the consumer covered devices under Section 203) and display of captions.

28. *Mechanism for information on video programming subject to the CVAA.* Having set forth the allocation of responsibilities between VPDs and VPOs, we turn to the ''mechanism'' that the Commission must establish to make available to VPDs information on video programming that must be captioned when delivered via IP. The CVAA requires that the Commission's implementing regulations ''(v) shall establish a mechanism to make available to video programming providers and distributors information on video programming subject to the Act on an ongoing basis,'' and ''(vi) shall consider that the video programming provider or distributor shall be deemed in compliance if such entity * * * makes a good faith effort to identify video programming subject to the Act using the mechanism created in (v).'' Without the good faith use of such a ''mechanism,'' the Senate Committee Report explained that a VPD that is not also an MVPD may face difficulty in determining whether a particular program was shown on television with captions after the effective date of the new rules. As explained below, we will require each VPO and each VPD to which the VPO has provided or will provide video programming for IP delivery to agree upon a ''mechanism'' that will inform the VPD of which programming is subject to the IP closed captioning requirements on an ongoing basis. The ''mechanism'' must provide adequate information to enable the VPD to identify programming subject to the IP closed captioning requirements on an ongoing basis.

29. We interpret the word ''mechanism'' to mean any process, method or system agreed upon between a VPO and a VPD that makes available to the VPD sufficient information to determine whether captioning is required of programming that it receives from the VPO and makes available directly to end users through a distribution method that uses IP. This interpretation is consistent with the statutory language, history, and purpose, and will provide maximum flexibility to VPOs and VPDs to comply with the CVAA's requirements. The CVAA does not define the term ''mechanism.'' A common meaning of the term, however, is ''a process or technique for achieving a result.''[29] Assigning the term its common meaning in the CVAA is consistent with the legislative purpose and history. In that regard, the CVAA requires a ''mechanism'' so that VPOs will make information available to VPDs regarding whether IP-delivered programming is subject to the captioning requirements in recognition of the difficulties VPDs otherwise might face in obtaining such information. In addition, the statute requires that VPDs be ''deemed in compliance'' when they make a good faith effort to identify programming subject to the captioning requirements using the mechanism. Although the statutory reference to ''a'' mechanism might suggest that Congress contemplated a single method for making information available to VPDs, we find no support in the legislative history for such an interpretation, and nothing in the statutory scheme requires such a narrow interpretation. On the contrary, the broad interpretation we adopt will better serve the statutory purpose of maximizing the accessibility of IP-delivered video programming by providing flexibility for VPOs and VPDs to agree on processes or methods tailored to their needs, as well as by ''encourag[ing] the development of technology to accurately identify video programming subject to this section.''[30]

30. Our broad interpretation of the statutory term ''mechanism'' also is justified by our examination of the record in this proceeding, which reflects sharply differing views as to whether a particular ''mechanism'' would work best, supporting our conclusion that one size may not fit all. While some

[27] For example, if a VPD provides an application that consumers can download onto their smartphones to view the VPD's programming, then the application must be capable of rendering or passing through closed captions. Likewise, if a VPD provides a device, such as a set-top box, to view the VPD's programming, that device must be capable of rendering or passing through closed captions. Additionally, if the VPD delivers its programming through a Web site, it must design its Web site to permit the user to enable the display of closed captions. Where the VPD passes the text through to another component on a physical device over which the VPD has no control, then the manufacturer of that device will have separate obligations to ensure the capability to display such captions under Section 203 of the CVAA. See *infra* Section IV. We note that if the VPD is reasonably relying on the captioning display functionality in a device over which it has no control to display captions, the VPD has no liability to the extent that the captioning functionality on the device fails or operates improperly. We also note that to the extent that the VPD believes that it would be economically burdensome for it to comply with this requirement in a specific instance, it may petition us accordingly.

[28] *See Implementation of Sections 716 and 717 of the Communications Act of 1934, as Enacted by the Twenty-First Century Communications and Video Accessibility Act of 2010,* 26 FCC Rcd 14557, 14591 at para. 86 (2011) (''*ACS Order*'').

[29] *See* Webster's New Collegiate Dictionary 737 (9th Ed. 1989).

[30] *See* Senate Committee Report at 14. Rather than limiting the definition of the statutorily-required mechanism to a specific process or method, we believe that our approach will enhance economic incentives for the development of technology, For example, under our rules, entities may choose to rely on a commercially available third-party database (to the extent one is developed) that accurately identifies video programming subject to the CVAA.

commenters are amenable to the system of certifications proposed in the *NPRM,* others argue that the proposed certification mechanism would be unworkable and unduly burdensome. Some commenters favor allowing a VPD to monitor a third-party database, and still others support leaving the choice for the parties to resolve by private contract. We believe that the broad interpretation we adopt, by permitting the parties to select the ''mechanism'' that is most suitable for them, will provide needed flexibility to VPOs and VPDs while ensuring that VPDs will be able to obtain the information necessary to determine when a program must be provided with captions.

31. We will require each VPO and each VPD to which the VPO has provided or will provide video programming for IP delivery to agree upon a ''mechanism'' that will inform the VPD of which programming is subject to the IP closed captioning requirements on an ongoing basis.[31] This obligation will apply to programming that VPOs newly provide VPDs for IP delivery, as well as to programming that VPOs provided VPDs for IP delivery previously if it remains available to consumers, as explained below. Any mechanism agreed upon by a VPO and VPD must provide adequate information to enable the VPD to identify programming subject to the IP closed captioning requirements on an ongoing basis, consistent with the definition of ''mechanism'' that we adopt here. A VPD cannot rely in ''good faith'' on a mechanism that fails to provide adequate information for it to identify programming subject to the Act, and a VPD that does rely on such a mechanism despite its inadequacy will not be ''deemed in compliance'' within the meaning of Section 202(b) of the CVAA. If the parties agree upon a mechanism that involves certifications, they have the flexibility to determine whether certifications should apply to specific programming or whether to use a more general certification, for example, by addressing in a certification all programming covered by a particular contract. That is, we impose no requirement on the parties that the certifications apply on a program-by-program basis or include a program-specific explanation as to whether captions are, or are not, required.

32. In the *NPRM,* the Commission proposed ''to require VPOs providing video programming to VPDs for IP delivery to provide each program either with captions simultaneously, or with a dated certification stating that captions are not required for a reason stated in the certification.'' Because we have decided to afford parties flexibility in choosing a mechanism, we decline to adopt a certification requirement. In the interest of providing certainty to those VPDs that may choose to use certification as the method of determining whether captioning is required, however, we declare that VPDs may rely in good faith on certifications, as long as they meet certain requirements. First, to the extent that a VPD relies on a certification by a VPO that the subject programming need not be captioned, such certification must include a clear and concise explanation of why captioning is not required. We believe that such an explanation is necessary to enable a VPD to rely on the certification in good faith, as it will enable the VPD to review the VPO's reasoning and evaluate whether the VPD may rely on the certification. Second, in order to rely on a certification in the event of a complaint, VPDs must be able to produce it to the Commission. Thus, VPDs should retain any certifications on which they may need to rely until one year after they cease making the subject programming available to end users via IP delivery. If these requirements are met, VPDs may rely in good faith on such certifications for purposes of the ''deemed in compliance'' provision of the statute. In other words, when faced with a complaint, VPDs relying upon certifications need not prove that the mechanism they chose was adequate. In addition, if VPDs wish to obtain Commission determinations that other proposed mechanisms provide adequate information for them to be able to rely on the mechanisms in good faith for purposes of the ''deemed in compliance'' provision, they may seek such a determination by filing an informal request, and providing sufficient information for the Commission to determine whether the proposed mechanism would provide the VPD with adequate information for it to identify programming subject to the Act.[32]

33. We note that an uncaptioned, archival IP-delivered program that is not subject to the IP closed captioning requirements as of the effective date of the new rules may later become subject to the requirements, once it is shown on television with captions after the effective date. In the *NPRM,* the Commission proposed that VPOs be required to provide VPDs with updated certifications as to the captioning status of a previously delivered program (and a caption file, if not previously provided) within seven days of the program becoming subject to the IP closed captioning requirements, and that VPDs be required to make required captions available to end users within five days of the receipt of an updated certification. We decline to adopt this proposal in light of our decision to provide flexibility for VPOs and VPDs to agree to different mechanisms to enable VPDs to identify programming subject to the CVAA. We emphasize, however, that VPOs must provide updated information to VPDs concerning uncaptioned, archival IP-delivered programs pursuant to whatever ''mechanism'' they agree to use in order for VPDs to be able to rely on that mechanism in good faith, subject to the deadlines discussed below. For example, if the mechanism that a VPD and a VPO agree to use involves certifications, the VPO would have to provide the VPD with an updated certification to inform the VPD that a program in the VPD's library has been shown on television with captions after the applicable compliance deadline.

34. Based on examination of the record, we conclude that VPOs and VPDs must be provided with a reasonable period of time to develop processes or methods of addressing uncaptioned, archival IP-delivered content that is shown on television with captions after the effective date of the new rules. The record reflects that no process or method presently exists to enable VPOs to accurately identify such content, and that the task of developing one is likely to be complex. The record also reflects that the ''costs and complexities involved in taking down a program already online and adding captions to it'' would make compliance with our proposed seven- and five-day deadlines impossible at present. Accordingly, for a period of two years after this *Report and Order* is published in the **Federal Register**, we will not require captioning of uncaptioned, archival IP-delivered programming that is already in the VPD's library before it is shown on television with captions. We believe that two years will provide a reasonable period of time for VPDs to develop and implement a process to address such content. For such programming that is already in a VPD's library and is shown on television with

[31] Should a captioning problem occur where the VPD and VPO have failed to agree upon an adequate mechanism, the Commission may hold both parties responsible.

[32] *See* 47 CFR 1.41. Parties filing any request pursuant to the rules we adopt here may seek confidential treatment of information submitted with their request pursuant to the Commission's confidentiality rules. *See* 47 CFR 0.459.

captions on or after the date two years from **Federal Register** publication, the VPD must update its program file to enable the rendering or pass through of closed captions within 45 days of the program being shown on television with captions.[33] We believe that 45 days will provide sufficient time for VPDs to update program files to enable the rendering or pass through of closed captions, given that VPDs and VPOs will have two years to develop methods of complying with the 45-day deadline.[34] We further note that 45 days is significantly longer than the objected-to *NPRM* proposal.[35] We expect that, with the passage of time, parties will have established a better functioning mechanism for the update of archival content. Given this, we require that for programming that is already in a VPD's library and is shown on television with captions on or after the date three years from **Federal Register** publication, the VPD must update its program file to enable the rendering or pass through of closed captions within 30 days of the program being shown on television with captions. Further, we require that for programming that is already in a VPD's library and is shown on television with captions on or after the date four years from **Federal Register** publication, the VPD must update its program file to enable the rendering or pass through of closed captions within 15 days of the program being shown on television with captions. We expect that by four years after **Federal Register** publication, 15 days will be sufficient for VPDs to caption any archival content that remains uncaptioned.[36]

35. We reject the arguments of some commenters that our IP closed captioning rules should not apply to programming that is available from a VPD before it is shown on television with captions. Section 202(b) of the CVAA requires the Commission to ''revise its regulations to require the provision of closed captioning on video programming delivered using Internet protocol that was published or exhibited on television with captions after the effective date of such regulations.'' Some commenters maintain that the statute does not cover content delivered to the VPD and posted online prior to the effective date of the regulations, seemingly reading the term ''delivered'' in Section 202(b) to refer to the time of the VPO's delivery of content to the VPD rather than the time of publication or exhibition on television with captions. These commenters argue that requiring updates of such programming to include closed captions would be inconsistent with Congress's intent to apply the requirements prospectively only. We disagree. We interpret Section 202(b) to cover any programming delivered to consumers using IP, provided that the programming was published or exhibited on television with captions after the effective date of the regulations. We believe that this interpretation is consistent with the language, history, and purpose of the statute. The statutory phrase ''after the effective date of such regulations'' does not modify ''programming delivered using Internet protocol''; rather, it modifies the phrase ''published or exhibited on television with captions.'' Thus, whether the VPO delivered the programming to the VPD before or after the effective date of the regulations is irrelevant to whether the programming is covered by the statute. While the legislative history of the CVAA indicates Congress's intent ''to apply the captioning requirement only prospectively,'' we believe that our reading is consistent with that intent: under our reading, captioning requirements do not apply to IP-delivered programming unless and until the programming is published or exhibited on television with captions after the effective date of our regulations. Our reading is also consistent with the statutory purpose of maximizing the availability of closed captions, whereas the reading advocated by some commenters would remove a significant amount of captioned television programming from the scope of the CVAA based upon whether a particular program happened to be in a VPD's archive before it was shown on television with captions. Accordingly, we do not see any statutory basis for exempting the existing IP-delivered programming from the IP closed captioning requirements as some commenters request.

3. Quality of IP-Delivered Video Programming

36. The CVAA authorizes the Commission to impose requirements on the quality of video programming provided by VPOs for IP delivery, and on the quality of IP-delivered video programming that VPDs make available directly to end users.[37] The VPAAC recommended that the consumer experience with captions of IP-delivered video programming should be ''equal to, if not better than,'' the television experience, and it specifically proposed the consideration of such factors as completeness, placement, accuracy, and timing in making this determination. The *NPRM* proposed to require captions to be of at least the same quality as the television captions for the programming, and that an evaluation of ''quality'' includes the consideration of such factors as completeness, placement, accuracy, and timing. While some commenters support the proposed quality standards, others express concern that such a requirement could make VPOs or VPDs responsible for factors that affect caption quality but are outside of their control, such as broadband connection speeds or the constraints of a particular apparatus.

37. We will require VPOs to provide VPDs with captions of at least the same quality as the television captions provided for that programming. We will also require VPDs to maintain (*i.e.,* not degrade) the quality of the captions provided by VPOs in enabling the rendering or pass through of captions, and to transmit captions in a format reasonably designed to reach the end user in that quality. In evaluating whether the captions are of at least the same quality, the Commission will consider such factors as completeness, placement, accuracy, and timing.[38] At the same time, recognizing the complex chain of video programming delivery from the VPO to the consumer, we will not hold VPDs or VPOs responsible for quality issues outside of their control such as broadband connection speeds or the constraints of a particular apparatus. This slight modification of the quality requirements proposed in the *NPRM* focuses on the quality of the captions that VPOs send, and on the quality of the captions that VPDs render or pass through, and is designed to address the

[33] Uncaptioned, archival programming will not be subject to the IP closed captioning requirements unless and until it is shown on television with captions on or after the two-year deadline. For the reasons discussed above, VPOs and VPDs will need two years to develop processes or methods of addressing such programming, and before such processes or methods are in place we do not believe it is reasonable to require them to keep track of whether such programming is shown on television with captions.

[34] Although we give VPOs and VPDs two years to develop a process for captioning archival content that is subject to the CVAA, we note that nothing in the statute precludes the VPO, during this period, from providing captions to the VPD for the archival content posted in the VPD's library.

[35] The lengthy compliance deadline adopted herein for programming already in a VPD's library is consistent with NCTA's request for a separate category in the schedule of deadlines for reruns.

[36] The Commission may reconsider the time frames set forth in this paragraph upon a showing that VPOs and VPDs are incapable of compliance within these time frames.

[37] *See* 47 U.S.C. 613(c)(2)(D)(iv) (authorizing the Commission to ''describe the responsibilities of video programming providers or distributors and video programming owners'').

[38] As we gain experience with the application of these rules, we may revisit the issue.

concern raised by commenters that VPDs and VPOs may be held responsible for variations in quality caused by outside factors. It also mitigates the concerns raised by certain commenters that quality requirements could be subjective and time-consuming because the quality standard is based on the objective quality characteristics of the actual closed captions used for the televised version of the programming, which are readily apparent. We reject commenters' argument that regulation of caption quality would raise First Amendment concerns. As explained above, the quality standards we adopt here are based upon the quality of the television captions provided for that programming. Thus, our quality standards impose no greater burden than our television closed captioning requirements, which the DC Circuit has already suggested are constitutional. We do not expect that this quality requirement will create disincentives to making video programming available online, since it merely requires VPOs to provide captions comparable to those available for television distribution. Although some commenters suggest that a decision to impose quality standards here would be inconsistent with the lack of television closed captioning quality standards, in fact, the Commission has a proceeding pending on the caption quality of television programming.[39] Further, the IP closed captioning regime differs from the television closed captioning regime since the television closed captioning rules require that captions be created in the first instance, whereas in the IP context, captions are only required for IP-delivered video programming that has already been published or exhibited on television with captions. We believe that quality standards are appropriate in the IP context to prevent VPOs or VPDs from degrading the quality of the captions that actually appeared on television when the same programming is distributed with captions via IP. The record provides no basis for concluding that it is unreasonable to expect VPOs and VPDs to at least maintain the same quality with respect to programming distributed via IP, since we will not hold VPOs and VPDs responsible for quality effects that result from outside factors. To the extent any VPO or VPD believes that the quality requirement is economically burdensome, it may file an exemption petition.

38. We are not persuaded that any of the alternate approaches to caption quality proposed by commenters would be preferable to the approach adopted herein. Specifically, CEA proposes the adoption of ''specific minimum technical requirements * * * if achievable,'' which proposal focuses improperly on the ''achievability'' language of Section 203 of the CVAA rather than on regulations specific to VPOs and VPDs pursuant to Section 202 of the CVAA. Other commenters also propose a ''functional equivalence'' quality standard, which Microsoft describes as having a focus on ''[e]ssential equality in function rather than exact equality with respect to all the features and capabilities.'' We find that such an approach is amorphous and does not offer any benefits not provided by the quality standard adopted herein.

39. We encourage VPDs to improve caption quality to enhance accessibility, if doing so is not constrained or prohibited by copyright law or private agreement. AT&T expresses concern that ''[e]ncouraging VPPs/VPDs to edit captions could create inconsistencies in the quality of programming from one medium to another,'' which is not an issue when the VPO handles edits for all media simultaneously. In the *NPRM,* the Commission explained that it did not intend to *require* VPDs to improve caption quality, but rather, to allow them to do so if they had any necessary permission. Some commenters express the view that copyright concerns should not prevent a VPD from improving caption quality. Some commenters argue that improving caption quality for an IP-delivered video program would be a non-infringing fair use of the video under copyright law. In contrast, other commenters assert that copyright law generally would prevent a VPD from improving caption quality. We see no need to determine in this proceeding whether a VPD may, consistent with copyright law, improve caption quality without the consent of a VPO. We expect that VPOs and VPDs will typically agree through their contractual negotiations about the appropriate extent, if any, of VPD improvement to a VPO's caption file.[40]

4. Video Programming Subject to Section 202(b)

40. In the paragraphs below, we define the types of programming that are subject to the IP closed captioning rules. We generally adopt the definitions proposed in the *NPRM* but modify some of them, as discussed below. As proposed in the *NPRM,* we also limit our rules to programming aired with captions on television in the United States.

41. *Video programming.* We adopt the *NPRM's* proposal to codify the CVAA's definition of ''video programming'' in our rules. Section 202(a) of the CVAA defines ''video programming'' as ''programming by, or generally considered comparable to programming provided by a television broadcast station, but not including consumer-generated media (as defined in section 3).''[41] The Senate and House Committee Reports did not elaborate on the term ''video programming,'' and commenters generally did not further explore the meaning of the term. We agree with the suggestion by Consumer Groups that programming ''that was published or exhibited on television'' by definition constitutes ''video programming,'' since anything that was published or exhibited on television must be provided by, or be comparable to programming provided by, a television broadcast station.[42]

42. *Consumer-generated media.* We also adopt the *NPRM's* proposal to codify the CVAA's definition of ''consumer-generated media'' in our rules. Section 3 of the Act, as revised by the CVAA, defines ''consumer-generated media'' as ''content created and made available by consumers to online Web sites and services on the Internet, including video, audio, and multimedia content.'' The Senate and House Committee Reports did not elaborate on the definition, but certain commenters made proposals concerning the proper scope of ''consumer-generated media'' with regard to the new IP closed

[39] *See Closed Captioning of Video Programming, Telecommunications for the Deaf, Inc. Petition for Rulemaking,* FCC 05–142, 70 FR 56150, Sept. 26, 2005 (issued in response to a Petition for Rulemaking filed by the TDI Coalition on July 23, 2004). *See also Consumer & Governmental Affairs Bureau Seeks to Refresh the Record on Notices of Proposed Rulemaking Regarding Closed Captioning Rules,* DA 10–2050, 75 FR 70168, Nov. 17, 2010.

[40] In the *NPRM,* the Commission contemplated that a requirement for captions of IP-delivered video programming to be of at least the same quality as captions of television programming would require IP-delivered captions to include the same user tools, such as the ability to change caption font and size. We believe that the issue of user tools is better suited to our discussion of requirements for devices subject to Section 203 of the CVAA than the present discussion of requirements for VPOs and VPDs pursuant to Section 202(b) of the CVAA.

[41] 47 U.S.C. 613(h)(2). This definition of ''video programming'' is almost identical to the definition set forth in Section 602(20) of the Act. *See* 47 U.S.C. 522(20) (defining ''video programming'' as ''programming provided by, or generally considered comparable to programming provided by, a television broadcast station'').

[42] The Act and our rules establish that programming aired by MVPDs is ''video programming.'' *See, e.g.,* 47 U.S.C. 522(13) (an MVPD ''makes available for purchase * * * multiple channels of video programming''); 47 CFR 76.5(a) (cable television system is ''designed to provide cable service which includes video programming''); *id.* 76.1000(e) (defining MVPD as an entity that makes available for purchase multiple channels of video programming).

captioning requirements. We agree with Consumer Groups that, when consumer-generated content is shown on television as part of a captioned full-length program which a VPD then distributes over the Internet, the Internet version of the captioned full-length program must include captions. We conclude that in such a circumstance, the captioned full-length program does not constitute ''consumer-generated media'' merely because it includes certain content that was originally consumer-generated; rather, pursuant to the CVAA, captioning is required when the full-length program is delivered via IP because it is ''video programming delivered using Internet protocol that was published or exhibited on television with captions after the effective date of such regulations.'' For example, if a consumer creates a video and makes it available on YouTube, and that video is then shown with captions as part of a news broadcast on television, then that full-length news broadcast (which includes the consumer-generated video) must include captions when a VPD distributes it via IP. We also agree with commenters who propose that ''consumer-generated media'' for these purposes should include content that is made available online by individual consumers without the consent of a VPO that has rights in the content, since in such situations VPOs do not maintain control over the programming and caption file, and VPDs do not maintain control over the distribution of the programming directly to the end user. Thus, it is not reasonable to expect VPOs and VPDs to bear any obligations for captioning content made available online by individual consumers without the necessary consent.

43. Players embedded in a Web site present a different situation. When a VPD makes full-length video programming available to consumers to redistribute through a player embedded in a Web site, the player is controlled by the VPD, even though it appears as if it is playing video on the Web site through which the consumer redistributes it, such as a blog or a social networking Web site. When a VPD makes full-length video programming available to consumers to redistribute through such a player, the video programming is not consumer-generated media and the VPD must ensure that the player displays required captions pursuant to its ''pass through or render'' obligations discussed in paragraph 27 above.

44. *Full-length programming.* The *NPRM* proposed to define ''full length programming'' as ''video programming that is not video clips or outtakes.'' Consistent with our proposal in the *NPRM,* that the captioning requirements of Section 202(b) apply to full-length programming, and not to video clips or outtakes, we adopt the proposed definition with a slight modification to make our rules more clear. Specifically, we define ''full-length video programming'' as video programming that appears on television and is distributed to end users, substantially in its entirety, via IP. This definition thereby excludes video clips or outtakes of the video programming that appeared on television. We find that this decision is supported by commenters. Through the inclusion of ''substantially in its entirety,'' we mean to reference video programming that is distributed via IP as a complete video programming presentation, such as an episode of a television show or a movie. At the same time, as explained below, when substantially all of a full-length program is available via IP, we will not consider that program to be a ''clip,'' but rather, a ''full-length program'' subject to the IP closed captioning requirements.

45. We define ''video clips'' as excerpts of full-length video programming, consistent with the proposals of some commenters. We believe that this definition is consistent with what consumers commonly think of as ''video clips.'' When substantially all of a full-length program is available via IP, we will not consider that program to be a ''clip,'' but rather, a ''full-length program'' subject to the IP closed captioning requirements. For example, an entity covered by our new rules would not be permitted simply to shave off a few minutes (or brief segments) from a full-length half hour program just to avoid fulfilling its captioning obligations. Our decision that substantially all of a full-length program does not constitute a ''clip'' is consistent with congressional intent to increase the accessibility of video programming to individuals who are deaf or hard of hearing. We also agree with members of the industry and consumer groups that a full-length program posted online in multiple segments, to enable consumers to more readily access a particular segment of the program, constitutes full-length programming and will have to be captioned under our new rules. Thus, for example, a VPD that divides a program into various segments for easy viewing and posts the segments on the Internet would still have to ensure the pass through or rendering of the captions for each of these segments. Individuals should not be denied access to captioned IP-delivered programming because it is available online only in segmented format.

46. We note that in the *NPRM,* the Commission had proposed to define ''video clips'' as ''small'' sections of a larger video programming presentation, consistent with the *Comcast-NBCU Order.* We now reject that approach. The word ''small'' in the proposed definition of ''video clips'' could inadvertently create a class of programming that is neither a ''video clip'' nor a ''full-length program,'' because a particular clip may not be ''small'' but also may not be a full-length video program. We believe that the definition of ''video clips'' adopted herein addresses that concern because it eliminates any need to evaluate whether a particular video clip constitutes a *small* section of a larger video programming presentation. Further, we encourage VPOs and VPDs to provide closed captions for IP-delivered video clips where they are able to do so. We emphasize that, ''if there is clear evidence that an entity has developed a pattern of attempting to use video clips to evade its captioning obligations,'' we may find a violation of our rules.

47. We reject proposals that the Commission limit the definition of ''video clips'' to promotional materials that do not exceed a certain duration or fraction of the program. There is no evidence in the CVAA or its legislative history that Congress intended to exclude ''video clips'' only if they are promotional in nature, and we do not see any evidence that Congress sought to exclude only clips of a certain duration or percentage of the full-length program.[43]

48. Finally, we emphasize that the legislative history states that Congress ''intends, *at this time,* for the regulations to apply to full-length programming and not to video clips or outtakes.'' We believe that this legislative language, which references the present time only, signals Congress's intent to leave open the extent to which such programming should be covered under this section at some point in the future. Accordingly, we may determine, at a later time, that congressional intent ''to help ensure that individuals with disabilities are able to * * * better access video programming'' may warrant applying these captioning requirements beyond

[43] We also reject the proposal of Consumer Groups that ''video clips'' must be no longer than 30 seconds in duration, and the proposal of DIRECTV that video clips must not exceed one quarter of the program's overall length, as Consumer Groups and DIRECTV fail to justify the strained readings of the terms ''video clips'' and ''full-length programming'' on which their proposals rely.

full-length programming, by for example including video clips within the captioning requirements or defining the term more narrowly. It is particularly important that news content, which plays the vital role of ensuring an informed citizenry, be made accessible to all citizens. As Representative Markey and Senator Pryor recognize, ''Americans increasingly are accessing online news, information and entertainment in * * * segments * * *.'' We therefore encourage the industry to make captions available on all TV news programming that is made available online, even if it is made available through the use of video clips as defined above. If we find that consumers who are deaf or hard of hearing are not getting access to critical areas of programming, such as news, because of the way the programming is posted (*e.g.,* through selected segments rather than full-length programs), we may reconsider this issue to ensure that our rules meet Congress's intent to bring captioning access to individuals viewing IP-delivered programming.

49. We adopt the definition of ''outtakes'' that the Commission proposed in the *NPRM.* The Commission proposed to define ''outtakes'' as content that is not used in an edited version of video programming shown on television. Of the few commenters that discuss this proposed definition, all express their support. We agree with Consumer Groups that ''bloopers'' and other incidental material shown on television with captions do not fall within the definition of ''outtakes'' prescribed herein, when such content is, in fact, used in an edited version of video programming shown on television.

50. *Foreign programming.* We affirm the *NPRM's* tentative conclusion that the CVAA requires closed captioning of IP-delivered video programming that was published or exhibited on television in the United States with captions after the effective date of the regulations. The Commission stated in the *NPRM* that the best reading of the CVAA seemed to be that closed captioning is required on IP-delivered video programming that was published or exhibited on television *in this country* with captions after the effective date of the regulations. Industry commenters generally agree with the Commission that programming that has been shown on television with captions only in another country should not be subject to the new requirements for IP closed captioning. Consumer Groups argue, however, that the IP closed captioning requirements should apply to programming that is shown on television in another country with captions after the effective date of the new rules, because ''the CVAA's captioning requirements contain no textual limitation on programming published or exhibited on television in other countries,'' and because ''Consumer Groups see no tenable rationale for excluding the broad range of foreign programming that is available via Internet distribution in the United States.'' We disagree. Although the text of the CVAA does not explicitly exclude from coverage programming shown only in another country, we conclude that Congress did not intend to reach such programming through the CVAA, which commenters have explained could create many difficulties, such as the need to reconcile different captioning requirements applicable in different countries and monitor foreign television broadcasts. Had Congress intended to create such a broad range of issues, such as those that would arise with programming shown in a foreign country, it would have said so expressly. Moreover, examination of the record reflects that there are sound reasons for excluding foreign television programming from the scope of the CVAA.

B. Compliance Deadlines

51. Section 202(b) of the CVAA requires the Commission's regulations for closed captioning of IP-delivered video programming to ''include an appropriate schedule of deadlines for the provision of closed captioning, taking into account whether such programming is prerecorded and edited for Internet distribution, or whether such programming is live or near-live and not edited for Internet distribution.'' We adopt the proposal from the *NPRM* to implement the schedule of compliance deadlines set forth by the VPAAC, which is as follows: (1) For programming that is prerecorded and not edited for Internet distribution, a compliance deadline of six months after the rules are published in the **Federal Register;** (2) for programming that is live or near-live, a compliance deadline of 12 months after the rules are published in the **Federal Register;** and (3) for programming that is prerecorded and edited for Internet distribution, a compliance deadline of 18 months after the rules are published in the **Federal Register.** Having reviewed the record, we conclude that adoption of the schedule of compliance deadlines proposed in the *NPRM* will provide the industry with a sufficient time frame within which to develop processes or methods for addressing such programming, and will provide consumers with access to accessible programming in the near future. We reiterate that the schedule of deadlines proposed in the *NPRM* was agreed on by the VPAAC, which includes representatives from industries that will be subject to our new rules, as well as consumer groups that have a strong interest in ensuring that our rules are implemented as quickly as possible. Based on our review of the record, we conclude that compliance deadlines of six, 12, and 18 months after **Federal Register** publication are reasonable in light of the varying degrees of difficulty involved in closed captioning of IP-delivered prerecorded and unedited, live or near-live, and prerecorded edited video programming. The compliance deadlines are applicable only to initial compliance with the rules.[44] Once a deadline has been reached for a particular category of programming, that content must be captioned immediately when delivered via IP, with the exception of updates to content already in a VPD's library.[45] Once the applicable deadline has been reached for a certain program, VPOs and VPDs must fulfill their responsibilities to ensure that the program has captions when delivered to end users via IP.

52. Opponents of the compliance deadlines adopted herein have not demonstrated that the deadlines would be problematic on an industry-wide basis. We find that the lengthier deadlines proposed by some commenters are not justified because of support for the proposed deadlines in the record and by the VPAAC, which demonstrates that the proposed deadlines appear to be achievable on an industry-wide basis. Further, we note that entities that find it economically

[44] Programming will not be subject to the IP closed captioning requirements unless and until it is shown on television with captions on or after the deadlines established here. Our choice of compliance deadlines recognizes that VPOs and VPDs will need to use the time between publication of our rules in the **Federal Register** and the compliance deadlines to develop processes or methods of addressing such programming. Before such processes or methods are in place we do not believe it is reasonable to require them to keep track of whether such programming is shown on television with captions. This approach is consistent with the CVAA's mandate that we include ''an appropriate schedule of deadlines for the provision of closed captioning.'' 47 U.S.C. 613(c)(2)(B).

[45] For such updated content, the captioning requirement will not be triggered for a period of two years from the date of **Federal Register** publication, as discussed above, and at that point we will impose a 45-day deadline from the date on which the programming is shown on television. Beginning three years from the date of the **Federal Register** publication, this deadline will be reduced to 30 days, and beginning four years from the date of the **Federal Register** publication, this deadline will be reduced to 15 days.

burdensome to meet the deadlines may petition for an exemption. The CVAA directs us, in adopting a schedule of deadlines, to ''tak[e] into account whether such programming is prerecorded and edited for Internet distribution, or whether such programming is live or near-live and not edited for Internet distribution. '' Thus, by adopting multiple deadlines for different types of programming, the schedule of deadlines adopted herein takes into account the concerns that Congress directed the Commission to consider. We encourage VPOs and VPDs to make captioned programming available in advance of the applicable deadlines, to the extent they are able to do so.

53. As we discuss above, VPDs that provide applications, plug-ins, or devices to consumers have an obligation under Section 202 to ensure that those applications, plug-ins, or devices render or pass through closed captions to subscribers. In many cases, compliance with this obligation would require the VPD to design consumer devices or software running on such devices to render or pass through closed captions. If a VPD uses software to enable the rendering or pass through of captions, the VPD is responsible only for software it deploys after the applicable compliance dates discussed in paragraph 51 above. We believe this limitation is warranted as we do not believe it is appropriate to require VPDs to provide new versions of software if the VPD did not otherwise intend to do so.[46] If a VPD relies on hardware to enable the rendering or pass through of closed captions, the VPD must meet the compliance deadline of January 1, 2014. We believe this time period is appropriate because it is consistent with our analysis under Section 203.[47] We note that, while the achievability standard of Section 203 of the CVAA does not apply to Section 202, VPDs that find it economically burdensome to meet their obligations may file an exemption petition, as discussed below.[48]

54. The CVAA also requires the Commission's regulations to ''contain a definition of 'near-live programming' and 'edited for Internet distribution.''' In the *NPRM* the Commission sought comment on definitions of ''live programming,'' ''near-live programming,'' ''prerecorded programming,'' and ''edited for Internet distribution.'' We explain below how we have defined these terms. The Commission proposed to apply these definitions solely to rules applicable to IP closed captioning pursuant to the CVAA. We conclude that the definitions we adopt herein for the terms ''live programming,'' ''near-live programming,'' ''prerecorded programming,'' and ''edited for Internet distribution'' apply solely to our regulation of IP closed captioning, as explained further below.

55. *Live Programming.* We adopt the definition of ''live programming'' proposed in the *NPRM.* The Commission proposed to define ''live programming'' as video programming that is shown on television substantially simultaneously with its performance. This definition is comparable to the definition of ''live programming'' adopted in the recent *Video Description Order,* which was ''programming aired substantially simultaneously with its performance,''[49] with a slight modification to clarify that in the IP closed captioning context, the performance occurs substantially simultaneously to its airing on television, not necessarily to the IP distribution. The Commission explained in the *NPRM* that the phrase ''substantially simultaneously'' contemplates that live programming may include a slight delay when it is shown on television. Some commenters express their support for the proposed definition of ''live programming.'' Examples of programming that may fit within the definition of ''live programming'' are news, sporting events, and awards shows.

56. We decline to adopt rules specifically addressing simulcast programming, that is, programming that is shown simultaneously on television and the Internet. Rather, live and near-live television programming that is simulcast shall be subject to the live and near-live programming compliance deadline, and prerecorded programming that is simulcast shall be subject to the prerecorded programming compliance deadlines. As we explained in the *NPRM,* we do not believe that the VPAAC, by mentioning simulcast programming in its definition of ''live programming,'' meant to encompass a ''simulcast'' in which prerecorded programming is shown on television and the Internet simultaneously.[50] We do not believe that our decision to apply the ''live'' and ''near-live'' deadlines to the simulcast of live and near-live programming will, as NAB claims, create a significant barrier to the distribution of live or near-live programming over the Internet. Rather, we expect that the compliance deadline of 12 months from the date of publication in the **Federal Register** for ''live'' and ''near-live'' programming will provide a sufficient period of time within which VPOs and VPDs can develop processes or methods to ensure the immediate closed captioning of simulcasts of live and near-live programming. We note that programming aired on television substantially simultaneously with its performance would not lose its status as ''live programming'' by being simulcast via IP. We disagree with NCTA's suggestion that simultaneous streaming of prerecorded programming on television and the Internet should have the same compliance schedule as live programming. NCTA has not explained why a longer deadline is necessary for the simulcast of pre-recorded programming, and the record contains no evidence justifying a longer deadline.

57. *Near-Live Programming.* We adopt the same definition of ''near-live programming'' that the Commission adopted in the *Video Description Order,* with one modification discussed below.[51] In the *NPRM,* the Commission proposed to define ''near-live programming'' as ''video programming that is substantively recorded and produced within 12 hours of its distribution to television viewers.'' Instead, we will define ''near-live programming'' as ''video programming

[46] We will consider upgrades to VPD software to be new applications. If a VPD is unable to meet all of the captioning requirements for such upgrades, it may request an exemption due to economic burden, as discussed in Section III.C.1 below.

[47] The same rationale for the two-year apparatus deadline applies to these VPD requirements.

[48] We clarify that when a VPD seeks an economic burden exemption from the requirements discussed in this paragraph, we will consider the exemption petition with regard to the specific feature(s) and device(s) for which implementing the captions purportedly would be economically burdensome, as discussed in Section IV.B (Achievability, Purpose-Based Waivers, and Display-Only Monitor Exemption), below.

[49] *Video Description: Implementation of the Twenty-First Century Communications and Video Accessibility Act of 2010,* FCC 11–126, 76 FR 55585, Sept. 8, 2011 (''*Video Description Order*'').

[50] We understand that a simulcast may involve either live programming or prerecorded programming. It strains common understanding of the phrase ''live programming'' to think that the VPAAC intended to extend the definition of that phrase to programming that is shown on television and the Internet simultaneously.

[51] The VPAAC did not agree on a single definition of ''near-live programming,'' with consumer group members supporting a definition of ''near-live programming'' as ''any programming that was produced from start to finish within 12 hours of being published or exhibited on television,'' and industry members supporting a definition that would reference programming that was ''*substantively* produced'' within the 12 hour limit. *See* VPAAC Report at 29, 34–35. Consumer Groups, in their comments to this proceeding, now express support for 24 hours as the dividing time for this type of programming.

that is performed and recorded less than 24 hours prior to the time it was first aired on television.''

58. The *Video Description Order* defined ''near-live programming'' as ''programming performed and recorded less than 24 hours prior to the time it was first aired.'' Industry and consumer group commenters support using that definition in the current proceeding. The *NPRM* noted certain differences between the video description and closed captioning contexts, but on further review, we find that those differences do not justify the adoption of a different definition of ''near-live programming'' in the IP closed captioning context as compared to the video description context. Thus, we conclude that there is no need to adopt a significantly different definition of ''near-live programming'' in the IP closed captioning context than in the video description context. We make one modification to the *Video Description Order's* definition to clarify that ''near-live programming,'' in the context of IP closed captioning, is video programming that is performed and recorded less than 24 hours prior to the time it was first aired *on television.*[52] We recognize that in the context of IP closed captioning, some ''near-live'' programming, such as a late-night talk show that is performed and recorded earlier the same day, may include some prerecorded elements, for example, a late-night talk show might include a segment that was performed and recorded more than 24 hours prior to its distribution on television. The presence of such prerecorded elements does not change the nature of the ''near-live'' programming.

59. *Prerecorded Programming.* We adopt the proposal from the *NPRM* to define ''prerecorded programming'' as video programming that is not ''live'' or ''near live.'' No commenter provided any substantive evaluation of the proposed definition of ''prerecorded programming.'' By defining ''prerecorded programming'' as video programming that is not ''live'' or ''near live,'' we will ensure that video programming fits within one category or the other.

60. *Edited for Internet Distribution.* We adopt the proposal from the *NPRM* to define video programming that is ''edited for Internet distribution'' as video programming for which the television version is substantially edited prior to its Internet distribution. We think this definition appropriately captures that class of edited video programming that might require a lengthier compliance deadline to facilitate the development of necessary procedures. No commenter proposed an alternate definition of ''edited for Internet distribution.'' As stated in the *NPRM,* we agree with the VPAAC that examples of ''substantial edits'' include the deletion of scenes or alterations to the televised version of musical scores, and that changes to the number or duration of advertisements would not constitute ''substantial edits.'' We do not agree with NAB that distinguishing between ''prerecorded programming'' and ''edited for Internet distribution'' would be unworkable[53] because the VPAAC provided clear examples and explanations of what constitutes substantial edits and what does not.

C. Exemption Process

1. Case-by-Case Exemptions

61. Section 713(d)(3) of the Act originally authorized the Commission to grant an individual exemption from the television closed captioning rules upon a showing that providing closed captioning ''would result in an undue burden.'' Congress provided guidance to the Commission on how it should evaluate such captioning exemptions by setting forth, in Section 713(e) of the Act, four ''factors to be considered'' in determining whether providing closed captioning ''would result in an undue economic burden:'' (1) the nature and cost of the closed captions for the programming; (2) the impact on the operation of the provider or program owner; (3) the financial resources of the provider or program owner; and (4) the type of operations of the provider or program owner.

62. In the CVAA, Congress amended Section 713(d)(3) of the Act by replacing the term ''undue burden'' with the term ''economically burdensome,'' and by adding certain guidance on the exemption procedures. Amended Section 713(d)(3) provides as follows:

> [A] provider of video programming or program owner may petition the Commission for an exemption from the requirements of this section, and the Commission may grant such petition upon a showing that the requirements contained in this section would be economically burdensome. During the pendency of such a petition, such provider or owner shall be exempt from the requirements of this section. The Commission shall act to grant or deny any such petition, in whole or in part, within 6 months after the Commission receives such petition, unless the Commission finds that an extension of the 6-month period is necessary to determine whether such requirements are economically burdensome.[54]

The Senate Committee on Commerce, Science, and Transportation encouraged the Commission, in determining whether the requirements enacted under Section 202(b) are ''economically burdensome,'' to consider the factors listed in pre-existing Section 713(e) of the Act, listed above.

63. We adopt the proposal in the *NPRM* and create a process by which VPDs and VPOs may petition the Commission on a case-by-case basis for a full or partial exemption of their IP closed captioning obligations, which the Commission may grant upon a finding that the requirements would be economically burdensome. This process is comparable to the Commission's procedures for assessing exemption requests from our television closed captioning rules prior to the amendment of Section 713(d)(3), and nearly identical to the procedures for exemptions based on economic burden that the Commission recently adopted for video description.[55] We will provide in our rules that the petitioner must support a petition for exemption with sufficient evidence to demonstrate that compliance with the requirements for closed captioning of video programming delivered via Internet protocol would be economically burdensome. The term ''economically burdensome'' means imposing significant difficulty or expense. In addition to the four statutory factors enumerated above, the petitioner must describe any other factors it deems relevant to the

[52] We recognize that NCTA expresses its support for the Commission's proposed definition in the *NPRM* of ''near-live programming,'' which was video programming that is substantively recorded and produced within 12 hours of its distribution to television viewers. We believe that the definition from the *Video Description Order* is clearer, however, and would not lead to potentially subjective determinations of what constitutes near-live programming.

[53] We understand that rights issues may, for example, necessitate changes in music scores from the television version to the IP version of a television program, which may also necessitate changes to the captioning from one version to the other. *See* VPAAC Report at 30. Regardless of whether the VPO itself makes these changes or the VPD is authorized to make the changes, we find that the need for such changes justifies a longer compliance deadline for prerecorded edited video programming than for prerecorded unedited video programming.

[54] 47 U.S.C. 613(d)(3). Because the statutory provision regarding exemptions due to economic burden references only VPPs and VPOs, our rule implementing this provision also will reference VPPs and VPOs, but not VPDs. We note, however, that the exclusion of VPDs has no practical effect as we have defined VPD and VPP as having the same meaning.

[55] *See* 47 CFR 79.1(f), 79.3(d). *See also Interpretation of Economically Burdensome Standard; Amendment of Section 79.1(f) of the Commission's Rules; Video Programming Accessibility,* Order and Notice of Proposed Rulemaking, 26 FCC Rcd 14941, 14957–62, paras. 30–39 (2011) (''*Interim Standard Order and NPRM*'').

Commission's final determination and any available alternatives that might constitute a reasonable substitute for the IP closed captioning requirements, for example, text or graphic display of the content of the audio portion of the programming. The Commission will place exemption petitions on public notice, and any interested person may file comments or oppositions to the petition within 30 days after release of the public notice of the petition. Within 20 days after the close of the period for filing comments or oppositions, the petitioner may reply to any comments or oppositions filed. Upon a finding of good cause, the Commission may lengthen or shorten any comment period and waive or establish other procedural requirements. Those filing petitions and responsive pleadings must include a detailed, full showing, supported by affidavit, of any facts or considerations relied on.

64. We disagree with those commenters who contend that Congress expressly amended Section 713(d) to lower the applicable burden, and that the ''economically burdensome'' standard is broader than the previous ''undue burden'' standard. In the recent *Interim Standard Order,* the Commission interpreted on a provisional basis the term ''economically burdensome'' as used in Section 202 of the CVAA to be synonymous with the term ''undue burden'' that was formerly used in Section 713(e) of the Act.[56] The Commission stated ''that Congress, when it enacted the CVAA, intended for the Commission to continue using the undue burden factors contained in Section 713(e), as interpreted by the Commission and reflected in Commission rules and precedent, for individual exemption petitions, rather than to make a substantive change to this standard.'' Among other things, in that proceeding the Commission cited to the legislative history of the 1996 amendments to the Act, in which Congress clearly distinguished between the more extensive factors that should be used to evaluate categorical exemptions adopted by regulation under Section 713(d)(1) of the Act and the factors that should be used to evaluate the individual exemption requests submitted under Section 713(d)(3) of the Act. Accordingly, we disagree with any suggestion that the Commission should apply the broader standards applicable to categorical exemption requests to our consideration of individual exemption requests in the IP closed captioning context. Rather, we interpret the term ''economically burdensome'' in Section 713(d)(3) of the Act, as amended by the CVAA, to be synonymous with the term ''undue burden'' as this section was originally drafted.

65. Thus, consistent with the analyses in the *Interim Standard Order* and the *Video Description Order,* we adopt the process proposed in the *NPRM* for case-by-case exemptions based on economic burden with a few minor modifications.[57] First, in the *NPRM* the Commission proposed the following language in what is now numbered new § 79.4(d)(3) of our rules: ''The Commission will evaluate economic burden with regard to the individual outlet *or programming.''* In the context of the IP closed captioning rules, the ''individual outlet'' references the VPO or VPD. To be consistent with § 79.1(f)(3) as it now exists in the Commission's rules and as the Commission has proposed amending it in the *Interim Standard Order and NPRM* and with § 79.3(d)(3) as adopted in the *Video Description Order,* we will omit the phrase ''or programming.''[58] As we explained in the *1997 Closed Captioning Order,* in evaluating economic burden, we ''examine the overall budget and revenues of the individual outlet and not simply the resources it chooses to devote to a particular program.'' Consistent with that directive, when deciding whether to grant a petition for an exemption from the IP closed captioning rules, we will consider the overall budget and revenues of the individual outlet and its ability to provide closed captioning, and not simply the resources it chooses to devote to a particular program. Second, in the *NPRM* the Commission proposed to codify the following language in our rules governing exemption petitions based on economic burden: ''The Commission shall act to deny or approve any such petition, in whole or in part, within 6 months after the Commission receives such petition, unless the Commission finds that an extension of the 6-month period is necessary to determine whether such requirements are economically burdensome.'' Consistent with the *Interim Standard Order and NPRM* and the adopted rules in the *Video Description Order,* we find it unnecessary to codify in our rules the time limit for Commission action on exemption petitions, since the 6-month deadline for Commission action is codified in the CVAA and thus it applies regardless of whether it is codified in our rules. Third, in the *NPRM* the Commission proposed to include the following language in what is now numbered new § 79.4(d)(11): ''During the pendency of an economic burden determination, the Commission will consider the video programming provider or owner subject to the request for exemption as exempt from the requirements of this section.''[59] To be consistent with § 79.1(f)(11) as proposed in the *Interim Standard Order and NPRM* and with § 79.3(d)(11) as adopted in the *Video Description Order,* we will omit the words ''provider or owner'' from § 79.4(e)(11) as proposed in the *NPRM.* By revising the proposed language to omit those words, we intend to clarify that the outlet seeking an exemption is relieved of its closed captioning obligations only for the specific programming for which it requested an exemption.

66. Finally, we will require electronic filing of individual closed captioning exemption requests, and will require electronic filing of comments on and oppositions to such petitions. We hereby delegate to the Chief, Consumer and Governmental Affairs Bureau, authority to establish by Public Notice the electronic filing procedures for individual exemption requests. Such a requirement is consistent with the *2011 Electronic Filing Report and Order,* in which the Commission adopted a requirement to use electronic filing whenever technically feasible.[60] Although the *NPRM* proposed to require

[56] In the *Notice of Proposed Rulemaking* that accompanied the *Interim Standard Order,* the Commission sought comment on making permanent this provisional interpretation of ''economically burdensome.'' *See Interim Standard Order and NPRM,* 26 FCC Rcd at 14961–62, paras. 38–39. The Commission has received one comment in response, which supports this interpretation.

[57] We note that Consumer Groups make additional proposals about case-by-case exemption petitions. Because we intend to address exemption petitions on a case-by-case basis, we decline to adopt the categorical findings suggested by Consumer Groups. Further, neither the language nor the history of the CVAA indicates that Congress intended to require a heightened *prima facie* showing for such petitions, as suggested by Consumer Groups.

[58] The Commission's television closed captioning rules currently require consideration of the extent to which the provision of closed captions will create an undue burden with regard to the individual outlet. *See* 47 CFR 79.1(f)(3). The *Interim Standard Order and NPRM* proposes to amend this section by replacing the term ''undue burden'' with the term ''economically burdensome,'' in accordance with the changes made in the CVAA. *See Interim Standard Order and NPRM,* 26 FCC Rcd at 14989 (App. B—Proposed Rules); 47 CFR 79.3(d)(3).

[59] Of course, the programming will still be subject to the closed captioning requirements under 47 CFR 79.1 when provided on broadcast television or by an MVPD, notwithstanding its exemption from the IP closed captioning requirements under 47 CFR 79.4.

[60] *Commission's Rules of Practice, Procedure, and Organization,* FCC 11–16, 76 FR 24383, May 2, 2011 (''*2011 Electronic Filing Report and Order*'').

paper filings, we find that an electronic filing requirement would be most consistent with the Commission's stated goals of efficiency and modernization and would streamline the petition process for all parties. Persons who file comments or oppositions to the petition must serve the petitioner with copies of those comments or oppositions and must include a certification that the petitioner was served with a copy, and any petitioner filing a reply to comments or oppositions must serve the commenting or opposing party with a copy of the reply and must include a certification that the party was served with a copy. We clarify that pursuant to § 79.4(d)(7), comments or oppositions and replies shall be served upon a party, its attorney, or its other duly constituted agent by delivery or mailing a copy to the party's last known address, or by service via email as provided in the final rules.

2. Categorical Exemptions

67. In Section 202(b) of the CVAA, Congress provided that the Commission ''may exempt any service, class of service, program, class of program, equipment, or class of equipment for which the Commission has determined that the application of such regulations would be economically burdensome for the provider of such service, program, or equipment.'' In the context of television closed captioning, the Commission has recognized that the term ''economically burdensome'' is applied differently to case-by-case exemptions than it is to rulemaking decisions to exempt categories of programming. Existing rules for closed captioning of television programming contain a number of categorical exemptions. In the *NPRM,* the Commission sought comment on whether any of the categorical exemptions found in the television closed captioning rules should apply to IP closed captioning.

68. We decline at this time to apply any of the categorical exemptions found in the television closed captioning rules to the IP closed captioning rules. Thus, programming that appears on television with captions after the effective date of the IP closed captioning rules will be subject to the rules even if the programming was exempt from the television closed captioning requirements but was nevertheless captioned voluntarily. Programming that is exempt from the television closed captioning requirements and that never appears on television with captions is not subject to the IP closed captioning requirements, which by definition do not apply to programming that appears on television only without captions. The record does not contain sufficient evidence to demonstrate that it would be economically burdensome to require captioning of programming that would fit within one of the television exemptions, if that programming was shown on television with captions after the effective date of our new rules. This approach we adopt is consistent with the CVAA, which requires ''closed captioning on video programming delivered using Internet protocol that was published or exhibited on television with captions after the effective date of such regulations.'' If Congress intended to limit the IP closed captioning rules to programming that ''was *required to be* published or exhibited on television with captions,'' it would have said so.

69. We emphasize an important difference between exemptions for closed captioning of IP-delivered video programming and exemptions for closed captioning of television programming. In the television context, programming that is exempt from the closed captioning requirements may never have been associated with a closed captioning file. In contrast, the IP closed captioning rules only apply to programming that was captioned on television, and thus, they do not require the creation of closed captions where captions did not already exist. We acknowledge that a particular program may be shown on television both without captions by an entity that is exempt under the television closed captioning rules, and with captions by an entity that is not exempt. Once the program is shown on television with captions after the effective date of our new rules, all VPDs must enable the rendering or pass through of closed captions to the end user, except for any VPD that obtains an individual exemption due to economic burden pursuant to the procedures adopted above.

70. We reject the categorical exemptions proposed by CTIA, NCTA, and Starz. CTIA requests an exemption from the requirements of Section 202 of the CVAA for mobile service providers. NCTA suggests that a new network that is exempt from the television closed captioning requirements should also be exempt from the IP closed captioning requirements. Starz requests ''that the Commission clarify that VPOs need not caption other programming streamed through VPOs' Web sites'' besides linear and video-on-demand programming streamed to authenticated subscribers. We find that these requested categorical exemptions are overly broad and not sufficiently supported by the record, the statute, or legislative history. None of these parties demonstrates that compliance with the IP closed captioning requirements would be an economic burden for an entire category of entities. Further, we will consider on a case-by-case basis petitions requesting an exemption based on economic burden filed by a particular mobile service provider, new network, or other person or entity.

71. We also adopt the *NPRM* proposal not to delay implementation of, or waive, the rules as applied to live programming, except by adopting the VPAAC recommendation to provide a lengthier compliance deadline for live programming than that provided for prerecorded programming that is not edited for Internet distribution. Section 202(b) of the CVAA permits the Commission to delay or waive the applicability of its IP closed captioning rules ''to the extent the Commission finds that the application of the regulation to live video programming delivered using Internet protocol with captions after the effective date of such regulations would be economically burdensome to providers of video programming or program owners.'' The VPAAC considered the special nature of live programming by proposing a longer compliance deadline for live programming than for prerecorded and unedited video programming, which we adopt above. We do not see any justification for a further delay or waiver of the Commission's new IP closed captioning rules as applied to live programming at this time.

D. De Minimis Failure To Comply and Alternate Means of Compliance

72. *De Minimis Failure to Comply.* Section 202(b) of the CVAA requires the Commission's IP closed captioning regulations to ''provide that *de minimis* failure to comply with such regulations by a video programming provider or owner shall not be treated as a violation of the regulations.'' [61] The statute and legislative history did not elaborate upon the meaning of ''*de minimis* failure to comply.'' In the *NPRM,* the Commission proposed that, to determine whether a failure to comply is *de minimis,* it would ''consider the particular circumstances of the failure to comply, including the type of failure, the reason for the failure, whether the failure was one-time or continuing, and

[61] Because the statutory provision regarding *de minimis* failures to comply references only VPPs and VPOs, our rule implementing this provision also will reference VPPs and VPOs, but not VPDs. We note, however, that the exclusion of VPDs has no practical effect as we have defined VPD and VPP as having the same meaning.

the time frame within which the failure was remedied.''

73. We adopt the proposed rule, which provides that a video programming provider or owner's *de minimis* failure to comply with § 79.4 of our rules shall not be treated as a violation of the requirements.[62] We intend to apply the *de minimis* standard in a flexible manner, consistent with our approach in the television realm, rather than specifying particular criteria that we will apply to make a *de minimis* determination. In the television context, ''[i]n considering whether an alleged violation has occurred, [the Commission] will consider any evidence provided by the video programming distributor in response to a complaint that demonstrates that the lack of captioning was *de minimis* and reasonable under the circumstances.''[63] This approach is also supported by the record. Thus, we decline to adopt specific criteria that we will consider in evaluating whether a failure to comply is *de minimis.*

74. *Alternate Means of Compliance.* Section 202(b) of the CVAA provides that ''[a]n entity may meet the requirements of this section through alternate means than those prescribed by regulations pursuant to subsection (b), as revised pursuant to paragraph (2)(A) of this subsection, if the requirements of this section are met, as determined by the Commission.''[64] Should an entity seek to use an ''alternate means'' to comply with the IP closed captioning requirements, that entity may either (i) request a Commission determination that the proposed alternate means satisfies the statutory requirements through a request pursuant to § 1.41 of our rules; or (ii) claim in defense to a complaint or enforcement action that the Commission should determine that the party's actions were permissible alternate means of compliance. Rather than specify what may constitute a permissible ''alternate means,'' we conclude that the best means of implementing this provision is to address any specific requests from parties subject to the new IP closed captioning rules when they are presented to us.

E. Complaint Procedures

75. In the *NPRM,* the Commission proposed to adopt procedures for complaints alleging a violation of the IP closed captioning rules that are analogous to the procedures the Commission uses for complaints alleging a violation of the television closed captioning rules, with certain modifications. Commenters generally support the Commission's proposed approach of modeling the IP closed captioning complaint process on the existing television closed captioning complaint process. As explained below, we adopt these proposals with certain enhancements and changes.[65]

76. *Timing of Complaint.* In the *NPRM,* the Commission asked whether to impose the same 60-day time frame for complaints involving IP-delivered video programming as for complaints involving programming aired on television. We recognize that determining the date on which IP-delivered video programming was noncompliant may be more difficult than determining the date on which television programming was noncompliant, since television programming often airs at specified times whereas IP-delivered video programming may be available continuously. If IP-delivered video programming is available without required captioning, then it is noncompliant during the entire time that it is available. A number of commenters support the adoption of a filing deadline for complaints alleging violations of the IP closed captioning rules based on the date on which the consumer experienced the captioning problem, explaining that it would provide VPDs and VPOs with some certainty as to previously distributed content, and would ensure that the complaint process occurs when evidence is fresh. Some commenters support a 60-day time frame, while others support a shorter or longer time frame.

77. We adopt the proposed 60-day time frame and require that complaints be filed within 60 days after the complainant experiences a problem with the captioning of IP-delivered video programming. We recognize that problems with captions of IP-delivered video programming often may be ongoing, in that a program may remain online without captions for a period of time. We will require the consumer to file a complaint within 60 days of any date on which the consumer accessed the programming and did not receive compliant captions. The Commission will accept a consumer's allegations as to the timeliness of a complaint as true, unless a VPO or VPD demonstrates otherwise. Establishing a deadline based on the date the complainant accessed noncompliant programming will provide certainty to VPOs and VPDs and ensure that the evidence available at the time of the complaint remains fresh. The 60-day time frame, in particular, has worked well in the television context, and we therefore find it appropriate to use the same deadline here.

78. We find that it is important to provide a limit on the time within which a complaint must be filed, so that evidence is available to adjudicate the complaint properly. For example, even if a particular program remains available via IP, technical problems with the consumer's device or Internet connection on a specific date might have been the cause of a particular captioning problem, and it might be difficult to make that determination if too much time has elapsed. We disagree with Consumer Groups that the time frame should begin at the last time the violating video was distributed to any consumer. Some video programming may be available online for years, and so it may be difficult to investigate a complaint filed by a consumer years after the captioning problem occurred.

79. *Option to File Complaints with the Commission or with the VPD.* Similar to the television closed captioning rules, we will create a process for complainants to file their complaints either with the Commission or with the VPD responsible for enabling the rendering or pass through of the closed captions for the video programming. First, we adopt a process by which complainants may file complaints with the Commission, and those complaints may be directed against a particular VPD or VPO. Second, to encourage the prompt resolution of complaints in the marketplace, we also adopt a process by which complainants may first file their complaints with the VPD, and if complainants are not satisfied by that process, they may then file their complaints with the Commission. These procedures are discussed further below. We do not create a process by which complainants may first file their complaints with the VPO, because VPOs

[62] This language is intended to make clear that *de minimis* violations will not lead to enforcement actions.

[63] *1998 Closed Captioning Recon. Order.*

[64] As explained in the *NPRM,* the statute and legislative history did not elaborate upon the meaning of ''alternate means'' in this provision, although the House Committee explained that in the context of Section 203, alternate means was intended ''to afford entities maximum flexibility in meeting the requirement that video programming delivered using Internet protocol be captioned,'' and that the Commission should ''provide some flexibility where technical constraints exist.''

[65] The complaint procedures discussed in this *Report and Order* address the process by which the Commission's Consumer and Governmental Affairs Bureau processes complaints. This process differs from that of the Commission's Enforcement Bureau, which investigates whether a violation has occurred and, if so, what penalty to assess, regardless of whether a complaint has been filed.

generally do not maintain direct relationships with consumers and may lack the ability to provide consumers with means of access such as the contact information we require below of VPDs.

80. In the *NPRM,* the Commission asked whether we should permit those filing complaints alleging a violation of the IP closed captioning rules to file the complaint directly with the VPD first, or whether it is instead preferable to require all complaints to come directly to the Commission in the first instance. Some commenters support a Commission procedure for filing complaints with the VPD first. Permitting the filing of complaints directly with the VPD, and allowing the VPD to attempt to resolve the complaint with the consumer before the Commission engages in enforcement proceedings, would benefit VPDs by minimizing their involvement in complaint proceedings at the Commission and may benefit consumers by fostering a prompt resolution of their complaints. Thus, we adopt procedures to permit complainants to file their complaints either with the Commission or with the VPD responsible for enabling the rendering or pass through of the closed captions for the video programming.[66]

81. Consumers who file their complaints first with the Commission may name a VPD or VPO in the complaint, since both entities are subject to the IP closed captioning rules. The Commission will forward such complaints to the named VPD and/or VPO, as well as to any other VPD or VPO that Commission staff determines may be involved, as discussed further below. If a complaint is filed first with the VPD, our rules will require the VPD to respond in writing to the complainant within thirty (30) days after receipt of a closed captioning complaint.[67] If a VPD fails to respond to the complainant within thirty (30) days, or the response does not satisfy the consumer, the complainant may file the complaint with the Commission within thirty (30) days after the time allotted for the VPD to respond. If the consumer then files the complaint with the Commission (after filing with the VPD), the Commission will forward the complaint to the named VPD, as well as to any other VPD or VPO that Commission staff determines may be involved.[68] If the Commission is aware that a complaint has been filed simultaneously with the Commission and the VPD, the Commission may allow the process involving the VPD and the consumer to reach its conclusion before moving forward with its complaint procedures, in the interest of efficiency.[69]

82. The flexible complaint process adopted herein will benefit consumers because it enables them to file their complaints with the Commission naming either the VPD *or* the VPO. We reiterate our expectation that consumers generally will name the VPD in their complaints, since that is the entity that distributes the programming to consumers. Nevertheless, if a consumer names a VPD in its complaint but the Commission determines that its investigation should be directed against the VPO, the Commission will forward the complaint to the VPO without any further involvement of the consumer.[70] In addition, if a VPD receives a complaint from the Commission that it believes the Commission should have directed to the VPO, the VPD may say so in its response to the complaint. In such instances, however, the VPD's response must also indicate the identity and contact information of the VPO to which the VPD believes the complaint should be directed. Since consumers may file any IP closed captioning complaint with the VPD or name the VPD in any complaint filed with the Commission, we find that Consumer Groups' concern that consumers may be unable to determine the entity against which they should file a complaint is unfounded, because consumers are not required to name or otherwise identify the applicable VPO. The complaint process will be aided further by the Commission's ability to request additional information from any relevant entities when, in the estimation of Commission staff, such information is needed to investigate the complaint or adjudicate potential violation(s) of Commission rules.

83. *Complaint Response Time.* Upon receipt of a complaint from the Commission, we will require the VPD and/or VPO to respond in writing to the Commission and the complainant within 30 days. We conclude that the record does not support deviating from the 30-day time frame contained in the television closed captioning rules for responding to complaints. While Consumer Groups propose that the Commission instead require VPDs to respond to complaints within 15 calendar days, we agree with other commenters that such a short deadline would be unworkable. Although in the *NPRM* the Commission proposed to provide explicitly in our rules that the Commission may specify response periods longer than 30 days on a case-by-case basis, we find it unnecessary to do so because the Commission may waive its rules for good cause, *sua sponte* or pursuant to a waiver request, and it can grant motions for extension of time.

84. In response to a complaint, VPDs and VPOs must file with the Commission sufficient records and documentation to prove that the responding entity was (and remains) in compliance with the Commission's rules. Conclusory or insufficiently supported assertions of compliance will not carry a VPD's or VPO's burden of proof. If the responding entity admits that it was not or is not in compliance with the Commission's rules, it shall file with the Commission sufficient records and documentation to explain the reasons for its noncompliance, show what remedial steps it has taken or will take, and show why such steps have been or will be sufficient to remediate the problem.

85. *Resolution of Complaints.* We decline at this time to specify a time frame within which the Commission must act on IP closed captioning complaints. While we recognize the importance of prompt actions on complaints, no such time frame exists for television closed captioning complaints, and we agree with commenters who explain that it would be difficult at this juncture to predict

[66] The record does not support the creation of a process by which consumers file complaints directly with the VPO. We find it unlikely in any event that a consumer would choose to file a complaint with a VPO, with which it has no direct relationship, instead of with a VPD from which it receives IP-delivered video programming. Of course, any consumer that wishes to contact a VPO to share a captioning concern may do so.

[67] If a VPD receives a complaint directly from a consumer but believes that the captioning problem was caused by the VPO, the VPD may indicate in its response to the consumer that the consumer may choose to file a complaint with the Commission against the VPO. To the extent a VPD believes that fault for the captioning problem lies elsewhere, the VPD should make this clear, and provide any other relevant information, in its written response to the consumer.

[68] These procedures are consistent with procedures in our existing television closed captioning rules.

[69] We note Consumer Groups' proposal that Commission enforcement proceedings and VPD attempts at remediation should occur concurrently. In response, AT&T explains that the proposal of Consumer Groups would violate the Administrative Procedure Act and the Constitutional guarantee of due process. The Commission may not be aware that a complaint has been filed simultaneously with the Commission and with a VPD, but when so informed, the Commission will provide the VPD with the 30-day period after the VPD received the complaint to resolve the complaint with the complainant first, in the interest of efficiency.

[70] While the complaint procedures proposed in the *NPRM* would provide the Commission with needed flexibility to reach the responsible entity or entities, we do not intend to burden parties by engaging in simultaneous investigations, where a complaint can best be resolved by focusing the Commission's investigation on a single party or on one party followed by another party.

the length of time the Commission will need to resolve IP closed captioning complaints. In evaluating a complaint, the Commission will review all relevant information provided by the complainant and the subject VPDs or VPOs, as well as any additional information the Commission deems relevant from its files or public sources. When the Commission requests additional information, parties to which such requests are addressed must provide the requested information in the manner and within the time period the Commission specifies.

86. *Sanctions or Remedies.* We decline to create sanctions or remedies for IP closed captioning enforcement proceedings that deviate from the Commission's flexible, case-by-case approach governed by § 1.80 of our rules. We do not find warranted the proposal of Consumer Groups that the Commission assess a new violation for each complaint, with a minimum forfeiture level of $10,000 per violation. The record does not support either the $10,000 minimum forfeiture level proposed by the Consumer Groups or establishing a base forfeiture level for IP closed captioning complaints at this time. Further, since closed captioning requirements for IP-delivered video programming are new, the Commission may benefit from conducting investigations before codifying a base forfeiture for addressing violations. As stated in the *NPRM,* we will adjudicate complaints on the merits and may employ the full range of sanctions and remedies available to the Commission under the Act.

87. *Content of Complaints.* Given the variety of issues that could cause IP closed captioning not to reach an end user (for example, a VPO's failure to provide captions, a VPD's failure to render or pass through captions, captions of an inadequate quality, a problem with the device used to view the captions, or the fact that captions were not required because the programming had not been shown on television with captions after the effective date of the new rules), we think it is important that we receive complaints containing as much information as possible that will enable their prompt and accurate resolution. Accordingly, complaints should include the following information:[71] (a) The name, postal address, and other contact information of the complainant, such as telephone number or email address;[72] (b) the name and postal address, Web site, or email address of the VPD and/or VPO against which the complaint is alleged, and information sufficient to identify the video programming involved; (c) information sufficient to identify the software or device used to view the program; (d) a statement of facts sufficient to show that the VPD and/or VPO has violated or is violating the Commission's rules, and the date and time of the alleged violation;[73] (e) the specific relief or satisfaction sought by the complainant; and (f) the complainant's preferred format or method of response to the complaint. Consumer Groups also suggest that the Commission should permit consumers to submit photographic or video evidence of the captioning problem when filing a complaint. If a consumer wishes to submit such evidence, Commission staff will consider the evidence as part of the complaint proceeding. If a complaint is filed with the Commission, the Commission will forward complaints meeting the above-specified requirements to the appropriate party or parties. If a complaint does not contain all of the information specified in this paragraph and Commission staff determines that certain information is essential to resolving the complaint, Commission staff may work with the complainant to ascertain the necessary information and supplement the complaint. The Commission retains discretion not to investigate complaints that lack the above-specified information and complaints for which the Commission is unable to ascertain such information after further inquiries to the complainant.

88. *Written Complaints.* We conclude that complaints filed either with the Commission or with the VPD must be in writing. Consumer Groups propose that the Commission should permit the filing of complaints by ''any reasonable means,'' and it also proposes that the Commission accommodate evidence for closed captioning complaints submitted in American Sign Language. NAB disagrees, proposing instead that the means of filing complaints should mirror the television closed captioning rules. We find no reason to deviate from the requirement in the television closed captioning rules that a complaint must be in writing, and we thus adopt that proposed requirement, which has worked well in the television context. We clarify that, if a complainant calls the Commission for assistance in preparing a complaint (by calling either 1–888–CALL–FCC or 1–888–TELL–FCC (TTY)), and Commission staff documents the complaint in writing for the consumer, that constitutes a written complaint. A written complaint filed with the Commission must be transmitted to the Consumer and Governmental Affairs Bureau through the Commission's online informal complaint filing system, U.S. Mail, overnight delivery, or facsimile. After the rules become effective, the Consumer and Governmental Affairs Bureau will release a consumer advisory with instructions on how to file complaints in various formats, including via the Commission's Web site.

89. *Revisions to Form 2000C.* The Commission directs the Consumer and Governmental Affairs Bureau to revise the existing complaint form for disability access complaints (Form 2000C) in accordance with this *Report and Order,* to foster the filing of IP closed captioning complaints. In the *NPRM,* the Commission asked if it should revise the existing complaint form for disability access complaints (Form 2000C) to request information specific to complaints involving IP closed captioning, and industry and consumer groups support this proposal. Should the complaint filing rules adopted in this *Report and Order* become effective before the revised Form 2000C is available to consumers, IP closed captioning complaints may be filed in the interim by fax, mail, or email.

90. *Contact Information.* We will require VPDs to make contact information available to end users for the receipt and handling of written IP closed captioning complaints. Given that we will permit consumers to file their IP closed captioning complaints directly with a VPD, we think it is important that consumers have the information necessary to contact the VPD. At this time, we decline to specify how VPDs must provide contact information for the receipt and handling of written IP closed captioning complaints, but we expect that VPDs will prominently display their contact

[71] While we proposed in the *NPRM* to require complaints to include this information, we recognize that some of the requested information may not be readily ascertained by consumers. For example, it may be difficult for consumers to determine the identity of the VPO, the postal address of the VPD or VPO, and the type of software or device the consumer used to view IP-delivered video programming. Accordingly, we provide that complaints *should* (but are not required to) include the specified information. The Commission will best be in a position to investigate complaints that include the maximum information requested.

[72] We have enhanced this category of information from what was proposed in the *NPRM,* to facilitate contacting the complainant by means other than postal mail.

[73] We have modified this requirement from what was proposed in the *NPRM,* in recognition of the finding that the date and time of the alleged violation should be included with all IP closed captioning complaints.

information in a way that it is accessible to all end users of their services. We agree with AT&T that ''a general notice on the VPP's/VPD's Web site with contact information for making inquiries/complaints regarding closed captioning over IP video'' would be sufficient, but we emphasize that such notice should be provided in a location that is conspicuous to viewers. We also agree with Consumer Groups that creating a database comparable to the television database of video programming distributor contact information may be infeasible in the IP context, given the potentially large number of VPDs that may emerge over time. Therefore, we decline at this time to create a database of IP video providers and their closed captioning contacts; if we find that VPDs are not providing their contact information in a sufficient manner, however, we may revisit this issue. Very few commenters provided their views on what contact information we should require. Accordingly, we will parallel the requirements for television video programming distributor contact information for the receipt and handling of written closed captioning complaints. Thus, we will require VPDs of IP-delivered video programming to make the following contact information accessible to end users: the name of a person with primary responsibility for IP closed captioning issues and who can ensure compliance with our rules; and that person's title or office, telephone number, fax number, postal mailing address, and email address. VPDs shall keep this information current and update it within 10 business days of any change.

91. We will not, however, require VPDs to make contact information available for the *immediate* receipt and handling of closed captioning concerns of consumers. The television closed captioning rules require video programming distributors to ''make available contact information for the receipt and handling of immediate closed captioning concerns raised by consumers while they are watching a program,'' so that distributors can work with consumers to resolve the program at that time. We draw this distinction for these rules because we are concerned that Web sites and other sources of IP-delivered video programming may not be well-positioned to respond to a consumer's immediate closed captioning concerns.

IV. Section 203 of the CVAA

92. The CVAA amends Section 303(u) of the Act to ''require that, if technically feasible, apparatus designed to receive or play back video programming transmitted simultaneously with sound * * * and us[ing] a picture screen of any size be equipped with built-in closed caption decoder circuitry or capability designed to display closed-captioned video programming.'' In the discussion that follows, we first provide our interpretation of the statutory term ''apparatus.'' We then analyze additional provisions of Section 203 of the statute, including the provisions that ''apparatus'' that use a screen of any size are covered and that our requirements only apply to the extent they are technically feasible. Further, we address the statutory provisions for waivers of closed captioning obligations that are not ''achievable'' or are not appropriate given the primary purpose of the device being used to view video programming, as well as the statutory exemption for display-only monitors. We then address the specific, functional requirements covered devices will be required to satisfy. Additionally, we incorporate the statutory language regarding recording devices, including the obligations that they receive, store, and play back closed captioning, address interconnection mechanisms, and make minor changes to our existing closed captioning rules for analog and digital television receivers. Finally, we address how parties may meet these requirements through alternate means of compliance, specify the time frames by which manufacturers must meet their obligations under these rules, and describe how consumers may file complaints for violations of these rules.

A. Apparatus Subject to Section 203 of the Act

93. The CVAA does not define the term ''apparatus,'' requiring the Commission to interpret the term to determine the exact meaning and extent of the statute's reach. Taking into account the statutory language and purpose, the record in this proceeding, and the conclusions the Commission reached in the *ACS Order,*[74] we interpret this language to apply to hardware (that is, physical devices such as set-top boxes, PCs, smartphones, and tablets) designed to receive or play back video programming transmitted simultaneously with sound and any integrated software (that is, software installed in the device by the manufacturer before sale or that the manufacturer requires the consumer to install after sale). Commenters unanimously agree that physical devices capable of displaying video are covered by the statutory term ''apparatus.'' Given the fact that the means by which a device actually displays video—the ''video player''—may be comprised of hardware, software, or a combination of both, we do not believe that it would be appropriate to define ''apparatus'' solely in terms of hardware. Rather, in order to effectuate the statutory goals, we define ''apparatus'' to include the physical device and the video players that manufacturers install into the devices they manufacture (whether in the form of hardware, software, or a combination of both) before sale, as well as any video players that manufacturers direct consumers to install.[75] Thus, ''apparatus'' includes integrated video players, *i.e.,* video players that manufacturers embed in their devices, video players designed by third parties but installed by manufacturers in their devices before sale, and video players that manufacturers require consumers to add to the device after sale in order to enable the device to play video.[76] In addition, if a manufacturer offers updates or upgrades to a video player component of a device, it also must ensure that those updates or upgrades are capable of displaying closed captions.[77] Further, if a manufacturer

[74] The *ACS Order* applies the accessibility requirements of Section 716 of the CVAA to non-interconnected VoIP services, electronic messaging services, and interoperable video conferencing services. *ACS Order,* 26 FCC Rcd at 14564, para. 13, *implementing* Public Law 111–260 sec. 104; 47 U.S.C. 617–619. In applying the provisions of the CVAA to entities that make or produce end user equipment, including tablets, laptops, and smartphones responsible for the accessibility of the hardware and manufacturer-provided software used for email, SMS text messaging, and other advanced communications services, the Commission addressed many issues of first impression related both to the CVAA and to the regulation of high-tech devices not traditionally reached by the Commission's accessibility rules. We find the *ACS Order* a useful guide to interpreting similar provisions and issues in this proceeding. Accordingly, we refer to the *ACS Order* at various points in the following discussion.

[75] We note that manufacturers of covered apparatus pursuant to this section must also comply with the performance and display requirements set forth below.

[76] As provided in the *ACS Order,* ''[m]anufacturers are responsible for the software components of their [devices] whether they pre-install the software, provide the software to the consumer on a physical medium such as a CD, or require the consumer to download the software.'' *ACS Order,* 26 FCC Rcd at 14582, para. 69.

[77] We reject commenters' arguments that Section 203 is limited to enabling the display of closed captioning solely to video programming provided pursuant to Section 202 of the CVAA. Section 203 broadly requires covered devices to be equipped and capable of displaying closed captioned video programming. 47 U.S.C. 303(u)(1)(A). The legislative history states that the CVAA was enacted to ''ensure that devices consumers use to view video programming are able to display closed captions.'' Moreover, as a technical and practical matter, once a device implements the closed captioning capability for a particular format of content, then the origin of that content is

selects a third-party operating system that includes a video player, that video player will also be considered part of the ''apparatus.''

94. Our approach is consistent with the statute, which uses broad terminology, applying to ''apparatus designed to receive and play back video programming transmitted simultaneously with sound.'' In addition to the statute's broad language, the legislative history suggests that the statute was intended to have a broad scope. For example, the House and Senate Committee Reports describe the goal of Section 203(a) as ''ensur[ing] that devices consumers use to view video programming are able to display closed captions.'' As explained above, applying our rules solely to hardware would not fulfill this goal because the ability to display closed captions may be implemented through hardware, software or a combination of both. Thus, defining apparatus to include ''integrated software'' is necessary to achieve Congress's goal to ensure individuals with disabilities are able to fully access video programming. We recognize that this places the burden on manufacturers to ensure that all the software they choose to build into or preinstall in their devices complies with our closed captioning rules. We conclude, however, that this is necessary to implement the statute and effectuate congressional intent. The approach we adopt is also consistent with the approach the Commission followed in the *ACS Order.*[78] We decline to include within the scope of our interpretation of the statutory term ''apparatus'' third-party software that is downloaded or otherwise added to the device independently by the consumer after sale and that is not required by the manufacturer to enable the device to play video.[79] Given our interpretation of the statute to cover integrated software, as well as our decision under Section 202 (as discussed above) that VPDs must ensure that any video player they provide to the consumer is capable of rendering or passing through closed captions, we believe that the rules we adopt will cover the majority of situations in which consumers view video, and therefore do not believe that it is necessary to hold manufacturers responsible for such ''third-party software'' or to regulate software companies directly.[80] In interpreting the scope of the statute in this manner, we have balanced the needs of consumers with the need to minimize burdens on the industry to ensure that our rules do not impede innovation in the device and software markets.

95. *Designed to Receive or Play Back Video Programming.* Our decision to cover ''integrated video players'' is consistent with the statutory language of Section 203 of the CVAA which covers those apparatus ''designed to receive or play back video programming transmitted simultaneously with sound.'' Under our interpretation, if a device is sold with (or updated by the manufacturer to add) an integrated video player capable of displaying video programming, that device is ''designed to receive or play back video programming'' and subject to our rules adopted pursuant to Section 203. Some commenters argue that we should evaluate whether a device is covered by focusing on the original design or intent of the manufacturer of the apparatus and not the consumer's ultimate use of that apparatus. We disagree. We believe that to determine whether a device is designed to receive or play back video programming, and therefore covered by the statute, we should look to the device's functionality, *i.e.* whether it is capable of receiving or playing back video programming. We are persuaded that adopting this bright-line standard based on the device's capability will provide more certainty for manufacturers.[81] In any event, to the extent a device is built with a video player, it would be reasonable to conclude that viewing video programming is one of the intended uses of the device. From a consumer perspective, it would also be reasonable to expect that a device with a video player would be capable of displaying captions.

96. *Picture Screen of Any Size.* The statute applies to apparatus ''if such apparatus * * * uses a picture screen of any size.'' We interpret the term ''use'' to mean that the apparatus works in conjunction with a picture screen. We reject the argument that Section 203 applies only to devices that include screens, as neither the statute nor the legislative history compels such a narrow construction. The original Television Decoder Circuitry Act's captioning requirement covered an apparatus only if ''its television picture screen is 13 inches or greater in size.'' The Commission previously interpreted the narrower phrase used in the Television Decoder Circuitry Act (''*its* television screen'') to permit coverage of devices that are not connected to a picture screen. In the *2000 DTV Closed Captioning Order,* the Commission explained that separating the tuning and receive function from the display function of a device is common, allows consumers to customize their systems, and should not eliminate the obligation to provide closed captioning.[82] Commenters have failed to persuade us that this reasoning should not apply here as well.[83] Moreover, we find that reading Section 203(a) to apply only to devices with built-in screens would undermine the goals of the statute, as it would exclude one of the most common

immaterial. Under current technology, there would be no way for the device manufacturer to limit captioning only for a particular type of content.

[78] In the *ACS Order,* the Commission adopted rules holding ''entities that make or produce end user equipment, including tablets, laptops, and smartphones, responsible for the accessibility of the hardware and manufacturer-provided software used for email, SMS text messaging, and other ACS. We also hold these entities responsible for software upgrades made available by such manufacturers for download by users.'' *See ACS Order,* 26 FCC Rcd at 14588–89, para. 13.

[79] This is also consistent with the *ACS Order,* which stated ''[a]dditionally, we conclude that, except for third-party accessibility solutions, there is no liability for a manufacturer of end user equipment for the accessibility of software that is independently selected and installed by the user, or that the user chooses to use in the cloud.'' *See ACS Order,* 26 FCC Rcd at 14588, para. 13. We expect, however, that to the extent that third-party software provides closed captioning support, the manufacturer will ensure that the device does not block the transmission of captioning.

[80] To the extent, in the future, there is evidence to suggest that our rule no longer ensures that the goals of the statute are met—for example, if video programming is increasingly provided using third-party software unaffiliated with both VPDs and device manufacturers—we may revisit this issue. *See ACS Order,* 26 FCC Rcd at 14586, para. 72 (''[T]he Commission will have an occasion to examine whether application of the CVAA's requirements directly to developers of consumer-installed software is warranted, and make any necessary adjustments to our rules to achieve accessibility in accordance with the intent of the CVAA.'').

[81] As noted above, our rules cover manufacturer-provided updates and upgrades to devices; thus, a device that originally included no video player but that the manufacturer requires the consumer to update or upgrade to enable video reception or play-back will be covered by our rules (our rules, of course, equally cover updates or upgrades to existing video players). Looking solely at the manufacturer's original intent, therefore, would be too narrow an approach. However, we would not hold manufacturers liable for failure to include closed captioning capability in devices manipulated or modified by consumers in the aftermarket to provide services not intended by the manufacturer.

[82] *Closed Captioning Requirements for Digital Television Receivers,* FCC 00–259, 65 FR 58467, Sept. 29, 2000 (''*2000 DTV Closed Captioning Order*'') (implementing the previous version of 47 U.S.C. 303(u)).

[83] We note that a separate provision of the CVAA provides that apparatus ''that use a picture screen that is less than 13 inches in size'' be subject to closed captioning requirements only if such requirements are ''achievable,'' 47 U.S.C. 303(u)(2)(a), but we interpret the reference to ''a picture screen that is less than 13 inches in size'' in that provision to express Congress's intent to recognize the potential difficulties of achieving compliance with respect to devices that use small screens, and do not find it to be inconsistent with the reasoning set forth above.

means by which consumers view programming. Thus, we find that it is reasonable to conclude that Congress's intent in Section 203(a) of the CVAA was to eliminate the screen-size limitation, not to narrow the classes of apparatus covered. Therefore, devices designed to work in conjunction with a screen, though not including a screen themselves, such as set-top boxes, personal computers, and other receiving devices separated from a screen must be equipped with closed caption decoder circuitry or capability designed to display closed-captioned video programming, unless that device is otherwise exempted pursuant to the limitations and exceptions described below.

97. *Technically Feasible.* Under the CVAA, the requirements of Section 203 only apply to the extent they are ''technically feasible.'' Because neither the statute nor the legislative history provides guidance as to the meaning of ''technically feasible,'' the Commission is obligated to interpret the term to best effectuate the purpose of the statute. To assist us in our analysis, we look to how the Commission in the past has interpreted this and other, similar terms in the context of accessibility for people with disabilities. For example, in the context of Section 255 of the Act, the Commission defined ''readily achievable'' to mean, in part, ''technically feasible,'' and then defined that term by rulemaking to encompass a product's technological and physical limitations.[84] The Commission further found that a requirement should not be considered technically infeasible simply because it would be costly to implement, or that it involved physical modifications or alterations to the design of a product.

98. We find that for the ''technically feasible'' qualifier to be triggered, it must be more than merely difficult to implement captioning capability on the apparatus;[85] rather, manufacturers must show that changes to the design of the apparatus to incorporate closed captioning capability are not physically or technically possible.[86] We believe that, as a general matter, if it is technically feasible for a manufacturer to include a video player in an apparatus, it is technically feasible for that manufacturer to include closed captioning functionality as well. That is, if an apparatus includes the complex functionality of a video player, which requires a relatively significant amount of processing power, it is technically feasible to include a significantly less computationally demanding functionality such as closed captioning, which requires significantly less processing power. We recognize that at least some models of apparatus of all classes that provide video in the market today—for example, televisions, set-top boxes, computers, smartphones, and tablets—also enable the rendering or pass through of closed captioning. On the strength of this marketplace evidence, we reject CTIA's argument that there is insufficient evidence that closed captioning capabilities are ''technically feasible for all mobile devices capable of video playback across a diverse IP-delivered video programming ecosystem.'' CTIA did not substantiate its claims with any specific evidence to support its claim of technical infeasibility. Thus, we find no justification in the record to exempt *all* mobile devices capable of video playback from the closed captioning requirements. If new apparatus or classes of apparatus for viewing video programming emerge on which it would not be technically feasible to include closed captioning, parties may raise that argument as a defense to a complaint or, alternatively, file a request for a ruling under § 1.41 of the Commission's rules *before* manufacturing or importing the product.

99. *Removable media players.* We decline to exclude removable media play back apparatus,[87] such as DVD and Blu-ray players, from the scope of the rule. Section 203 covers ''apparatus designed to receive or *play back* video programming transmitted simultaneously with sound.'' Section 203 of the CVAA amends Section 303(u) of the Act, which previously limited the decoder capability mandate only to those ''apparatus designed to receive television pictures broadcast simultaneously with sound.'' The phrase ''or play back'' in Section 203 makes clear that Congress no longer intended to only cover devices that receive programming. Section 203 expands the prior statutory mandate to include not only apparatus that ''receive'' programming, but also apparatus designed to ''play back'' programming, whether or not such apparatus is also capable of receiving the programming. Some commenters argue that the word ''transmitted'' indicates content that is streamed, downloaded, or broadcast via ''wire or radio,'' thus excluding such removable media devices. We are not persuaded by this argument. The reading these commenters advocate ignores Congress's use of the word ''*or,*'' and instead would require devices to both ''receive *and* play back'' video programming in order to be covered under the statute. We think the better interpretation of the word ''transmitted'' in context is that Congress's substitution of the words ''television pictures broadcast * * *'' with the corresponding words ''video programming transmitted * * *,'' while retaining the phrase ''simultaneously with sound,'' was intended to expand the scope of the statute beyond devices that receive broadcast television without narrowing the statute's prior coverage. For these reasons, we believe the better reading of the phrase ''transmitted simultaneously with sound'' in this context is to describe how the video programming is conveyed from the device (*e.g.,* DVD player) to the end user (simultaneously with sound), rather

[84] *See Implementation of Section 255 and 251(a)(2) of the Communications Act of 1934, as enacted by the Telecommunications Act of 1996,* Report and Order and Further Notice of Inquiry, 16 FCC Rcd 6417, at 6444–6445, para. 63 (1999) (''*Section 255 Report and Order*'') (''[W]hile technical infeasibility is a consideration, we agree with commenters that it does not exist merely because a particular feature has not yet been implemented by any other manufacturer or service provider. We also caution that technical infeasibility should not be confused with cost factors. In other words, a particular feature cannot be characterized as technically infeasible simply because it would be costly to implement * * *. We also agree with several commenters that technical infeasibility encompasses not only a product's technological limitations, but also its physical limitations. We note, however, that manufacturers and service providers should not make conclusions about technical infeasibility within the ''four corners'' of a product's current design. Section 255 requires a manufacturer or service provider to consider physical modifications or alterations to the existing design of a product. Finally, we agree with commenters that manufacturers and service providers cannot make bald assertions of technical infeasibility. Any engineering or legal conclusions that implementation of a feature is technically infeasible should be substantiated by empirical evidence or documentation.'').

[85] We therefore reject CEA's proposal that insufficient processor or memory, or lack of appropriate standards such as for 3D video, may make implementing captioning or a particular feature of captioning on a particular apparatus technically infeasible. Under the interpretation of technically feasible established by the Commission in the *Section 255 Report and Order,* expanding the processor or memory or developing standards for a new product such as 3D video would be technically feasible absent additional evidence demonstrating the technical barriers to doing so.

[86] Our approach to technical feasibility is also consistent with uses of that term in the direct broadcast satellite and common carrier context. *See Implementation of the Satellite Home Viewer Improvement Act of 1999: Broadcast Signal Carriage Issues/Retransmission Consent Issues,* FCC 00–417, 66 FR 7410, Jan. 23, 2001; 47 CFR 54.5; 47 CFR 51.5. We disagree with CTIA's statement that these definitions can be synthesized here to mean ''demonstrably capable of accomplishment without technical or operational concerns'' because the definitions cited herein for technical feasibility all call for overcoming technical and operational concerns when it is possible to do so.

[87] ''Removable'' media describes a form of media storage, such as DVDs and flash drives, which can be removed from a computer or other equipment while the system is running.

than describe how the video programming arrived at the device (*e.g.,* DVD player). Accordingly, we agree with the Consumer Groups and Ronald H. Vickery that the better interpretation of Section 203 is that it covers removable media play back apparatus, such as DVD players, which are commonly used by consumers to view video programming. In this regard, we note that even though not required by law, many video programs on DVDs contain closed captions, and our interpretation will ensure that those captions can be viewed.

100. Although we recognize that DVDs and other removable media often contain subtitles, we do not believe that subtitles generally meet the functional requirements necessary to accomplish the goals of the statute. Specifically, we recognize that some removable media include either subtitles or ''subtitles for the deaf and hard of hearing'' (''SDH'') in place of closed captions. Subtitles are similar to closed captions in that they display the dialogue of a program as printed words on the screen, but often do not also identify speakers and background noises, such as sound effects, or the existence of music and laughter, information that is often critically important to understanding a program's content. SDH are a version of subtitles that sometimes includes visual text to convey more than just the program's dialogue, for example, speaker identification. However, when these subtitles are viewed on removable media devices, such devices do not typically offer consumers the user controls available when closed captions are provided in accordance with the EIA–708 technical standard used for digital television programming.[88] We agree that these user control features for manipulating closed captions must be supported in all devices, including those that use removable media, and accordingly require built-in closed caption capability designed to display closed-captioned video programming in these devices in accordance with our rules.

101. *Professional and commercial equipment.* We agree with CEA that we should exclude commercial video equipment, including professional movie theater projectors, and similar types of professional equipment, from our Section 203 rules. The legislative history of the CVAA explains that Section 203(a) was intended to ''ensure[] that devices consumers use to view video programming are able to display closed captions * * *.'' We believe that based on the legislative history, Congress intended the Commission's regulations to cover apparatus that are used by consumers. Accordingly, we find that because professional or commercial equipment is not typically used by the public, it is beyond the scope of this directive. Significantly, no commenters argued that the Commission's rules should cover this equipment. We note, however, that other federal laws may impose accessibility obligations to ensure that professional or commercial equipment is accessible to employees with disabilities, or enables the delivery of accessible services.

B. Achievability, Purpose-Based Waivers, and Display-Only Monitor Exemption

102. As noted above, except for an exemption for display-only monitors, we decline to grant blanket waivers or exempt any device or class of devices from our rules as requested by several industry coalitions. Other than making broad assertions, no commenters that urge us to make such exceptions provide any technical basis or other evidence to support their contentions that certain classes of devices warranted an exemption.[89] We believe Congress intended the rules implementing Section 203 to cover a broad range of consumer devices, and we agree with the Consumer Groups that it would be inappropriate to waive the rules for broad classes of devices, many of which have already demonstrated the ability both to receive video programming and display closed captioning. In fact, the very purpose of Section 203 was to expand coverage of the original Television Decoder Circuitry Act's captioning requirement covering television sets with screens greater than 13 inches, to include consumer devices of various sizes and types (both wired and wireless), whose usage is rapidly expanding. Moreover, we lack a record on which to grant a blanket waiver or exemption for any particular model of device or class of equipment.

103. Congress, however, included two limitations in Section 203. First, for devices using screens less than 13 inches in size, only those features that are ''achievable'' must be implemented. Second, the statute provides that manufacturers may seek waivers based on the primary purpose or essential utility of the device. We will follow the model established in the *ACS Order* and take a flexible, case-by-case approach in addressing any waiver requests. As discussed below, we also implement the statute's categorical exemption for display-only monitors.

104. *Achievability.* Section 203 amends Section 303(u) of the Communications Act to require that, ''notwithstanding [the provisions of Section 303(u)(1)], apparatus described [in Section 303(u)(1)] that use a picture screen that is less than 13 inches in size [must] meet the requirements of [these regulations] only if the requirements of such subparagraphs are achievable (as defined in section 716).'' Section 716 of the CVAA defines achievability as, ''with reasonable effort or expense, as determined by the Commission'' based on four factors: (1) The nature and cost of the steps needed to meet the requirements of this section with respect to the specific equipment or service in question; (2) the technical and economic impact on the operation of the manufacturer or provider and on the operation of the specific equipment or service in question, including on the development and deployment of new communications technologies; (3) the type of operations of the manufacturer or provider; and (4) the extent to which the service provider or manufacturer in question offers accessible services or equipment containing varying degrees of functionality and features, and [those services or equipment are] offered at differing price points.

105. In the *ACS Order,* the Commission applied the Section 716 achievability standard to advanced communications services and equipment and discussed each of the four factors. There, the Commission concluded that it is appropriate to weigh each of the four factors equally, and that achievability should be evaluated on a case-by-case basis. We agree with CEA that we should adopt the same approach for closed captioning as it will provide the greatest possible flexibility for manufacturers. When faced with a complaint for violation of our rules under Section 203, a manufacturer may raise as a defense that a particular apparatus does not comply with the rules because compliance was

[88] Section 15.122 of the Commission's rules incorporates by reference EIA–708–B, ''Digital Television Closed Captioning,'' Electronics Industries Alliance (Dec. 1999) (''EIA–708–B''), which provides comprehensive instructions for the encoding, delivery, and display of closed captioning information for digital television systems. The standard provides for a larger set of captioning user options than the analog captioning standard, EIA–608, permitting users to control the size, font, color and other caption features. 47 CFR 15.122. *See also, 2000 DTV Closed Captioning Order.* As discussed below and indicated in the Final Rules, we are relocating § 15.122 to § 79.102.

[89] Granting such blanket waivers would defeat the purpose of the CVAA to expand the ability of people who are deaf or hard of hearing to access video programming on modern devices used in the twenty-first century.

not achievable under the statutory factors. Alternatively, a manufacturer may seek a determination from the Commission *before* manufacturing or importing the apparatus as to its claims that compliance with all of our rules is not achievable.[90] In evaluating evidence offered to prove that compliance was not achievable, the Commission will be informed by the analysis in the *ACS Order.* To the extent that implementation of particular aspects of closed captioning functionality is not achievable on a particular apparatus for a particular manufacturer, it does not necessarily follow that no part of our closed captioning rules is achievable for that manufacturer on that apparatus. Rather, seeking to bring as much of the captioning experience to the greatest number of consumers possible, we will treat the functional captioning requirements we discuss below as severable, and require manufacturers to seek exemptions based on the achievability of individual features.[91] We remind parties that the achievability limitation is applicable only with regard to apparatus using screens less than 13 inches in size. For apparatus that use a screen size that is 13 inches or larger, a manufacturer may seek relief from the Commission based on a showing of technical infeasibility, which applies to apparatus of any size.[92]

106. *Purpose-Based Waivers.* Section 203 grants the Commission the discretion to waive the requirements of Section 203 for any apparatus or class of apparatus that are ''*primarily designed* for activities other than receiving or playing back video programming transmitted simultaneously with sound'' or ''for equipment designed for multiple purposes, capable of receiving or playing video programming transmitted simultaneously with sound but whose *essential utility* is derived from other purposes.'' The statute does not define ''primarily designed,'' nor does it define ''essential utility'' except to state that it may be derived from more than one purpose. Both the House and Senate Committee Reports state that waiver under these provisions is available ''where, for instance, a consumer typically purchases a product for a primary purpose other than viewing video programming, and access to such programming is provided on an incidental basis.'' We expect that such waiver requests will be highly fact specific and unique to each device presented. Accordingly, we will address any waivers under these sections on a case-by-case basis. We expect that, over time, the Commission will develop a body of precedent that will prove instructive to manufacturers and consumers alike.

107. Based on our analysis above, we reject the broad, unspecific requests made by several commenters. CTIA, for example, requests that all mobile devices be exempted from these regulations until such time as the market for video to mobile devices ''becomes stable,'' and in order to promote the growth of the mobile video market. We decline to do so here, as the mobile marketplace is incredibly diverse, and while the above assertion may be true for a particular device, it is unsupported with regard to the entire mobile industry. TechAmerica requests that the Commission ''exercise its waiver authority freely,'' and grant blanket waivers to smartphones ''as their essential utility is to function as a communications device,'' and to consider similar treatment for tablets. We disagree, as TechAmerica's request conflates the primary purpose waiver standard for single-purpose devices with incidental video capability and the essential utility standard, under which both communications and viewing video programming may be purposes which comprise a device's essential utility. Further, TechAmerica makes a sweeping request, asking the Commission to view all smartphones equivalently, which as we discuss above, does not comport with the fact-based, case-by-case approach we adopt. In addition, TechAmerica's request is in opposition to notable marketplace evidence that many mobile devices already support captioning. TIA comments that the Commission should grant broad, categorical waivers, in an effort to give manufacturers certainty, to ''gaming consoles, cellular telephones, and tablets.'' Based on our reasoning above, we find that this request too is overbroad and lacks the facts and circumstances necessary to grant a waiver. Nevertheless, we reiterate that these waivers are available prospectively, for manufacturers seeking certainty prior to the sale of a device.[93]

108. *Display-Only Monitor Exemption.* Section 203(a)(2)(B) states that ''any apparatus or class of apparatus that are display-only video monitors with no playback capability are exempt from the requirements'' to implement closed captioning. We conclude this requirement is self-explanatory and that in most instances the operation of this provision will be clear. Accordingly, we incorporate the language of the statutory provision directly into our rules. Consumer Groups proposed that we define display-only monitors as monitors that are dependent on another device subject to our closed captioning rules. This proposed definition is too narrow, however, because it fails to account for display-only monitors that work in conjunction with devices not subject to our closed captioning rules, such as commercial video equipment. CEA suggested that devices that can accept ''only a baseband or uncompressed video stream,''[94] such as many computer monitors, are appropriately classified as display-only monitors. This definition is also too narrow, because a monitor could conceivably accept a compressed video stream and still be considered a display-only monitor. We therefore decline to adopt these qualifications. To the extent a manufacturer would like a Commission determination as to whether its device qualifies for this exemption it may make such a request.[95]

C. Display of Captions

109. Section 203 of the CVAA requires that the Commission's rules ''provide performance and display standards for such built-in decoder circuitry or capability designed to display closed captioned video programming * * *.'' We adopt functional requirements that will ensure that consumers' online captioning experience is equivalent to their television captioning experience. When

[90] Any such requests should follow the procedures for an informal request for Commission action pursuant to § 1.41 of our rules and the requirements of § 79.103(b)(3). 47 CFR 1.41, Final Rules § 79.103(b)(3).

[91] For example, we can envision that in certain circumstances it may not be achievable to implement variable opacity for captions or the caption background on specific devices, but it would nevertheless be achievable to implement the ability to change the caption color and the font size over an opaque or transparent background, depending on the specific capabilities and characteristics of a device's screen and processing power.

[92] *See* 47 CFR 1.41 (Informal requests for Commission action).

[93] *See* 47 CFR 1.41 (Informal requests for Commission action).

[94] A ''baseband signal'' is defined as ''transmission of a digital or analog signal at its original frequencies, *i.e.,* a signal in its original form, not changed by modulation.'' *See* H. Newton, *Newton's Telecom Dictionary* 101 (20th ed. 2004). An ''uncompressed signal'' is a signal that has not been compressed. ''Compression'' is defined as ''the art and science of squeezing out unneeded information in a picture, or a stream of pictures (a movie) or sound before sending or storing it.'' *See* H. Newton, *Newton's Telecom Dictionary* 199 (20th ed. 2004).

[95] A manufacturer may seek a Commission declaration that a monitor is exempt under this provision pursuant to § 1.41 of the Commission's rules. *See* 47 CFR 1.41.

the Commission adopted the digital closed captioning standards, it noted the ''substantial benefits for consumers'' that are provided when video programming apparatus support user options that enable closed caption displays to be customized to suit the needs of individual viewers. For example, the Commission explained that ''the ability to alter colors, fonts, and sizes * * * can benefit a person with both a hearing disability and a visual disability in a way not possible with the current analog captions.'' After also noting the benefits that adjustable caption sizes can afford younger children learning how to read, the Commission concluded that ''[o]nly by requiring decoders to respond to these various features can we ensure that closed captioning will be accessible for the greatest number of persons who are deaf and hard of hearing, and thereby achieve Congress's vision that to the fullest extent made possible by technology, people who are deaf and hard of hearing have equal access to the television medium.'' More than a decade ago, consumers urged the Commission to ''ensure that the promised benefits of [DTV] actually accrue to persons who are deaf, late deafened, hard of hearing or deaf-blind'' and to create a ''level viewing field'' through the adoption of the EIA–708 captioning standard.[96] Most recently, the Consumer Groups reiterated that the Commission should consider ways to ensure that caption users are able to benefit from advanced technologies in designing our rules for apparatus to have captioning capability under Section 203.

110. To assist the Commission in interpreting this provision, Congress directed the VPAAC to identify ''performance requirement[s] for protocols, technical capabilities, and technical procedures needed to permit content providers, content distributors, Internet service providers, software developers, and device manufacturers to reliably encode, transport, receive, and render closed captions of video programming * * * delivered using Internet protocol.'' The VPAAC Report identifies the rules, technologies, and procedures necessary to provide consumers with a captioning experience equivalent to the experience provided when the content was aired on television using the CEA–608/708 standard.[97] Specifically, the VPAAC identified four components that make up the television ''caption experience,'' seven technical requirements necessary to implement that experience, and a list of optional best practices that may be implemented to deliver the highest possible captioning experience.

111. The VPAAC identified the four components of the captioning ''experience'' as:

- The presentation format of the captioning; *e.g.,* within or on separate caption ''windows,'' text that appears all at once (pop-on), text that scrolls up as new text appears (roll-up), or the display of each new letter or word as it arrives (paint-on);
- Semantically significant formatting, such as italics, colors, and underlining;
- The timing of the presentation of caption text with respect to the video; and
- The consumer's ability to control the caption display, including the ability to turn it on and off, and to select font sizes, styles, and colors, and background color and opacity.

The VPAAC further identified specific technical requirements as necessary to implement the captioning experience detailed in the VPAAC Report:

- Support for displaying fonts in the full CEA–708 64-color palette and allowing users to override the default font color with one of the eight standard caption colors.
- Support for users to vary character opacity between at least three settings, including opaque (100% opacity) and semi-transparent (at 75% or 25% opacity);
- Support for the various font types contained in CEA–708 as well as the ability for users to assign fonts from the selection included with their device to each of these default fonts;
- Support for displaying the caption background in the full CEA–708 64-color palette and allowing users to override the default caption background color with one of the eight standard colors, and support for users to vary the caption background opacity between at least four settings, opaque (100% opacity), semi-transparent (at 75% or 25% opacity), and transparent (0% opacity);
- Support for character edge attributes including: none, raised, depressed, uniform, or drop shadowed;
- Support for displaying the caption window in the full CEA–708 64-color palette and allowing users to override the default caption background window with one of the eight standard colors, and support for users to vary the caption window opacity between at least four settings, opaque (100% opacity), semi-transparent (at 75% or 25% opacity), and transparent (0% opacity);
- Support for selecting among multiple language tracks, where available, and a requirement that simplified or reduced caption text be identified as such or as ''easy reader'' captions.

Additionally, the VPAAC Report states that video player tools must permit the user to preview setting changes, remember settings between viewing sessions, and provide the ability to turn captions on and off as easily as muting the audio or adjusting the volume.

112. The VPAAC Report represents the consensus view of a wide, diverse cross-section of the industry and consumer interests. Therefore, their consensus approach to these issues provides a compelling guide for our actions here. Specifically, based on the consensus view that online captioning must, at minimum, replicate the television experience, and absent any guidance in the statute or legislative history, and absent any comment on the record indicating that some other goal should be used, we adopt that goal as the Commission's goal here. However, we find that we need not specifically incorporate into our rules all four components of the captioning experience detailed in the VPAAC Report. Instead, we find that all but one of the components is subsumed in the specific technical requirements also set forth in the VPAAC Report. First, we find that the second and fourth components, support for semantically significant formatting and control of caption appearance, are encompassed by and expanded on by the seven technical requirements. Therefore, to avoid redundancy, we do not include them in our rules. We find that it is inappropriate to include the third component of the experience, addressing the timing of captions with video, here. We conclude that ensuring that timing data is properly encoded and maintained through the captioning interchange and delivery system is an obligation of Section 202 VPDs, and not of device manufacturers.[98] Therefore,

[96] Reply Comments of Telecommunications for the Deaf, Inc., *Closed Captioning Requirements for Digital Television Receivers,* ET Docket No. 99–254 at 2–3 (filed Nov. 15, 1999).

[97] *See* VPAAC Report at 13. CEA–608 is the technical standard used for analog closed captioning, and CEA–708 is technical standard for digital closed captioning. *See* Final Rules 47 CFR 79.101 (previously 47 CFR 15.119, CEA–608), 79.102 (previously § 15.122, CEA–708) for the current captioning requirements, respectively.

[98] The VPAAC Report expands on the timing requirements, explaining, ''all processing through the distribution chain, including transcoding, must provide a timing experience that is equal to or an improvement to the timing of captions provided in the captioning shown on television.'' VPAAC Report at 14. We find that this direction from the VPAAC Report places no responsibility on device manufacturers, and so we do not include any such requirement in our rules for devices.

we incorporate into our rules the first component of the caption experience, the presentation of captions on the screen, as a discrete rule in addition to the seven technical requirements.[99]

113. We believe that by incorporating the precise language of the VPAAC Report, we will ensure that manufacturers will clearly understand their obligations regarding the features they are required to implement and support. The *NPRM* proposed to incorporate into our rules these functionality requirements in a slightly simplified form and without specifying the exact nature of the support for each requirement. Some commenters advocate that we adopt rules that merely state that captioning should be ''functionally equivalent'' to that on television. AT&T contends that the *NPRM*'s proposed rules were too specific and should be more flexible. CEA, however, argues that a mandate of ''at least the same quality'' as television would be ambiguous, preferring instead that the Commission adopt minimum technical requirements that will help ensure functional equivalency, preserve flexibility, and provide certainty to manufacturers. In the context of Section 203 of the CVAA, we are persuaded by CEA's argument and find that it is necessary to adopt a set of specific minimum functional requirements rather than the simplified language of the *NPRM.* By doing so, we believe that we will make it easier for manufacturers to determine how to comply with our rules as well as facilitate the ability of the Commission to evaluate compliance in the event of a complaint. We agree with Consumer Groups that the record contains no evidence that specifying what functions devices must implement will negatively impact the ability of captions to be delivered to those devices. CTIA expresses concern that some features will not be supportable on devices with limited screen sizes, low resolutions, or limited processing. However, as discussed above, parties can seek relief for any features that they believe can not be implemented.[100]

D. Recording Devices

114. In addition to devices that consumers use to directly view video programming, those that record video programming must also have closed-captioning capability. Specifically, Section 203(b) of the CVAA directs the Commission to ''require that, if achievable * * *, apparatus designed to record video programming transmitted simultaneously with sound, * * * [must] enable the rendering or the pass through of closed captions * * *.'' Commenters largely did not address recording devices, except to caution the Commission against regulating the subcomponents of recording devices, rather than the devices themselves. Therefore, we adopt the proposal in the *NPRM* to incorporate the statutory language of Section 203(b) directly into our rules. Consistent with our discussion above, we expect identifying apparatus designed to record to be straightforward. We note that when devices such as DVD, Blu-ray, and other removable media recording devices are capable of recording video programming, they also qualify as recording devices under Section 203(b) and therefore must enable viewers to activate and de-activate the closed captions as video programming is played back.

E. Interconnection Mechanisms

115. Section 203(b) of the CVAA directs the Commission to require that ''interconnection mechanisms and standards for digital video source devices are available to carry from the source device to the consumer equipment the information necessary to permit or render the display of closed captions and to make encoded video description and emergency information audible.''[101] The NPRM sought comment on how to implement this provision. Based on the record at this time, we conclude that current interconnection mechanisms satisfy the requirements of the CVAA, and clarify that the statute requires manufacturers to implement closed captioning on every video output of a covered device. Thus, we adopt a rule requiring that all video outputs of covered apparatus shall be capable of conveying from the source device to the consumer equipment the information necessary to permit or render the display of closed captions. As discussed below, we find that it is sufficient, for purposes of this provision, if the video output of a digital source device renders the closed captioning in the source device. Accordingly, we find that the manner in which the HDMI connection carries captions satisfies the statutory requirement for interconnection mechanisms. At the same time, however, we note that other interconnection mechanisms, such as MoCA and DLNA, currently support the pass-through of closed captions to consumer display devices and we encourage this practice. Although we do not impose any additional regulations on interconnection mechanisms at this time, we note that we are interpreting an ambiguous statutory provision and, although we believe our interpretation is reasonable based on the record before us, we may revisit the issue if we find that our decision, in practice, does not provide the benefits to consumers that were intended by Congress.

116. As the statute states, ''interconnection mechanisms'' carry information from source devices to consumer equipment. Interconnection mechanisms consist of an output, a transmission path, and an input. We generally refer to these mechanisms by their output standard or the cable or cord they utilize, such as ''coaxial cable,'' ''Ethernet,'' or ''HDMI.'' In discussing how to implement this statutory mandate, commenters predominantly focus on one particular digital output, the HDMI connector. HDMI is the preeminent audio-video interconnection standard used by manufacturers to enable uncompressed video signals to be carried from a source device (such as an MVPD set-top box) to consumer equipment (such as a television).[102] Industry commenters explain that with respect to the HDMI connector, ''the captions and video are decoded in the source device and carried as *opened* captions to the display, which acts only as a monitor.'' When captions are transmitted in an ''open'' manner, such as is the case with HDMI, they are ''rendered'' by the source device, embedded (decoded and mixed) into the video stream, then carried by the HDMI connector to the receiving device in a manner that does not allow the consumer to access or utilize the captioning decoding and rendering functionality of the receiving device. When captions are ''closed,'' they are transmitted as data alongside the video stream, and permit consumers to access and utilize the captioning

[99] We find it necessary to make a small change to the text regarding presentation of captions. As the VPAAC Report describes the experience as requiring the use of one of the presentation styles, where no more than one style is in use at a time, it delimits the list with an ''or.'' VPAAC Report at 13. However, manufacturers must support all three styles in order to enable such choice, and therefore our rule delimits the list with an ''and.'' Final Rules 47 CFR 79.103(c)(1).

[100] Section 203 requires manufacturers only to implement captioning to the extent that it is technically feasible. Moreover, for small-screen devices, manufacturers need only include those features that are achievable. Finally, pursuant to Section 202, VPDs may seek exemptions if complying with any of these requirements would be economically burdensome.

[101] The portions of 303(z)(2) which deal with video description and emergency information will be implemented separately by the Commission, 18 months after the submission of a separate VPAAC Report. *See* Public Law 111–260, sec. 203(d)(2).

[102] HDMI stands for ''High Definition Multimedia Interface.'' Over 2 billion HDMI equipped devices have been deployed worldwide.

functionality of the receiving device. Set-top boxes with standard definition analog outputs are generally capable of passing closed captions to consumer equipment for decoding and display by that device. However, high-definition analog outputs and HDMI were not developed with this capability, and as consumers increasingly transition to high-definition video sources and digital interconnection, standard definition analog outputs are declining in use. As a result, if an HDMI or high definition analog connection is being used, consumers must use their set-top box's closed captioning functionality rather than the functionality contained in their television or continue to watch video programming in standard definition.

117. The question is thus whether the manner in which the HDMI connector carries captions satisfies the statutory requirement. For the reasons stated below, we conclude that it does. We find the CVAA's requirement that interconnection mechanisms be ''available to carry from the source device to the consumer equipment the information necessary to permit or render the display of closed captions'' to be ambiguous. The statute does not expressly address what is meant by information necessary to ''permit'' the display of closed captions or information necessary to ''render'' the display of closed captions.'' In context, we interpret the language requiring carriage of information to ''render'' the display of closed captions to require that the interconnection mechanism carry the requisite data to allow caption functionality in the receiving device. In other words, the source device transmits captions in a closed manner to the receiving equipment (*e.g.,* a television set), which is capable of performing the rendering of the captions for display. The use of the phrase ''*or* permit'' indicates an alternative means by which an interconnection device may satisfy the statute. Read in context, we believe Congress intended to give the term ''permit'' a different meaning than the term ''render.'' We thus interpret the alternative requirement to ''permit'' the display of closed captions to mean that the interconnection mechanism may carry the information necessary for the rendered captions to be displayed on the receiving device, without regard to the receiving device's caption functionality. We believe that our interpretation is reasonable because we give effect to Congress's use of the disjunctive ''or,'' and because our interpretation achieves the statutory purpose of ensuring consumer access to closed captions. Based on this interpretation, we find that rendering captions in the source device, then transmitting the captions in an open manner to the receiving device, such as in the case of HDMI, satisfies the statute because caption text is viewable on the video programming. Further, we conclude that the availability of closed captioning should not be limited to particular outputs, as consumers should not be limited in their viewing of content due to the lack of closed captioning support on a particular output.

118. Although many consumers may prefer to use the closed captioning features of their display devices, we believe there are other considerations, raised in the record, that support our reading of the statute. The record shows that it may be impractical to require all interconnection mechanisms, including HDMI, to pass-through the closed captions to receiving equipment given commenters' concerns about the time and expense associated with such a requirement. Our interpretation provides flexibility for manufacturers and avoids unnecessary burdens, while at the same time we believe it fulfills the statutory purpose of ensuring access to closed captions. Moreover, although we recognize that some consumers have had frustrations with using the caption functionality in the source device, as HDMI Licensing notes, this is not an issue related to the HDMI interface, but rather caused by poor implementation in some set-top boxes. In this regard, we note that all apparatus, including set-top boxes, are subject to the performance rules we adopt today. We also note that the CVAA contains provisions to address the difficulty consumers face in enabling closed captioning on source devices.[103] Together, technologies like HDMI Consumer Electronics Control (or CEC) and Commission implementation of the statutory provision requiring that ''built in access to * * * closed captioning [be available through] a mechanism that is reasonably comparable to a button, key, or icon'' may result in the resolution of at least one source of consumer complaints. The record also shows that there are at least two interconnection mechanisms currently available in the market that already support caption functionality in receiving devices.

119. In reaching our conclusion, we also note that the problems some consumers discussed in the record relating to HDMI may be ameliorated by the fact that all cable operator-provisioned HD set-top boxes are currently required to include a connection capable of delivering recordable HD video and closed captioning data in a closed manner. In addition, although we refrain from requiring pass-through of closed captioning on HDMI, we recognize the widespread consumer reliance on HDMI and therefore we encourage HDMI Licensing, the HDMI specification licensing agent, to include closed captioning provisions in future versions.[104]

F. Changes to Television Rules and Movement of Device Rules to Part 79

120. Section 203 of the CVAA replaces Section 303(u) of the Act,[105] which originally gave the Commission authority to require closed captioning on television receivers with a screen size 13 inches or greater. Under the revised provision, our television closed captioning rules are no longer limited to apparatus with screen sizes 13 inches or greater, though those with smaller screen sizes are required to comply only if compliance is achievable. As proposed in the *NPRM,* we will revise our television captioning rules accordingly. Additionally, as proposed in the *NPRM,* we will relocate the closed captioning device rules, §§ 15.119 and 15.122, and their associated incorporations by reference, into Part 79 of the Commission's rules, which will also list the obligations of owners, providers, and distributors of video programming adopted pursuant to Section 202 of the CVAA.[106]

[103] *See* Public Law 111–260, secs. 204 (User interfaces on digital apparatus), 205 (Access to video programming guides and menus provided on navigation devices).

[104] We recognize that HDMI was designed for a purpose other than carrying encoded information. We also note, however, that HDMI has already been modified to provide a data connection capable of transmitting encoded data between devices. See Frequently Asked Questions for HDMI 1.4, *http://www.hdmi.org/manufacturer/hdmi_1_4/hdmi_1_4_faq.aspx.* In addition, HDMI Licensing acknowledges that the HDMI standard could be updated to include this functionality within about three years.

[105] 47 U.S.C. 303(u). Section 203(b) of the CVAA also adds a new Section 303(z) to address recording devices and interconnection mechanisms. 47 U.S.C. 303(z). Further, Section 203(c) of the CVAA revises Section 330(b) to address Sections 303(u) and (z), to provide authority for performance and display standards, and to address video description. 47 U.S.C. 330(b).

[106] Part 15 of the Commission's rules requires devices to be authorized prior to the initiation of marketing, either through the Verification process or through a Declaration of Conformity or Certification. *See* 47 CFR 15.101, *et seq.* However, those rules are concerned only with the device's performance as an unintentional radiator into the radio-frequency spectrum. Since closed-captioning functionality exists separately from the RF receiving and tuning functionality of a device, and new IP-

Continued

G. Alternate Means of Compliance

121. Section 203(e) of the CVAA provides that ''an entity may meet the requirements of Sections 303(u), 303(z), and 330(b) of the [Act] through alternate means than those prescribed by regulations * * * if the requirements of those sections are met, as determined by the Commission.'' Therefore, parties may meet all of the requirements we discuss in sections IV and V of this *Report and Order,* as well as our existing rules regarding television receivers and converter boxes, via alternate means. Should an entity seek to use an ''alternate means'' to comply with the applicable requirements, that entity may either (i) request a Commission determination that the proposed alternate means satisfies the statutory requirements through a request pursuant to § 1.41 of our rules; or (ii) claim in defense to a complaint or enforcement action that the Commission should determine that the party's actions were permissible alternate means of compliance. Rather than specify what may constitute a permissible ''alternate means,'' we conclude that the best means of implementing this provision is to address any specific requests from parties when they are presented to us.

H. Deadlines for Compliance

122. We conclude that two years is the appropriate amount of time to design and implement the functionality required by Section 203 of the CVAA, as discussed in Section IV of this *Report and Order,* and to bring that functionality to market. The CVAA does not specify the time frame by which the Section 203 requirements must become effective, but nearly all commenters who addressed the issue support a two-year implementation period. As the Commission has repeatedly determined, manufacturers generally require approximately two years to design, develop, test, manufacture, and make available for sale new products. Accordingly, we establish a compliance date for covered devices of January 1, 2014. We agree with Consumer Groups that incorporating captioning functionality later in the design cycle of a feature-rich device may prove more difficult than implementing such functionality at the commencement of design. Although the compliance deadline is two years away, consistent with the *ACS Order,* beginning on the effective date of these regulations, *i.e.,* 30 days after the date this *Report and Order* and rules are published in the **Federal Register**, we expect manufacturers to take accessibility into consideration as early as possible during the design process for new and existing equipment and to begin taking steps to bring closed captioning to consumers as required by our rules.

I. Complaints

123. Consistent with prior Commission practice and the Commission's television and IP closed captioning complaint rules, we adopt the following procedures for the filing of written complaints alleging violations of the Commission's rules requiring apparatus designed to receive, play back, or record video programming to be equipped with built-in closed caption decoder circuitry or capability designed to display closed-captions. Such complaints should include the following information:[107] (a) The name, postal address, and other contact information of the complainant, such as telephone number or email address; (b) the name and contact information, such as postal address, of the apparatus manufacturer or provider; (c) information sufficient to identify the software or device used to view or to attempt to view video programming with closed captions; (d) the date or dates on which the complainant purchased, acquired, or used, or tried to purchase, acquire, or use the apparatus to view closed captioned video programming; (e) a statement of facts sufficient to show that the manufacturer or provider has violated or is violating the Commission's rules; (f) the specific relief or satisfaction sought by the complainant; and (g) the complainant's preferred format or method of response to the complaint.[108] A written complaint filed with the Commission must be transmitted to the Consumer and Governmental Affairs Bureau through the Commission's online informal complaint filing system, U.S. Mail, overnight delivery, or facsimile.[109] The Commission may forward such complaints to the named manufacturer or provider, as well as to any other entity that Commission staff determines may be involved, and may request additional information from any relevant parties when, in the estimation of Commission staff, such information is needed to investigate the complaint or adjudicate potential violations of Commission rules. After the closed caption decoder rules adopted in this *Report and Order* become effective, the Consumer and Governmental Affairs Bureau will release a consumer advisory with instructions on how to file complaints in various formats, including via the Commission's Web site.[110]

V. Technical Standards for IP–Delivered Video Programming

124. For the reasons set forth below, we adopt the Society of Motion Picture and Television Engineers (''SMPTE'') Timed Text format (SMPTE ST 2052–1:2010: ''Timed Text Format (SMPTE–TT)'' 2010) (''SMPTE–TT'') as a safe harbor interchange and delivery format. Section 202 of the CVAA requires that the Commission describe the responsibilities of video programming providers or distributors and video programming owners. Section 203 of the CVAA requires that the Commission's rules ''provide performance and display standards for such built-in decoder circuitry or capability designed to display closed captioned video programming * * *.'' We believe to best implement these statutory provisions, it is necessary to establish a safe harbor standard. IP-delivered video programming currently uses multiple closed captioning formats. In contrast, the Commission requires CEA–608 as the technical standard for analog television closed captioning, and CEA–708 as the technical standard for digital television closed captioning. As no such Commission requirement exists for IP closed captioning, parties must agree on

based devices may not include receivers of the type Part 15 regulates, we find it unnecessary to require a Declaration of Conformity or Certification regarding the closed-captioning functionality of the devices we cover here, or to trigger certification or verification for a device solely because it includes closed-captioning functionality. We therefore find it inappropriate to continue to house these rules in Part 15. Of course, to the extent that a Section 203 device is otherwise covered by Part 15, that device must continue to comply with the Commission's rules in Part 15.

[107] We recognize that some of the requested information may not be readily ascertained by consumers, such as the contact information of the apparatus manufacturer. Accordingly, we provide that complaints should (but are not required to) include the specified information. The Commission will best be in a position to investigate complaints that include the maximum information requested.

[108] The complainant's preferred format or method of response may be by letter, facsimile transmission, telephone (voice/TRS/TTY), email, or some other method that would best accommodate the complainant.

[109] We clarify that, if a complainant calls the Commission for assistance in preparing a complaint (by calling either 1–888–CALL–FCC or 1–888–TELL–FCC (TTY)), and Commission staff documents the complaint in writing for the consumer, that constitutes a written complaint.

[110] The Commission further directs the Consumer and Governmental Affairs Bureau to revise the existing complaint form for disability access complaints (Form 2000C) in accordance with this *Report and Order,* to facilitate the filing of closed caption decoder complaints. Should the closed caption decoder rules adopted in this *Report and Order* become effective before the revised Form 2000C is available to consumers, closed caption decoder complaints may be filed in the interim by fax, mail, or email.

both an interchange format, in which the VPO sends a caption file to the VPD, and a delivery format, in which the VPD sends captions to an apparatus on which the end user views video programming if captions are to be usable by the receiving party.

125. The VPAAC proposed that the Commission require a single standard interchange format so that video programming does not need to be re-captioned to comply with different standards. The VPAAC proposed SMPTE–TT as the standard interchange format. For the delivery format, if a VPD is not affiliated with the manufacturer of the device on which the consumer views video programming, the VPAAC also recommended the use of SMPTE–TT.[111] The VPAAC recommended using the SMPTE–TT standard in each case because it ''best meets all the requirements'' established by the participants on the VPAAC and because it ''is already being employed in production environments to repurpose television content for Internet use.'' In the *NPRM,* contrary to the VPAAC's proposal, the Commission proposed not to adopt a specific interchange format, in an effort to foster technological innovation. The *NPRM* additionally sought comment on whether the Commission should require a particular delivery format. In response, a number of commenters argue that the Commission should specify SMPTE–TT as the mandatory interchange format. For both the interchange and delivery format, several commenters propose various safe harbor approaches, under which use of SMPTE–TT as the interchange and/or delivery format would be deemed compliant. Among the asserted benefits of adopting SMPTE–TT as a safe harbor interchange format is that it would minimize the need for VPOs to author multiple standards and potentially re-caption programming. Similarly, CEA argues that ''where IP-delivered video content is rendered by a consumer device using a standardized video player * * * a single minimum delivery format ensures that a manufacturer of such apparatus can readily support and render IP captions.'' Further, unlike adopting SMPTE–TT as the mandatory interchange or delivery format, commenters explain that a safe harbor approach would balance goals of efficiency, certainty, and consumer access with needed flexibility to continue to innovate.[112]

126. Although some commenters advocate that we not specify an interchange or delivery format, a large number of commenters from all segments of the industry argue that the complete absence of a standard would hinder the deployment of IP closed captioning because parties would lack certainty as to what is expected. In addition to the VPAAC's endorsement of the SMPTE–TT standard, many commenters confirm the benefits of SMPTE–TT, and the industry does not seem to have coalesced around any other standard in such a manner. We find that the safe harbor approach for use of SMPTE–TT as the interchange and delivery standard, as numerous commenters propose, would provide certainty while enabling the industry to continue to innovate and permitting parties to agree to use an alternative standard. To use a different standard, parties would not need to first request Commission approval. We note, however, where use of an alternate standard results in noncompliant captions, both parties may be held responsible for violation of our rules. The flexibility in such a safe harbor approach will address many of the concerns expressed by parties against the adoption of a particular standard, because the parties will retain the option of using an alternative standard if that standard better meets their needs and achieves the required result. For all of the above reasons, we adopt SMPTE–TT as a safe harbor interchange and delivery format. Thus, we will provide in our rules that if a VPO provides captions to a VPD using the SMPTE–TT format, then the VPO has fulfilled its obligation to deliver captions to the VPD in an acceptable format. We will also provide in our rules that devices that implement SMPTE–TT will be deemed in compliance with our rules, while simultaneously allowing devices to achieve the same functionality without implementing that standard.[113] We intend to monitor the marketplace and, to the extent that additional open standards from recognized industry standard-setting organizations appear appropriate, we will consider incorporating those standards into our rules as additional safe harbors.

VI. Procedural Matters

A. Final Regulatory Flexibility Analysis

127. As required by the Regulatory Flexibility Act of 1980, as amended (''RFA''), the Commission has prepared the following Final Regulatory Flexibility Analysis (''FRFA'') relating to this *Report and Order* in MB Docket No. 11–154. An Initial Regulatory Flexibility Analysis (''IRFA'') was incorporated in the *NPRM* in this proceeding. The Federal Communications Commission (''Commission'') sought written public comment on the proposals in the *NPRM,* including comment on the IRFA. The Commission received no comments on the IRFA, although some commenters discussed the effect of the proposals on smaller entities, as discussed below. This present Final Regulatory Flexibility Analysis (''FRFA'') conforms to the RFA.

Need for, and Objectives of, the Report and Order

128. Pursuant to our responsibilities under the Twenty-First Century Communications and Video Accessibility Act of 2010 (''CVAA''), this *Report and Order* adopts rules governing the closed captioning requirements for the owners, providers, and distributors of video programming delivered using Internet protocol (''IP''). This *Report and Order* also adopts rules governing the closed captioning capabilities of certain apparatus on which consumers view video programming. Closed captioning is the visual display of the audio portion of video programming, which provides access to individuals who are deaf or hard of hearing. Prior to the adoption of the CVAA, the Communications Act of 1934, as amended (the ''Act''), required the use of closed captioning on

[111] The VPAAC Report separates delivery of content where parties are affiliated and unaffiliated. Where parties are affiliated by contract or ownership, the VPAAC report determined that no standard-setting by the Commission was advisable. Where delivery is between unaffiliated parties, creation of a relationship may be more burdensome than adopting the recommendations of the Commission for exchanging captioning data.

[112] We note that some commenters propose a variation on the safe harbor approach, under which the Commission would deem compliant the use of a standard adopted in an open process by a recognized industry standard-setting organization, without specifying the format. TWC proposes another alternate approach to the interchange format, by which the Commission would specify functions that captions must support rather than specifying standards. At this time, we decline to adopt any of the proposed alternative approaches, as we find that the adoption of SMPTE–TT as a safe harbor interchange and delivery format best provides the industry with both clarity and flexibility.

[113] When implementing SMPTE–TT as a means of being deemed in compliance with the requirements for captioning functionality, we expect manufacturers will look to the practices of the industry, especially when standardized or adopted by an industry body, such as the recommended practice for conversion of CEA–608 data to SMPTE–TT to determine the reasonable extent to which features must be supported. *See* Society of Motion Picture Television Engineers recommended practice ''Conversion from CEA–608 Data to SMPTE–TT,'' RP 2052–10–2010 (2010). We expect a similar recommended practice regarding the conversion of CEA–708 data to SMPTE–TT to be developed.

television, but not on IP-delivered video programming that was not part of a broadcaster or multichannel video programming distributor (''MVPD'') service. That changed with the enactment of the CVAA, which directed the Federal Communications Commission (''Commission'') to revise its regulations to require closed captioning of IP-delivered video programming that is published or exhibited on television with captions after the effective date of the new regulations. Further, the CVAA directed the Commission to impose closed captioning requirements on certain apparatus that receive or play back video programming, and on certain recording devices. The rules we adopt herein will better enable individuals who are deaf or hard of hearing to view IP-delivered video programming, as Congress intended. Moreover, we believe these benefits of our rules to deaf or hard of hearing consumers will outweigh the affected entities' costs of compliance.

129. As discussed in Section III of the *Report and Order,* we adopt the following closed captioning requirements for the owners, providers, and distributors of IP-delivered video programming under Section 202(b) through (c) of the CVAA. Specifically, we adopt rules that will:

- Specify the obligations of entities subject to Section 202(b) by:
  - Requiring video programming owners (''VPOs'') to send required caption files for IP-delivered video programming to video programming distributors and providers (''VPDs'') along with program files;
  - Requiring VPDs to enable the rendering or pass through of all required captions to the end user, including through the hardware of software that a VPD makes available for this purpose;
  - Requiring VPOs and VPDs to agree upon a mechanism to make available to VPDs information on video programming that is subject to the IP closed captioning requirements on an ongoing basis; and
  - Requiring VPOs to provide VPDs with captions of at least the same quality as the television captions for the same programming, and requiring VPDs to maintain the quality of the captions provided by the VPO.
- Create a schedule of deadlines under which:
  - All prerecorded programming that is not edited for Internet distribution and is subject to the new requirements must be captioned if it is shown on television with captions on or after the date six months after publication of these rules in the **Federal Register**;
  - All live and near-live programming subject to the new requirements must be captioned if it is shown on television with captions on or after the date 12 months after publication of these rules in the **Federal Register**;
  - All prerecorded programming that is edited for Internet distribution and is subject to the new requirements must be captioned if it is shown on television with captions on or after the date 18 months after publication of the rules in the **Federal Register**; and
  - Archival content must be captioned according to the following deadlines: Beginning two years after publication of these rules in the **Federal Register**, all programming that is subject to the new requirements and is already in the VPD's library before it is shown on television with captions must be captioned within 45 days after it is shown on television with captions. Beginning three years after publication of these rules in the **Federal Register**, such programming must be captioned within 30 days after it is shown on television with captions. Beginning four years after publication of these rules in the **Federal Register**, such programming must be captioned within 15 days after it is shown on television with captions.
- Craft procedures by which VPDs and VPOs may petition the Commission for exemptions from the new requirements based on economic burden;
- Not treat a *de minimis* failure to comply with the new rules as a violation, and permit entities to comply with the new requirements by alternate means, as provided in the CVAA; and
- Adopt procedures for complaints alleging a violation of the new requirements.

130. In addition, we adopt the following closed captioning requirements for the manufacturers of devices used to view video programming under Section 203 of the CVAA. Specifically, we adopt rules that will:

- Establish what apparatus are covered by Section 203:
  - All physical devices designed to receive and play back video programming, including smartphones, tablets, personal computers, and television set-top boxes;
  - All ''integrated software'' in covered devices (that is, software installed in the device by the manufacturer before sale or that the manufacturer requires the consumer to install after sale); and
  - All recording devices and removable media players;
- Exclude professional and commercial equipment from the scope of Section 203;
- Exempt display-only monitors as set forth in Section 203, and establish procedures for finding a lack of achievability or technical feasibility;
- Establish the requirements for devices covered by Section 203:
  - Specify how covered apparatus must implement closed captioning by adopting functional display standards;
  - Require apparatus to render or pass-through closed captioning on each of their video outputs;
  - Decline to grant blanket waivers or exempt any device or class of devices from our rules based on achievability or the waiver provisions set forth in Section 203;
- Establish general complaint procedures and modify our existing television receiver closed captioning decoder requirements to conform to screen size and achievability provisions; and
- Establish a deadline for compliance of January 1, 2014 by which devices must comply with the requirements of Section 203.

Finally, we adopt a safe harbor for use of a particular interchange and delivery format.

Legal Basis

131. The authority for the action taken in this rulemaking is contained in the Twenty-First Century Communications and Video Accessibility Act of 2010, Public Law 111–260, 124 Stat. 2751, and Sections 4(i), 4(j), 303, 330(b), 713, and 716 of the Communications Act of 1934, as amended, 47 U.S.C. 154(i), 154(j), 303, 330(b), 613, and 617.

Summary of Significant Issues Raised by Public Comments in Response to the IRFA

132. No comments were filed in response to the IRFA. In response to the *NPRM,* commenters express their approval of proposals that gave appropriate consideration to smaller entities.

133. The American Cable Association (''ACA'') and the National Association of Broadcasters (''NAB'') also express concerns about the burdens of the mechanism proposed in the *NPRM* on smaller entities. As explained in the *Report and Order,* instead of adopting the proposed mechanism, we will permit VPOs and VPDs to agree upon a mechanism. This flexibility will alleviate the concerns of ACA and NAB.

134. Further, ACA argues that MVPDs, especially smaller operators, should not have to comply with multiple sets of rules aimed at achieving

the same purpose. In response, the *Report and Order* clarifies that the IP closed captioning rules will not apply to a broadcaster's or MVPD's provision of programming that is subject to the Commission's television closed captioning rules.

Description and Estimate of the Number of Small Entities to Which the Proposals Will Apply

135. The RFA directs the Commission to provide a description of and, where feasible, an estimate of the number of small entities that will be affected by the proposed rules if adopted. The RFA generally defines the term ''small entity'' as having the same meaning as the terms ''small business,'' ''small organization,'' and ''small governmental jurisdiction.'' In addition, the term ''small business'' has the same meaning as the term ''small business concern'' under the Small Business Act. A ''small business concern'' is one which: (1) Is independently owned and operated; (2) is not dominant in its field of operation; and (3) satisfies any additional criteria established by the Small Business Administration (''SBA'').

136. *Small Businesses, Small Organizations, and Small Governmental Jurisdictions.* Our action may, over time, affect small entities that are not easily categorized at present. We therefore describe here, at the outset, three comprehensive, statutory small entity size standards. First, nationwide, there are a total of approximately 27.5 million small businesses, according to the SBA. In addition, a ''small organization'' is generally ''any not-for-profit enterprise which is independently owned and operated and is not dominant in its field.'' Nationwide, as of 2007, there were approximately 1,621,315 small organizations. Finally, the term ''small governmental jurisdiction'' is defined generally as ''governments of cities, towns, townships, villages, school districts, or special districts, with a population of less than fifty thousand.'' Census Bureau data for 2011 indicate that there were 89,476 local governmental jurisdictions in the United States. We estimate that, of this total, a substantial majority may qualify as ''small governmental jurisdictions.'' Thus, we estimate that most governmental jurisdictions are small.

137. *Cable Television Distribution Services.* Since 2007, these services have been defined within the broad economic census category of Wired Telecommunications Carriers; that category is defined as follows: ''This industry comprises establishments primarily engaged in operating and/or providing access to transmission facilities and infrastructure that they own and/or lease for the transmission of voice, data, text, sound, and video using wired telecommunications networks. Transmission facilities may be based on a single technology or a combination of technologies.'' The SBA has developed a small business size standard for this category, which is: all such firms having 1,500 or fewer employees. Census data for 2007, which supersede data contained in the 2002 Census, show that there were 1,383 firms that operated that year. Of those 1,383, 1,368 had fewer than 100 employees, and 15 firms had more than 100 employees. Thus under this category and the associated small business size standard, the majority of such firms can be considered small.

138. *Cable Companies and Systems.* The Commission has also developed its own small business size standards, for the purpose of cable rate regulation. Under the Commission's rules, a ''small cable company'' is one serving 400,000 or fewer subscribers, nationwide. Industry data indicate that, of 1,076 cable operators nationwide, all but eleven are small under this size standard. In addition, under the Commission's rules, a ''small system'' is a cable system serving 15,000 or fewer subscribers. Industry data indicate that, of 6,635 systems nationwide, 5,802 systems have fewer than 10,000 subscribers, and an additional 302 systems have 10,000–19,999 subscribers. Thus, under this second size standard, most cable systems are small.

139. *Cable System Operators.* The Communications Act of 1934, as amended, also contains a size standard for small cable system operators, which is ''a cable operator that, directly or through an affiliate, serves in the aggregate fewer than 1 percent of all subscribers in the United States and is not affiliated with any entity or entities whose gross annual revenues in the aggregate exceed $250,000,000.'' The Commission has determined that an operator serving fewer than 677,000 subscribers shall be deemed a small operator, if its annual revenues, when combined with the total annual revenues of all its affiliates, do not exceed $250 million in the aggregate. Industry data indicate that, of 1,076 cable operators nationwide, all but ten are small under this size standard. We note that the Commission neither requests nor collects information on whether cable system operators are affiliated with entities whose gross annual revenues exceed $250 million, and therefore we are unable to estimate more accurately the number of cable system operators that would qualify as small under this size standard.

140. *Direct Broadcast Satellite (''DBS'') Service.* DBS service is a nationally distributed subscription service that delivers video and audio programming via satellite to a small parabolic ''dish'' antenna at the subscriber's location. DBS, by exception, is now included in the SBA's broad economic census category, ''Wired Telecommunications Carriers,'' which was developed for small wireline firms. Under this category, the SBA deems a wireline business to be small if it has 1,500 or fewer employees. To gauge small business prevalence for the DBS service, the Commission relies on data currently available from the U.S. Census for the year 2007. According to that source, there were 3,188 firms that in 2007 were Wired Telecommunications Carriers. Of these, 3,144 operated with less than 1,000 employees, and 44 operated with more than 1,000 employees. However, as to the latter 44 there is no data available that shows how many operated with more than 1,500 employees. Based on this data, the majority of these firms can be considered small. Currently, only two entities provide DBS service, which requires a great investment of capital for operation: DIRECTV and EchoStar Communications Corporation (''EchoStar'') (marketed as the DISH Network). Each currently offers subscription services. DIRECTV and EchoStar each report annual revenues that are in excess of the threshold for a small business. Because DBS service requires significant capital, we believe it is unlikely that a small entity as defined by the SBA would have the financial wherewithal to become a DBS service provider.

141. *Satellite Telecommunications Providers.* Two economic census categories address the satellite industry. The first category has a small business size standard of $15 million or less in average annual receipts, under SBA rules. The second has a size standard of $25 million or less in annual receipts.

142. The category of Satellite Telecommunications ''comprises establishments primarily engaged in providing telecommunications services to other establishments in the telecommunications and broadcasting industries by forwarding and receiving communications signals via a system of satellites or reselling satellite telecommunications.'' Census Bureau data for 2007 show that 512 Satellite Telecommunications firms operated for that entire year. Of this total, 464 firms had annual receipts of under $10 million, and 18 firms had receipts of

$10 million to $24,999,999. Consequently, the Commission estimates that the majority of Satellite Telecommunications firms are small entities that might be affected by our action.

143. The second category, *i.e.* ''All Other Telecommunications'' comprises ''establishments primarily engaged in providing specialized telecommunications services, such as satellite tracking, communications telemetry, and radar station operation. This industry also includes establishments primarily engaged in providing satellite terminal stations and associated facilities connected with one or more terrestrial systems and capable of transmitting telecommunications to, and receiving telecommunications from, satellite systems. Establishments providing Internet services or voice over Internet protocol (VoIP) services via client-supplied telecommunications connections are also included in this industry.'' For this category, Census Bureau data for 2007 show that there were a total of 2,383 firms that operated for the entire year. Of this total, 2,346 firms had annual receipts of under $25 million and 37 firms had annual receipts of $25 million to $49,999,999. Consequently, the Commission estimates that the majority of All Other Telecommunications firms are small entities that might be affected by our action.

144. *Television Broadcasting.* The SBA defines a television broadcasting station as a small business if such station has no more than $14.0 million in annual receipts. Business concerns included in this industry are those ''primarily engaged in broadcasting images together with sound.'' The Commission has estimated the number of licensed commercial television stations to be 1,390. According to Commission staff review of the BIA Kelsey Inc. Media Access Pro Television Database (BIA) as of January 31, 2011, 1,006 (or about 78 percent) of an estimated 1,298 commercial television stations in the United States have revenues of $14 million or less and, thus, qualify as small entities under the SBA definition. The Commission has estimated the number of licensed noncommercial educational (''NCE'') television stations to be 391. We note, however, that, in assessing whether a business concern qualifies as small under the above definition, business (control) affiliations must be included. Our estimate, therefore, likely overstates the number of small entities that might be affected by our action, because the revenue figure on which it is based does not include or aggregate revenues from affiliated companies. The Commission does not compile and otherwise does not have access to information on the revenue of NCE stations that would permit it to determine how many such stations would qualify as small entities.

145. In addition, an element of the definition of ''small business'' is that the entity not be dominant in its field of operation. We are unable at this time to define or quantify the criteria that would establish whether a specific television station is dominant in its field of operation. Accordingly, the estimate of small businesses to which rules may apply do not exclude any television station from the definition of a small business on this basis and are therefore over-inclusive to that extent. Also, as noted, an additional element of the definition of ''small business'' is that the entity must be independently owned and operated. We note that it is difficult at times to assess these criteria in the context of media entities and our estimates of small businesses to which they apply may be over-inclusive to this extent.

146. *Open Video Services.* Open Video Service (OVS) systems provide subscription services. The open video system (''OVS'') framework was established in 1996, and is one of four statutorily recognized options for the provision of video programming services by local exchange carriers. The OVS framework provides opportunities for the distribution of video programming other than through cable systems. Because OVS operators provide subscription services, OVS falls within the SBA small business size standard covering cable services, which is ''Wired Telecommunications Carriers.'' The SBA has developed a small business size standard for this category, which is: All such firms having 1,500 or fewer employees. To gauge small business prevalence for the OVS service, the Commission relies on data currently available from the U.S. Census for the year 2007. According to that source, there were 3,188 firms that in 2007 were Wired Telecommunications Carriers. Of these, 3,144 operated with less than 1,000 employees, and 44 operated with more than 1,000 employees. However, as to the latter 44 there is no data available that shows how many operated with more than 1,500 employees. Based on this data, the majority of these firms can be considered small. In addition, we note that the Commission has certified some OVS operators, with some now providing service. Broadband service providers (''BSPs'') are currently the only significant holders of OVS certifications or local OVS franchises. The Commission does not have financial or employment information regarding the entities authorized to provide OVS, some of which may not yet be operational. Thus, at least some of the OVS operators may qualify as small entities. The Commission further notes that it has certified approximately 45 OVS operators to serve 75 areas, and some of these are currently providing service. Affiliates of Residential Communications Network, Inc. (''RCN'') received approval to operate OVS systems in New York City, Boston, Washington, DC, and other areas. RCN has sufficient revenues to assure that they do not qualify as a small business entity. Little financial information is available for the other entities that are authorized to provide OVS and are not yet operational. Given that some entities authorized to provide OVS service have not yet begun to generate revenues, the Commission concludes that up to 44 OVS operators (those remaining) might qualify as small businesses that may be affected by the rules and policies adopted herein.

147. *Cable and Other Subscription Programming.* The Census Bureau defines this category as follows: ''This industry comprises establishments primarily engaged in operating studios and facilities for the broadcasting of programs on a subscription or fee basis * * *. These establishments produce programming in their own facilities or acquire programming from external sources. The programming material is usually delivered to a third party, such as cable systems or direct-to-home satellite systems, for transmission to viewers.'' To gauge small business prevalence in the Cable and Other Subscription Programming industries, the Commission relies on data currently available from the U.S. Census for the year 2007. According to that source, which supersedes data from the 2002 Census, there were 396 firms that in 2007 were engaged in production of Cable and Other Subscription Programming. Of these, 386 operated with less than 1,000 employees, and 10 operated with more than 1,000 employees. However, as to the latter 10 there is no data available that shows how many operated with more than 1,500 employees. Thus, under this category and associated small business size standard, the majority of firms can be considered small.

148. *Motion Picture and Video Production.* The Census Bureau defines this category as follows: ''This industry comprises establishments primarily engaged in producing, or producing and distributing motion pictures, videos, television programs, or television

commercials.'' We note that firms in this category may be engaged in various industries, including cable programming. Specific figures are not available regarding how many of these firms produce and/or distribute programming for cable television. To gauge small business prevalence in the Motion Picture and Video Production industries, the Commission relies on data currently available from the U.S. Census for the year 2007. The size standard established by the SBA for this business category is that annual receipts of $29.5 million or less determine that a business is small. According to the 2007 Census, there were 9,095 firms that in 2007 were engaged in Motion Picture and Video Production. Of these, 8,995 had annual receipts of $24,999,999 or less, and 100 had annual receipts ranging from not less that $25,000,000 to $100,000,000 or more. Thus, under this category and associated small business size standard, the majority of firms can be considered small.

149. *Motion Picture and Video Distribution.* The Census Bureau defines this category as follows: ''This industry comprises establishments primarily engaged in acquiring distribution rights and distributing film and video productions to motion picture theaters, television networks and stations, and exhibitors.'' We note that firms in this category may be engaged in various industries, including cable programming. Specific figures are not available regarding how many of these firms produce and/or distribute programming for cable television. To gauge small business prevalence in the Motion Picture and Video Distribution industries, the Commission relies on data currently available from the U.S. Census for the year 2007. Based on the SBA size standard of annual receipts of 29.5 million dollars, and according to that 2007 Census source, which supersedes data from the 2002 Census, there were 450 firms that in 2007 were engaged in Motion Picture and Video Distribution. Of that number, 434 received annual receipts of $24,999,999 or less, and 16 received annual receipts ranging from $25,000,000 to $100,000,000 or more. Thus, under this category and associated small business size standard, the majority of firms can be considered small.

150. *Small Incumbent Local Exchange Carriers (LECs).* We have included small incumbent local exchange carriers in this present RFA analysis. As noted above, a ''small business'' under the RFA is one that, inter alia, meets the pertinent small business size standard (*e.g.,* a telephone communications business having 1,500 or fewer employees), and ''is not dominant in its field of operation.'' The SBA's Office of Advocacy contends that, for RFA purposes, small incumbent local exchange carriers are not dominant in their field of operation because any such dominance is not ''national'' in scope. We have therefore included small incumbent local exchange carriers in this RFA analysis, although we emphasize that this RFA action has no effect on Commission analyses and determinations in other, non-RFA contexts.

151. *Incumbent Local Exchange Carriers (Incumbent LECs*). Neither the Commission nor the SBA has developed a small business size standard specifically for incumbent local exchange services. The appropriate size standard under SBA rules is for the category Wired Telecommunications Carriers. Under that size standard, such a business is small if it has 1,500 or fewer employees. Census Bureau data for 2007, which now supersede data from the 2002 Census, show that there were 3,188 firms in this category that operated for the entire year. Of this total, 3,144 had employment of 999 or fewer, and 44 firms had had employment of 1,000 or more. According to Commission data, 1,307 carriers reported that they were incumbent local exchange service providers. Of these 1,307 carriers, an estimated 1,006 have 1,500 or fewer employees and 301 have more than 1,500 employees. Consequently, the Commission estimates that most providers of local exchange service are small entities that may be affected by the rules and policies adopted. Thus under this category and the associated small business size standard, the majority of these incumbent local exchange service providers can be considered small providers.

152. Competitive Local Exchange Carriers (Competitive LECs), Competitive Access Providers (CAPs), Shared-Tenant Service Providers, and Other Local Service Providers. Neither the Commission nor the SBA has developed a small business size standard specifically for these service providers. The appropriate size standard under SBA rules is for the category Wired Telecommunications Carriers. Under that size standard, such a business is small if it has 1,500 or fewer employees. Census Bureau data for 2007, which now supersede data from the 2002 Census, show that there were 3,188 firms in this category that operated for the entire year. Of this total, 3,144 had employment of 999 or fewer, and 44 firms had had employment of 1,000 employees or more. Thus under this category and the associated small business size standard, the majority of these Competitive LECs, CAPs, Shared-Tenant Service Providers, and Other Local Service Providers can be considered small entities. According to Commission data, 1,442 carriers reported that they were engaged in the provision of either competitive local exchange services or competitive access provider services. Of these 1,442 carriers, an estimated 1,256 have 1,500 or fewer employees and 186 have more than 1,500 employees. In addition, 17 carriers have reported that they are Shared-Tenant Service Providers, and all 17 are estimated to have 1,500 or fewer employees. In addition, 72 carriers have reported that they are Other Local Service Providers. Of the 72, seventy have 1,500 or fewer employees and two have more than 1,500 employees. Consequently, the Commission estimates that most providers of competitive local exchange service, competitive access providers, Shared-Tenant Service Providers, and Other Local Service Providers are small entities that may be affected by rules adopted pursuant to the NPRM.

153. Radio and Television Broadcasting and Wireless Communications Equipment Manufacturing. The Census Bureau defines this category as follows: ''This industry comprises establishments primarily engaged in manufacturing radio and television broadcast and wireless communications equipment. Examples of products made by these establishments are: transmitting and receiving antennas, cable television equipment, GPS equipment, pagers, cellular phones, mobile communications equipment, and radio and television studio and broadcasting equipment.'' The SBA has developed a small business size standard for Radio and Television Broadcasting and Wireless Communications Equipment Manufacturing, which is: all such firms having 750 or fewer employees. According to Census Bureau data for 2007, there were a total of 939 establishments in this category that operated for part or all of the entire year. According to Census Bureau data for 2007, there were a total of 919 firms in this category that operated for the entire year. Of this total, 771 had less than 100 employees and 148 had more than 100 employees. Thus, under that size standard, the majority of firms can be considered small.

154. *Audio and Video Equipment Manufacturing.* The SBA has classified the manufacturing of audio and video equipment under the NAICS Codes classification scheme as an industry in

which a manufacturer is small if it has less than 750 employees. Data contained in the 2007 U.S. Census indicate that 491 establishments operated in that industry for all or part of that year. In that year, 376 establishments had between 1 and 19 employees; 80 had between 20 and 99 employees; and 35 had more than 100 employees. Thus, under the applicable size standard, a majority of manufacturers of audio and video equipment may be considered small.

155. *Internet Publishing and Broadcasting and Web Search Portals.* The Census Bureau defines this category to include ''* * * establishments primarily engaged in (1) publishing and/or broadcasting content on the Internet exclusively or (2) operating Web sites that use a search engine to generate and maintain extensive databases of Internet addresses and content in an easily searchable format (and known as Web search portals). The publishing and broadcasting establishments in this industry do not provide traditional (non-Internet) versions of the content that they publish or broadcast. They provide textual, audio, and/or video content of general or specific interest on the Internet exclusively. Establishments known as Web search portals often provide additional Internet services, such as email, connections to other Web sites, auctions, news, and other limited content, and serve as a home base for Internet users.''

156. In this category, the SBA has deemed an Internet publisher or Internet broadcaster or the provider of a Web search portal on the Internet to be small if it has fewer than 500 employees. For this category of manufacturers, Census data for 2007, which supersede similar data from the 2002 Census, show that there were 2,705 such firms that operated that year. Of those 2,705 firms, 2,682 (approximately 99%) had fewer than 500 employees and, thus, would be deemed small under the applicable SBA size standard. Accordingly, the majority of establishments in this category can be considered small under that standard.

157. *Closed Captioning Services.* These entities would be indirectly affected by our action. The SBA has developed two small business size standards that may be used for closed captioning services. The two size standards track the economic census categories, ''Teleproduction and Other Postproduction Services'' and ''Court Reporting and Stenotype Services.''

158. The first category of *Teleproduction and Other Postproduction Services* ''comprises establishments primarily engaged in providing specialized motion picture or video postproduction services, such as editing, film/tape transfers, subtitling, credits, closed captioning, and animation and special effects.'' The relevant size standard for small businesses in these services is an annual revenue of less than $29.5 million. For this category, Census Bureau Data for 2007 indicate that there were 1,605 firms that operated in this category for the entire year. Of that number, 1,597 had receipts totaling less than $29,500,000. Consequently we estimate that the majority of Teleproduction and Other Postproduction Services firms are small entities that might be affected by our action.

159. The second category of *Court Reporting and Stenotype Services* ''comprises establishments primarily engaged in providing verbatim reporting and stenotype recording of live legal proceedings and transcribing subsequent recorded materials.'' The size standard for small businesses in these services is an annual revenue of less than $7 million. For this category, Census Bureau data for 2007 show that there were 2,706 firms that operated for the entire year. Of this total, 2,590 had annual receipts of under $5 million, and 19 firms had receipts of $5 million to $9,999,999. Consequently, we estimate that the majority of Court Reporting and Stenotype Services firms are small entities that might be affected by our action.

Description of Projected Reporting, Recordkeeping, and Other Compliance Requirements for Small Entities

160. The rules adopted in the *Report and Order* generally require VPOs to send required caption files for IP-delivered video programming to VPDs along with program files. The rules also require VPDs to enable the rendering or pass through of all required captions to the end user. Further, the rules impose closed captioning requirements on certain apparatus that receive or play back video programming, and on certain recording devices.

161. The rules will require VPOs and VPDs to agree upon a ''mechanism'' that will make available to the VPD information on video programming subject to the IP closed captioning requirements on an ongoing basis. The ''mechanism'' may involve a system of certifications that are kept up-to-date, or it may involve the use of a third-party database, private contractual arrangements, or another ''mechanism'' agreed upon by the parties.

162. The *Report and Order* creates a process by which VPDs and VPOs may petition the Commission for a full or partial exemption of the requirements for closed captioning of IP-delivered video programming, which the Commission may grant upon a finding that the requirements would be economically burdensome. Further, the *Report and Order* creates a process by which manufacturers of apparatus may petition the Commission for a full or partial exemption of the requirements to implement closed captioning in their apparatus, which the Commission may grant upon a finding that implementation would not be achievable, technically feasible, that the apparatus is a display only monitor, or that purpose of the apparatus is such that the rules are inapplicable. The *Report and Order* also adopts procedures for complaints alleging a violation of the IP closed captioning rules, and it requires VPDs to make contact information available to end users for the receipt and handling of written IP closed captioning complaints.

Steps Taken To Minimize Significant Economic Impact on Small Entities and Significant Alternatives Considered

163. The RFA requires an agency to describe any significant alternatives that it has considered in reaching its proposed approach, which may include the following four alternatives (among others): (1) The establishment of differing compliance or reporting requirements or timetables that take into account the resources available to small entities; (2) the clarification, consolidation, or simplification of compliance or reporting requirements under the rule for small entities; (3) the use of performance, rather than design, standards; and (4) an exemption from coverage of the rule, or any part thereof, for small entities.

164. These rules may have a significant economic impact in some cases, and that impact may affect a substantial number of small entities. Although alternatives to minimize economic impact have been considered, we note that our action is governed by the congressional mandate contained in Sections 202(b), (c), and 203 of the CVAA. The *Report and Order* adopts procedures enabling the Commission to grant exemptions to the rules governing closed captioning of IP-delivered video programming pursuant to Section 202 of the CVAA, where a petitioner has shown that compliance would present an economic burden (*i.e.,* a significant difficulty or expense), and pursuant to Section 203 of the CVAA, where a petitioner has shown that compliance is not achievable (*i.e.,* cannot be accomplished with reasonable effort or expense) or not technically feasible. This exemption process will allow the

Commission to address the impact of the rules on individual entities, including smaller entities, and to modify the application of the rules to accommodate individual circumstances. Further, the *Report and Order* provides that a *de minimis* failure to comply with the requirements adopted pursuant to Section 202 of the CVAA shall not be treated as a violation, and it provides that parties may use alternate means of compliance to the rules adopted pursuant to either Section 202 or Section 203 of the CVAA. Individual entities, including smaller entities, may benefit from these provisions.

165. To fulfill the statutory mandate that the Commission ''establish a mechanism to make available to video programming providers and distributors information on video programming subject to the Act on an ongoing basis,'' the *NPRM* proposed a system of certifications and updated certifications. Due to concerns that such a system may be burdensome for entities that must comply, including smaller entities, in the *Report and Order* the Commission instead adopted a flexible process by which VPOs and VPDs must agree upon a ''mechanism'' to make available to the VPD information on video programming subject to the IP closed captioning requirements on an ongoing basis.

Federal Rules That May Duplicate, Overlap, or Conflict With the Proposed Rules

166. None.

Report to Congress

167. The Commission will send a copy of the *Report and Order,* including this FRFA, in a report to be sent to Congress pursuant to the Congressional Review Act. In addition, the Commission will send a copy of the *Report and Order,* including this FRFA, to the Chief Counsel for Advocacy of the SBA. The *Report and Order* and FRFA (or summaries thereof) will also be published in the **Federal Register**.

B. Congressional Review Act

168. The Commission will send a copy of this *Report and Order* in MB Docket No. 11–154 in a report to be sent to Congress and the Government Accountability Office pursuant to the Congressional Review Act, *see* 5 U.S.C. 801(a)(1)(A).

VII. Ordering Clauses

169. Accordingly, *it is ordered* that, pursuant to the Twenty-First Century Communications and Video Accessibility Act of 2010, Public Law 111–260, 124 Stat. 2751, and the authority found in Sections 4(i), 4(j), 303, 330(b), 713, and 716 of the Communications Act of 1934, as amended, 47 U.S.C. 154(i), 154(j), 303, 330(b), 613, and 617, this *Report and Order is adopted,* effective thirty (30) days after the date of publication in the **Federal Register**, except for §§ 79.4(c)(1)(ii), 79.4(c)(2)(ii)–(iii), 79.4(d)(1)–(4) and (d)(6)–(9), 79.4(e)(1)–(6), and 79.103(b)(3)–(4), which shall become effective upon announcement in the **Federal Register** of OMB approval and an effective date of the rule(s).

170. *It is ordered* that, pursuant to the Twenty-First Century Communications and Video Accessibility Act of 2010, Public Law 111–260, 124 Stat. 2751, and the authority found in Sections 4(i), 4(j), 303, 330(b), 713, and 716 of the Communications Act of 1934, as amended, 47 U.S.C. 154(i), 154(j), 303, 330(b), 613, and 617, the Commission's rules *are hereby amended* as set forth in the Final Rules.

171. *It is further ordered* that we delegate authority to the Media Bureau and the Consumer and Governmental Affairs Bureau to consider all requests for declaratory rulings pursuant to § 1.2 of the Commission's rules, 47 CFR 1.2, all waiver requests, and all informal requests for Commission action pursuant to § 1.41 of the Commission's rules, 47 CFR 1.41, filed under these rules and pursuant to Sections 202(b) and 203 of the CVAA.

172. *It is further ordered* that the Commission's Consumer and Governmental Affairs Bureau, Reference Information Center, *shall send* a copy of this *Report and Order* in MB Docket No. 11–154, including the Final Regulatory Flexibility Analysis, to the Chief Counsel for Advocacy of the Small Business Administration.

173. *It is further ordered* that the Commission *shall send* a copy of this *Report and Order* in MB Docket No. 11–154 in a report to be sent to Congress and the Government Accountability Office pursuant to the Congressional Review Act, *see* 5 U.S.C. 801(a)(1)(A).

List of Subjects

47 CFR Part 15

Communications equipment, Incorporation by reference, Labeling, and Reporting and recordkeeping requirements.

47 CFR Part 79

Cable television operators, Incorporation by reference, Multichannel video programming distributors (MVPDs), Satellite television service providers, Television broadcasters.

Federal Communications Commission.

Marlene H. Dortch,

Secretary.

Final Rules

For the reasons stated in the preamble, the Federal Communications Commission amends 47 CFR parts 15 and 79 as follows:

PART 15—RADIO FREQUENCY DEVICES

■ 1. The authority citation for part 15 continues to read as follows:

Authority: 47 U.S.C. 154, 302a, 303, 304, 307, 336, 544a, and 549.

§ 15.38 [Amended]

■ 2. In § 15.38, remove and reserve paragraph (b)(10).

■ 3. Redesignate § 15.119 as § 79.101.

■ 4. Add and reserve § 15.119.

■ 5. Redesignate § 15.122 as § 79.102.

■ 6. Add and reserve § 15.122.

PART 79—CLOSED CAPTIONING AND VIDEO DESCRIPTION OF VIDEO PROGRAMMING

■ 7. The authority citation for part 79 is revised to read as follows:

Authority: 47 U.S.C. 151, 152(a), 154(i), 303, 307, 309, 310, 330, 544a, 613, 617.

■ 8. Amend § 79.1 by revising paragraphs (a)(4) and (c) to read as follows:

§ 79.1 Closed captioning of video programming.

(a) * * *

(4) *Closed captioning.* The visual display of the audio portion of video programming pursuant to the technical specifications set forth in this part.

* * * * *

(c) *Obligation to pass through captions of already captioned programs.* All video programming distributors shall deliver all programming received from the video programming owner or other origination source containing closed captioning to receiving television households with the original closed captioning data intact in a format that can be recovered and displayed by decoders meeting the standards of this part unless such programming is recaptioned or the captions are reformatted by the programming distributor.

* * * * *

■ 9. Add § 79.4 to read as follows:

§ 79.4 Closed captioning of video programming delivered using Internet protocol.

(a) *Definitions.* For purposes of this section the following definitions shall apply:

(1) *Video programming.* Programming provided by, or generally considered comparable to programming provided by, a television broadcast station, but not including consumer-generated media.

(2) *Full-length video programming.* Video programming that appears on television and is distributed to end users, substantially in its entirety, via Internet protocol, excluding video clips or outtakes.

(3) *Video programming distributor or video programming provider.* Any person or entity that makes available directly to the end user video programming through a distribution method that uses Internet protocol.

(4) *Video programming owner.* Any person or entity that either:

(i) Licenses the video programming to a video programming distributor or provider that makes the video programming available directly to the end user through a distribution method that uses Internet protocol; or

(ii) Acts as the video programming distributor or provider, and also possesses the right to license the video programming to a video programming distributor or provider that makes the video programming available directly to the end user through a distribution method that uses Internet protocol.

(5) *Internet protocol.* Includes Transmission Control Protocol and a successor protocol or technology to Internet protocol.

(6) *Closed captioning.* The visual display of the audio portion of video programming pursuant to the technical specifications set forth in this part.

(7) *Live programming.* Video programming that is shown on television substantially simultaneously with its performance.

(8) *Near-live programming.* Video programming that is performed and recorded less than 24 hours prior to the time it was first aired on television.

(9) *Prerecorded programming.* Video programming that is not ''live'' or ''near-live.''

(10) *Edited for Internet distribution.* Video programming for which the television version is substantially edited prior to its Internet distribution.

(11) *Consumer-generated media.* Content created and made available by consumers to online Web sites and services on the Internet, including video, audio, and multimedia content.

(12) *Video clips.* Excerpts of full-length video programming.

(13) *Outtakes.* Content that is not used in an edited version of video programming shown on television.

(14) *Nonexempt programming.* Video programming that is not exempted under paragraph (d) of this section and, accordingly, is subject to closed captioning requirements set forth in this section.

(b) *Requirements for closed captioning of Internet protocol-delivered video programming.* All nonexempt full-length video programming delivered using Internet protocol must be provided with closed captions if the programming is published or exhibited on television in the United States with captions on or after the following dates:

(1) September 30, 2012, for all prerecorded programming that is not edited for Internet distribution, unless it is subject to paragraph (b)(4) of this section.

(2) March 30, 2013, for all live and near-live programming, unless it is subject to paragraph (b)(4) of this section.

(3) September 30, 2013, for all prerecorded programming that is edited for Internet distribution, unless it is subject to paragraph (b)(4) of this section.

(4) All programming that is already in the video programming distributor's or provider's library before it is shown on television with captions must be captioned within 45 days after the date it is shown on television with captions on or after March 30, 2014 and before March 30, 2015. Such programming must be captioned within 30 days after the date it is shown on television with captions on or after March 30, 2015 and before March 30, 2016. Such programming must be captioned within 15 days after the date it is shown on television with captions on or after March 30, 2016.

(c) *Obligations of video programming owners, distributors and providers.*

(1) *Obligations of video programming owners.* Each video programming owner must:

(i) Send program files to video programming distributors and providers with captions as required by this section, with at least the same quality as the television captions provided for the same programming. If a video programming owner provides captions to a video programming distributor or provider using the Society of Motion Picture and Television Engineers Timed Text format (SMPTE ST 2052–1:2010, incorporated by reference, *see* § 79.100), then the VPO has fulfilled its obligation to deliver captions to the video programming distributor or provider in an acceptable format. A video programming owner and a video programming distributor or provider may agree upon an alternative technical format for the delivery of captions to the video programming distributor or provider.

(ii) With each video programming distributor and provider that such owner licenses to distribute video programming directly to the end user through a distribution method that uses Internet protocol, agree upon a mechanism to inform such distributors and providers on an ongoing basis whether video programming is subject to the requirements of this section.

(2) *Obligations of video programming distributors and providers.* Each video programming distributor and provider must:

(i) Enable the rendering or pass through of all required captions to the end user, maintaining the quality of the captions provided by the video programming owner and transmitting captions in a format reasonably designed to reach the end user in that quality. A video programming distributor or provider that provides applications, plug-ins, or devices in order to deliver video programming must comply with the requirements of § 79.103(c) and (d).

(ii) With each video programming owner from which such distributor or provider licenses video programming for distribution directly to the end user through a distribution method that uses Internet protocol, agree upon a mechanism to inform such distributor or provider on an ongoing basis whether video programming is subject to the requirements of this section, and make a good faith effort to identify video programming subject to the requirements of this section using the agreed upon mechanism. A video programming distributor or provider may rely in good faith on a certification by a video programming owner that the video programming need not be captioned if:

(A) The certification includes a clear and concise explanation of why captioning is not required; and

(B) The video programming distributor or provider is able to produce the certification to the Commission in the event of a complaint.

(iii) Make contact information available to end users for the receipt and handling of written closed captioning complaints alleging violations of this section. The contact information required for written complaints shall include the name of a person with primary responsibility for Internet protocol captioning issues and who can ensure compliance with these rules. In

addition, this contact information shall include the person's title or office, telephone number, fax number, postal mailing address, and email address. Video programming distributors and providers shall keep this information current and update it within 10 business days of any change.

(3) A video programming provider's or owner's *de minimis* failure to comply with this section shall not be treated as a violation of the requirements.

(d) *Procedures for exemptions based on economic burden.*

(1) A video programming provider or owner may petition the Commission for a full or partial exemption from the closed captioning requirements of this section, which the Commission may grant upon a finding that the requirements would be economically burdensome.

(2) The petitioner must support a petition for exemption with sufficient evidence to demonstrate that compliance with the requirements for closed captioning of video programming delivered via Internet protocol would be economically burdensome. The term ''economically burdensome'' means imposing significant difficulty or expense. The Commission will consider the following factors when determining whether the requirements for closed captioning of Internet protocol-delivered video programming would be economically burdensome:

(i) The nature and cost of the closed captions for the programming;

(ii) The impact on the operation of the video programming provider or owner;

(iii) The financial resources of the video programming provider or owner; and

(iv) The type of operations of the video programming provider or owner.

(3) In addition to these factors, the petitioner must describe any other factors it deems relevant to the Commission's final determination and any available alternatives that might constitute a reasonable substitute for the closed captioning requirements of this section including, but not limited to, text or graphic display of the content of the audio portion of the programming. The Commission will evaluate economic burden with regard to the individual outlet.

(4) The petitioner must electronically file its petition for exemption, and all subsequent pleadings related to the petition, in accordance with § 0.401(a)(1)(iii) of this chapter.

(5) The Commission will place the petition on public notice.

(6) Any interested person may electronically file comments or oppositions to the petition within 30 days after release of the public notice of the petition. Within 20 days after the close of the period for filing comments or oppositions, the petitioner may reply to any comments or oppositions filed.

(7) Persons who file comments or oppositions to the petition must serve the petitioner with copies of those comments or oppositions and must include a certification that the petitioner was served with a copy. Any petitioner filing a reply to comments or oppositions must serve the commenting or opposing party with a copy of the reply and shall include a certification that the party was served with a copy. Comments or oppositions and replies shall be served upon a party, its attorney, or its other duly constituted agent by delivering or mailing a copy to the party's last known address in accordance with § 1.47 of this chapter or by sending a copy to the email address last provided by the party, its attorney, or other duly constituted agent.

(8) Upon a finding of good cause, the Commission may lengthen or shorten any comment period and waive or establish other procedural requirements.

(9) Persons filing petitions and responsive pleadings must include a detailed, full showing, supported by affidavit, of any facts or considerations relied on.

(10) The Commission may deny or approve, in whole or in part, a petition for an economic burden exemption from the closed captioning requirements of this section.

(11) During the pendency of an economic burden determination, the Commission will consider the video programming subject to the request for exemption as exempt from the requirements of this section.

(e) *Complaint procedures.*

(1) Complaints concerning an alleged violation of the closed captioning requirements of this section shall be filed in writing with the Commission or with the video programming distributor or provider responsible for enabling the rendering or pass through of the closed captions for the video programming within sixty (60) days after the date the complainant experienced a problem with captioning. A complaint filed with the Commission must be directed to the Consumer and Governmental Affairs Bureau and submitted through the Commission's online informal complaint filing system, U.S. Mail, overnight delivery, or facsimile.

(2) A complaint should include the following information:

(i) The name, postal address, and other contact information of the complainant, such as telephone number or email address;

(ii) The name and postal address, Web site, or email address of the video programming distributor, provider, and/or owner against which the complaint is alleged, and information sufficient to identify the video programming involved;

(iii) Information sufficient to identify the software or device used to view the program;

(iv) A statement of facts sufficient to show that the video programming distributor, provider, and/or owner has violated or is violating the Commission's rules, and the date and time of the alleged violation;

(v) The specific relief or satisfaction sought by the complainant; and

(vi) The complainant's preferred format or method of response to the complaint (such as letter, facsimile transmission, telephone (voice/TRS/TTY), email, or some other method that would best accommodate the complainant).

(3) If a complaint is filed first with the Commission, the Commission will forward complaints satisfying the above requirements to the named video programming distributor, provider, and/or owner, as well as to any other video programming distributor, provider, and/or owner that Commission staff determines may be involved. The video programming distributor, provider, and/or owner must respond in writing to the Commission and the complainant within 30 days after receipt of the complaint from the Commission.

(4) If a complaint is filed first with the video programming distributor or provider, the video programming distributor or provider must respond in writing to the complainant within thirty (30) days after receipt of a closed captioning complaint. If a video programming distributor or provider fails to respond to the complainant within thirty (30) days, or the response does not satisfy the consumer, the complainant may file the complaint with the Commission within thirty (30) days after the time allotted for the video programming distributor or provider to respond. If a consumer re-files the complaint with the Commission (after filing with the distributor or provider) and the complaint satisfies the above requirements, the Commission will forward the complaint to the named video programming distributor or provider, as well as to any other video programming distributor, provider, and/or owner that Commission staff determines may be involved. The video programming distributor, provider, and/or owner must then respond in writing to the Commission and the complainant

within 30 days after receipt of the complaint from the Commission.

(5) In response to a complaint, video programming distributors, providers, and/or owners shall file with the Commission sufficient records and documentation to prove that the responding entity was (and remains) in compliance with the Commission's rules. Conclusory or insufficiently supported assertions of compliance will not carry a video programming distributor's, provider's, or owner's burden of proof. If the responding entity admits that it was not or is not in compliance with the Commission's rules, it shall file with the Commission sufficient records and documentation to explain the reasons for its noncompliance, show what remedial steps it has taken or will take, and show why such steps have been or will be sufficient to remediate the problem.

(6) The Commission will review all relevant information provided by the complainant and the subject video programming distributors, providers, and/or owners, as well as any additional information the Commission deems relevant from its files or public sources. The Commission may request additional information from any relevant entities when, in the estimation of Commission staff, such information is needed to investigate the complaint or adjudicate potential violation(s) of Commission rules. When the Commission requests additional information, parties to which such requests are addressed must provide the requested information in the manner and within the time period the Commission specifies.

(7) If the Commission finds that a video programming distributor, provider, or owner has violated the closed captioning requirements of this section, it may employ the full range of sanctions and remedies available under the Communications Act of 1934, as amended, against any or all of the violators.

(f) *Private rights of action prohibited.* Nothing in this section shall be construed to authorize any private right of action to enforce any requirement of this section. The Commission shall have exclusive jurisdiction with respect to any complaint under this section.

■ 10. Add § 79.100 to read as follows:

§ 79.100 Incorporation by reference.

(a) The materials listed in this section are incorporated by reference in this part. These incorporations by reference were approved by the Director of the Federal Register in accordance with 5 U.S.C. 552(a) and 1 CFR part 51. These materials are incorporated as they exist on the date of the approval, and notice of any change in these materials will be published in the **Federal Register**. The materials are available for purchase at the corresponding addresses as noted, and all are available for inspection at the Federal Communications Commission, 445 12th St. SW., Reference Information Center, Room CY–A257, Washington, DC 20554, (202) 418–0270, and at the National Archives and Records Administration (NARA). For information on the availability of this material at NARA, call (202) 741–6030, or go to: *http://www.archives.gov/federal_register/code_of_federal_regulations/ibr_locations.html.*

(b) Global Engineering Documents, 15 Inverness Way East, Englewood, CO 80112, (800) 854–7179, or at *http://global.ihs.com:*

(1) EIA–708–B: ''Digital Television (DTV) Closed Captioning,'' 1999, IBR approved for § 79.102.

(2) [Reserved]

(c) Society of Motion Picture & Television Engineers (SMPTE), 3 Barker Ave., 5th Floor, White Plains, NY 10601, or at the SMPTE Web site: *http://www.smpte.org/standards/:*

(1) SMPTE ST 2052–1:2010: ''Timed Text Format (SMPTE–TT)'' 2010, IBR approved for §§ 79.4 and 79.103.

(2) [Reserved]

■ 11. Amend newly redesignated § 79.101 by revising paragraphs (a) and (m) to read as follows:

§ 79.101 Closed caption decoder requirements for analog television receivers.

(a)(1) Effective July 1, 1993, all television broadcast receivers with picture screens 33 cm (13 in) or larger in diameter shipped in interstate commerce, manufactured, assembled, or imported from any foreign country into the United States shall comply with the provisions of this section.

Note to paragraph (a)(1): This paragraph places no restriction on the shipping or sale of television receivers that were manufactured before July 1, 1993.

(2) Effective January 1, 2014, all television broadcast receivers shipped in interstate commerce, manufactured, assembled, or imported from any foreign country into the United States shall comply with the provisions of this section, if technically feasible, except that television broadcast receivers that use a picture screen less than 13 inches in size must comply with the provisions of this section only if doing so is achievable pursuant to § 79.103(b)(3).

* * * * *

(m) *Labeling and consumer information requirements.* (1) The box or other package in which the individual television receiver is to be marketed shall carry a statement in a prominent location, visible to the buyer before purchase, which reads as follows:

This television receiver provides display of television closed captioning in accordance with FCC rules.

(2) Receivers that do not support color attributes or text mode, as well as receivers that display only upper-case characters pursuant to paragraph (g) of this section, must include with the statement, and in the owner's manual, language indicating that those features are not supported.

* * * * *

■ 12. Amend newly redesignated § 79.102 by adding paragraph (a)(3) and revising paragraph (b) to read as follows:

§ 79.102 Closed caption decoder requirements for digital television receivers and converter boxes.

(a) * * *

(3) Effective January 1, 2014, all digital television receivers and all separately sold DTV tuners shipped in interstate commerce or manufactured in the United States shall comply with the provisions of this section, if technically feasible, except that digital television receivers that use a picture screens less than 13 inches in size must comply with the provisions of this section only if doing so is achievable pursuant to § 79.103(b)(3).

(b) Digital television receivers and tuners must be capable of decoding closed captioning information that is delivered pursuant to EIA–708–B: ''Digital Television (DTV) Closed Captioning'' (incorporated by reference, *see* § 79.100).

* * * * *

■ 13. Add § 79.103 to read as follows:

§ 79.103 Closed caption decoder requirements for all apparatus.

(a) Effective January 1, 2014, all digital apparatus designed to receive or play back video programming transmitted simultaneously with sound, if such apparatus is manufactured in the United States or imported for use in the United States and uses a picture screen of any size must be equipped with built-in closed caption decoder circuitry or capability designed to display closed-captioned video programming pursuant to the provisions of this section, if technically feasible, except that apparatus that use a picture screen less than 13 inches in size must comply with the provisions of this section only if doing so is achievable as defined in this section.

Note to paragraph (a): Apparatus includes the physical device and the video players that manufacturers install

into the devices they manufacture before sale, whether in the form of hardware, software, or a combination of both, as well as any video players that manufacturers direct consumers to install after sale.

(b) *Exempt apparatus.* (1) *Display-only monitors.* Apparatus or class of apparatus that are display-only video monitors with no playback capability are not required to comply with the provisions of this section.

(2) *Professional or commercial equipment.* Apparatus or class of apparatus that are professional or commercial equipment not typically used by the public are not required to comply with the provisions of this section.

(3)(i) *Achievable.* Manufacturers of apparatus that use a picture screen of less than 13 inches in size may petition the Commission for a full or partial exemption from the closed captioning requirements of this section pursuant to § 1.41 of this chapter, which the Commission may grant upon a finding that the requirements of this section are not achievable, or may assert that such apparatus is fully or partially exempt as a response to a complaint, which the Commission may dismiss upon a finding that the requirements of this section are not achievable.

(ii) The petitioner or respondent must support a petition for exemption or a response to a complaint with sufficient evidence to demonstrate that compliance with the requirements of this section is not ''achievable'' where ''achievable'' means with reasonable effort or expense. The Commission will consider the following factors when determining whether the requirements of this section are not ''achievable:''

(A) The nature and cost of the steps needed to meet the requirements of this section with respect to the specific equipment or service in question;

(B) The technical and economic impact on the operation of the manufacturer or provider and on the operation of the specific equipment or service in question, including on the development and deployment of new communications technologies;

(C) The type of operations of the manufacturer or provider; and

(D) The extent to which the service provider or manufacturer in question offers accessible services or equipment containing varying degrees of functionality and features, and offered at differing price points.

(4) *Waiver.* Manufacturers of apparatus may petition the Commission for a full or partial waiver of the closed captioning requirements of this section, which the Commission may grant, upon a finding that the apparatus meets one of the following provisions:

(i) The apparatus is primarily designed for activities other than receiving or playing back video programming transmitted simultaneously with sound; or

(ii) The apparatus is designed for multiple purposes, capable of receiving or playing back video programming transmitted simultaneously with sound but whose essential utility is derived from other purposes.

(c) *Specific technical capabilities.* All apparatus subject to this section shall implement the following captioning functionality:

(1) *Presentation.* All apparatus shall implement captioning such that the caption text may be displayed within one or separate caption windows and supporting the following modes: text that appears all at once (pop-on), text that scrolls up as new text appears (roll-up), and text where each new letter or word is displayed as it arrives (paint-on).

(2) *Character color.* All apparatus shall implement captioning such that characters may be displayed in the 64 colors defined in CEA–708 and such that users are provided with the ability to override the authored color for characters and select from a palette of at least 8 colors including: white, black, red, green, blue, yellow, magenta, and cyan.

(3) *Character opacity.* All apparatus shall implement captioning such that users are provided with the ability to vary the opacity of captioned text and select between opaque and semi-transparent opacities.

(4) *Character size.* All apparatus shall implement captioning such that users are provided with the ability to vary the size of captioned text and shall provide a range of such sizes from 50% of the default character size to 200% of the default character size.

(5) *Fonts.* All apparatus shall implement captioning such that fonts are available to implement the eight fonts required by CEA–708 and § 79.102(k). Users must be provided with the ability to assign the fonts included on their apparatus as the default font for each of the eight styles contained in § 79.102(k).

(6) *Caption background color and opacity.* All apparatus shall implement captioning such that the caption background may be displayed in the 64 colors defined in CEA–708 and such that users are provided with the ability to override the authored color for the caption background and select from a palette of at least 8 colors including: white, black, red, green, blue, yellow, magenta, and cyan. All apparatus shall implement captioning such that users are provided with the ability to vary the opacity of the caption background and select between opaque, semi-transparent, and transparent background opacities.

(7) *Character edge attributes.* All apparatus shall implement captioning such that character edge attributes may be displayed and users are provided the ability to select character edge attributes including: no edge attribute, raised edges, depressed edges, uniform edges, and drop shadowed edges.

(8) *Caption window color.* All apparatus shall implement captioning such that the caption window color may be displayed in the 64 colors defined in CEA–708 and such that users are provided with the ability to override the authored color for the caption window and select from a palette of at least 8 colors including: white, black, red, green, blue, yellow, magenta, and cyan.

All apparatus shall implement captioning such that users are provided with the ability to vary the opacity of the caption window and select between opaque, semi-transparent, and transparent background opacities.

(9) *Language.* All apparatus must implement the ability to select between caption tracks in additional languages when such tracks are present and provide the ability for the user to select simplified or reduced captions when such captions are available and identify such a caption track as ''easy reader.''

(10) *Preview and setting retention.* All apparatus must provide the ability for the user to preview default and user selection of the caption features required by this section, and must retain such settings as the default caption configuration until changed by the user.

(11) *Safe Harbor.* Apparatus which implement Society of Motion Picture and Television Engineers Timed Text format (SMPTE ST 2052–1:2010 incorporated by reference, *see* § 79.100) with respect to the functionality in paragraphs (c)(1) through (10) of this section shall be deemed in compliance with paragraph (c) of this section.

Note to paragraph (c): Where video programming providers or distributors subject to § 79.4 of this part display or render captions, they shall implement the functional requirements contained in paragraphs (c)(1) through (10) of this section unless doing so is economically burdensome as defined in § 79.4(d).

(d) *Interconnection.* All video outputs of covered apparatus shall be capable of conveying from the source device to the consumer equipment the information necessary to permit or render the display of closed captions.

■ 14. Add § 79.104 to read as follows:

§ 79.104 Closed caption decoder requirements for recording devices.

(a) Effective January 1, 2014, all apparatus designed to record video programming transmitted simultaneously with sound, if such apparatus is manufactured in the United States or imported for use in the United States, must comply with the provisions of this section except that apparatus must only do so if it is achievable as defined in § 79.103(b)(3).

(b) All apparatus subject to this section must enable the rendering or the pass through of closed captions such that viewers are able to activate and de-activate the closed captions as the video programming is played back as described in § 79.103(c).

(c) All apparatus subject to this section must comply with the interconnection mechanism requirements in § 79.103(d).

[FR Doc. 2012–7247 Filed 3–29–12; 8:45 am]

BILLING CODE 6712–01–P

Reader Aids

Federal Register

Vol. 77, No. 62

Friday, March 30, 2012

CUSTOMER SERVICE AND INFORMATION

Federal Register/Code of Federal Regulations	
General Information, indexes and other finding aids	**202–741–6000**
Laws	**741–6000**
Presidential Documents	
Executive orders and proclamations	**741–6000**
The United States Government Manual	**741–6000**
Other Services	
Electronic and on-line services (voice)	**741–6020**
Privacy Act Compilation	**741–6064**
Public Laws Update Service (numbers, dates, etc.)	**741–6043**
TTY for the deaf-and-hard-of-hearing	**741–6086**

ELECTRONIC RESEARCH

World Wide Web

Full text of the daily Federal Register, CFR and other publications is located at: **www.fdsys.gov.**

Federal Register information and research tools, including Public Inspection List, indexes, and links to GPO Access are located at: **www.ofr.gov.**

E-mail

FEDREGTOC-L (Federal Register Table of Contents LISTSERV) is an open e-mail service that provides subscribers with a digital form of the Federal Register Table of Contents. The digital form of the Federal Register Table of Contents includes HTML and PDF links to the full text of each document.

To join or leave, go to **http://listserv.access.gpo.gov** and select *Online mailing list archives, FEDREGTOC-L, Join or leave the list (or change settings);* then follow the instructions.

PENS (Public Law Electronic Notification Service) is an e-mail service that notifies subscribers of recently enacted laws.

To subscribe, go to **http://listserv.gsa.gov/archives/publaws-l.html** and select *Join or leave the list (or change settings);* then follow the instructions.

FEDREGTOC-L and **PENS** are mailing lists only. We cannot respond to specific inquiries.

Reference questions. Send questions and comments about the Federal Register system to: **fedreg.info@nara.gov**

The Federal Register staff cannot interpret specific documents or regulations.

Reminders. Effective January 1, 2009, the Reminders, including Rules Going Into Effect and Comments Due Next Week, no longer appear in the Reader Aids section of the Federal Register. This information can be found online at **http://www.regulations.gov.**

CFR Checklist. Effective January 1, 2009, the CFR Checklist no longer appears in the Federal Register. This information can be found online at **http://bookstore.gpo.gov/.**

FEDERAL REGISTER PAGES AND DATE, MARCH

12437–12720 1
12721–12980 2
12981–13180 5
13181–13482 6
13483–13958 7
13959–14264 8
14265–14470 9
14471–14678 12
14679–14950 13
14951–15230 14
15231–15554 15
15555–15932 16
15933–16130 19
16131–16424 20
16425–16650 21
16651–16906 22
16907–17320 23
17321–18098 26
18099–18670 27
18671–18898 28
18899–19058 29
19059–19520 30

CFR PARTS AFFECTED DURING MARCH

At the end of each month the Office of the Federal Register publishes separately a List of CFR Sections Affected (LSA), which lists parts and sections affected by documents published since the revision date of each title.

1 CFR

Proposed Rules:
51 16761

2 CFR

3485 18671

Proposed Rules:
Ch. I 17360
Ch. II 17360

3 CFR

Proclamations:
8778 13181
8779 13183
8780 ..... 13185, 17321
8781 13481
8782 13959
8783 14265
8784 16647
8785 16905
8786 18895
8787 18897
8788 18899

Executive Orders:
13601 12981
13602 16131
13603 16651
13604 18887

Administrative Orders:
Memorandums:
Memorandum of February 27, 2012 12721
Memorandum of February 28, 2012 12985
Memorandum of March 6, 2012 15231
Memorandum of March 16, 2012 16649
Memorandum of March 22, 2012 18891
Notices:
Notice of March 2, 2012 13179
Notice of March 13, 2012 15229

4 CFR

28 15233

5 CFR

Ch. LXXXIII 15555
9301 15555
9302 15561

Proposed Rules:
7501 ..... 14997, 16761

7 CFR

2 ..... 14951, 14952
319 ..... 12437, 15933
457 13961
761 15933
762 15933
764 15933
765 15933
766 15933
1735 15564

Proposed Rules:
15 13980
20 ..... 13990, 16768
59 16951
211 13015
235 13015
930 ..... 12748, 13015
985 13019
1260 12752
1777 14307

9 CFR

77 16661

Proposed Rules:
92 15848
93 15848
94 15848
95 15848
96 15848
98 15848
307 15976
381 ..... 13512, 15976
500 13512

10 CFR

429 13888
430 13888

Proposed Rules:
50 ..... 16175, 16483
170 15530
171 15530
430 ..... 16183, 18478
431 ..... 13026, 16769, 18963
438 ..... 14482, 18718
719 12754
1046 13206

12 CFR

701 16425
760 16425
790 16425
1228 15566

Proposed Rules:
46 16484
252 13513
325 16484
327 18109
380 18127
611 16485
612 16485
619 16485
620 16485
630 16485
Ch. X 14700
1070 15286

14 CFR

23 ..... 16907, 17323

25 .....16910, 17325, 18099
39.....12444, 12448,12450, 12989, 12991, 13187, 13191, 13193, 13483, 13485, 13488, 14679, 14681, 15939, 16135, 16137, 16139, 16143, 16145, 16147, 16151, 16155, 16428, 16430, 16432, 16661, 16914, 16916, 16917, 16919, 16921, 17327, 19059, 19061, 19063, 19065, 19067, 19069, 19071, 19074
67.....13967, 16664
71 .....12992, 13195, 14269, 15575, 16434, 16668, 16669, 17327, 18102, 18103, 19076
73.....18104
93.....19076
95.....14269
97 .....12452, 12454, 15576, 15577, 18679, 18681
1245.....14686

Proposed Rules:
16.....13027
25.....19148
39 .....12506, 12755, 12757, 13043, 13228, 13230, 13993, 14310, 14312, 14314, 14316, 15291, 15293, 15636, 15638, 15640, 15644, 15980, 16186, 16188, 16191, 16193, 16486, 16488, 16490, 16492, 16967, 16968, 18135, 18137, 18141, 18719, 18963, 18965, 18967, 18969, 18970
71 .....12759, 12760, 15295, 15297, 16783, 17360, 17362, 17363
91.....14319

16 CFR

Proposed Rules:
305.....15298

17 CFR

4.....17328
145.....17328
147.....17328
200.....13490, 18684
230.....18684
232.....19077
240.....18684
242.....18684

Proposed Rules:
43.....15460
162.....13450
248.....13450

18 CFR

39.....16435
40.....16435
806.....14272

Proposed Rules:
35.....16494
366.....12760

19 CFR

4.....17331
10.....15943
24.....15943, 17331
162.....15943
163.....15943
178.....15943

Proposed Rules:
12.....17364
111.....17367
148.....18143

20 CFR

404.....13968
410.....19079
416.....13968
655.....12723, 16157

Proposed Rules:
404.....19153
416.....19153
718.....19156
725.....19156

21 CFR

Ch. I.....15961
20.....16923
211.....16158
516.....18685
520.....15960, 15961
558.....14272
866.....14272
882.....16925
1301.....15234
1309.....15234

Proposed Rules:
Ch. 1.....13513
20.....16971
73.....16784
172.....13232
202.....16973
866.....16126
1308.....12508

22 CFR

22.....18907
42.....18907
120.....16592
123.....16592
124.....16592
126.....16592, 16670
127.....16592
129.....16592

23 CFR

627.....15250

Proposed Rules:
771.....15310

24 CFR

Proposed Rules:
891.....18723
982.....18731
1000.....19154

26 CFR

1 .....13968, 18686, 18687
20.....19080

Proposed Rules:
1 .....12514, 13996, 14321, 15003, 15319, 15646, 18145, 18146, 19154
54.....16501
301.....15004

27 CFR

4.....16671
9.....16674

Proposed Rules:
5.....18146

28 CFR

25.....18914
35.....16163
36.....16163

Proposed Rules:
35.....16196
36.....16196

29 CFR

552.....14688
1625.....19080
1910.....13969, 17574
1915.....17574
1926.....17574
4022.....15256
4044 .....14274, 14275, 15256

Proposed Rules:
1910.....13997, 18973
1915.....18973
1917.....18973
1926.....18973
1928.....18973
2590.....16501

30 CFR

250.....18916

Proposed Rules:
926.....18149
943.....18738

31 CFR

321.....16165
330.....16165
560.....16170

Proposed Rules:
Ch. X.....13046

32 CFR

240.....14955
311 .....15585, 15587, 15588, 16676
319 .....15590, 15591, 15592, 15593, 15594
322 .....15595, 15596, 19095
706.....12993, 13970

33 CFR

100 .....12456, 14959, 14963, 14965, 15258, 15597, 15600, 15602, 15604
117 .....12475, 12476, 14689, 14690, 14968, 16927, 16928, 17332, 18105
151.....17254
165 .....12456, 12994, 13971, 14276, 14471, 14970, 15260, 15261, 15263, 16170, 16929, 18688, 19095
173.....18689
174.....18689
181.....18689
187.....18689

Proposed Rules:
100 .....15006, 15320, 15323, 15647, 15981, 16974, 16978, 18984
114.....16784
116.....16784
117.....12514
118.....16784
155.....18151
165 .....13232, 13516, 13519, 13522, 13525, 14321, 14700, 14703, 15009, 15323, 16198, 18739

34 CFR

77.....18671
85.....18671
104.....14972
668.....18671
682.....18671

36 CFR

242.....12477

Proposed Rules:
7.....12761
1195.....14706

37 CFR

201.....18704, 18705
202.....18705

Proposed Rules:
201.....15327, 18742
203.....18742

38 CFR

1.....12997
17.....13195

Proposed Rules:
17 .....12517, 12522, 13236, 14707
60.....15650
61.....12698

39 CFR

4.....17333
6.....17333
7.....17333
20.....12724
111.....15605, 18707
3020.....13198

Proposed Rules:
111.....12764

40 CFR

52 .....12482, 12484, 12487, 12491, 12493, 12495, 12652, 12674, 12724, 13491, 13493, 13495, 13974, 14604, 14691, 14697, 14862, 14976, 15263, 15607, 15608, 16676, 16937, 16940, 17334, 17341, 18922, 18923, 19098
59.....14279
60.....13977, 18709
70.....15267, 16676
80.....13009
81.....16447
82.....17344
93.....14979
131.....13496
180 .....12727, 12731, 12740, 13499, 13502, 14287, 14291, 18710, 19109
261.....12497
271 .....13200, 15273, 15966
300.....15276
355.....16679
721.....13506
799.....15609
1500.....14473
1501.....14473
1502.....14473
1503.....14473
1505.....14473
1506.....14473
1507.....14473
1508.....14473

Proposed Rules:
51 .....14226, 15656, 16981
52 .....12524, 12525, 12526, 12527, 12770, 13055, 13238, 14226, 14712, 14715, 15329,

15656, 15985, 16785, 16795, 17367, 18052, 18987, 18990
59 14324
60 ....13997, 14716
63 ....16508, 16987
65 17898
70 ....14226, 16509, 16795
71 14226
82 16988
98 15590
141 15335
142 15335
158 16990
171 16990
180 ....15012, 15015, 18748
260 15336
261 15336
271 ....13248, 15343
300 ....14717, 15344
372 13061
721 ....17386, 18752
745 16796

42 CFR

84 14161
424 14989
431 17144
435 17144
457 17144
Proposed Rules:
412 13698
413 13698
495 13698

44 CFR

64 13010
65 ....12501, 12746
67 19112
Proposed Rules:
67 ....15664, 18766

45 CFR

144 16453
147 16453
153 17220
155 18310
156 18310
157 18310
158 16453
Proposed Rules:
147 16501
170 13832

46 CFR

2 18929
24 18929
30 18929
67 16172
70 18929
90 18929
91 18929
162 17254
188 18929
530 13508
531 13508
Proposed Rules:
98 14327
502 12528

47 CFR

1 16470
11 16688
15 19480
51 14297
54 ....12784, 14297, 19125
64 18106
79 19480
Proposed Rules:
1 15665
22 15665
36 16900
54 12952
73 16800
90 18991

48 CFR

Ch. 1 ....12912, 12947, 13952, 13956
1 ....12913, 12925, 14303
2 ....12913, 12925, 12937, 14303
4 ....12913, 13952, 14303
5 12927
6 ....12913, 14303
7 12925
8 12927
13 ....12913, 12930, 14303
14 ....12913, 14303
15 ....12913, 14303
16 ....12925, 12927
18 ....12913, 12927, 14303
19 ....12913, 12930, 12948, 14303
22 ....12933, 12935, 14303
25 ....12933, 12935, 13952, 14303
26 ....12913, 14303
31 12937
32 ....12925, 12937
33 ....12913, 14303
36 ....12913, 14303
38 12927
42 ....12913, 12925, 12948, 14303
45 12937
49 12937
50 12925
51 12937
52 ....12913, 12933, 12935, 12937, 12948, 13952, 14303, 17352, 17353
53 ....12913, 12937, 14303
201 ....19126, 19127
203 19128
204 19128
209 19128
212 ....14480, 19127
216 ....19128, 19132
225 13013
229 19128
252 ....13013, 19128
1852 18106
Proposed Rules:
252 14490
931 12754
952 12754
970 12754
Ch. 10 13069
2401 15681
2402 15681
2403 15681
2404 15681
2406 15681
2407 15681
2409 15681
2415 15681
2416 15681
2417 15681
2419 15681
2426 15681
2427 15681
2428 15681
2432 15681
2437 15681
2439 15681
2442 15681
2452 15681

49 CFR

191 16471
192 16471
193 16471
195 16471
214 13978
571 19132
1244 15969
1572 18716
Proposed Rules:
173 17394
571 ....15351, 19155

50 CFR

17 ....13394, 14914, 15617, 16324, 16712
92 17353
100 12477
217 16718
300 16740
622 ....15284, 15916
648 ....14481, 14697, 16472, 16942, 19138
660 ....12503, 15973
679 ....12505, 13013, 13510, 14304, 14305, 14698, 14994, 15194, 16481, 16949, 16950, 19144, 19145, 19146, 19147
Proposed Rules:
13 ....14200, 15019, 15352
17 ....12543, 13248, 13251, 14062, 14200, 15019, 15352, 16512, 18157, 18173
23 ....14200, 15019
86 18767
402 15352
600 ....15701, 19164
622 ....16991, 19165, 19169
635 ....15701, 15712, 19164, 19175
648 ....15991, 18176
679 ....13253, 15019

LIST OF PUBLIC LAWS

This is a continuing list of public bills from the current session of Congress which have become Federal laws. It may be used in conjunction with "P L U S" (Public Laws Update Service) on 202–741–6043. This list is also available online at *http://www.archives.gov/federal-register/laws*.

The text of laws is not published in the **Federal Register** but may be ordered in "slip law" (individual pamphlet) form from the Superintendent of Documents, U.S. Government Printing Office, Washington, DC 20402 (phone, 202–512–1808). The text will also be made available on the Internet from GPO's Federal Digital System (FDsys) at *http://www.gpo.gov/fdsys*. Some laws may not yet be available.

S. 1134/P.L. 112–100
St. Croix River Crossing Project Authorization Act (Mar. 14, 2012; 126 Stat. 268)

S. 1710/P.L. 112–101
To designate the United States courthouse located at 222 West 7th Avenue, Anchorage, Alaska, as the James M. Fitzgerald United States Courthouse. (Mar. 14, 2012; 126 Stat. 270)

Last List March 15, 2012

Public Laws Electronic Notification Service (PENS)

PENS is a free electronic mail notification service of newly enacted public laws. To subscribe, go to *http://listserv.gsa.gov/archives/publaws-l.html*

Note: This service is strictly for E-mail notification of new laws. The text of laws is not available through this service. **PENS** cannot respond to specific inquiries sent to this address.