United States Government Printing Office

PAPER CATALOGUE

September 2009

TABLE OF CONTENTS

Table of Contents	**3**
Law	**3**
Blank Paper & Envelopes	**4**
Direct Mill Shipment price notice	**4**
Xerographic paper	**5**
Regular stock listings	**6-15**
Envelopes	**16-17**
Cartons	**18**
Restricted stock listings	**19**
Recycled paper notice	**20**
Minimum Content Standards for recycled paper	**20**
Micrometer readings	**21**
Conversion Chart-Inches & Meters	**22**
Metric Units and Conversion Formulas	**22**
Numerical list of property numbers	**23**
Pieces Cut From Prime Stock	**24**
Additional Charges for Variations in Size & Quantity	**25**
Index	**26**

Law

The Public Printer may procure, under direction of the Joint Committee on Printing, as provided for in the act approved October 22, 1968; 82 Statute 1264, and furnish on requisition, paper and envelopes (not including envelopes printed in the course of manufacture) in common use by two or more departments, establishments, or services of the Government in the District of Columbia, and reimbursement shall be made to the Public Printer from appropriations or funds available for the purpose. Paper and envelopes so furnished by the Public Printer may not be procured in any other manner. Section 1121, Title 44, U.S. Code.

Your Paper Team, available for blank paper request:

Chief: Robert Colvin 202 512.0208

Contacts:

Ray Macon 202 512.2040
Karen Sullivan 202 512.1574
Lisa Hollingsworth 202 512.0220

Blank Paper and Envelopes

This catalog contains information and prices for blank paper, envelopes, cartons and board stock.
This catalog also contains smaller sizes that are wrapped in quantities of 500 or 1,000 sheets.
Orders and requests for further information should be addressed to the U.S. Government Printing Office, Paper and Material Control Section, Stop POL, Rm. C-701 Washington, D.C. 20401.
Telephone (202) 512.2040, 0241, 0220, 0208, Fax (202) 512.1569.

All Weights are based on 1,000 sheet units. All substance numbers are based on 500 sheet units. Orders should be placed on the basis of 1,000 sheets, or any division thereof.

Basic prices per 1,000 sheets are based on cutting to sizes of 8½ x 11 inches to10½ x16½ inches, wrapped in packages of 1,000 pieces, and to sizes 11x17 to 19 x 24 inches, wrapped in packages of 500. Prices for cutting to sizes smaller than 8½ x11 inches and for wrapping in sizes over 11x17 in packages of less than 500 are quoted on page 25. See supplemental charges on page 25 for cut sizes on skids and for cutting and wrapping of gummed stock and plyboards.

Items in this catalog may be ordered on Standard Form 1 and the property number of the desired item must be indicated thereon.

The minimum charge per order is $15.00. Although generally prices listed herein are in effect semi-annually, they are subject to change at any time during the year.

Direct Mill Shipments: The prices in this paper catalog do not apply to blank paper orders that are shipped directly to ordering agencies from the mill. All direct mill shipments of blank paper will be billed at the actual cost of the individual purchase, including freight charges, plus six percent.

All Prices F.O.B. Washington, D.C.

GPO bills of lading will be used on out-of-town shipments unless otherwise instructed.

Prices subject to change; prices charged are those in effect on the date of shipment.

All orders for full size sheets of paper delivered from GPO inventory will be issued in even skids provided it does not exceed 10% plus or minus the quantity ordered by the agency. Exact quantities will be delivered if specified on the Standard Form 1.

Delivery two weeks after receipt of order.

This Catalog is available on line at: http://www.gpo.gov/customers/paper.htm

Property	Lot	Description Min. Order for Mill Shipment	Mill Shipment[1] 1-5 Days	Warehouse[1] 1-5 Days	Delivery Calendar Days
		Xerographic Plain Copier Paper (Basis 17 x 22 sub. 20-lbs.) Grain Long 30% Postconsumer Recycled Xerographic Plain Copier Paper JCP O-65			
5543-3	269b	8½ x 11 (4,200m & over)	$5.79/m	n/a	5
5559-0	269c	8½ x 11 (600m - 3,800m)	5.85	$7.45/m	5
5604-9	269g	8½ x 11 (200m & Up)[4]	6.03	7.68	5
5601-4	269g	8½ x 11 (200m & Up)[2]	6.03	7.68	5
5590-5	269h	8½ x 11 (200m & up)[3]	6.63	8.46	5
5676-6	269i	8½ x 11 (4,400m & Up)[2]	5.84	n/a	5
5626-0	269j	8½ x 14 (150m - 900m)	8.36	10.65	5
5539-5	269k	11 x 17 (100m & up)	13.36	17.01	5
		Virgin Xerographic Plain Copier Paper (Basis 17 x 22 sub. 20-lbs.) JCP O-60 (Non-complying with EO 12873 for copier paper)			
5457-7	270	8½ x 11 (4,400m & over)	5.34	n/a	5
5455-1	270a	8½ x 11 (400m - 3,800m)	5.54	7.06	5
5458-5	270d	8½ x 14 (150m - 900m)	7.75	9.87	5
548-7	270f	8½ x 11 (200m & up)[3]	6.13	7.80	5
5600-6	270h	8½ x 11 (200m & up) Blue	8.27	10.53	5
5693-6	270h	8½ x 11 (200m & up) Buff	8.27	10.53	5
5694-4	270h	8½ x 11 (200m & up) Green	8.27	10.53	5
5639-1	270h	8½ x 11 (200m & up) Pink	8.27	10.53	5
5700-2	270h	8½ x 11 (200m & up) Salmon	8.27	10.53	5
5642-1	270h	8½ x 11 (200m & up) Yellow	8.27	10.53	5
5957-9	270k	11 x 17 (100m & up)	12.81	16.31	5
		White Laser Copier Paper (Basis 17 x 22 sub. 24) JCP O-61			
7344-0	OM	8½ x 11 (200m & up)	8.27	10.53	5
7347-4	OM	8½ x 14 (150m & up)	12.51	15.93	5
7348-2	OM	11 x 17 (100m & up)	18.23	23.20	5

[1]All "Mill" order quantities are to be in multiples of full pallets. All warehouse deliveries are to be in multiples of full cartons. The 8½ x 11" size is packaged 5,000 per carton, 500 per wrap and 200,000 per pallet. The 8½ x 14" size is packaged 5,000 per carton, 500 per wrap and 150,000 per pallet. The 11 x 17" size is packaged 2,500 per carton, 500 per wrap and 100,000 per pallet.

[2] Inside or platform delivery of full pallets (not broken down).

[3] Drilled with three (3) 1/4" or 5/16" diameter holes, centered on the 11" left side, 4¼" center to center, ⅜ from 11" edge to the center of the holes.

[4] Inside delivery of cartons.

Prop. No.	Lot No.	Description of Paper	Sheet Size	Weight per 1,000 Sheets	Basis Weight	Price Per 1,000 Sheets	Cut & Wrap 8 ½ x 11 through 10½ x 16½	Cut & Wrap 11 X 17 through 19 x 24

NEWSPRINT

Natural Shade (basis 24 x 36" (610 x 914 mm) JCP A10
(First dimension is roll Width)

			INCHES	LBS	LBS		
13-2	2	23 roll	23 x 35	52	28	$26.52	AC
14-1	2	34½ roll	34½ x 35	78	28	40.30	
15-9	2	46 roll	46 x 35	104	28	54.00	

BOOK PAPER

Heat-Set Offset, M.F., White (basis 25 x 38" (635 x 965 mm) JCP A25

3805-9	5	28½ roll	28½ x 25	53	35	39.39
3839-3	5	38 roll	38 x 25	70	35	61.12

End Paper, M.F., White (basis (25 x 38" 635 x 965 mm) JCP A50
(Grain short)

46-9	7	Flat Sheet	38 x 50	320	80	279.30

Antique, White (basis (25 x 38" 635 x 965 mm) JCP A100
(Grain long)

75-2	28	Flat sheet	28 x 40	141	60	257.20

Antique, 50% White (basis (25 x 38" 635 x 965 mm) JCP A110
(Grain long)

8442-5	30	Flat Sheet	25 x 38	120	40	172.50
*8896-0	30	Flat Sheet	40¾ x 55	189	40	407.50

Antique, 50% Laid, White (basis (25 x 38" 635 x 965 mm) JCP A120
(Grain long)

83-3	34	Flat sheet	25 x 38	140	70	295.11

AC-Additional charge for cut & wrap.
*** To be discontinued. Contact GPO concerning availability on telephone number (202) 512-0208.**

Prop. No.	Lot No.	Description of Paper	Sheet Size	Weight per 1,000 Sheets	Basis Weight	Price Per 1,000 Sheets	Cut & Wrap 8 ½ x 11 through 10½ x 16½	Cut & Wrap 11 X 17 through 19 x 24

BOOK PAPER-Continued

Offset, White (basis (25 x 38" 635 x 965 mm) JCP A60

			INCHES	LBS	LBS		
*10202-4	16	Flat sheet	24 x 38	77	40	$67.60	AC
10250-4	16	Flat sheet	25 x 38	80	40	89.20	
10101-0	19a	Flat sheet	17 x 22	39	50	30.90	
11232-1	17	Flat sheet	23 x 35	85	50	75.40	
11251-8	17	Flat sheet	25 x 38	100	50	88.70	
11259-3	17	Flat Sheet	28 x 40	118	50	104.70	
13719-7	17	Flat sheet	35 x 45	166	50	147.20	
12222-0	21	Flat sheet	20 x 28	71	60	55.10	
12234-3	21	Flat sheet	23 x 35	102	60	84.40	
12250-5	21	Flat sheet	25 x 38	120	60	106.92	
+10110-9	21a	Flat sheet	8½ x 11	12	60	7.83	
13316-7	21f	Flat sheet	17½ x 22½”	50	60	40.50	

Offset, White (basis 635 x 965 mm (25 x 38") JCP A60

(Grain long)

#15754-6	18b	17 roll	17 x 22	39	50	25.56

AC-Additional charge for cut & wrap.
+ May be wrapped in packages of 500 or 1,000 sheets at option of supplier.
 # Wrapped two rolls per package
*** Discontinued**

Prop. No.	Lot No.	Description of Paper	Sheet Size	Weight per 1,000 Sheets	Basis Weight	Price Per 1,000 Sheets	Cut & Wrap 8 ½ x 11 through 10½ x 16½	Cut & Wrap 11 X 17 through 19 x 24

BOOK PAPER-Continued

Heat-Set Offset, White (basis 25 x 38" (35 x 965 mm) JCP A55

		INCHES	INCHES	LBS	LBS		
12753-1	13	21½ roll	21½ x 35	63	40	$48.08	AC
12500-8	13	23 roll	23 x 35	68	40	56.24	
12560-1	13	28½ roll	28½ x 25	60	40	50.00	
12754-0	13	32¼ roll	32¼ x 35	95	40	77.78	
12754-0	13	32¼ roll	32¼ x 25	68	40	55.68	
12754-0	13	32¼ roll	32¼ x 22¾	62	40	50.76	
15782-1	13	34½ roll	34½ x 35	102	40	92.89	
12561-0	13	38 roll	38 x 25	80	40	65.32	
12755-8	13	43 roll	43 x 35	127	40	101.72	
12809-1	13	46 roll	46 x 35	136	40	111.52	
13402-3	14	23 roll	23 x 35	85	50	61.82	
12562-8	14	28½ roll	28½ x 25	75	50	56.52	
12388-9	14	34½ roll	34½ x 35	127	50	83.64	
12388-9	14	34½ roll	34½ x 25	90	50	59.27	
12563-6	14	38 roll	38 x 25	100	50	77.20	
12758-2	14	43 roll	43 x 35	158	50	121.80	
12547-4	14	46 roll	46 x 35	169	50	130.50	

Heat-Set Offset, White (basis 25 x 38" (635 x 965 mm) JCP A55

12565-2	15	38 roll	38 x 25	120	60	93.59
15788-1	15	43 roll	43 x 35	190	60	168.32

Opacified Offset, White (basis 25 x 38" (635 x 965 mm) JCP A80

(Grain long)

2552-6	24a	Flat sheet	25 x 38	120	60	110.60

Litho Coated, White (basis 25 x 38" (35 x 965 mm) JCP A180

(Grain long)

5902-1	47	Flat Sheet	25 x 38	140	70	157.00

Matte Coated, White (basis 25 x 38" (35 x 965 mm) JCP A240

(Grain long)

146-5	50	Flat Sheet	25 x 38	120	60	193.10
145-7	OM	Flat Sheet	25 x 38	140	70	160.70

Dull Coated, White (basis 25 x 38" (35 x 965 mm) JCP A260

(Grain long)

149-0	OM	Flat Sheet	25 x 38	140	70	180.36

AC-Additional charge for cut & wrap.

Prop. No.	Lot No.	Description of Paper	Sheet Size	Weight per 1,000 Sheets	Basis Weight	Price Per 1,000 Sheets	Cut & Wrap 8 ½ x 11 through 10½ x 16½	Cut & Wrap 11 X 17 through 19 x 24

WRITING PAPER

Colored, Flat Sheet (basis 17 x 22" (432 x 559 mm) JCP D10
(Grain long)

			INCHES	LBS	LBS		
284-4	69	Blue	34 x 44	160	20	$209.10	AC
299-2	69	Buff	34 x 44	160	20	209.10	
313-1	69	Green	34 x 44	160	20	209.10	
333-6	69	Pink	34 x 44	160	20	209.10	
347-6	69	Salmon	34 x 44	160	20	209.10	
372-7	69	Yellow	34 x 44	160	20	209.10	

AC-Additional charge for cut & wrap.

Prop. No.	Lot No.	Description of Paper	Sheet Size	Weight per 1,000 Sheets	Basis Weight	Price Per 1,000 Sheets	Cut & Wrap 8 ½ x 11 through 10½ x 16½	Cut & Wrap 11 X 17 through 19 x 24

BOND PAPER

White 25% Recycled Bond (basis 17 x 22" (432 x 559 mm) JCP G45 (1 Star)
(Grain long except Prop. 585-1 grain short)

**7806-9	128a	Flat sheet	8½ x 11	10	20	$14.31	AC
579-7	128	Flat sheet	17½ x 22½	42	20	57.24	
585-1	128	Flat sheet	35 x 23	86	20	119.50	

White 25% Bond 100% Recycled (basis 17 x 22" (432 x 559 mm) JCP G45 (1 Star)
(Grain Long)

617-3	129	Flat sheet	17½ x 22½	51	24	75.20

50% White Bond (basis 17 x 22" (432 x 559 mm) JCP G70 (2 Stars)
(Grain Long)

602-5	131	Flat sheet	17½ x 22½	42	20	95.90

**** May be wrapped in packages of 500 or 1,000 sheets at option of supplier.**
AC-Additional charge for cut & wrap.

Prop. No.	Lot No.	Description of Paper	Sheet Size	Weight per 1,000 Sheets	Basis Weight	Price Per 1,000 Sheets	Cut & Wrap 8 ½ x 11 through 10½ x 16½	Cut & Wrap 11 X 17 through 19 x 24

LEDGER PAPER

White (basis 432 x 559 mm (17 x 22") JCP J10
(Grain short)

			INCHES	LBS	LBS		
623-8	OM	Flat sheet	23 x 35	138	32	$240.33	AC

Colored, Flat Sheet (basis 432 x 559 mm (17 x 22") JCP J1O
(Grain long)

5025-3	151	Blue	34 x 44	256	32	366.60
5027-0	151	Buff	34 x 44	256	32	366.60
5029-6	151	Green	34 x 44	256	32	366.60
5030-0	151	Pink	34 x 44	256	32	366.60
5031-8	151	Salmon	34 x 44	256	32	366.60
5033-4	151	Yellow	34 x 44	256	32	366.60

AC-Additional charge for cut & wrap.

Prop. No.	Lot No.	Description of Paper	Sheet Size	Weight per 1,000 Sheets	Basis Weight	Price Per 1,000 Sheets	Cut & Wrap 8 ½ x 11 through 10½ x 16½	Cut & Wrap 11 X 17 through 19 x 24

INDEX PAPER

White (basis 25½ x 30½" (648 x 775 mm) JCP K10
(Grain long)

		INCHES	INCHES	LBS	LBS		
724-2	OM	(17) roll	17 x 22	87	c90	$60.48	AC
7147-1	OM	Flat Sheet	22½ x 35	182	c90	224.78	
789-7	OM	Flat Sheet	24 x 36	244	c110	229.00	

Colored, Flat Sheet (basis 25½ x 30½" (648 x 775 mm) JCP K10
(Grain long)

7477-2	OM	Blue	22½ x 35	223	c110	232.07
7104-8	185	Buff	34 x 44	423	c110	611.90
7116-1	185	Green	34 x 44	423	c110	611.90
7126-9	185	Pink	34 x 44	423	c110	611.90
7038-6	OM	Salmon	22½ x 35	223	c110	238.14
7132-3	185	Yellow	34 x 44	423	c110	611.90

25% White (basis 25½ x 30½" (648 x 775 mm) JCP K20
(Grain long)

5142-0	189	Flat Sheet	17 x 22	135	c140	215.20
487-1	OM	Flat Sheet	24 x 36	654	c175	513.00

c-Cardstock
AC-Additional charge for cut & wrap.

Prop. No.	Lot No.	Description of Paper	Sheet Size	Weight per 1,000 Sheets	Basis Weight	Price Per 1,000 Sheets	Cut & Wrap 8 ½ x 11 through 10½ x 16½	Cut & Wrap 11 X 17 through 19 x 24

COVER PAPER

Litho Coated, White, Flat Sheet (basis 20 x 26" (508 x 660 mm) JCP L10
(Grain long)

			INCHES	LBS	LBS		
903-2	200	White	26 x 40	320	c80	$362.61	AC

Vellum Finish, White and Colored, Flat Sheet (basis 20 x 26" (508 x 660 mm) JCP L20
(Grain long except Prop. 922-9 grain short)

922-9	OM	White	25 x 38	183	50	222.30
900-8	202	White	18 x 23	80	50	99.40
911-3	202	White	25¼ x 38	185	50	229.80
918-1	203	Dutch blue	25¼ x 38	185	50	474.10
*6980-9	203	Dutch blue	36 x 46	318	50	814.90
921-1	203	Venice blue	25¼ x 38	185	50	474.10
919-9	203	Brown	25¼ x 38	185	50	474.10
923-7	203	Peach tan	25¼ x 38	185	50	474.10
939-3	203	Sand gray	25¼ x 38	185	50	474.10
940-7	203	Light gray	25¼ x 38	185	50	474.10
*6983-3	203	Light gray	36 x 46	318	50	814.90
927-0	203	Dawn gray	25¼ x 38	185	50	474.10
941-5	203	Killarney green	25¼ x 38	185	50	474.10
*6984-1	203	Killarney green	36 x 46	318	50	814.90
926-1	203	Victoria green	25¼ x 38	185	50	474.10
*6985-0	203	Victoria green	36 x 46	318	50	814.90
929-6	203	Sun orange	25¼ x 38	185	50	474.10
930-0	203	Canary yellow	25¼ x 38	185	50	474.10
931-8	203	Vermilion	25¼ x 38	185	50	474.10

Vellum Finish, White, Flat Sheet (basis 20 x 26" (508 x 660 mm) JCP L20
(Grain long)

957-1	206	White	26 x 40	260	c65	168.50

c-Cardstock
AC-Additional charge for cut & wrap.
***Discontinued**

Prop. No.	Lot No.	Description of Paper	Sheet Size	Weight per 1,000 Sheets	Basis Weight	Price Per 1,000 Sheets	Cut & Wrap 8 ½ x 11 through 10½ x 16½	Cut & Wrap 11 X 17 through 19 x 24

COVER STOCK-Continued

Matte Coated, White, Flat Sheet (basis 20 x 26" (508 x 660 mm) JCP L50
(Grain long)

890-7	210	White	26 x 40	260	c65	$303.10	AC

Dull Coated, White, Flat Sheet (basis 20 x 26" (508 x 660 mm) JCP L60
(Grain long)

932-6	212	White	26 x 40	320	c80	421.40

U.S. POSTAL CARD
White (basis 22½ x 28½" (572 x 724 mm) JCP Q60
(Graln long)

1945-3	326a	Flat sheet	36½ x 45	456	c89	445.60

MISCELLANEOUS

Parchment Deed, 100% White (basis 17 x 22" (432 x 559 mm) JCP H10
(Grain long)

1166-5	135	Flat sheet	34 x 44	256	32	812.40

Fine Writing Paper, 100% White (basis 17 x 22" (432 x 559 mm) JCP D50
(Grain long)

1181-9	87	Flat sheet	34½ x 44½	230	28	564.00

Artificial Parchment, 100% Cream-White (basis 17 x 22" (432 x 559 mm) JCP H20
(Grain Long)

1168-1	138	Flat Sheet	34 x 44	376	c47	1,100.30

Imitation Parchment, Text, White (basis 23 x 38" (584 x 965) JCP-H30
(Grain Long) (Enrolled Bills)

414-6	OM	Flat Sheet	23 x 35	102	60	417.20

c-Cardstock
AC-Additional charge for cut & wrap.

Prop. No.	Lot No.	Description of Paper	Sheet Size	Weight per 1,000 Sheets	Basis Weight	Price Per 1,000 Sheets	Cut & Wrap 8 ½ x 11 through 10½ x 16½	Cut & Wrap 11 X 17 through 19 x 24

BOARDS

Railroad Board, White (basis 22½ x 28½" (572 x 724 mm) JCP Q20

(Grain long)

		Approximate Thickness Inches	Inches	IBS	IBS		
1105-3	301	.018	22 x 34	490	c210	$462.90	AC
1087-1	302	.030	22 x 28	500	c350	2,429.20	
1092-8	303	.048	22 x 28	810	c492	3,779.50	

Railroad Board, Colored (basis 22½ x 28½" (2 x 724 mm) .017 thick JCP Q20

(Grain long)

1140-1	OM	Emerald	22 x 28	252	c210	2,435.00
1177-1	OM	Orange	22 x 28	252	c210	2,435.00
1173-8	OM	Red	22 x 28	252	c210	2,435.00
1100-2	OM	Gray	22 x 28	252	c210	2,435.00
1146-1	OM	Azure	22 x 28	252	c210	2,435.00
1170-3	OM	Pearl	22 x 28	252	c210	2,435.00
1169-0	OM	Buff	22 x 28	252	c210	2,435.00

Newsboard (Weight 26 x 38" (660 x 965 mm) 50 lb. per 100 sheets) JCP R20)

					BOARDS PER	
1242-4	360a	Gray	34 x 44	757	66	440.40
1256-4	360c	Gray	42½ x 56	1204	41	697.60

Binder's Board (basis 25¼ x 30¼" (641 x 768 mm) JCP R30

		Approximate Thickness		BOARD NO.		
3019-8	366d	.049	25 x 31¾	1267	41	558.30
3054-6	367	.098	25¾ x 37¾	3030	21	3,621.92
3013-9	366e	.168	34 x 44	8161	12	7,006.50

Corrugated Board (Double Faced)

(Flat sheet)

2709-0	538	.125	35 x 45	1118	926.80

c-Cardstock
AC-Additional charge for cut & wrap.

ENVELOPES

Kraft, Open side gummed (basis 17 x 22" (432 x 559 mm)

Prop. No.	Lot No.	M/Weight	Size of Envelope Box/Carton	Quantity	Weight	Basis	Price per 1,000
		LBS	INCHES		g/m²	SUB	
*1302-1	408	(12)	(4⅛ x 9½)	500/5000	90	(24)	$37.13
1310-2	414	(22)	(6 1/16 x 9½)	1000	90	(24)	80.33
4045-2	415	(24)	(6 1/16 x 10½)	1000	90	(24)	44.55
1313-7	422	(38)	(8½ x 11½)	500	120	(32)	96.66
1315-3	424	(48)	(9½ x 12)	500	120	(32)	69.93
4429-6	425 (Side seam)	(48)	(9½ x 12)	500	120	(32)	81.14
1317-0	426	(76)	(10 x 15)	250	150	(40)	179.96
1319-6	430	(97)	(12 x 16)	250	150	(40)	200.07
1321-8	432 (Side seam)	(145)	(14½ x 18)	250	150	(40)	565.25

Kraft, Open end ungummed (basis 17 x 22" (432 x 559 mm)

4293-5	OM	(12)	(5½ x 7½)	1000	90	(24)	155.25
4355-9	OM	(160)	(20 x 25)	250	105	(28)	924.08

Writing, (C.W.) White, O.S.G. (basis 17 x 22" (432 x 559 mm)

1335-8	479	(7)	(3⅝ x 6½)	500/5000	75	(24)	33.08
1337-4	480	(10)	(3⅞ x 8⅞)	500/5000	75	(20)	17.96
1338-2	OM (Die cut)	(11)	(4⅛ x 9½)	500/5000	75	(20)	24.03
1294-7	481b(Side seam)	(11)	(4⅛ x 9½)	500/5000	75	(20)	17.01
1340-4	482	(17)	(4½ x 10⅜)	500/ †	75	(20)	53.46
1343-9	482b	(20)	(6 1/16 x 10½)	1000	75	(20)	51.98
1352-8	481	(13)	(4⅛ x 9½)	500/2500	75	(24)	19.04

Bond, 25% White O.S.G. (basis 17 x 22" (432 x 559 mm)

1360-9	455	(13)	(4⅛ x 9½)	500/5000	90	(24)	49.28
1362-5	459	(12)	(4¾ x 7⅜)	500/5000	90	(24)	146.48

Fine Writing, 100% White O.S.G. (basis 17 x 22" (432 x 559 mm)

4029-1	474	(16)	(4⅛ x 9½)	500/5000	105	(28)	97.07
1379-0	477	(12)	(4¾ x 6¾)	500/5000	105	(28)	137.84
1381-1	478	(13)	(4¾ x 7⅜)	500/5000	105	(28)	175.50

Writing (C.W.) White O.S.G. (basis 17 x 22" (432 x 559 mm)

(Window (Square) Transparent & Clear-Size 1¼" x 4¾"- ¾" from left-½"- from bottom)

4107-6	487	(11)	(3⅞ x 8⅞)	500/5000	75	(24)	76.55
1395-1	488	(13)	(4⅛ x 9½)	500/2500	90	(24)	22.28

† 2500 or 5000 at contractor's option.

*** Discontinued**

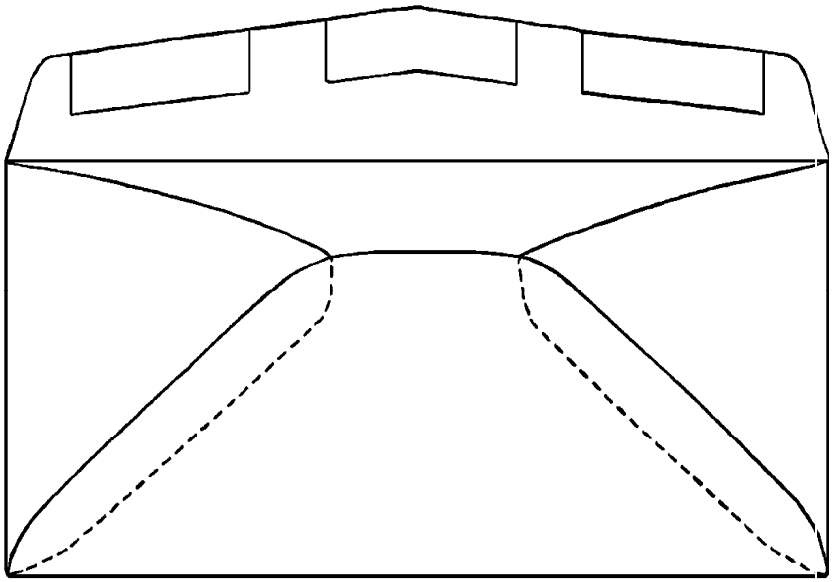

Property 1338-2 High Cut Diagonal Seam Envelope

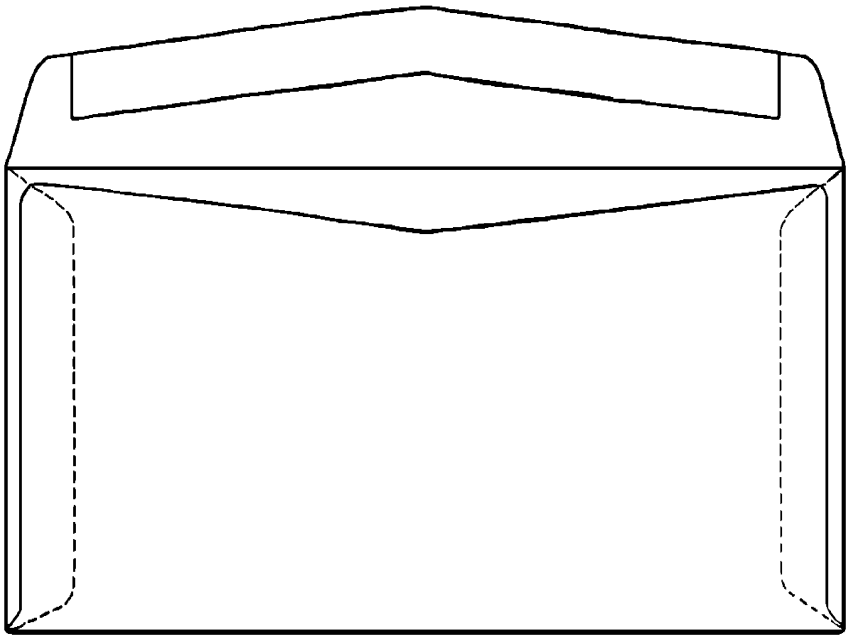

Property 1294-7 Web Style Side Seam Envelope

CARTONS

Bursting Strength 1900 kPa (275 PSI)

Prop. No	Lot	No. Description	Size of carton	†Scores Above fold	Price per 1,000
9092-1	523	Cor. (Scored)	(12½ x 9¼ x 5)	4	$681.80
9093-0	507	Cor. (Scored)	(16½ x 11 x 6¾)	3	1,512.00
9096-4	507c	Cor. (Scored)	(16½ x 11 x 10⅛)	3	1,682.20
9099-9	508	Cor. (Scored)	(17½ x 11½ x 6¾)	3	985.50
9100-6	508a	Cor. (Scored)	(17½ x 11½ x 7⅞)	3	1,138.90
9101-4	508b	Cor. (Scored)	(17½ x 11½ x 9)	3	1,138.20
9120-1	508c	Cor. (Scored)	(17½ x 11½ x 10⅛)	3	1,262.30
9104-9	508e	Cor. (Scored)	(17½ x 11½ x 12⅜)	3	2,335.80
9111-1	521	Cor. (Scored)	(18½ x 12½ x 7)	4	1,038.20
9118-9	533	Cor. (Scored)	(19½ x 12½ x 8)	4	1,392.50
9119-7	536	Cor. (Scored)	(12½ x 9¼ x 3½)	4	769.50
9599-1	519a	Cor.	(11¾ x 9¼ x 9)	--	671.50

† This column indicates the number of scores above the normal flap fold.

Prop No.	Lot No.	Description of Paper	Sheet Size	Weight per 1,000 Sheets	Basis Weight	Price Per 1,000 Sheets	Cut & Wrap 8 ½ x 11 through 10½ x 16½	Cut & Wrap 11 X 17 through 19 x 24

KRAFT WRAPPING PAPER

No. 2 (basis 24 x 36" (610 x 914 mm) JCP N10

			INCHES	LBS	LBS		
1014-6	219c	Flat sheet	40 x 48	267	60	276.60	AC

No. 2 (Rolls-maximum 9" (229mm diam.) JCP N10
(Senate)

1007-3	OM	24 rolls	24 x 36	100	50	115.24

No. 2 (Rolls-maximum 36" (914mm diam.) JCP N10
(Bindery)

1055-3	220f	36 rolls	36 x 24	160	80	93.23

AC-Additional charge for cut & wrap.

Items having the word "only" following the specific use indicated shall not be issued for any other purpose. Items not so qualified may be issued with reservations for purposes other than indicated. In all cases, However, the Chief, Paper & Materials Control Section, must be contacted to determine availability.

Prop. No.	Lot No.	Description of Paper	Sheet Size	Weight per 1,000 Sheets	Basis Weight	Price Per 1,000 Sheets	Cut & Wrap 8 ½ x 11 Through 10½ x 16½	Cut & Wrap 11 X 17 through 19 x 24

RESTRICTED ITEMS

COVER PAPER

Vellum Finish, White and Colored, (basis 20 x 26" (508 x 660 mm) JCP L20
(Grain Long)(Supreme Court)

927-0	203	Dawn gray	25¼ x 38	185	50	$467.10	AC

PASSPORT PAPER, 50% White (basis (17 x 22" (432 x 559 mm)
(Grain Long)

5871-8	OM	Text	25 x 35	140.6	30	1,057.19
5872-6	OM	End Sheet	25 x 35	112	24	917.73

CARD

Strathmore Fairfield, White
(Grain Long)

2777-4	OM	Flat Sheet	23 x 35	354	c210	599.54

STATIONERY

Matching Stationery for Embossing, Bond, 100% White (basis 17 x 22" (432 x 559 mm)
(Grain short)

2108-3	OM	Flat sheet	28 x 34	102	24	803.10

CARTONS

Bursting Strength 1900 kPa (275 PSI)
INCHES
(PASSPORT)

9613-0	517	24 page	10⅜ x 9⅛ x 7⅜	--	605.07
9238-0	OM	48 page	13⅜ x 10⅝ x 7⅜	--	1,417.50

TRIPLE WALL CONTAINER

Bursting Strength 7 600 kPa (1100 PSI)

9762-4	555	47 x 39 x 35½	--	27,877.40

AC-Additional charge for cut & wrap.
c-Cardstock

Recycled paper contains recovered materials (cotton/linen), postconsumer recovered materials or wastepaper. The U.S. Government Printing Office (GPO) began purchasing paper in conformance with the recommended Environmental Protection Agency "Minimum Content Standards" in August of 1989. GPO uses recycled paper on jobs printed in-house, and for blank stock furnished to agencies both from our warehouse and on direct mill shipments.

RECYCLED PAPER

MINIMUM CONTENT STANDARDS

(Revised February 1, 2008)

JCP Code	GPO Lot Number	Minimum% Of Recovered Materials (cotton/linen)	Minimum% of post-consumer fiber materials
JCP A10	2	...	40
JCP A25	5	...	30
JCP A50	7	...	30
JCP A55	13, 14, 15	...	30
JCP A60/360	16 to 22	...	30
JCP A80	24ato 24b	...	30
JCP A100	28	...	30
JCP A110	30	50	...
JCP A120	34	50	...
JCP A180	47	...	10
JCP A220	48	...	30
JCP A240	50 to 50a	...	10
JCP A260	51	...	10
JCP D10	69	...	30
JCP D50	87	100	...
JCP E10	90	50	...
JCP E20	92b	...	10
JCP E30	93b	...	30
JCP E40	94	...	20
JCP E50	95	50	...
JCP G10	108	...	30
JCP G45[1]	128 to 128a[1]	25	30
JCP G45[2]	129[2]	70	30
JCP G50	126	25	...
JCP G70	130 to 131	50	30[3]
JCP H40	137	100	...
JCP H10	135	100	...
JCP H20	138	100	...
JCP H30	140	...	30
JCP J10	148 to 152	...	30
JCP K10	180 to185a, 191,192	...	20
JCP K20	188a to 190	25	20[3]
JCP L10	200	...	10
JCP L20	202 to 206	...	30
JCP L50	210	...	10
JCP L60	212	...	10
JCP N10	219a to 220f	...	5
JCP O50	268	...	10
JCP O65	269b to 269k	...	30
JCP O65	270 to 270k	...	...
JCP Q20	301 to 303	65	15
JCP Q60	326a	...	20[1]
JCP R11	352	30	20
JCP R20	360a to 360c	...	80
JCP R30	366a to 368	...	80
JCP V10	408 to 445(Excluding 432)	...	20
JCP V10	432	100	...
JCP V40	455 to 459	25	...
JCP V80	474 to 478	100	...
JCP V20/320	479 to 488	...	30
JCP V90	491 to 494	...	25

The minimum percentage is the percentage of recovered fiber weight to total fiber weight used.

---

1 **Total percentage of recovered material must be a minimum of 50%.**

2 **Total percentage of covered material is 100%.**

3 **If a postconsumer recovered fiber is used, it counts towards recovered material including cotton/linen' category. Recovered material is not postconsumer fiber.**

APPROXIMATE MICROMETER READINGS

Kind of Paper	Substance lbs	Substance g/m²	Thickness in	Thickness (mm)	Page No.
Newsprint	25	(41)	.0028	(.0071)	6
"	28	(46)	.0030	(.7620)	6 & 19
Machine Finish Book	35	(52)	.0025	(.0560)	6
" " " End Paper	80	(118)	.0060	(.1524)	6
Vellum-Finish Offset Book	50	(74)	.0042	(.1067)	
Antique Book	40	(59)	.0035	(.0889)	6 & *19
" "	45	(67)	.0038	(.0965)	
" "	50	(74)	.0043	(.1092)	
" "	60	(89)	.0050	(.1270)	6
" " (Laid 50% Rag)	70	(104)	.0055	(.1397)	6
Water Resistant Offset Text	60	(89)	.0042	(.1067)	9
Offset Book	40	(59)	.0029	(.0737)	9
" "	50	(74)	.0039	(.0991)	9
" "	60	(89)	.0047	(.1194)	9
" "	70	(104)	.0050	(.1270)	
" "	80	(118)	.0063	(.1600)	9
" Opacifed	60	(89)	.0047	(.1194)	8
Coated Book Dull	70	(104)	.0036	(.0914)	8
" " Lithograph (Offset)	50	(74)	.0025	(.0635)	
" " " "	60	(89)	.0030	(.0762)	
" " " "	70	(70)	.0033	(.0838)	8
Matte coated Book	60	(89)	.0038	(.0965)	8
" " "	70	(104)	.0044	(.1118)	8
" " "	80	(118)	.0050	(.1270)	
Map, 50% Rag	20	(75)	.0030	(.0762)	9
" High Wet Strength	24	(90)	.0042	(.1067)	9
Writing	20	(75)	.0038	(.0965)	9
Translucent Bond	13	(49)	.0021	(.0533)	
" " 25% Rag	16	(60)	.0025	(.0635)	
Bond	16	(60)	.0033	(.0838)	10
"	20	(75)	.0038	(.1067)	10
"	24	(90)	.0044	(.1194)	10
Fine Writing	28	(105)	.0060	(.1524)	14
Ledger	24	(90)	.0042	(.1067)	11
"	32	(120)	.0060	(.1371)	11
"	44	(166)	.0072	(.1829)	11
Index	90	(163)	.0074	(.1880)	12
"	110	(199)	.0090	(.2286)	12
"	140	(253)	.0115	(.2921)	12
"	170	(307)	.0139	(.3531)	12
Cover Coated	60	(162)	.0060	(.1524)	
" "	80	(216)	.0072	(.1829)	13
" Vellum	50	(135)	.0070	(.1778)	13
" "	65	(176)	.0090	(.2286)	14
" Matte Coated	65	(176)	.0065	(.1651)	14
" " "	80	(216)	.0100	(.2540)	
" Dull Coated	80	(216)	.0081	(.2057)	14
" Tan Board	100	(271)	.0098	(.2489)	
Kraft	40	(65)	.0042	(.1067)	
"	50	(81)	.0050	(.1270)	18
"	60	(98)	.0060	(.1524)	18
"	70	(114)	.0069	(.1753)	18
"	80	(130)	.0077	(.1956)	18
Manila, C. W	70	(154)	.0060	(.1524)	
Tagboard, High Finish	150	(244)	.0125	(.3175)	
" Jute	140	(228)	.0140	(.3556)	
Manila Board	200	(439)	.0230	(.5842)	
Railroad Board	210	(461)	.0180	(.4572)	15
" "	350	(768)	.0300	(.7620)	15
" "	492½	(1080)	.0480	(1.2192)	15
U.S. Postal Card	89	(195)	.0090	(.2286)	13
Pressboard	450	(987)	.0200	(.6350)	
Newsboard	250	(548)	.0200	(.5080)	15
Artificial Parchment	47	(177)	.0090	(.3556)	14
Parchment Deed	32	(120)	.0055	(.1397)	14

*Restricted item.

Envelopes

Bond, Kraft, Wove or Writing	20	(75)	.0040	(.1016)	16
" " " "	24	(90)	.0050	(.1270)	16
" " " "	28	(105)	.0060	(.1524)	16
" " " "	32	(120)	.0070	(.1778)	16

Inches and Millimeters: Conversion Table			
8½ x 11	(216 x 279)	36 x 44	(914 x 1,118)
8½ x 14	(216 x 356)	36 x 46	(914 x 1,168)
14 x 17	(355 x 431)	36 x 48	(914 x 1,219)
17 x 22	(432 x 559)	36 x 54	(914 x 1,372)
17½ x 22½	(444 x 572)	36 x 58	(914 x 1,473)
18 x 22	(457 x 558)	36½ x 45	(927 x 1,143)
21 x 32	(533 x 812)	37 x 44	(939 x 1,118)
22 x 27	(558 x 685)	37 x 45	(939 x 1,143)
22½ x 35	(572 x 889)	38 x 48	(965 x 1,219)
23 x 27	(584 x 685)	38 x 50	(965 x 1,270)
24 x 36	(609 x 914)	38 x 53	(965 x 1,346)
25 x 38	(635 x 965)	39 x 46	(991 x 1,168)
25¼ x 38	(641 x 965)	39 x 50	(991 x 1,270)
26 x 36	(660 x 914)	39¾ x 54	(1,010 x 1,372)
28½ x 48	(723 x 1,219)	40 x 48	(1,016 x 1,219)
28½ x 49½	(723 x 1,257)	40¾ x 55	(1,035 x 1,397)
30 x 42	(762 x 1,066)	41 x 54	(1,041 x 1,372)
30 x 44	(762 x 1,118)	42 x 48	(1,066 x 1,219)
30 x 54	(762 x 1,371)	42 x 58	(1,066 x 1,473)
30¼ x 36¼	(768 x 920)	42 x 56	(1,066 x 1,422)
31 x 45	(787 x 1,143)	42 x 64	(1,066 x 1,625)
31½ x 48	(800 x 1,219)	42½ x 55	(1,079 x 1,397)
32 x 42	812 x 1,066)	42½ x 59⅞	(, 080 x 1,521)
32 x 44	812 x 1,118)	43 x 58	(1,092 x 1,473)
32 x 52	(812 x 1,320)	43 x 60	(1,072 x 1,524)
34 x 44	(863 x 1,118)	44 x 54	(1,118 x 1,372)
34 x 56	(864 x 1,422)	44 x 58	(1,118 x 1,473)
34½ x 44½	(876 x 1,130)	44 x 64	(1,118 x 1,625)
35 x 45	(889 x 1,143)	45 x 60	(1,143 x 1,524)
35 x 46	(889 x 1,168)		

METRIC CONVERSIONS

Multiply inches by 25.4 to convert to millimeters (mm). Multiply pounds by .453 592 to convert to kilograms (kg).

Divide millimeters (mm) by 25.4 to convert to inches. Divide kilograms (kg) by .453 592 37 to convert to pounds.

To convert from basis weight to grams per square meter ($g/m^{2)}$ multiply basis weight by 1406.5 and divide by the number of square inches in base sheet. Simple conversion weight in pounds divided by 2.20462 = Weight in kilograms of 1,000 sheets.

PROPERTY NUMBERS

Property No.	Page No.
13-2	6
14-1	6
15-9	6
46-9	6
74-4	6
145-7	8
149-0	8
284-4	9
299-2	9
313-1	9
333-6	9
347-6	9
372-7	9
414-6	14
548-7	5
579-7	10
585-1	10
602-5	10
603-3	10
617-3	10
683-1	11
686-6	11
724-2	12
790-1	12
890-7	14
903-2	13
911-3	13
918-1	13
919-9	13
923-7	13
927-0	19
929-6	13
930-0	13
931-8	13
932-6	13
939-3	13
941-5	13
963-6	13
1007-3	18
1014-6	18
1055-3	18
1087-1	15
1092-8	15
1105-3	15
1140-1	15
1166-5	14
1168-1	14
1173-8	15
1181-9	14
1256-4	15
1294-7	16
1302-1	16
1310-2	16
1313-7	16
1315-3	16
1317-0	16
1319-6	16
1321-8	16
1335-8	16
1337-4	16
1338-2	16
1340-4	16
1343-9	16
1352-8	16
1360-9	16
1362-5	16
1379-0	16
1381-1	16
1391-9	16
1395-1	16
1945-3	14
2108-3	19
2559-3	8
2709-0	15
2777-4	19
3013-9	15
3019-8	15
3054-6	15
3805-9	6
3839-3	6
4029-1	16
4045-2	16
4293-5	16
4355-9	9
4429-6	16
5025-3	11
5027-0	11
5029-6	11
5030-0	11
5031-8	11
5033-4	11
5043-1	12
5142-0	12
5455-1	5
5457-7	5
5458-5	5
5543-3	5
5559-0	5
5539-5	5
5590-5	5
5601-4	5
5604-9	5
5626-0	5
5600-6	5
5639-1	5
5693-6	5
5700-2	5
5792-4	19
5800-9	19
5902-1	8
5957-9	5
6980-9	13
6981-7	13
6982-5	13
6983-3	13
6984-1	13
6985-0	13
6986-8	13
7096-3	12
7104-8	12
7116-1	12
7126-9	12
7130-7	12
7132-3	12
7344-0	5
7347-4	5
7348-2	5
7806-9	10
8896-0	6
9092-1	18
9093-0	18
9095-6	18
9096-4	18
9099-9	18
9100-6	18
9101-4	18
9104-9	18
9111-1	18
9118-9	18
9119-7	18
9120-1	18
9238-0	19
9599-1	18
9613-0	19
9762-4	19
10101-0	7
10110-9	7
10250-4	7
11232-1	7
11251-8	7
11259-3	7
12234-3	7
12250-5	7
12388-9	8
12547-4	8
12560-1	8
12561-0	8
12562-8	8
12564-4	8
12565-2	8
12753-1	8
12754-0	8
12755-8	8
12758-2	8
12809-1	8
13402-3	8
13719-7	7
15754-6	7
15782-1	8
15788-1	8

Table Showing the Number of Pieces That Can Be Cut From Full Size Sheet (Prime Stock)

Size of Cut Sheet											
	8x10½	**8x7**	**8x5**	**8x11½**	**8½x11**	**8½x14**	**9x12**	**5x3**	**6x4**	**11x17**	**17x22**
Prime Stock Size											
22 x 34	8	12	16	6	**8**	4	5	48	30	**4**	2
23 x 35	8	14	19	6	8	6	6	51	29	4	2
24 x 36	9	15	21	7	8	6	**8**	56	**36**	4	2
25¼ x 38	10	15	23	9	8	6	8	63	38	4	2
27 x 36	10	15	22	8	9	6	9	64	39	4	2
25 x 40	11	20	26	10	10	9	9	89	48	5	2
30 x 29	11	19	27	10	10	8	10	**78**	47	5	2
31 x 45	14	23	33	11	14	10	12	**93**	55	6	2
34 x 44	16	24	35	13	**16**	12	11	96	62	**8**	**4**
34 x 56	21	32	47	18	20	16	**16**	124	79	10	4
35 x 45	17	27	39	13	16	12	13	105	62	8	4
36 x 40	15	25	35	13	14	10	13	98	**60**	7	4
36 x 46	17	28	40	14	16	12	15	108	**69**	8	4
36 x 48	19	30	42	15	17	12	**16**	115	**72**	8	4
36 x 56	21	**36**	49	18	20	16	18	134	**84**	10	4
38 x 48	20	30	45	18	17	14	16	121	**76**	8	4
38 x 50	21	33	46	18	18	14	16	126	76	9	4
38 x 53	22	33	49	19	20	15	17	133	82	9	4
39 x 50	21	34	46	18	18	14	16	**130**	76	9	4
40 x 48	22	30	**48**	18	18	13	17	**128**	**80**	9	4
42 x 48	**24**	**36**	48	19	19	16	18	134	**84**	8	4
42½ x 55	26	41	55	21	**25**	18	20	154	94	11	5

Bold figures show the most economical full sheet size indicated under each heading, for example: 650,000 sheets, 5 x 3 inches, substance 110, White Index, are required. On page 12 or this catalogue, under Index Paper, White, two sizes of prime stock are listed for substance 110. The above table shows size 39 x 50 inches, 130 cut sheets, 5 x 3 inches without waste. This size (39 x 50) is the most economical of the two prime sizes listed in the catalogue for substance 110, White Index. The most economical "cuts" out of each full sheet does not take into consideration the "grain".

Additional Charges for Variations in Size and Quantity

Cut Size	Number Wrapped	Paper	Card
Add to cut and wrap rates (8½x 11 x 17) Per 1,000 cut pieces:			
Less than 2 by 3……..	1,000……		
2 by 3 to less than 3 by 3…….	1,000……		
3 by 3 to less than 3 by 5…….	1,000……		
3 by 5 to less than 4 by 6…….	1,000……		
4 by 6 to less than 5¼ by 8…….	1,000……		
5¼ by 8 to less than 8½ by 11	1,000……		
Any size up to 11 x 17 (Per package)…….	Less than 1,000……		
Over 11 x 17-Add to cut and wrap rates (Over 11 x 17 to 19 x 24 inches) per package……	Less than 500……		
Add to original package price per 1,000 Full sheets-On skids not wrapped:[3]			
Over 8½ x 11 to 11 x 17.....	……..		
Over 11 x 17 to 17 x 22……..	……..		
Over 17 x 22 to 21 x 34……..	……..		
Full sheets over 21 x 32 Trimmed on two sides…….	……..		
Full sheets, any size, Re-skidded for insertion Of furnished pallet[2]……..	……..		
Add to original package price for cutting and banding in packages up to 11 x 17 (per banded package)……..	Less than 500……		
Add to original package price for cutting And banding in packages up to 11 x 17 and wrapped in larger packages (Per banded package)……	Less than 500……		
Add per 1,000 cut pieces:			
Gummed stock over 8½ x 11……	1,000……..		
Plyboard, 4-Ply over 3 x 11[3]	1,000……..		
Plyboard, 8-Ply over 8½ x 11[3]	1,000……..		
Plyboard, 14-Ply over 8½ x 11[3]……	1,000……..		

[1] These prices are in addition to original package prices and are based on 5,000 or more sheets of card stock and 10,000 or more sheets of paper.

[2] Minimum charge of $9.85 for re-skidding on pallet.

[3] Rates for plyboard are based on hand wrapping. Four plyboards are wrapped in 250's and 8 to 14-ply boards Are wrapped in 100's.
A minimum of $31.85 is charged for cutting and skidding each item.
An additional charge will be made for wrapping or boxing full size sheets.
An additional charge will be made for banding.
An additional charge of $16.90 per skid will be made for wrapping skids in waterproof paper.

INDEX

	Page No.
Additional Changes……	25
Boards……	15
Bond paper……	10
Book paper……	6-8
Card, Strathmore Fairfield, White……	19
Cartons.....	18,19
Cover paper.....	13,14,19
Embossing bond stationery, 100%.....	19
Envelopes.....	16-17
Index paper.....	12
Kraft wrapping paper.....	18
Laser paper.....	5
Laws & Regulations.....	3
Ledger paper.....	11
Metric Table.....	22
Micrometer readings.....	21
Minimum Content Standards for recycled paper.....	20
Newsprint.....	6
Parchment, Artificial, 100% (Enrolled Bills).....	14
Parchment Deed, 100%.....	14
Parchment, Imitation, 100%.....	14
Passport paper, 50%.....	19
Postal Card, U.S…	14
Property numbers listed numerically.....	23
Recycled paper notice.....	20
Restricted items.....	19
Table on Cut Sheets.....	24
Writing paper.....	9
Writing paper, Fine, 100%.....	14
Xerographic paper.....	5

Notes