U.S. GOVERNMENT PUBLISHING OFFICE
200 N. LaSalle St., Suite 810
Chicago, IL 60601-1055

GENERAL TERMS, CONDITIONS, AND SPECIFICATIONS

For the Procurement of

Certificate Overprinting

as requisitioned from the U.S. Government Publishing Office (GPO) by the

Department of the Army
Army Headquarters Services, Army Publishing Directorate
Fort Belvoir, VA

Single Award

BID OPENING: Bids shall be publicly opened at **2 p.m.** prevailing Chicago, IL time on

October 3, 2019

BID SUBMISSION: Send bids to U.S. Government Publishing Office, 200 N. LaSalle St., Suite 810, Chicago, IL 60601, or fax bids to **312-886-2057**.

CONTRACT TERM: The term of this contract is for the period beginning November 1, 2019 and ending October 31, 2020, plus up to 4 optional 12-month extension period(s) that may be added in accordance with the "Option to Extend the Contract Term" clause in this contract.

PRODUCTION AREA: It is assumed that all production facilities used in the manufacture of the product(s) ordered under this contract will be located within a 75-mile radius of St. Louis, MO city limits.

Any bidder intending to use production facilities outside this area should furnish information, with the bid, which will on its face demonstrate ability to meet the schedule requirements. The determination by the Government of the acceptability of this information in no way relieves the successful bidder of the responsibility for compliance with these schedule requirements.

Note: Minor changes from the previous solicitation are scattered throughout.

The GPO 910 "BID" Form is no longer required. Bidders are to fill out, sign/initial, as applicable, all pages of SECTION 4. – SCHEDULE OF PRICES.

INFORMATION: For questions about these specifications contact Felicia McGurren at 312-353-3916 x3 or fmcgurren@gpo.gov. Questions about these specifications should be forwarded at least 5 workdays before the Bid Deadline, in order to be addressed prior to bid submission.

Previous abstract information is available on the GPO website at:
https://www.gpo.gov/how-to-work-with-us/vendors/contract-pricing or email fmcgurren@gpo.gov.

Fax requests for new award information (available approximately 2 weeks after bid opening) to GPO Chicago Front Desk at 312-886-2057.

SECTION l.- GENERAL TERMS AND CONDITIONS

GPO CONTRACT TERMS: Any contract which results from this Invitation for Bid will be subject to the applicable provisions, clauses, and supplemental specifications of GPO Contract Terms (GPO Publication 310.2, effective December 1, 1987 (Rev. 01/18) and GPO Contract Terms, Quality Assurance Through Attributes Program for Printing and Binding (GPO Publication 310.1, effective May 1979 (revised August 2002).

Contract Terms, Forms and Standards information for contractors can be found on the GPO website at http://www.gpo.gov/how-to-work-with-us/vendors/programs-for-vendors. The GPO Contract Terms publications noted above can be downloaded at https://www.gpo.gov/docs/default-source/forms-and-standards-files-for-vendors/contractterms2018.pdf and http://www.gpo.gov/docs/default-source/forms-and-standards-files-for-vendors/qatap.pdf.

DOING BUSINESS WITH GPO: Contractors wishing to do business with the GPO are referred to the GPO web site http://www.gpo.gov/how-to-work-with-us/vendors/programs-for-vendors, where one can register as a GPO contractor using the **'GPO Contractor Connection'** link in accordance with the furnished instructions on this page.

NOTE: Prospective and existing GPO contractors are to note that as of January 1, 2008, all contractors seeking to do business with GPO must first complete and thereafter maintain the accuracy of their GPO Contractor Connection registration with the following mandatory taxpayer information boxes: "EIN/TIN #" Employer Identification Number of Taxpayer Identification Number): "Subject to Backup Withholding" (See IRS Form W-9, available for download at http://www.irs.gov/pub/irs-pdf/fw9.pdf.) GPO will withhold payment of invoices for work completed by any contractor who fails to provide this tax data in GPO Contractor Connection. Such invoices will be declared ineligible for payment until all requirements for payment, including providing this tax data in GPO Contractor Connection, have been satisfied.

QUALITY ASSURANCE LEVELS AND STANDARDS: The following levels and standards shall apply to these specifications:

Product Quality Levels:
(a) Printing Attributes – Level III.
(b) Finishing Attributes – Level III.

Inspection Levels (from ANSI/ASQC Z1.4):
(a) Non-destructive Tests - General Inspection Level I.
(b) Destructive Tests - Special Inspection Level S-2.

Specified Standards: The specified standards for the attributes requiring them shall be:

Attribute: Specified Standard

P-7. Type Quality and Uniformity: Camera Copy, Average Type Dimension
P-9. Solid and Screen Tint Color Match: Pantone Matching System

SUBCONTRACTING: Subcontracting will not be permitted. Bidders who must subcontract these operations will be declared not responsible.

PREAWARD SURVEY: In order to determine the responsibility of the prime contractor or any subcontractor, the Government reserves the right to conduct an on-site preaward survey at the contractor's/subcontractor's facility or to require other evidence of technical, production, managerial, financial, and similar abilities to perform, prior to the award of a contract. As part of the financial determination, the contractor in line for award may be required to provide one or more of the following financial documents:

1) Most recent profit and loss statement
2) Most recent Balance Sheet
3) Statement of cash flows
4) Current official bank statement
5) Current lines of credit (with amounts available)
6) Letter of commitment from paper supplier(s)
7) Letter of commitment from any subcontractor

The documents will be reviewed to validate that adequate financial resources are available to perform the contract requirements. Documents submitted will be kept confidential and used only for the determination of responsibility by the Government. Failure to provide the requested information in the time specified by the Government may result in the Contracting Officer not having adequate information to reach an affirmative determination of responsibility.

OPTION TO EXTEND THE CONTRACT TERM: The Government has the option to extend the term of this contract for a period of 12 months by written notice to the contractor not later than 30 days before the contract expires. If the Government exercises this option, the extended contract shall be considered to include this clause, except, the total duration of the contract may not exceed 5 years as a result of, and including, any extension(s) added under this clause. Further extension may be negotiated under the "Extension of Contract Term" clause. See also "Economic Price Adjustment" for periodic pricing revision.

EXTENSION OF CONTRACT TERM: At the request of the Government, the term of any contract resulting from this solicitation may be extended for such period of time as may be mutually agreeable to the GPO and the contractor.

ECONOMIC PRICE ADJUSTMENT: The pricing under this contract shall be adjusted in accordance with this clause, provided that in no event will any pricing adjustment be made that would exceed the maximum permissible under any law in effect at the time of the adjustment. There will be no adjustment for orders placed during the first period specified below. Pricing will thereafter be eligible for adjustment during the second and any succeeding performance period(s). For each performance period after the first, a percentage figure will be calculated as described below and that figure will be the economic price adjustment for that entire next period. Pricing adjustments under this clause are not applicable to reimbursable postage or transportation costs, or to paper, if paper prices are subject to adjustment by separate clause elsewhere in this contract.

For the purpose of this clause, performance under this contract will be divided into successive periods. The first period will extend from November 1, 2019 to October 31, 2020, and the second and any succeeding period(s) will extend for 12 months from the end of the last preceding period, except that the length of the final period may vary. The first day of the second and any succeeding period(s) will be the effective date of the economic price adjustment for that period.

Pricing adjustments in accordance with this clause will be based on changes in the seasonally adjusted "Consumer Price Index For All Urban Consumers - Commodities Less Food" (Index) published monthly in the CPI Detailed Report by the U.S. Department of Labor, Bureau of Labor Statistics.

The economic price adjustment will be the percentage difference between Index averages as specified in this paragraph. An index called the variable index will be calculated by averaging the monthly Indexes from the 12-month interval ending three (3) months prior to the beginning of the period being considered for adjustment. This average is then compared to the average of the monthly Indexes for the 12-month interval ending (August 1, 2019), called the base index. The percentage change (plus or minus) of the variable index from the base index will be the economic price adjustment for the period being considered for adjustment.

The Government will notify the contractor by contract modification specifying the percentage increase or decrease to be applied to invoices for orders placed during the period indicated. The contractor shall apply the percentage increase or decrease against the total price of the invoice less reimbursable postage or transportation costs and separately adjusted paper prices. Payment discounts shall be applied after the invoice price is adjusted.

If the Government exercises an option, the extended contract shall be considered to include this economic price adjustment clause.

ASSIGNMENT OF JACKETS, PURCHASE AND PRINT ORDERS: A GPO jacket number will be assigned and a purchase order issued to the contractor to cover work performed. The purchase order will be supplemented by an individual "print order" for each job placed with the contractor. Print order, when issued, will indicate the quantity to be produced and any other information pertinent to the particular order.

ORDERING: Items to be furnished under the contract shall be ordered by the issuance of print orders by the Government Orders may be issued under the contract from November 1, 2019 through October 31, 2020 plus for such additional period(s) as the contract is extended. All print orders issued hereunder are subject to the terms and conditions of the contract. The contract shall control in the event of conflict with any print order. A print order shall be "issued" for purposes of the contract, when it is either deposited in the U.S. Postal Service mail or otherwise furnished to the contractor in conformance with the schedule.

CLASSIFICATION AND SECURITY REQUIREMENTS: Certificates furnished under these specifications are classified as "controlled items/accountable forms". The contractor shall maintain in operation, an effective security system where any of the items covered by these specifications are manufactured and/or stored (awaiting distribution) to assure against theft and/or the product ordered falling into unauthorized hands.

The contractor shall insure that the following steps are taken:
(1) Only contractor's authorized personnel are permitted to work on the materials.
(2) Release of materials to anyone not authorized by GPO is prohibited.
(3) All copies of the certificates including all waste and unused certificates must be identified and returned with delivery of order.
(4) All letterpress cuts of signatures must be stored in a locked drawer or cabinet when not in use.

During the Preaward Survey, the contractor must submit a production plan for fulfilling these requirements.

REQUIREMENTS: This is a requirements contract for the items and for the period specified herein. Shipment/delivery of items or performance of work shall be made only as authorized by orders issued in accordance with the clause entitled "Ordering". The quantities of items specified herein are estimates only, and are not purchased hereby. Except as may be otherwise provided in this contract, if the Government's requirements for the items set forth herein do not result in orders in the amounts or quantities described as "estimated", it shall not constitute the basis for an equitable price adjustment under this contract.

Except as otherwise provided in this contract, the Government shall order from the contractor all the items set forth which are required to be purchased by the Government agency identified on page 1.

The Government shall not be required to purchase from the contractor, requirements in excess of the limit on total orders under this contract, if any.

Orders issued during the effective period of this contract and not completed within that time shall be completed by the contractor within the time specified in the order, and the rights and obligations of the contractor and the Government respecting those orders shall be governed by the terms of this contract to the same extent as if completed during the effective period of this contract.

If shipment/delivery of any quantity of an item covered by the contract is required by reason of urgency prior to the earliest date that shipment/delivery may be specified under this contract, and if the contractor will not accept an order providing for the accelerated shipment/delivery, the Government may procure this requirement from another source.

The Government may issue orders which provide for shipment/delivery to, or performance at, multiple destinations. Subject to any limitations elsewhere in this contract, the contractor shall furnish to the Government all items set forth herein which are called for by print orders issued in accordance with the "Ordering" clause of this contract.

OPTIONS: Whenever an option is indicated in the specifications, it is the Government's option, not the contractor's, unless it is specifically stated otherwise.

PAYMENT: Submit invoices for payment via the GPO fax gateway (if no samples are required) utilizing the GPO barcode coversheet program application is the most efficient method of invoicing. Instruction for using this method can be found at the following web address:
http://winapps.access.gpo.gov/fms/vouchers/barcode/instructions.html

Invoices may also be mailed to: U.S. Government Publishing Office, Office of Financial Management, Attn: Comptroller, Stop: FMCE, Washington, DC 20401.

For more information about the billing process refer to the General Information of the Office of Finance web page located at https://www.gpo.gov/how-to-work-with-us/vendors/how-to-get-paid.

Agency Invoice Courtesy Copy: Contractor is required to furnish a copy of the invoice voucher for each GPO Form 2511 Print Order, including full shipping and postage details, to all of the agency points of contact below, and cc to fmcgurren@gpo.gov, in addition to submitting the invoice voucher to the GPO FMCE fax number.

Teri "Dawn" Wood
Printing Management Specialist
Print Management Division
Army Publishing Directorate
Army Headquarters Services
9301 Chapek Rd., Bldg. 1458, 1NE4313
Fort Belvoir, VA 22060-5447
teri.d.wood.civ@mail.mil
PH: 703-545-6641

RECEIPTS FOR DELIVERY: Contractor must furnish their own receipts for delivery. These receipts must include the GPO jacket, program and print order numbers, total quantity shipped and/or delivered, number of cartons and quantity per carton; date delivery made; and signature of the Government agent accepting delivery. Original copy of these receipts or other acceptable proof must accompany the contractor's voucher for payment.

CONTRACTOR'S INVOICE FOR PAYMENT MUST BE ITEMIZED IN ACCORDANCE WITH THE SCHEDULE OF PRICES. FAILURE TO ITEMIZE IN ACCORDANCE WITH THE SCHEDULE OF PRICES MAY RESULT IN DELAYED PAYMENT.

SECTION 2.- SPECIFICATIONS

SCOPE: These specifications cover the pickup, letterpress overprinting, packing and delivery of preprinted certificates.

TITLE: Certificate Overprinting.

Although this is an option year contract, all the estimates, averages, etc. are based upon one year's production.

FREQUENCY OF ORDERS: Approximately 28 orders per year. It is anticipated that multiple orders will frequently be placed at the same time. The maximum number of orders placed per day will be 10, but more common will be 1 to 4 orders placed on the same day. When more than one order is placed on the same day, no single order will require more than 10,000 copies to be overprinted.

QUANTITIES: Approximately 200 to 50,000 certificates per order. It is anticipated that 25% of the orders will be for 200 to 1,000 certificates, 50% of the orders will be for 1,001 to 10,000 certificates, and 25% of the orders will be for 10,001 to 50,000 certificates. An occasional order may exceed approximately 50,000 certificates up to 100,000 certificates.

GOVERNMENT TO FURNISH:

Certificates for Overprinting: Pre-printed certificates will be available at the MDD Warehouse in St. Louis for pick-up by the contractor, at contractor's expense.

Furnished pre-printed certificates will range in size from 10 x 8 inches to 11 x 14 inches, and will be on paper stock 80-lb. Smooth Cream Paper (JCP Code L21). Some certificates will have been foil stamped. Certificates will be furnished packed in containers, some of which will have inner shrink film wrapped packages of 100. When sixteen or more shipping containers are furnished at the same time, containers will be stacked on pallets.

Type high engravings of required signatures and titles will be furnished. Contractor must hold reproducibles for reuse during the timeframe of the contract. Reproducibles shall be returned to the Agency upon the expiration date of the contract, or sooner if requested.

Print Order (GPO Form 2511): Print orders will be provided via email or included with the shipped certificates package. At the Government's option, print orders may be furnished as a hard copy, a faxed copy, or uploaded to contractor's FTP site. Contractor must be able to accept via email.

The agency furnished APD Form 128 Label must be applied to all carton materials delivering to the MDD Warehouse at the close of each order. See "Attachment B".

Identification markings such as register marks, ring folios, rubber stamped jacket numbers, commercial identification marks of any kind, etc., except GPO imprint, form number, and revision date, carried on copy or film, must not print on finished product.

CONTRACTOR TO FURNISH: All materials and operations, other than those listed under "Government to Furnish," necessary to produce the product(s) in accordance with these specifications.

The timeline for these orders is sensitive. It is anticipated that if the contractor is not using their own vehicle for pickup and delivery, that overnight shipping will be necessary in order to meet the schedule. Use of 2-day, ground shipping or similar, may jeopardize the schedule. Contractor's production plan presented during the Preaward Survey for shipping using subcontracted services must fully and reasonably support this option.

Contractor is responsible for timely pickup and delivery of all orders from and to the MMD Warehouse in St. Louis, MO. If not using a contractor-owned vehicle, the contractor must furnish all shipping label materials and any related items and/or instructions in a timely manner to the agency during the life of the contract.

EXAMINATION OF FURNISHED MATERIAL: Contractor must immediately upon receipt perform an examination of all furnished materials, and notify the agency Point of Contact immediately of any issues, damage, missing materials or other concerns. Additional charges or extensions in schedule will not be allowed due to contractor's failure to thoroughly examine furnished material in a timely manner.

LETTERPRESS PRINTING: Print certificates one side only in one color – blue or black ink. Approximately 90% of certificates will be overprinted with one person's signature and title line, the balance will be overprinted with two signatures and two title lines. Approximately 95% of orders print in Pantone 288 blue ink, with the remaining orders printing in black.

PACKING: Shrink film wrap overprinted certificates in packages of 100. At contractor's option, certificates may be repacked in the shipping containers that the certificates were originally packed in when picked up from the warehouse, or may be packed in new containers. Shipments received on pallets are to be returned on pallets.

Packing List: Each shipment shall contain a packing list showing the following data:

(1) Name and address of consignor;
(2) Name and address of consignee;
(3) Requisition, program, print order, and GPO jacket numbers;
(4) Bill of lading number, if any;
(5) Description of the material shipped, including--
  (a) Publication number and title, if applicable, and date;
  (b) Quantity per container and total quantity;
  (c) Total number of containers;
  (d) Total number of pallets.

Each packing list must be sealed in a waterproof envelope, secured to the outside of the container on the upper left front of the pallet, and in the case of truckload shipments be placed near the tailgate of the trailer.

LABELING AND MARKING:

See "Attachment A": "MDD PACKING, LABELING, PALLETIZING REQUIREMENTS GUIDE" for full pallet and carton instructions.

See "Attachment B" – APD Form 128 Label must be used for all materials delivering to the MMD Warehouse in St. Louis. Fill in as suitable and affix over top of the labels on the original cartons as received from the agency, or affix to new cartons.

DISTRIBUTION: F.O.B. Destination.

Deliver each order as a single complete shipment. No partial deliveries are permitted.

Deliver to:

DOL-W-MDD, 1655 Woodson Road, St. Louis, MO 63114-6128.

Deliveries must be made on workdays between the hours of 8 a.m. and 2 p.m., local time.

GPO "VERIFICATION OF DELIVERY": Contractor MUST email delivery verification information to VerifyChicago@gpo.gov WITHIN 24 HOURS OF DELIVERY. Enter Program and Print Order number in the subject line, and in the body of the message indicate the method of shipment and for the **F.O.B. Destination** (at contractor's expense), enter the date of delivery. If a contract specifies a combination of both methods, include all shipping and delivery dates. **Failure to provide this information for each print order may result in delayed payment of invoices.**

SCHEDULE:

Adherence to this schedule must be maintained. Contractor must not start production of any job prior to receipt of the individual print order (GPO Form 2511).

No definite schedule for pickup of material can be predetermined. No additional time will be allowed for multiple orders placed at the same time or whose schedules overlap.

Furnished material (certificates for overprinting) must be picked up from and delivered to the MDD Warehouse, at the St. Louis address listed under "DISTRIBUTION". Contractor is cautioned that no power truck or hand truck will be available for pickup or delivery at the loading dock.

Due to required quick turnaround, contractor is cautioned that timely and reliable transport is necessary. During the Preaward survey, contractor will be required to provide a production plan that demonstrates the ability to successfully meet this requirement throughout the life of the contract.

The following schedule begins the workday after notification of the availability of print order and furnished material; the workday after notification will be the first workday of the schedule.

Deliver any order up to 500 certificates in 5 workdays.

Deliver any order from 501 to 5,000 certificates in 8 workdays.

Deliver any order from 5,001 to 10,000 certificates in 10 workdays.

Deliver any order from 10,001 to 50,000 certificates in 15 workdays.

Four additional workdays will be allowed on each print order, for each additional 50,000 certificates, or portion thereof.

For example, if a contractor is notified that an order is ready for production on Monday, December 2, 2019, for 2,000 certificates to be overprinted, contractor must pickup, overprint, package and deliver the order complete to the MDD Warehouse on or before December 12, 2019.

Unscheduled material such as shipping documents, receipts or instructions, delivery lists, labels, etc., will be furnished with each order or shortly thereafter. In the event such information is not received in due time, the contractor will not be relieved of any responsibility in meeting the shipping schedule because of failure to request such information.

RETURN OF FURNISHED MATERIAL: Upon termination of this contract, or upon request, any furnished materials (including letterpress cuts of signatures and titles) remaining in the contractor's plant must be returned to Steve Johnson, Chief, Printing Management Division in Virginia by a means requiring a signed receipt.

All expenses incidental to the pickup and return of furnished materials must be borne by the contractor.

SECTION 3.- DETERMINATION OF AWARD

The Government will determine the lowest bid by applying the prices offered in the "Schedule of Prices" to the following units of production which are the estimated requirements to produce 1 year's requirements under this contract. These units do not constitute, nor are they to be construed as, a guarantee of the volume of work which may be ordered for a like period of time. The following item designations correspond to those listed in the "Schedule of Prices".

		(1)	(2)
I.	(a)	28	3,866

SECTION 4.- SCHEDULE OF PRICES

Bids offered are F.O.B. Destination.

Bidder must make an entry in each of the spaces provided. Bids submitted with any obliteration, revision, or alteration of the order and manner of submitting bids, may be declared nonresponsive.

An entry of NC (No Charge) shall be entered if bidder intends to furnish individual items at no charge to the Government.

Bids submitted with NB (No Bid) or blank spaces for an item may be declared nonresponsive.

The Contracting Officer reserves the right to reject any offer that contains prices for individual items of production (whether or not such items are included in the Determination of Award) that are inconsistent or unrealistic in regard to other prices in the same offer or to GPO prices for the same operation if such action would be in the best interest of the Government.

The contractor is cautioned not to perform any operation(s) or produce any product(s) for which a price has not been offered under the contract. Further, the contractor is not to accept print orders which are outside the scope of the contract. Any changes made to the print order MUST be confirmed in writing by the Contracting Officer, Chicago GPO. If such orders are placed by the agency, and no Modification is received from the Chicago GPO, the contractor is to notify GPO Chicago immediately. Failure to do so may result in nonpayment.

CONTRACTOR MUST INVOICE IN ACCORDANCE WITH SCHEDULE OF PRICES. FAILURE TO ITEMIZE IN ACCORDANCE WITH THE SCHEDULE OF PRICES MAY RESULT IN DELAYED PAYMENT.

All billing submitted to the GPO shall be based on the most economical method of production.

Fractional parts of 100 will be prorated at the Per 100 rate.

I. COMPLETE PRODUCT: Prices offered shall include the cost of all required materials and operations necessary for the complete production and distribution of the product listed in accordance with these specifications.

	Makeready and/or Setup (1)	Running Per 100 Copies (2)
(a) Per one-color certificate..... per order	$ _____	$__ _____

_____
(Initials)

(COMPLETE AND SUBMIT THIS PAGE WITH YOUR BID)

My production facilities are located within the Assumed Area of Production _____yes _____no

NOTICE: Bidders OUTSIDE the assumed production area specified on page one of these specifications should complete the following information.

1. Proposed carrier(s) for pickup of Government Furnished Material..... _____

   a. Number of hours from acceptance of print order to pickup of Government Furnished Material ..... _____

   b. Number of hours from pickup of Government Furnished Material to delivery at contractor's plant ..... _____

2. Proposed carrier(s) for delivery of completed product ....._____

   a. Number of hours from notification to carrier to pickup of completed product._____

   b. Number of hours from pickup of completed product to delivery at destination _____

_____
(Initials)

(COMPLETE AND SUBMIT THIS PAGE WITH YOUR BID)

SHIPMENT(S): Shipments will be made from: City ___________________________, State ___________

DISCOUNTS: Discounts are offered for payment as follows: __________ Percent, _________calendar days. See Article 12 "Discounts" of Solicitation Provisions in GPO Contract Terms (Publication 310.2).

AMENDMENT(S): Bidder hereby acknowledges amendment(s) number(ed) _________________________

BID ACCEPTANCE PERIOD: In compliance with the above, the undersigned agree, if this bid is accepted within_____________ calendar days (60 calendar days unless a different period is inserted by the bidder) from the date for receipt of bids, to furnish the specified items at the price set opposite each item, delivered at the designated points(s), in exact accordance with specifications.

NOTE: Failure to provide a 60-day bid acceptance period may result in expiration of the bid prior to award.

CONTRACTOR'S NAME AND SIGNATURE: Fill out and return one copy of all pages in "Section 4. - Schedule of Prices," initial or sign each in the space provided. Additionally, see Page 1.

Contractor ____

____

(Street Address) (City – State – Zip)

By ____

(Signature and title of person authorized to sign this bid) (Date)

____

(Person to be Contacted) (Telephone Number)

____

(Email Address) (Contractor's Code No.)

COMPLETE AND SUBMIT THIS PAGE WITH YOUR BID

- -

THIS SECTION FOR GPO USE ONLY

Certified by: ______________ Date: ___________ Contracting Officer: ___________ Date: ______________

- -

Attachment A:

MDD PACKING, LABELING, PALLETIZING REQUIREMENTS GUIDE

PACKING

The method of packing must be accomplished in accordance with the following interpretations. The method and manner of packaging for preservation and required storage and/or transportation shall be in accordance with either the National Motor Freight Classification (NMFC) or the Uniform Freight Classification (UFC) tariff. The material used in packing must be of such quality as to insure arrival of the printed matter at its destination in a satisfactory and usable condition. Each packing unit must be uniform in size and quantity contained therein. Unless otherwise indicated, each shipping container must not exceed 45 pounds when fully packed. Quantities which fill less than one-half a shipping container may be wrapped in shipping bundles.

(a) *Numbered products*. Numbered products must be packaged in numerical sequence. Inner packages must be placed in shipping containers and shipping containers placed on pallets or skids (if pallets or skids are used) in numerical sequence. The low numbers must be on top unless otherwise ordered. The label(s) placed on each package and shipping bundle or container must also carry the first and last number contained therein.

(b) *Kraft paper wrapping*. Wrap in packages not to exceed 10" in height or in quantities as ordered. Place a piece of lightweight chipboard or newsboard, cut to the same size as the printed work, on top and bottom of the printed work, tight- wrap with kraft paper, and seal.

(c) *Shrink-film wrapping*. Wrap in packages not to exceed 10" in height or in quantities as ordered. Place a piece of lightweight chipboard or newsboard, cut to the same size as the printed work, on the bottom of the printed work, and wrap with heat-shrink film of suitable thickness and quality. The label may be placed inside the wrap, on the top or on the end.

(d) *Boxing*. Solid pack in suitable paperboard boxes, which have closely fitted sides and ends. Tops and bottoms must be securely fastened.

(e) *Tying*. Tie in packages not to exceed 10" in height, or in quantities as ordered. Place a piece of light- weight chipboard or newsboard, cut to the same size as the printed work, on top and bottom of the printed work, and tie in one position around both the length and width with substantial cord or twine. The cord or twine must be wrapped at least twice in each direction.

(f) *Banding*. Band with a strip of heavy kraft paper, not less than 2" in width, around the short dimension of the form. The ends of the band must overlap and be held together with a suitable adhesive or gummed tape.

(g) *Kraft paper wrapping and tying*. Prepare as indicated under paragraph (b) except tying shall be substituted for sealing.

(h) *Shipping bundles*. The contents of bundles shall first be protected by using a good grade of corrugated mailing board on all sides and ends, then wrapped in 2 or more layers of heavy kraft paper and tied in both directions with heavy twine or rope.

(i) *Individual mailing containers*. Containers may be ordered plain or printed with title and stock number in 18 point caps on the spine, in black ink, positioned so sealing tape will not cover the type. All containers must be packed solidly; in the event the product does not fit snugly, open-cell pads or thicknesses of corrugated board must be added to prevent shifting during transit.

(1) For domestic use: Containers are to be one- piece, made of "B" fluted material and have a minimum bursting strength of 200 pounds per square inch or a minimum edge crush test (ECT) of 32 pounds per inch width. Folders (containers with open corners) may not be used when the thickness of the contents exceeds 2". When the thickness of the contents exceeds 2", containers with closed corners such as mailers or regular slotted cartons (RSC) must be used. Containers must be packed and sealed in a manner that will insure acceptance and safe delivery by the U.S. Postal Service.

(2) For overseas use: Containers are to be one- piece, made of "B" fluted material and have a minimum bursting strength of 275 pounds per square inch or a minimum ECT of 44 pounds per inch width. A flap at one end of the container must not be fastened in order that postal inspection may be accomplished in accordance with international postal regulations. This tuck-in flap must be of sufficient length to hold the product securely, without danger of opening, but permit ready opening and reclosing without damage to the product or the container. Containers must be formed, packed, and sealed (with the exception of one flap) in a manner that will assure acceptance and safe delivery by the carrier. Each container must be marked as to the contents therein. Folders (containers with open corners) are not acceptable for mailing to overseas destinations.

(j) *Shipping containers*. Only new corrugated or solid fiberboard containers may be used. Containers must be made in accordance with ASTM D5118 and any amendments thereto. Unless otherwise provided in the specifications, containers shall have a minimum bursting strength of 275 pounds per square inch or a minimum ECT of 44 pounds per inch width. Containers must be packed solidly (top and sides) with material laid flat on the bottom of the containers (never stand on end); top and bottom pads of corrugated fiberboard shall be used and be in contact with the top and bottom of the container. **In the event the material does not fit snugly on the top or sides, open-cell pads or thicknesses of corrugated board must be added, no exceptions (**MDD will not accept containers with packing peanuts). Top and bottom flaps must be closed and fastened firmly with water-resistant adhesive. Adhesive must be applied over not less than 50 percent of the area of contact between the inner and outer flaps. The bottom flaps may be stapled instead of glued, provided this is done before the container is packed.

(k) *At contractor's option*, containers may be sealed with tape which must completely cover the butted edges of the flaps and extend at least 2" on the ends of the containers. Tapes may be either a minimum 3" wide fiberglass reinforced non- strippable gummed paper tape that conforms to Commercial Item Description A-A-1671B and any amendments thereto; a minimum 2" wide waterproof, pressure-sensitive adhesive tape that conforms to ASTM D5486 and any amendments thereto; or a minimum 1-inch wide Type III, pressure-sensitive, filament tape that conforms to ASTM D5330 and any amendments thereto.

(l) *Noncompliance* with the packaging specifications may be cause for the Government to reject the shipment, at destination, and return it to the contractor at their expense. After giving notice of the deficiency and affording the contractor an opportunity and a reasonable time to correct if time allows, the Government may, at its option, repackage in accordance with the specifications and charge all costs to the contractor.

LABELING AND MARKING.

Shipping and packing labels must be furnished by the contractor in accordance with these specifications. Contractors are not permitted to display advertisements on skids, pallets, shipping containers, or boxes. All labels and entries made thereon must conform to and be in accordance with these specifications and accurately reflect the contents (including quantity) of all packaged units.

(a) Inner packages. Each inner package must be marked or labeled with the Department name, Requisition number, Form number (including any revision dates, if any), title and quantity. Mark or label boxes and wrapped packages only on one end – (never top, bottom, or sides). Banded packages should be marked on the band. Tied packages should be labeled on chipboard or newsboard. Shrink film packages must be labeled, not marked, on the top or the end. Labels may be placed inside the wrap.

(b) Shipping containers. Each shipping container must have the shipping label applied to one end – (not top, bottom or sides). The label shall be reproduced to 7-7/8" x 6-1/8" from the label (Form 905) posted on gpo.gov in black ink on white paper. The label must be filled in accurately and legibly, using bold characters at least 1/4" high, except the "From" box which may be smaller. The name and requisition number of the receiving department must be used in the "Dept." box and "Dept Req. No." box on all shipping container labels in lieu of the name and requisition number of the order department. Label entries must remain clear and legible for a period of at least two (2) years under normal warehouse conditions. Label information may be rearranged on shipping containers of such dimensions that prevent acceptance of 7-7/8" x 6-1/8" labels.

(c) Bar Code Markings. When indicated, bar code markings will be required on inner packages and/ or shipping containers. Bar code using standard 3 of 9 (Code 39) Bar Code System, for noncontact reading, in

accordance with Military Standard1189. The bar code label must be positioned in accordance with Federal Standard 123.

(d) Shipping bundles. The information required on the facsimile label (Form 905) must appear in a convenient location on each shipping bundle.

(e) Mailed shipments. A separate mailing label conforming to Postal Regulations must be used for all shipments by U.S. mail.

(f) Noncompliance with labeling and marking specifications may be cause for the Government to reject the shipment, at destination, and return it to the contractor at their expense. After giving notice of the deficiency and affording the contractor an opportunity and a reasonable time to correct if time allows, the Government may, at its option, relabel and/or remark in accordance with the specifications and charge all costs to the contractor.

PALLETIZING.

(a) When indicated in specifications, the contractor shall furnish pallets for bulk shipments, in shipping containers, when the containers fill two layers or more on the pallet.

(b) Pallets must be type III, size 2, group 2 (or group 3 contractor's option) made in accordance with Federal Specification NN–P–71C and any amendments thereto. Full entry must be on the long dimension.

(c) Material may be secured on pallet by stretch-wrap plastic, plastic shrink-wrap, steel strapping or plastic or nylon strapping over edge protectors. Fasten with straps over edge protectors when the containers fill more than 2 layers on the pallet. Pallets shall be suitably packed so as to insure acceptance and safe delivery by common carrier. Maximum height allowed including pallet is 55". Maximum gross weight is 2,000 lbs. Must be palletized with a minimum of a 19 mm (3/4") void, on all sides, to the outside of the pallet.

(d) Noncompliance with the palletizing specifications may be cause for the Government to reject the shipment at destination and return it to the contractor at their expense. The Government may, at its option, offer the contractor an opportunity and a reasonable time to correct, however, the Government may choose to repackage in accordance with the specifications and charge all costs to the contractor.

Pallet Requirements

For Army Deliveries to St. Louis, Missouri

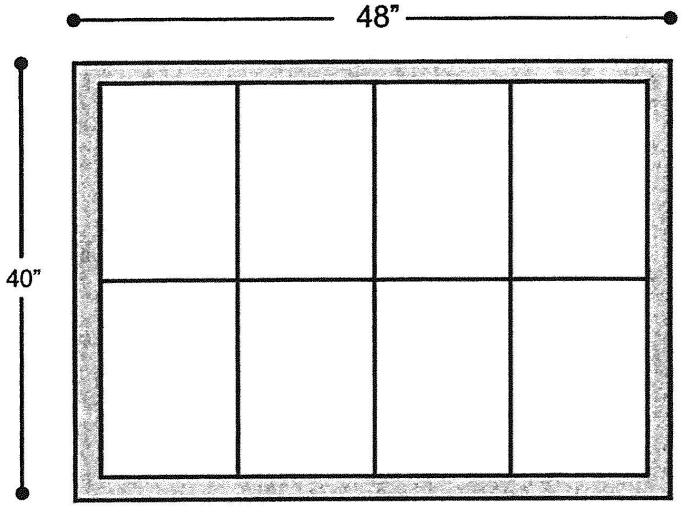

8 CARTON LAYER

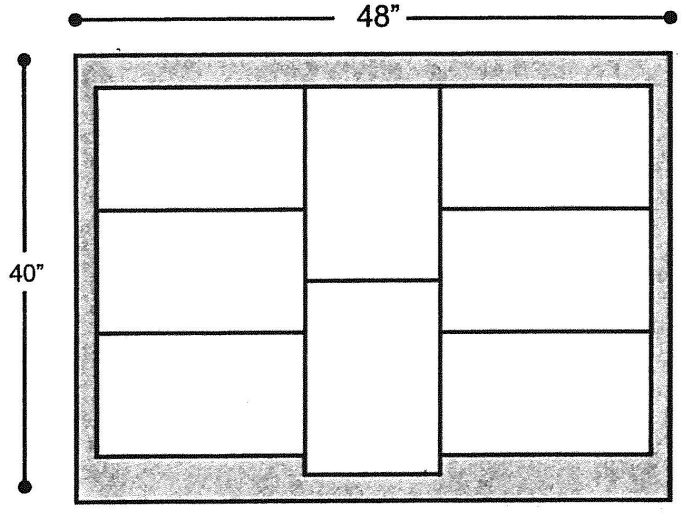

8 CARTON LAYER
(ALTERNATING TIERS)
Total of 5 Layers
(NOTE: Pallet diagram gray areas designate "free space")

SHIPPING AND PACKING REQUIREMENTS (In accordance with GPO Contract Terms (GPO Publication 310.2)

.Pallets of 40" (L) X 48" (W) assembled flush with 4 stringers
.Pallets must be 4-way (partial) with full entry on 48" width
.Cartons must be fastened securely to pallets
.Height of full pallet must not exceed 55"

.Cartons must be 275 psi bursting strength
. Cartons must be packed solidly; not to exceed 45 lbs.
. White labels with black image of bold, 1/4" height entries
.Inner packages require labels

NOTE: Shipments to U.S. Army Distribution center in St. Louis, MO, must be palletized with a minimum of a 19 mm (3/4") void, on all sides, to the outside of the pallet.

Stringer and Deckboard Design for Type III, Four-way (Partial) Flush Pallet

a) Federal Specification Pallets, Material Handling, Wood, Stringer Construction, 2-way and 4-way (partial), NN-P-71C, dated 9-10-73.
b) Classification:
1. Type III—four-way (partial), flush, assembled, nonreversible.
2. Size 2—40" x 48".
3. Wood Group II—medium density woods (softwoods), or Wood Group III—high density woods (hardwoods).
4. Grade A—untreated.
c) Preproduction model not required.
d) Moisture content as per specification.
e) Manufacturer's identification not required.
f) Bundling for shipment not required.

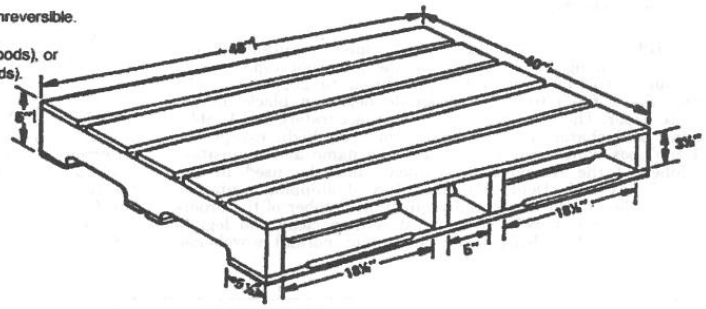

NN-P-71C

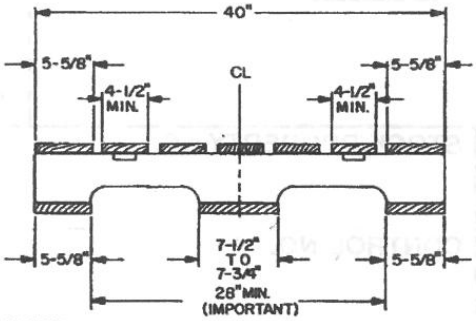

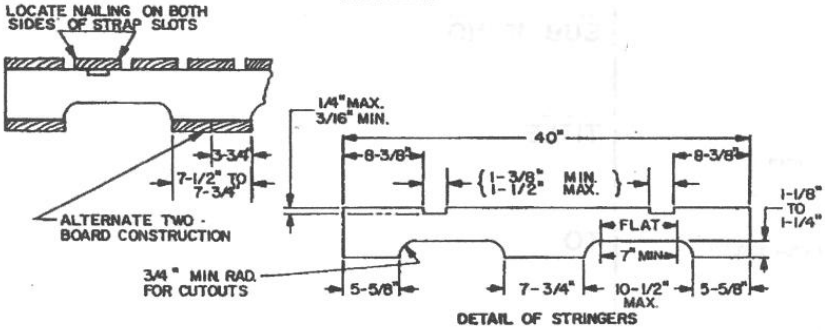

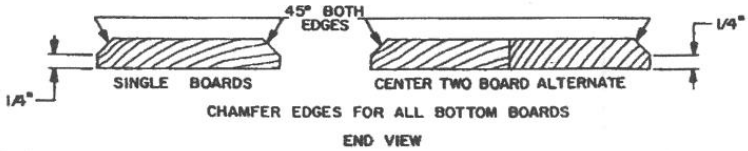

1. Dimensions are in inches.
2. Notches are to be centered about the centerline (CL).
3. Corners of notches shall be rounded as indicated.
4. One or two bottom deckboards may be used at the center.

LABELING AND MARKING SPECIFICATIONS

INNER PACKAGES: Each inner package must be marked or labeled with the following: department name and requisition number, form number (including revision date, if any), title, and quantity. Mark or label boxes and wrapped packages on
one end (never top, bottom, or sides), banded packages on the band, and tied packages on the chipboard or newsboard. Shrink film packages must be labeled, not marked, on the top or the end; labels may be placed inside the wrap.

SHIPPING CONTAINERS: Each shipping container must have a shipping label applied to one end (not top, bottom, or sides). The label shall be reproduced to from the facsimile below in black ink on white paper. The label must be filled in accurately and legibly, using bold characters at least (") high, except the "From" box which may be smaller. The name and requisition number of the receiving department must be used in the "Dept." box and "Dept. Req. No." box of shipping container labels in lieu of the name and requisition number of the ordering department. Label entries must remain clear and legible for a period of at least two years under normal warehouse conditions. Label information may be rearranged on shipping containers of such dimensions that preclude acceptance of (77/8 x 61/8") labels.

SHIPPING BUNDLES: The information required in the facsimile below must appear in a convenient location on each shipping bundle.

MAILED SHIPMENTS: A separate mailing label conforming to Postal Regulations must be used for all shipments by U. S. mail.

CAUTION: Noncompliance with the labeling and marking specifications may be cause for the Government to reject the shipment, at destination, and return it to the contractor at his expense. After giving notice of the deficiency and affording the contractor an opportunity and a reasonable time to correct, the Government may, at its option, relabel and/or remark in accordance with the specifications and charge all costs to the contractor.

Attachment B:

From:	THIS FORM IS UTILIZING BARCODE 128 FOR USPS DELIVERY APPLY POSTAGE
ARN No.	9 Digit PIN No.:
DEPT Requisition No.*	Stock/Item No.:
GPO Jacket No.**	FY / Program / Print Order No.:
Printing Specialist Name*	
Publication Date	Form or Publication No.:
Quantity Per Container	To:
Packages Per Container PKGS OF	

APD FORM 128, JUL 2019 *OPTIONAL **MUST BE COMPLETED FOR GPO SF1 APD AEM v1.00ES