AUTHENTICATED
U.S. GOVERNMENT
INFORMATION
GPO

code of federal regulations

Protection of Environment

40

PARTS 1 TO 51

Revised as of July 1, 1996

CONTAINING
A CODIFICATION OF DOCUMENTS
OF GENERAL APPLICABILITY
AND FUTURE EFFECT

AS OF JULY 1, 1996

With Ancillaries

Published by
the Office of the Federal Register
National Archives and Records
Administration

as a Special Edition of
the Federal Register

U.S. GOVERNMENT PRINTING OFFICE
WASHINGTON : 1996

For sale by U.S. Government Printing Office
Superintendent of Documents, Mail Stop: SSOP, Washington, DC 20402–9328

Table of Contents

	Page
Explanation	v
Title 40:	
Chapter I—Environmental Protection Agency	3
Finding Aids:	
Material Approved for Incorporation by Reference	1069
Table of CFR Titles and Chapters	1071
Alphabetical List of Agencies Appearing in the CFR	1087
Redesignation Table	1097
List of CFR Sections Affected	1101

Cite this Code: CFR

To cite the regulations in this volume use title, part and section number. Thus, 40 CFR 1.1 *refers to title 40, part 1, section 1.*

Explanation

The Code of Federal Regulations is a codification of the general and permanent rules published in the Federal Register by the Executive departments and agencies of the Federal Government. The Code is divided into 50 titles which represent broad areas subject to Federal regulation. Each title is divided into chapters which usually bear the name of the issuing agency. Each chapter is further subdivided into parts covering specific regulatory areas.

Each volume of the Code is revised at least once each calendar year and issued on a quarterly basis approximately as follows:

Title 1 through Title 16.....as of January 1
Title 17 through Title 27.....as of April 1
Title 28 through Title 41.....as of July 1
Title 42 through Title 50.....as of October 1

The appropriate revision date is printed on the cover of each volume.

LEGAL STATUS

The contents of the Federal Register are required to be judicially noticed (44 U.S.C. 1507). The Code of Federal Regulations is prima facie evidence of the text of the original documents (44 U.S.C. 1510).

HOW TO USE THE CODE OF FEDERAL REGULATIONS

The Code of Federal Regulations is kept up to date by the individual issues of the Federal Register. These two publications must be used together to determine the latest version of any given rule.

To determine whether a Code volume has been amended since its revision date (in this case, July 1, 1996), consult the ''List of CFR Sections Affected (LSA),'' which is issued monthly, and the ''Cumulative List of Parts Affected,'' which appears in the Reader Aids section of the daily Federal Register. These two lists will identify the Federal Register page number of the latest amendment of any given rule.

EFFECTIVE AND EXPIRATION DATES

Each volume of the Code contains amendments published in the Federal Register since the last revision of that volume of the Code. Source citations for the regulations are referred to by volume number and page number of the Federal Register and date of publication. Publication dates and effective dates are usually not the same and care must be exercised by the user in determining the actual effective date. In instances where the effective date is beyond the cutoff date for the Code a note has been inserted to reflect the future effective date. In those instances where a regulation published in the Federal Register states a date certain for expiration, an appropriate note will be inserted following the text.

OMB CONTROL NUMBERS

The Paperwork Reduction Act of 1980 (Pub. L. 96–511) requires Federal agencies to display an OMB control number with their information collection request.

Many agencies have begun publishing numerous OMB control numbers as amendments to existing regulations in the CFR. These OMB numbers are placed as close as possible to the applicable recordkeeping or reporting requirements.

OBSOLETE PROVISIONS

Provisions that become obsolete before the revision date stated on the cover of each volume are not carried. Code users may find the text of provisions in effect on a given date in the past by using the appropriate numerical list of sections affected. For the period before January 1, 1986, consult either the List of CFR Sections Affected, 1949–1963, 1964–1972, or 1973–1985, published in seven separate volumes. For the period beginning January 1, 1986, a ''List of CFR Sections Affected'' is published at the end of each CFR volume.

INCORPORATION BY REFERENCE

What is incorporation by reference? Incorporation by reference was established by statute and allows Federal agencies to meet the requirement to publish regulations in the Federal Register by referring to materials already published elsewhere. For an incorporation to be valid, the Director of the Federal Register must approve it. The legal effect of incorporation by reference is that the material is treated as if it were published in full in the Federal Register (5 U.S.C. 552(a)). This material, like any other properly issued regulation, has the force of law.

What is a proper incorporation by reference? The Director of the Federal Register will approve an incorporation by reference only when the requirements of 1 CFR part 51 are met. Some of the elements on which approval is based are:

(a) The incorporation will substantially reduce the volume of material published in the Federal Register.

(b) The matter incorporated is in fact available to the extent necessary to afford fairness and uniformity in the administrative process.

(c) The incorporating document is drafted and submitted for publication in accordance with 1 CFR part 51.

Properly approved incorporations by reference in this volume are listed in the Finding Aids at the end of this volume.

What if the material incorporated by reference cannot be found? If you have any problem locating or obtaining a copy of material listed in the Finding Aids of this volume as an approved incorporation by reference, please contact the agency that issued the regulation containing that incorporation. If, after contacting the agency, you find the material is not available, please notify the Director of the Federal Register, National Archives and Records Administration, Washington DC 20408, or call (202) 523–4534.

CFR INDEXES AND TABULAR GUIDES

A subject index to the Code of Federal Regulations is contained in a separate volume, revised annually as of January 1, entitled CFR INDEX AND FINDING AIDS. This volume contains the Parallel Table of Statutory Authorities and Agency Rules (Table I), and Acts Requiring Publication in the Federal Register (Table II). A list of CFR titles, chapters, and parts and an alphabetical list of agencies publishing in the CFR are also included in this volume.

An index to the text of ''Title 3—The President'' is carried within that volume.

The Federal Register Index is issued monthly in cumulative form. This index is based on a consolidation of the ''Contents'' entries in the daily Federal Register.

A List of CFR Sections Affected (LSA) is published monthly, keyed to the revision dates of the 50 CFR titles.

REPUBLICATION OF MATERIAL

There are no restrictions on the republication of material appearing in the Code of Federal Regulations.

INQUIRIES

For a legal interpretation or explanation of any regulation in this volume, contact the issuing agency. The issuing agency's name appears at the top of odd–numbered pages.

For inquiries concerning CFR reference assistance, call 202–523–5227 or write to the Director, Office of the Federal Register, National Archives and Records Administration, Washington, DC 20408.

SALES

The Government Printing Office (GPO) processes all sales and distribution of the CFR. For payment by credit card, call 202–512–1800, M–F, 8 a.m. to 4 p.m. e.s.t. or fax your order to 202–512–2233, 24 hours a day. For payment by check, write to the Superintendent of Documents, Attn: New Orders, P.O. Box 371954, Pittsburgh, PA 15250–7954. For GPO Customer Service call 202–512–1803.

RICHARD L. CLAYPOOLE,
Director,
Office of the Federal Register.

July 1, 1996.

THIS TITLE

Title 40—PROTECTION OF ENVIRONMENT is composed of eighteen volumes. The parts in these volumes are arranged in the following order: parts 1–51, part 52, parts 53–59, part 60, parts 61–71, parts 72–80, parts 81–85, part 86, parts 87–135, parts 136–149, parts 150–189, parts 190–259, parts 260–299, parts 300–399, parts 400–424, parts 425–699, parts 700–789 and part 790 to end. The contents of these volumes represent all current regulations codified under this title of the CFR as of July 1, 1996.

Chapter I—Environmental Protection Agency appears in all eighteen volumes. A Pesticide Tolerance Commodity/Chemical Index appears in parts 150–189. A Toxic Substances Chemical—CAS Number Index appears in parts 700–789 and part 790 to end. Redesignation Tables appear in the volumes containing parts 1–51, parts 150–189, and parts 700–789. Regulations issued by the Council on Environmental Quality appear in the volume containing part 790 to end.

The OMB control numbers for title 40 appear in §9.1 of this chapter. For the convenience of the user, §9.1 appears in the Finding Aids section of the volumes containing parts 52 to the end.

For this volume, Ann Elise Maso was Chief Editor. The Code of Federal Regulations publication program is under the direction of Frances D. McDonald, assisted by Alomha S. Morris.

Would you like to know...

if any changes have been made to the *Code of Federal Regulations* or what documents have been published in the *Federal Register* without reading the *Federal Register* every day? If so, you may wish to subscribe to the *LSA* (List of CFR Sections Affected), the *Federal Register Index,* or both.

LSA
The *LSA* (List of CFR Sections Affected) is designed to lead users of the *Code of Federal Regulations* to amendatory actions published in the *Federal Register*. The *LSA* is issued monthly in cumulative form. Entries indicate the nature of the changes—such as revised, removed, or corrected.
$26 per year ($32.50 foreign).

Federal Register Index
The index, covering the contents of the daily *Federal Register,* is issued monthly in cumulative form. Entries are carried primarily under the names of the issuing agencies. Significant subjects are carried as cross-references.
$24 per year ($30.00 foreign).

A finding aid is included in each publication which lists *Federal Register* page numbers with the date of publication in the *Federal Register*.

Superintendent of Documents Subscription Order Form

Order Processing Code:
***5421**

❑ **YES,** send me the following indicated subscriptions for one year:

____ **LSA (List of CFR Sections Affected),** (LCS) for $26 per year ($32.50 foreign).

____ **Federal Register Index** (FRSU) $24 per year ($30.00 foreign).

The total cost of my order is $_____.
Price is subject to change.

(Includes regular shipping and handling.)

For privacy check box below:
❑ Do not make my name available to other mailers

Check method of payment:
❑ Check payable to Superintendent of Documents
❑ GPO Deposit Account ☐☐☐☐☐☐☐ – ☐
❑ VISA ❑ MasterCard ☐☐☐☐ (expiration date)

Company or personal name

Street address

City, State, ZIP code

Daytime phone with area code

Purchase order No. (optional)

Credit card No. (must be 20 digits)

Thank you for your order!

Authorizing signature 5/96

Fax your orders (202) 512–2250
Phone your orders (202) 512–1800

Mail To: Superintendent of Documents
P.O. Box 371954, Pittsburgh, PA 15250–7954

Title 40—Protection of Environment

(This book contains parts 1 to 51)

Part

CHAPTER I—Environmental Protection Agency 1

CHAPTER I—ENVIRONMENTAL PROTECTION AGENCY

SUBCHAPTER A—GENERAL

Part		*Page*
1	Statement of organization and general information	5
2	Public information	23
3	Employee responsibilities and conduct	72
4	Uniform relocation assistance and real property acquisition for Federal and federally assisted programs	95
5	Tuition fees for direct training	95
6	Procedures for implementing the requirements of the Council on Environmental Quality on the National Environmental Policy Act	97
7	Nondiscrimination in programs receiving Federal assistance from the Environmental Protection Agency	137
9	OMB approvals under the Paperwork Reduction Act	149
10	Administrative claims under Federal Tort Claims Act	168
11	Security classification regulations pursuant to Executive Order 11652	171
12	Nondiscrimination on the basis of handicap in programs or activities conducted by the Environmental Protection Agency	175
13	Claims collection standards	181
14	Employee personal property claims	198
16	Implementation of Privacy Act of 1974	201
17	Implementation of the Equal Access to Justice Act in EPA administrative proceedings	213
20	Certification of facilities	218
21	Small business	226
22	Consolidated rules of practice governing the administrative assessment of civil penalties and the revocation or suspension of permits	235
23	Judicial review under EPA—Administered statutes	258

Part		Page
24	Rules governing issuance of and administrative hearings on interim status corrective action orders	260
25	Public participation in programs under the Resource Conservation and Recovery Act, the Safe Drinking Water Act, and the Clean Water Act	267
26	Protection of Human Subjects	277
27	Program fraud civil remedies	288
29	Intergovernmental review of Environmental Protection Agency programs and activities	304
	SUBCHAPTER B—GRANTS AND OTHER FEDERAL ASSISTANCE	
30	Grants and agreements with institutions of higher education, hospitals, and other non-profit organizations	309
31	Uniform administrative requirements for grants and cooperative agreements to State and local governments	335
32	Governmentwide debarment and suspension (nonprocurement) and governmentwide requirements for drug-free workplace (grants); Clean Air Act and Clean Water Act ineligibility of facilities in performance of Federal contracts, grants and loans	371
34	New restrictions on lobbying	391
35	State and local assistance	403
39	Loan guarantees for construction of treatment works	628
40	Research and demonstration grants	632
45	Training assistance	642
46	Fellowships	644
47	National Environmental Education Act Grants	647
	SUBCHAPTER C—AIR PROGRAMS	
50	National primary and secondary ambient air quality standards	650
51	Requirements for preparation, adoption, and submittal of implementation plans	730

EDITORIAL NOTE: Subchapter C—Air Programs is continued in the volumes containing 40 CFR part 52, parts 53–60, parts 61–80, and parts 81–99.

SUBCHAPTER A—GENERAL

PART 1—STATEMENT OF ORGANIZATION AND GENERAL INFORMATION

Subpart A—Introduction

Sec.
1.1 Creation and authority.
1.3 Purpose and functions.
1.5 Organization and general information.
1.7 Location of principal offices.

Subpart B—Headquarters

1.21 General.
1.23 Office of the Administrator.
1.25 Staff Offices.
1.27 Offices of the Associate Administrators.
1.29 Office of Inspector General.
1.31 Office of General Counsel.
1.33 Office of Administration and Resources Management.
1.35 Office of Enforcement and Compliance Monitoring.
1.37 Office of External Affairs.
1.39 Office of Policy, Planning and Evaluation.
1.41 Office of Air and Radiation.
1.43 Office of Prevention, Pesticides and Toxic Substances.
1.45 Office of Research and Development.
1.47 Office of Solid Waste and Emergency Response.
1.49 Office of Water.

Subpart C—Field Installations

1.61 Regional Offices.

AUTHORITY: 5 U.S.C. 552.

SOURCE: 50 FR 26721, June 28, 1985, unless otherwise noted.

Subpart A—Introduction

§1.1 Creation and authority.

Reorganization Plan 3 of 1970, established the U.S. Environmental Protection Agency (EPA) in the Executive branch as an independent Agency, effective December 2, 1970.

§1.3 Purpose and functions.

The U.S. Environmental Protection Agency permits coordinated and effective governmental action to assure the protection of the environment by abating and controlling pollution on a systematic basis. Reorganization Plan 3 of 1970 transferred to EPA a variety of research, monitoring, standard setting, and enforcement activities related to pollution abatement and control to provide for the treatment of the environment as a single interrelated system. Complementary to these activities are the Agency's coordination and support of research and antipollution activities carried out by State and local governments, private and public groups, individuals, and educational institutions. EPA reinforces efforts among other Federal agencies with respect to the impact of their operations on the environment.

§1.5 Organization and general information.

(a) The U.S. Environmental Protection Agency's basic organization consists of Headquarters and 10 Regional Offices. EPA Headquarters in Washington, DC maintains overall planning, coordination and control of EPA programs. Regional Administrators head the Regional Offices and are responsible directly to the Administrator for the execution of the Agency's programs within the boundaries of their Regions.

(b) EPA's Directives System contains definitive statements of EPA's organization, policies, procedures, assignments of responsibility, and delegations of authority. Copies are available for public inspection and copying at the Management and Organization Division, 401 M Street SW., Washington, DC 20460. Information can be obtained from the Office of Public Affairs at all Regional Offices.

(c) EPA conducts procurement pursuant to the Federal Property and Administrative Services Act, the Federal Procurement Regulations, and implementing EPA regulations.

§1.7 Location of principal offices.

(a) The EPA Headquarters is in Washington, DC. The mailing address is 401 M Street SW., Washington, DC 20460.

(b) The addresss of (and States served by) the EPA Regional Offices (see §1.61) are:

(1) Region I, U.S. Environmental Protection Agency, room 2203, John F. Kennedy Federal Building, Boston, MA 02203. (Connecticut, Maine, Massachusetts, New Hampshire, Rhode Island, and Vermont.)

(2) Region II, U.S. Environmental Protection Agency, Room 900, 26 Federal Plaza, New York, NY 10278. (New Jersey, New York, Puerto Rico, and the Virgin Islands.)

(3) Region III, U.S. Environmental Protection Agency, 841 Chestnut Street, Philadelphia, PA 19107. (Delaware, Maryland, Pennsylvania, Virginia, West Virginia, and the District of Columbia.)

(4) Region IV, U.S. Environmental Protection Agency, 345 Courtland Street NE., Atlanta, GA 30365. (Alabama, Florida, Georgia, Kentucky, Mississippi, North Carolina, South Carolina, and Tennessee.)

(5) Region V, U.S. Environmental Protection Agency, 230 South Dearborn Street, Chicago, IL 60604. (Illinois, Indiana, Michigan, Minnesota, Ohio and Wisconsin.)

(6) Region VI, U.S. Environmental Protection Agency, 1201 Elm Street, Dallas, TX 75270. (Arkansas, Louisiana, New Mexico, Oklahoma, and Texas.)

(7) Region VII, U.S. Environmental Protection Agency, 726 Minnesota Avenue, Kansas City, KS 66101. (Iowa, Kansas, Missouri, and Nebraska.)

(8) Region VIII, U.S. Environmental Protection Agency, 999 18th street, One Denver Place, Denver, CO 80202. (Colorado, Montana, North Dakota, South Dakota, Utah, and Wyoming.)

(9) Region IX, U.S. Environmental Protection Agency, 215 Fremont Street, San Francisco, CA 94105. (Arizona, California, Hawaii, Nevada, American Samoa, Trust Territories of the Pacific Islands, Guam, Wake Islands, and the Northern Marianas.)

(10) Region X, U.S. Environmental Protection Agency, 1200 Sixth Avenue, Seattle, WA 98101. (Alaska, Idaho, Oregon, and Washington.)

Subpart B—Headquarters

§ 1.21 General.

EPA Headquarters is comprised of:

(a) The Office of the Administrator;

(b) Two Associate Administrators and four staff offices which advise the Administrator on cross-cutting Agency headquarters and regional issues and conduct programs with respect to EPA's interface with other national and international governmental organizations;

(c) The Office of Inspector General;

(d) The Office of General Counsel; and

(e) Nine operational offices, each headed by an Assistant Administrator, responsible for carrying out EPA's major environmental and administrative programs.

§ 1.23 Office of the Administrator.

The Environmental Protection Agency is headed by an Administrator who is appointed by the President, by and with the consent of the Senate. The Administrator is responsible to the President for providing overall supervision to the Agency, and is assisted by a Deputy Administrator also appointed by the President, by and with the consent of the Senate. The Deputy Administrator assists the Administrator in the discharge of Agency duties and responsibilities and serves as Acting Administrator in the absence of the Administrator.

§ 1.25 Staff Offices.

(a) *Office of Administrative Law Judges.* The Office of Administrative Law Judges, under the supervision of the Chief Administrative Law Judge, is responsible for presiding over and conducting formal hearings, and issuance of initial decisions, if appropriate, in such proceedings. The Office provides supervision of the Administrative Law Judges, who operate as a component of the Office of Administrative Law Judges, in certain Agency Regional Offices. The Office provides the Agency Hearing Clerk.

(b) *Office of Civil Rights.* The Office of Civil Rights, under the supervision of a Director, serves as the principal adviser to the Administrator with respect to EPA's civil rights programs. The Office develops policies, procedures, and regulations to implement the Agency's civil rights responsibilities, and provides direction to Regional and field activities in the Office's area of responsibilities. The Office implements and

monitors the Agency's equal employment opportunity program; provides advice and guidance to EPA program officials and Regional Administrators on EEO matters; serves as advocate for furthering career opportunities for minorities and women; and processes complaints of discrimination for Agency disposition. The office assures:

(1) Maximum participation of minority business enterprises under EPA contracts and grants;

(2) Equal employment opportunity under Agency service contracts, construction contracts, and grants;

(3) Compliance with the Davis-Bacon Act and related acts;

(4) Compliance with the provisions of laws affecting Agency programs requiring nondiscrimination on account of age and physical handicap and;

(5) Services or benefits are dispensed under any program or activity receiving Agency financial assistance on a nondiscrimination basis.

(c) *Science Advisory Board.* The Science Advisory Board, under the direction of a Director, provides expert and independent advice to the Administrator on the scientific and technical issues facing the Agency. The Office advises on broad, scientific, technical and policy matters; assesses the results of specific research efforts; assists in identifying emerging environmental problems; and advises the Administrator on the cohesiveness and currency of the Agency's scientific programs.

(d) *Office of Small and Disadvantaged Business Utilization.* The Office of Small and Disadvantaged Business Utilization, under the supervision of a Director, is responsible for developing policy and procedures implementing the Agency's small and disadvantaged business utilization responsibilities. The Office provides information and assistance to components of the Agency's field offices responsible for carrying out related activities. The Office develops and implements a program to provide the maximum utilization of women-owned business enterprises in all aspects of EPA contract work; in collaboration with the Procurement and Contracts Management Division, develops programs to stimulate and improve involvement of small and minority business enterprises; and recommends the assignment of technical advisers to assist designated Procurement Center Representatives of the Small Business Administration in their duties. The Office represents EPA at hearings, interagency meetings, conferences and other appropriate forums on matters related to the advancement of these cited business enterprises in EPA's Federal Contracting Program.

(e)(1) *Environmental Appeals Board.* The Environmental Appeals Board is a permanent body with continuing functions composed of three Board Members designated by the Administrator. The Environmental Appeals Board shall decide each matter before it in accordance with applicable statutes and regulations. The Environmental Appeals Board shall decide each matter by majority vote. Two Board Members constitute a quorum, and if the absence or recusal of a Board Member so requires, the Board shall sit as a Board of two Members. In the case of a tie vote, the matter shall be referred to the Administrator to break the tie.

(2) *Functions.* The Environmental Appeals Board shall exercise any authority expressly delegated to it in this title. With respect to any matter for which authority has not been expressly delegated to the Environmental Appeals Board, the Environmental Appeals Board shall, at the Administrator's request, provide advice and consultation, make findings of fact and conclusions of law, prepare a recommended decision, or serve as the final decisionmaker, as the Administrator deems appropriate. In performing its functions, the Environmental Appeals Board may consult with any EPA employee concerning any matter governed by the rules set forth in this title, provided such consultation does not violate applicable ex parte rules in this title.

(3) *Qualifications.* Each member of the Environmental Appeals Board shall be a graduate of an accredited law school and a member in good standing of a recognized bar association of any state or the District of Columbia. Board Members shall not be employed by the Office of Enforcement, the Office of the General Counsel, a Regional Office, or any other office directly associated

with matters that could come before the Environmental Appeals Board. A Board Member shall recuse himself or herself from deciding a particular case if that Board Member in previous employment performed prosecutorial or investigative functions with respect to the case, participated in the preparation or presentation of evidence in the case, or was otherwise personally involved in the case.

[50 FR 26721, June 28, 1985, as amended at 57 FR 5323, Feb. 13, 1992]

§ 1.27 Offices of the Associate Administrators.

(a) *Office of International Activities.* The Office of International Activities, under the supervision of an Associate Administrator, provides direction to and supervision of the activities, programs, and staff assigned to the Office of International Activities. All of the functions and responsibilities of the Associate Administrator are Agency-wide, and apply to all international activities of the Agency. The Office develops policies and procedures for the direction of the Agency's international programs and activities, subject to U.S. foreign policy, and assures that adequate program, scientific, and legal inputs are provided. It conducts continuing evaluations of the Agency's international activities and makes appropriate recommendations to the Administrator. The Office advises the Administrator and principal Agency officials on the progress and effect of foreign and international programs and issues. The Office serves as the Administrator's representative in contacts with the Department of State and other Federal agencies concerned with international affairs. It negotiates arrangements or understandings relating to international cooperation with foreign organizations. The Office coordinates Agency international contacts and commitments; serves as the focal point for responding to requests for information relating to EPA international activities; and provides an initial point of contact for all foreign visitors. The Office maintains liaison with all relevant international organizations and provides representation where appropriate. It establishes Agency policy, and approves annual plans and modifications for travel abroad and attendance at international conferences and events. It provides administrative support for the general activities of the Executive Secretary of the U.S. side of the US–USSR/PRC agreements on environmental protection and of the U.S. Coordinator for the NATO Committee on the Challenges of Modern Society. The Office supervises these programs with respect to activities which are completely within the purview of EPA.

(b) *Office of Regional Operations.* The Office of Regional Operations, under the supervision of an Associate Administrator, reports directly to the Administrator and Deputy Administrator. The Office serves as the primary communications link between the Administrator/Deputy Administrator and the Regional Administrators. It provides a Headquarters focus for ensuring the involvement of Regions, or consideration of Regional views and needs, in all aspects of the Agency's work. The Office is responsible for assuring Regional participation in Agency decision-making processes, assessing the impact of Headquarters actions on Regional operations, and acting as ombudsman to resolve Regional problems on behalf of the Administrator. The Associate Administrator coordinates Regional issues, organizes Regional Administrator meetings and work groups; and coordinates Regional responses to specific issues. In addition, the Office is responsible for working with the Regional Offices to further the consistent application of national program policies by reinforcing existing administrative, procedural, and program policy mechanisms as well as through initiation of reviews of significant Regional issues of interest to the Administrator. It continually monitors responsiveness and compliance with established policies and technical needs through formal and informal contact and free dialogue. The Office initiates and conducts on-site field visits to study, analyze, and resolve problems of Regional, sectional, and national scale.

§ 1.29 Office of Inspector General.

The Office of Inspector General assumes overall responsibility for audits

and investigations relating to EPA programs and operations. The Office provides leadership and coordination and recommends policies for other Agency activities designed to promote economy and efficiency and to prevent and detect fraud and abuse is such programs and operations. The Office of the Inspector General informs the Administrator, Deputy Administrator, and Congress of serious problems, abuses and deficiencies relating to EPA programs and operations, and of the necessity for and progress of corrective action; and reviews existing and proposed legislation and regulations to assess the impact on the administration of EPA's programs and operations. The Office recommends policies for, and conducts or coordinates relationships between, the Agency and other Federal, State and local government agencies, and nongovernmental entities on all matters relating to the promotion of economy and efficiency in the administration of, or the prevention and detection of fraud and abuse in, programs and operations administered by the Agency.

§ 1.31 Office of General Counsel.

The Office of General Counsel is under the supervision of the General Counsel who serves as the primary legal adviser to the Administrator. The office provides legal services to all organizational elements of the Agency with respect to all Agency programs and activities and also provides legal opinions, legal counsel, and litigation support; and assists in the formulation and administration of the Agency's policies and programs as legal adviser.

§ 1.33 Office of Administration and Resources Management.

The Office of Administration and Resources Management is under the supervision of the Assistance Administrator for Administration and Resources Management who provides services to all of the programs and activities of the Agency, except as may be specifically noted. In addition, the Assistant Administrator has primary responsibility Agencywide for policy and procedures governing the functional areas outlined below. The major functions of the Office include resources management and systems (including budget and financial management), personnel services, occupational health and safety, administrative services, organization and management analysis and systems development, information management and services, automated data processing systems, procurement through contracts and grants, and human resources management. This Office is the primary point of contact and manages Agencywide internal controls, audit resolution and follow up, and government-wide management improvement initiatives. In the performance of the above functions and responsibilities, the Assistant Administrator for Administration and Resources Management represents the Administrator in communications with the Office of Management and Budget, Office of Personnel Management, General Accounting Office, General Services Administration, Department of the Treasury, and other Federal agencies prescribing requirements for the conduct of Government budget, fiscal management and administrative activities.

(a) *Office of Administration and Resources Management, Research Triangle Park, North Carolina, (RTP).* The Office of Administration and Resources Management (OARM), RTP, under the supervision of a Director, provides services to all of the programs and activities at RTP and certain financial and automated data processing services Agencywide. The major functions of the Office include personnel services, financial management, procurement through contracts, library and other information services, general services (including safety and security, property and supply, printing, distribution, facilities and other administrative services) and providing both local RTP and Agencywide automated data processing systems services. The Director, OARM, RTP, supervises the Office of Administration, Financial Management and Data Processing, RTP.

(b) *Office of Administration, Cincinnati, Ohio.* The Office of Administration at Cincinnati, Ohio, under the supervision of a Director, provides and administers personnel, procurement, safety and security, property and supply, printing,

distribution, facilities, and other administrative service programs at Cincinnati and other specified geographic locations.

(c) *Office of the Comptroller.* The Office of the Comptroller, under the supervision of the Comptroller, is responsible for Agencywide budget, resources management and financial management functions, including program analysis and planning; budget formulation, preparation and execution; funding allotments and allocations; and developing and maintaining accounting systems, fiscal controls, and systems for payroll and disbursements. The Assistant Administrator's resource systems responsibilities are administered by this Office.

(d) *Office of Administration.* The Office of Administration, under the supervision of a Director, is responsible for the development and conduct of programs for personnel policies, procedures and operations; organization and management systems, control, and services; facilities, property and space management; personnel and property security; policies, procedures, and operations related to procurement through grants, contracts, and interagency agreements; and occupational health and safety.

(e) *Office of Information Resources Management.* The Office of Information Resources Management (OIRM), under the supervision of a Director, provides for an information resource management program (IRM) consistent with the provisions of Public Law 96–511. The Office establishes policy, goals and objectives for implementation of IRM; develops annual and long-range plans and budgets for IRM functions and activities; and promotes IRM concepts throughout the Agency. The Office coordinates IRM activities; plans, develops and operates information systems and services in support of the Agency's management and administrative functions, and other Agency programs and functions as required. The Office oversees the performance of these activities when carried out by other Agency components. The Office performs liaison for interagency sharing of information and coordinates IRM activities with OMB and GSA. The Office ensures compliance with requirements of Public Law 96–511 and other Federal laws, regulations, and guidelines relative to IRM; and chairs the Agency's IRM Steering Committee. The Office develops Agency policies and standards; and administers or oversees Agency programs for library systems and services, internal records management, and the automated collection, processing, storage, retrieval and transmission of data by or for Agency components and programs. The Office provides national program policy and technical guidance for: The acquisition of all information technology, systems and services by or for Agency components and programs, inculding those systems and services acquired by grantees and contractors using Agency funds; the operation of all Agency computers and telecommunications hardware and facilities; and the establishment and/or application of telecommunications and Federal information processing standards. The Office reviews and evaluates information systems and services, including office automation, which are operated by other Agency components; and sets standards for and approves the selection of Agency personnel who are responsible for the technical management of these activities. The Office coordinates its performance of these functions and activities with the Agency's information collection policies and budgets managed by the Office of Policy, Planning and Evaluation.

(f) *The Office of Human Resources Management.* The Office of Human Resources Management (OHRM), under the supervision of a Director, designs strategies, plans, and policies aimedat developing and training all employees, revitalizing EPA organizations, and matching the right people with the right jobs. The Office is responsible for developing and assuring implementation of policies and practices necessary for EPA to meet its present and future workforce needs. This includes consideration of the interrelationships between the environmental protection workforce needs of EPA and State governments. For Senior Executive Service (SES) personnel, SES candidates, Presidential Executive Interchange Participants, and Management Interns, OHRM establishes policies; assesses and projects Agency executive needs

and workforce capabilities; creates, establishes, and implements training and development strategies and programs; provides the full range of personnel functions; supports the Performance Review Board (PRB) and the Executive Resources Board (ERB); and reassigns SES personnel with the concurrence of the ERB. For the areas of workforce management and employee and organizational development, OHRM develops strategies, plans, and policies; coordinates Agencywide implementation of those strategies, plans, and policies; and provides technical assistance to operating personnel offices and States. OHRM, in cooperation with the Office of the Comptroller, evaluates problems with previous workyear use, monitors current workyear utilization, and projects future workyear needs in coordination with the Agency's budget process. The Office is the lead office for coordination of human resources management with the Agency's Strategic Planning and Management System. The Office develops methodologies and procedures for evaluations of Agency human resources management activities; conducts evaluations of human resources management activities Agencywide; and carries out human resources management projects of special interest to Agency management. The Office coordinates its efforts with the Office of Administration (specifically the Personnel Management Division and the Management and Organization Division), the Office of the Comptroller, the Office of Information Resources Management, and the Office of Policy, Planning and Evaluation.

§ 1.35 Office of Enforcement and Compliance Monitoring.

The Office of Enforcement and Compliance Monitoring, under the supervision of the Assistant Administrator for Enforcement and Compliance Monitoring, serves as the principal adviser to the Administrator in matters concerning enforcement and compliance; and provides the principal direction and review of civil enforcement activities for air, water, waste, pesticides, toxics, and radiation. The Assistant Administrator reviews the efforts of each Assistant and Regional Administrator to assure that EPA develops and conducts a strong and consistent enforcement and compliance monitoring program. The Office manages the national criminal enforcement program; ensures coordination of media office administrative compliance programs, and civil and criminal enforcement activities; and provides technical expertise for enforcement activities.

§ 1.37 Office of External Affairs.

(a) *Office of Federal Activities.* The Office of Federal Activities is headed by a Director who reports to the Assistant Administrator for External Affairs and supervises all the functions of the Office. The Director acts as national program manager for five major programs that include:

(1) The review of other agency environmental impact statements and other major actions under the authority of Section 309 of the Clean Air Act;

(2) EPA compliance with the National Environmental Policy Act (NEPA) and related laws, directives, and Executive policies concerning special environmental areas and cultural resources;

(3) Compliance with Executive policy on American Indian affairs and the development of programs for environmental protection on Indian lands; and

(4) The development and oversight of national programs and internal policies, strategies, and procedures for implementing Executive Order 12088 and other administrative or statutory provisions concerning compliance with environmental requirements by Federal facilities. The Director chairs the Standing Committee on Implementation of Executive Order 12088. The Office serves as the Environmental Protection Agency's (EPA) principal point of contact and liaison with other Federal agencies and provides consultation and technical assistance to those agencies relating to EPA's areas of expertise and responsibility. The Office administers the filing and information system for all Federal Environmental Impact Statements under agreement with the Council on Environmental Quality (CEQ) and provides liaison with CEQ on this function and related matters of NEPA program administration. The Office provides a central point of information for EPA and the

public on environmental impact assessment techniques and methodologies.

(b) *Office of Public Affairs.* The Office of Public Affairs is under the supervision of a Director who serves as chief spokesperson for the Agency and as a principal adviser, along with the Assistant Administrator for External Affairs, to the Adminstrator, Deputy Administrator, and Senior Management Officials, on public affairs aspects of the Agency's activities and programs. The Office of Public Affairs provides to the media adequate and timely information as well as responses to queries from the media on all EPA program activities. It assures that the policy of openness in all information matters, as enunciated by the Administrator, is honored in all respects. Develops publications to inform the general public of major EPA programs and activities; it also develops informational materials for internal EPA use in Headquarters and at the Regions, Labs and Field Offices. It maintains clearance systems and procedures for periodicals and nontechnical information developed by EPA for public distribution, and reviews all publications for public affairs interests. The Office of Public Affairs provides policy direction for, and coordination and oversight of EPA's community relations program. It provides a system for ensuring that EPA educates citizens and responds to their concerns about all environmental issues and assures that there are opportunities for public involvement in the resolution of problems. The Office supervises the production of audio-visual materials, including graphics, radio and video materials, for the general public and for internal audiences, in support of EPA policies and programs. The Office provides program direction and professional review of the performance of public affairs functions in the Regional Offices of EPA, as well as at laboratories and other field offices. The Office of Public Affairs is responsible for reviewing interagency agreements and Headquarters purchase request requisitions expected to result in contracts in the area of public information and community relations. It develops proposals and reviews Headquarters grant applications under consideration when public affairs goals are involved.

(c) *Office of Legislative Analysis.* The Office of Legislative Analysis, under the supervision of a Director who serves in the capacity of Legislative Counsel, is responsible for legislative drafting and liaison activities relating to the Agency's programs. It exercises responsibility for legislative drafting; reports to the Office of Management and Budget and congressional committees on proposed legislation and pending and enrolled bills, as required by OMB Circular No. A–19 and Bulletin No. 72–6; provides testimony on legislation and other matters before congressional committees; and reviews transcripts of legislative hearings. It maintains liaison with the Office of Congressional Liaison on all Agency activities of interest to the Congress. The Office works closely with the staffs of various Assistant Administrators, Associate Administrators, Regional Administrators, and Staff Office Directors in accordance with established Agency procedures, in the development of the Agency's legislative program. The Office assists the Assistant Administrator for External Affairs and the Agency's senior policy officials in guiding legislative initiatives through the legislative process. It advises the Assistant Administrator for Administration and Resources Management in matters pertaining to appropriations legislation. It works closely with the Office of Federal Activities to assure compliance with Agency procedures for the preparation of environmental impact statements, in relation to proposed legislation and reports on legislation. The Office coordinates with the Office of Management and Budget, other agencies, and congressional staff members on matters within its area of responsibility; and develops suggested State and local environmental legislative proposals, using inputs provided by other Agency components. The Legislative Reference Library provides legislative research services for the Agency. The Library secures and furnishes congressional materials to all EPA employees and, if available, to other Government agencies and private organizations; and it also provides the service of securing, upon request, EPA reports and materials for the Congress.

(d) *Office of Congressional Liaison.* The Office of Congressional Liaison is under the supervision of a Director who serves as the principal adviser to the Administrator with respect to congressional activities. All of the functions and responsibilities of the Director are Agencywide and apply to the provision of services with respect to all of the programs and activities of the Agency. The Office serves as the principal point of congressional contact with the Agency and maintains an effective liaison with the Congress on Agency activities of interest to the Congress and, as necessary, maintains liaison with Agency Regional and field officials, other Government agencies, and public and private groups having an interest in legislative matters affecting the Agency. It assures the provision of prompt response to the Congress on all inquiries relating to activities of the Agency; and monitors and coordinates the continuing operating contacts between the staff of the Office of the Comptroller and staff of the Appropriations Subcommittees of Congress.

(e) *Office of Community and Intergovernmental Relations.* The Office of Community and Intergovernmental Relations is under the supervision of a Director who serves as the principal point of contact with public interest groups representing general purpose State and local governments, and is the principal source of advice and information for the Administrator and the Assistant Administrator for External Affairs on intergovernmental relations. The Office maintains liaison on intergovernmental issues with the White House and Office of Management and Budget (OMB); identifies and seeks solutions to emerging intergovernmental issues; recommends and coordinates personal involvement by the Administrator and Deputy Administrator in relations with State, county, and local government officials; coordinates and assists Headquarters components in their handling of broad-gauged and issue-oriented intergovernmental problems. It works with the Regional Administrators and the Office of Regional Operations to encourage the adoption of improved methods for dealing effectively with State and local governments on specific EPA program initiatives; works with the Immediate Office of the Administrator, Office of Congressional Liaison, Office of Public Affairs, and the Regional Offices to develop and carry out a comprehensive liaison program; and tracks legislative initiatives which affect the Agency's intergovernmental relations. It advises and supports the Office Director in implementing the President's Environmental Youth Awards program.

[50 FR 26721, June 28, 1985, as amended at 52 FR 30359, Aug. 14, 1987]

§ 1.39 Office of Policy, Planning and Evaluation.

The Assistant Administrator for Policy, Planning and Evaluation services as principal adviser to the Administrator on Agency policy and planning issues and as such is responsible for supervision and management of the following: Policy analysis; standards and regulations; and management strategy and evaluation. The Assistant Administrator represents the Administrator with Congress and the Office of Management and Budget, and other Federal agencies prescribing requirements for conduct for Government management activities.

(a) *Office of Policy Analysis.* The Office of Policy Analysis is under the supervision of a Director who performs the following functions on an Agencywide basis: economic analysis of Agency programs, policies, standards, and regulations, including the estimation of abatement costs; research into developing new benefits models; benefit-cost analyses; impact assessments; intermediate and long-range strategic studies; consultation and analytical assistance in the areas described above to senior policy and program officials and other offices in the Agency; development and coordination proposals for major new Agency initiatives; liaison with other agencies; universities, and interest groups on major policy issues and development of a coordinated Agency position; and development of integrated pollution control strategies for selected industrial and geographical areas.

(b) *Office of Standards and Regulations.* The Office of Standards and Regulations is under the supervision of a

Director who is responsible for: involving the Office of Policy, Planning and Evaluation (OPPE) in regulatory review; conducting technical and statistical analyses of proposed standards, regulations and guidelines; serving as the Agency focal point for identifying, developing and implementing alternatives to conventional ''command and control'' regulations; conducting analyses of Agency activities related to chemical substances and providing mechanisms for establishing regulatory priorities and resolving scientific issues affecting rulemaking; ensuring Agency compliance with the Paperwork Reduction Act; evaluating and reviewing all Agency information collection requests and activities, and, in cooperation with the Office of Administration and Resources Management and the Office of Management Systems and Evaluation, evaluating Agency management and uses of data for decision-making.

(c) *Office of Management Systems and Evaluation.* The Office of Management Systems and Evaluation is under the supervision of a Director who directs and coordinates the development, implementation and administration of Agencywide systems for planning, tracking, and evaluating the accomplishments of Agency programs. In consultation with other offices, the Office develops a long-range policy framework for Agency goals, and objectives, identifies strategies for achieving goals, establishes timetables for objectives, and ensures that programs are evaluated against their accomplishments of goals.

§ 1.41 Office of Air and Radiation.

The Office of Air and Radiation is under supervision of the Assistant Administrator for Air and Radiation who serves as principal adviser to the Administrator in matters pertaining to air and radiation programs, and is responsible for the management of these EPA programs: Program policy development and evaluation; environmental and pollution sources' standards development; enforcement of standards; program policy guidance and overview, technical support or conduct of compliance activities and evaluation of Regional air and radiation program activities; development of programs for technical assistance and technology transfer; and selected demonstration programs.

(a) *Office of Mobile Sources.* The Office of Mobile Sources, under the supervision of a Director, is responsible for the mobile source air pollution control functions of the Office of Air and Radiation. The Office is responsible for: Characterizing emissions from mobile sources and related fuels; developing programs for their control, including assessment of the status of control technology and in-use vehicle emissions; for carrying out, in coordination with the Office of Enforcement and Compliance Monitoring as appropriate, a regulatory compliance program to ensure adherence of mobile sources to standards; and for fostering the development of State motor vehicles emission inspection and maintenance programs.

(b) *Office of Air Quality Planning and Standards.* The Office of Air Quality Planning and Standards, under the supervision of a Director, is responsible for the air quality planning and standards functions of the Office of Air and Radiation. The Director for Air Quality Planning and Standards is responsible for emission standards for new stationary sources, and emission standards for hazardous pollutants; for developing national programs, technical policies, regulations, guidelines, and criteria for air pollution control; for assessing the national air pollution control program and the success in achieving air quality goals; for providing assistance to the States, industry and other organizations through personnel training activities and technical information; for providing technical direction and support to Regional Offices and other organizations; for evaluating Regional programs with respect to State implementation plans and strategies, technical assistance, and resource requirements and allocations for air related programs; for developing and maintaining a national air programs data system, including air quality, emissions and other technical data; and for providing effective technology transfer through the translation of technological developments into improved control program procedures.

(c) *Office of Radiation Programs.* The Office of Radiation Programs, under the supervision of a Director, is responsible to the Assistant Administrator for Air and Radiation for the radiation activities of the Agency, including development of radiation protection criteria, standards, and policies; measurement and control of radiation exposure; and research requirements for radiation programs. The Office provides technical assistance to States through EPA Regional Offices and other agencies having radiation protection programs; establishes and directs a national surveillance and investigation program for measuring radiation levels in the environment; evaluates and assesses the impact of radiation on the general public and the environment; and maintains liaison with other public and private organizations involved in environmental radiation protection activities. The Office coordinates with and assists the Office of Enforcement and Compliance Monitoring in enforcement activities where EPA has jurisdiction. The Office provides editorial policy and guidance, and assists in preparing publications.

§ 1.43 Office of Prevention, Pesticides and Toxic Substances.

The Assistant Administrator serves as the principal adviser to the Administrator in matters pertaining to assessment and regulation of pesticides and toxic substances and is responsible for managing the Agency's pesticides and toxic substances programs under the Federal Insecticide, Fungicide, and Rodenticide Act (FIFRA); the Federal Food, Drug, and Cosmetic Act; the Toxic Substances Control Act (TSCA); and for promoting coordination of all Agency programs engaged in toxic substances activities. The Assistant Administrator has responsibility for establishing Agency strategies for implementation and integration of the pesticides and the toxic substances programs under applicable Federal statutes; developing and operating Agency programs and policies for assessment and control of pesticides and toxic substances; developing recommendations for Agency priorities for research, monitoring, regulatory, and information-gathering activities relating to pesticides and toxic substances; developing scientific, technical, economic, and social data bases for the conduct of hazard assessments and evaluations in support of toxic substances and pesticides activities; directing pesticides and toxic substances compliance programs; providing toxic substances and pesticides program guidance to EPA Regional Offices; and monitoring, evaluating, and assessing pesticides and toxic substances program operations in EPA Headquarters and Regional Offices.

(a) *Office of Pesticide Programs.* The Office of Pesticide Programs, under the management of a Director and Deputy Director are responsible to the Assistant Administrator for leadership of the overall pesticide activities of the Agency under the authority of the Federal Insecticide, Fungicide, and Rodenticide Act and several provisions of the Federal Food, Drug, and Cosmetic Act, including the development of strategic plans for the control of the national environmental pesticide situation. Such plans are implemented by the Office of Pesticide Programs, other EPA components, other Federal agencies, or by State, local, and private sectors. The Office is also responsible for establishment of tolerance levels for pesticide residues which occur in or on food; registration and reregistration of pesticides; special review of pesticides suspected of posing unreasonable risks to human health or the environment; monitoring of pesticide residue levels in food, humans, and nontarget fish and wildlife; preparation of pesticide registration guidelines; development of standards for the registration and reregistration of pesticide products; provision of program policy direction to technical and manpower training activities in the pesticides area; development of research needs and monitoring requirements for the pesticide program and related areas; review of impact statements dealing with pesticides; and carrying out of assigned international activities.

(b) *Office of Pollution Prevention and Toxics.* The Office of Pollution Prevention and Toxics (OPPT), under the management of a Director and Deputy Director is responsible to the Assistant Administrator for those activities of

the Agency mandated by the Toxic Substances Control Act. The Director is responsible for developing and operating Agency programs and policies for new and existing chemicals. In each of these areas, the Director is responsible for information collection and coordination; data development; health, environmental and economic assessment; and negotiated or regulatory control actions. The Director provides operational guidance to EPA Regional Offices, reviews and evaluates toxic substances activities at EPA Headquarters and Regional Offices; coordinates TSCA activities with other EPA offices and Federal and State agencies, and conducts the export notification required by TSCA and provides information to importers. The Director is responsible for developing policies and procedures for the coordination and integration of Agency and Federal activities concerning toxic substances. The Director is also responsible for coordinating communication with the industrial community, environmental groups, and other interested parties on matters relating to the implementation of TSCA; providing technical support to international activities managed by the Office of International Activities; and managing the joint planning of toxic research and development under the auspices of the Pesticides/Toxic Substances Research Committee.

(c) *Office of Compliance Monitoring.* The Office of Compliance Monitoring, under the supervision of a Director, plans, directs, and coordinates the pesticides and toxic substances compliance programs of the Agency. More specifically, the Office provides a national pesticides and toxic substances compliance overview and program policy direction to the Regional Offices and the States, prepares guidance and policy on compliance issues, establishes compliance priorities, provides technical support for litigation activity, concurs on enforcement actions, maintains liaison with the National Enforcement Investigations Center, develops annual fiscal budgets for the national programs, and manages fiscal and personnel resources for the Headquarters programs. The Office directs and manages the Office of Prevention, Pesticides and Toxic Substances' laboratory data integrity program which conducts laboratory inspections and audits of testing data. The Office issues civil administrative complaints and other administrative orders in cases of first impression, overriding national significance, or violations by any entity located in more than one Region. The office coordinates with the Office of General Counsel and the Office of Enforcement and Compliance Monitoring in an attorney-client relationship, with those Offices providing legal support for informal and formal administrative resolutions of violations; for conducting litigation; for interpreting statutes, regulations and other legal precedents covering EPA's activities; and for advising program managers on the legal implications of alternative courses of action. The Office of Compliance Monitoring coordinates with the Office of Pesticide Programs in the conduct of pesticide enforcement compliance and registration programs under the Federal Insecticide, Fungicide, and Rodenticide Act and participates in decisions involving the cancellation or suspension of registration. The Office establishes policy and operating procedures for pesticide compliance activities including sampling programs, export certification, monitoring programs to assure compliance with experimental use permits, pesticide use restrictions, and recordkeeping requirements, and determines when and whether compliance actions are appropriate. The Office establishes policy and guidance for the State cooperative enforcement agreement program and the applicator training and certification program. The Office of Compliance Monitoring also coordinates with the Office of Pollution Prevention and Toxics in the conduct of regulatory and compliance programs under the Toxic Substances Control Act and participates in regulation development for TSCA. The Office participates in the control of imminent hazards under TSCA, inspects facilities subject to TSCA regulation as a part of investigations which are national in scope or which require specialized expertise, and samples and analyzes chemicals to determine compliance with TSCA. The Office coordinates and

provides guidance to other TSCA compliance activities, including the State cooperative enforcement agreement program and the preparation of administrative suits.

[50 FR 26721, June 28, 1985, as amended at 57 FR 28087, June 24, 1992]

§ 1.45 Office of Research and Development.

The Office of Research and Development is under the supervision of the Assistant Administrator for Research and Development who serves as the principal science adviser to the Administrator, and is responsible for the development, direction, and conduct of a national research, development and demonstration program in: Pollution sources, fate, and health and welfare effects; pollution prevention and control, and waste management and utilization technology; environmental sciences; and monitoring systems. The Office participates in the development of Agency policy, standards, and regulations and provides for dissemination of scientific and technical knowledge, including analytical methods, monitoring techniques, and modeling methodologies. The Office serves as coordinator for the Agency's policies and programs concerning carcinogenesis and related problems and assures appropriate quality control and standardization of analytical measurement and monitoring techniques utilized by the Agency. The Office exercises review and concurrence responsibilities on an Agencywide basis in all budgeting and planning actions involving monitoring which require Heardquarters approval.

(a) *Office of Acid Deposition, Environmental Monitoring and Quality Assurance.* The Office of Acid Deposition, Environmental Monitoring and Quality Assurance (OADEMQA), under the supervision of an Office Director, is responsible for planning, managing and evaluating a comprehensive program for:

(1) Monitoring the cause and effects of acid deposition;

(2) Research and development on the causes, effects and corrective steps for the acid deposition phenomenon;

(3) Research with respect to the transport and fate of pollutants which are released into the atmosphere;

(4) Development and demonstration of techniques and methods to measure exposure and to relate ambient concentrations to exposure by critical receptors;

(5) Research, development and demonstration of new monitoring methods, systems, techniques and equipment for detection, identification and characterization of pollutants at the source and in the ambient environment and for use as reference or standard monitoring methods;

(6) Establishment, direction and coordination of Agencywide Quality Assurance Program; and

(7) Development and provision of quality assurance methods, techniques and material including validation and standardization of analytical methods, sampling techniques, quality control methods, standard reference materials, and techniques for data collection, evaluation and interpretation. The Office identifies specific research, development, demonstration and service needs and priorities; establishes program policies and guidelines; develops program plans including objectives and estimates of resources required to accomplish objectives; administers the approved program and activities; assigns program responsibility and resources to the laboratories assigned by the Assistant Administrator; directs and supervises assigned laboratories in program administration; and conducts reviews of program progress and takes action as necessary to assure timeliness, quality and responsiveness of outputs.

(b) *Office of Environmental Engineering and Technology Demonstration.* The Office of Environmental Engineering and Technology Demonstration (OEETD) under the supervision of a Director, is responsible for planning, managing, and evaluating a comprehensive program of research, development, and demonstration of cost effective methods and technologies to:

(1) Control Environmental impacts associated with the extraction, processing, conversion, and transportation of energy, minerals, and other resources, and with industrial processing and manufacturing facilities;

(2) Control environmental impacts of public sector activities including publicly-owned waste water and solid waste facilities;

(3) Control and manage hazardous waste generation, storage, treatment, and disposal;

(4) Provide innovative technologies for response actions under Superfund and technologies for control of emergency spills of oils and hazardous waste;

(5) Improve drinking water supply and system operations, including improved understanding of water supply technology and water supply criteria;

(6) Characterize, reduce, and mitigate indoor air pollutants including radon; and

(7) Characterize, reduce, and mitigate acid rain precursors from stationary sources. Development of engineering data needed by the Agency in reviewing premanufacturing notices relative to assessing potential release and exposure to chemicals, treatability by waste treatment systems, containment and control of genetically engineered organisms, and development of alternatives to mitigate the likelihood of release and exposure to existing chemicals. In carrying out these responsibilities, the Office develops program plans and manages the resources assigned to it; implements the approved programs and activities; assigns objectives and resources to the OEETD laboratories; conducts appropriate reviews to assure the quality, timeliness, and responsiveness of outputs; and conducts analyses of the relative environmental and socioeconomic impacts of engineering methods and control technologies and strategies. The Office of Environmental Engineering and Technology Demonstration is the focal point within the Office of Research and Development for providing liaison with the rest of the Agency and with the Department of Energy on issues associated with energy development. The Office is also the focal point within the Office of Research and Development for liaison with the rest of the Agency on issues related to engineering reseach and development and the control of pollution discharges.

(c) *Office of Environmental Processes and Effects Research*. The Office of Environmental Processes and Effects Research, under the supervision of the Director, is responsible for planning, managing, and evaluating a comprehensive research program to develop the scientific and technological methods and data necessary to understand ecological processes, and predict broad ecosystems impacts, and to manage the entry, movement, and fate of pollutants upon nonhuman organisms and ecosystems. The comprehensive program includes:

(1) The development of organism and ecosystem level effect data needed for the establishment of standards, criteria or guidelines for the protection of nonhuman components of the environment and ecosystems integrity and the prevention of harmful human exposure to pollutants;

(2) The development of methods to determine and predict the fate, transport, and environmental levels which may result in human exposure and exposure of nonhuman components of the environment, resulting from the discharge of pollutants, singly or in combination into the environment, including development of source criteria for protection of environmental quality;

(3) The development and demonstration of methods for the control or management of adverse environmental impacts from agriculture and other rural nonprofit sources;

(4) The development and demonstration of integrated pest management strategies for the management of agriculture and urban pests which utilize alternative biological, cultural and chemical controls;

(5) The development of a laboratory and fieldscale screening tests to provide data that can be used to predict the behavior of pollutants in terms of movement in the environmental, accumulation in the food chain, effects on organisms, and broad escosystem impacts;

(6) Coordination of interagency research activities associated with the health and environmental impacts of energy production and use; and

(7) development and demonstration of methods for restoring degraded ecosystem by means other than source control.

(d) *Office of Health Research.* The Office of Health Research under the supervision of a Director, is responsible for the management of planning, implementing, and evaluating a comprehensive, integrated human health research program which documents acute and chronic adverse effects to man from environmental exposure to pollutants and determines those exposures which have a potentially adverse effect on humans. This documentation is utilized by ORD for criteria development and scientific assessments in support of the Agency's regulating and standard-setting activities. To attain this objective, the program develops tests systems and associated methods and protocols, such as predictive models to determine similarities and differences among test organisms and man; develops methodology and conducts laboratory and field research studies; and develops interagency programs which effectively use pollutants. The Office of Health Research is the Agency's focal point within the Office of Research and Development for providing liaison relative to human health effects and related human exposure issues (excluding issues related to the planning and implementation of research on the human health effects of energy pollutants that is conducted under the Interagency Energy/Environment Program). It responds with recognized authority to changing requirements of the Regions, program offices and other offices for priority technical assistance. In close coordination with Agency research and advisory committees, other agencies and offices, and interaction with academic and other independent scientific bodies, the Office develops health science policy for the Agency. Through these relationships and the scientific capabilities of its laboratories and Headquarters staffs, the Office provides a focal point for matters pertaining to the effects of human exposure to environmental pollutants.

(e) *Office of Health and Environmental Assessment (OHEA).* The Office of Health and Environmental Assessment, under the supervision of a Director, is the principal adviser on matters relating to the development of health criteria, health affects assessment and risk estimation, to the Assistant Administrator for Research and Development. The Director's Office: Develops recommendations on OHEA programs including the identification and development of alternative program goals, priorities, objectives and work plans; develops recommendations on overall office policies and means for their implementation; performs the critical path planning necessary to assure a timely production of OHEA information in response to program office needs; serves as an Agency health assessment advocate for issue resolution and regulatory review in the Agency Steering Committee, Science Advisory Board, and in cooperation with other Federal agencies and the scientific and technical community; and provides administrative support services to the components of OHEA. The Director's Office provides Headquarters coordination for the Environmental Criteria and Assessment Offices.

(f) *Office of Exploratory Research.* The Office of Exploratory Research (OER), under the supervision of a Director, is responsible for overall planning, administering, managing, and evaluating EPA's anticipatory and extramural grant research in response to Agency priorities, as articulated by Agency planning mechanisms and ORD's Research Committees. The Director advises the Assistance Administrator on the direction, scientific quality and effectiveness of ORD's long-term scientific review and evaluation; and research funding assistance efforts. The responsibilities of this office include: Administering ORD's scientific review of extramural requests for research funding assistance; developing research proposal solicitations; managing grant projects; and ensuring project quality and optimum dissemination of results. The OER is responsible for analyzing EPA's long-range environmental research concerns; forecasting emerging and potential environmental problems and manpower needs; identifying Federal workforce training programs to be used by State and local governments; assuring the participation of minority institutions in environmental research and development activities; and conducting special studies in response to high priority national environmental

needs and problems. This office serves as an ORD focal point for university relations and other Federal research and development agencies related to EPA's extramural research program.

[50 FR 26721, June 28, 1985, as amended at 52 FR 30360, Aug. 14, 1987]

§ 1.47 Office of Solid Waste and Emergency Response.

The Office of Solid Waste and Emergency Response (OSWER), under the supervision of the Assistant Administrator for Solid Waste and Emergency Response, provides Agencywide policy, guidance, and direction for the Agency's solid and hazardous wastes and emergency response programs. This Office has primary responsibility for implementing the Resource Conservation and Recovery Act (RCRA) and the Comprehensive Environmental Response, Compensation and Liability Act (CERCLA—''Superfund''). In addition to managing those programs, the Assistant Administrator serves as principal adviser to the Administrator in matters pertaining to them. The Assistant Administrator's responsibilities include: Program policy development and evaluation; development of appropriate hazardous waste standards and regulations; ensuring compliance with applicable laws and regulations; program policy guidance and overview, technical support, and evaluation of Regional solid and hazardous wastes and emergency response activities; development of programs for technical, programmatic, and compliance assistance to States and local governments; development of guidelines and standards for the land disposal of hazardous wastes; analyses of the recovery of useful energy from solid waste; development and implementation of a program to respond to uncontrolled hazardous waste sites and spills (including oil spills); long-term strategic planning and special studies; economic and long-term environmental analyses; economic impact assessment of RCRA and CERCLA regulations; analyses of alternative technologies and trends; and cost-benefit analyses and development of OSWER environmental criteria.

(a) *Office of Waste Programs Enforcement.* The Office of Waste Programs Enforcement (OWPE), under the supervision of a Director, manages a national program of technical compliance and enforcement under CERCLA and RCRA. The Office provides guidance and support for the implementation of the CERCLA and RCRA compliance and enforcement programs. This includes the development of program strategies, long-term and yearly goals, and the formulation of budgets and plans to support implementation of strategies and goals. The Office provides program guidance through the development and issuance of policies, guidance and other documents and through training and technical assistance. The Office oversees and supports Regions and States in the implementation of the CERCLA and RCRA enforcement programs. The Office may assume responsibility for direct management of a limited number of CERCLA and RCRA enforcement actions which are multi-regional in nature or are cases of national significance. The Office serves as the national technical expert for all matters relating to CERCLA and RCRA compliance and enforcement. It represents the interest of the CERCLA and RCRA enforcement programs to other offices of the Agency. In coordination with the Office of External Affairs (OEA) and IO–OSWER, represents the program to external organizations, including the Office of Management and Budget (OMB), Congress, U.S. Department of Justice and other Federal agencies, the media, public interest and industry groups, State and local governments and their associations and the public.

(b) *Office of Solid Waste.* The Office of Solid Waste, under the supervision of a Director, is responsible for the solid and hazardous waste activities of the Agency. In particular, this Office is responsible for implementing the Resource Conservation and Recovery Act. The Office provides program policy direction to and evaluation of such activities throughout the Agency and establishes solid and hazardous wastes research requirements for EPA.

(c) *Office of Emergency and Remedial Response.* The Office of Emergency and Remedial Response, under the supervision of a Director, is responsible for the emergency and remedial response functions of the Agency (i.e.,

CERCLA). The Office is specifically responsible for:

(1) Developing national strategy, programs, technical policies, regulations, and guidelines for the control of abandoned hazardous waste sites, and response to and prevention of oil and hazardous substance spills;

(2) Providing direction, guidance, and support to the Environmental Response Teams and overseeing their activities;

(3) Providing direction, guidance, and support to the Agency's non-enforcement emergency and remedial response programs, including emergency and remedial responses to hazardous waste sites;

(4) Developing national accomplishment plans and resources;

(5) Scheduling the guidelines for program plans;

(6) Assisting in the training of personnel;

(7) Monitoring and evaluating the performance, progress, and fiscal status of the Regions in implementing emergency and remedial response program plans;

(8) Maintaining liaison with concerned public and private national organizations for emergency response;

(9) Supporting State emergency response programs; and

(10) Coordinating Office activities with other EPA programs.

(d) *Office of Underground Storage Tanks.* The Office of Underground Storage Tanks, under the supervision of a Director, is responsible for defining, planning, and implementing regulation of underground storage tanks containing petroleum, petroleum products, and chemical products. In particular, this Office is responsible for overseeing implementation of Subtitle I of the Resource Conservation and Recovery Act (RCRA), as amended. The Office develops and promulgates regulations and policies including notification, tank design and installation, corrective action, and State program approvals. It also plans for an oversees utilization of the Underground Storage Tank Trust Fund established by the Superfund Amendments and Reauthorization Act of 1986 (SARA).

[50 FR 26721, June 28, 1985, as amended at 52 FR 30360, Aug. 14, 1987]

§ 1.49 Office of Water.

The Office of Water, under the supervision of the Assistant Administrator for Water who serves as the principal adviser to the Administrator in matters pertaining to water programs, is responsible for management of EPA's water programs. Functions of the Office include program policy development and evaluation; environmental and pollution source standards development; program policy guidance and overview; technical support; and evaluation of Regional water activities; the conduct of compliance and permitting activities as they relate to drinking water and water programs; development of programs for technical assistance and technology transfer; development of selected demonstration programs; economic and long-term environmental analysis; and marine and estuarine protection.

(a) *Office of Water Enforcement and Permits.* The Office of Water Enforcement and Permits, under the supervision of a Director, develops policies, strategies, procedures and guidance for EPA and State compliance monitoring, evaluation, and enforcement programs for the Clean Water Act and the Marine Protection Research and Sanctuaries Act. The Office also provides national program direction to the National Pollutant Discharge Elimination System permit program. The office has overview responsibilities and provides technical assistance to the regional activities in both enforcement and permitting programs.

(b) *Office of Water Regulations and Standards.* The Office of Water Regulations and Standards, under the supervision of a Director, is responsible for the Agency's water regulations and standards functions. The Office is responsible for developing an overall program strategy for the achievement of water pollution abatement in cooperation with other appropriate program offices. The Office assures the coordination of all national water-related activities within this water program strategy, and monitors national progress toward the achievement of water quality goals and is responsible for the development of effluent guidelines and water quality standards, and other pollutant standards, regulations,

and guidelines within the program responsibilities of the Office. It exercises overall responsibility for the development of effective State and Regional water quality regulatory control programs. The Office is responsible for the development and maintenance of a centralized water programs data system including compatible water quality, discharger, and program data files utilizing, but not displacing, files developed and maintained by other program offices. It is responsible for developing national accomplishment plans and resource and schedule guidelines for monitoring and evaluating the performance, progress, and fiscal status of the organization in implementing program plans. The Office represents EPA in activities with other Federal agencies concerned with water quality regulations and standards.

(c) *Office of Municipal Pollution Control.* The Office of Municipal Pollution Control, under the supervision of a Director, is responsible for the Agency's water program operations functions. The Office is responsible for developing national strategies, program and policy recommendations, regulations and guidelines for municipal water pollution control; for providing technical direction and support to Regional Offices and other organizations; and for evaluating Regional and State programs with respect to municipal point source abatement and control, and manpower development for water-related activities. The Office assures that priority Headquarters and regional activities are planned and carried out in a coordinated and integrated fashion, including developing and implementing data submission systems.

(d) *Office of Drinking Water.* The Office of Drinking Water, under the supervision of a Director, is responsible for water supply activities of the Agency, including the development of an implementation strategy which provides the national policy direction and coordination for the program. This Office develops regulations and guidelines to protect drinking water quality and existing and future underground sources of drinking water, develops program policy and guidance for enforcement and compliance activities, and recommends policy for water supply protection activities. The office provides guidance and technical information to State agencies, local utilities, and Federal facilities through the Regional Offices on program planning and phasing; evaluates the national level of compliance with the regulations; plans and develops policy guidance for response to national, Regional, and local emergencies; reviews and evaluates, with Regional Offices, technical data for the designation of sole-source aquifers; designs a national program of public information; provides program policy direction for technical assistance and manpower training activities in the water supply area; identifies research needs and develops monitoring requirements for the national water supply program; develops national accomplishments' plans and resource schedule guidelines for monitoring and evaluating the program plans, and program performance, and fiscal status; develops program plans, and budget and program status reports for the water supply program; coordinates water supply activities with other Federal agencies as necessary; and serves as liaison with the National Drinking Water Advisory Council.

(e) *Office of Ground-Water Protection.* The Office of Ground-Water Protection, under the supervision of a Director, oversees implementation of the Agency's Ground-water Protection Strategy. This Office coordinates support of Headquarters and regional activities to develop stronger State government organizations and programs which foster ground-water protection. The Office directs and coordinates Agency analysis and approaches to unaddressed problems of ground-water contamination; is principally responsible for establishing and implementing a framework for decision-making at EPA on ground-water protection issues; and serves as the focus of internal EPA policy coordination for ground-water.

(f) *Office of Marine and Estuarine Protection.* The Office of Marine and Estuarine Protection, under the supervision of a Director, is responsible for the development of policies and strategies and implementation of a program to protect the marine/estuarine environment, including ocean dumping. The

Office provides national direction for the Chesapeake Bay and other estuarine programs, and policy oversight of the Great Lakes Program.

(g) *Office of Wetlands Protection*. The Office of Wetlands Protection, under the supervision of a Director, administers the 404/Wetlands Program and develops policies, procedures, regulations, and strategies addressing the maintenance, enhancement, and protection of the Nations Wetlands. The Office coordinates Agency issues related to wetlands.

[50 FR 26721, June 28, 1985, as amended at 52 FR 30360, Aug. 14, 1987]

Subpart C—Field Installations

§ 1.61 Regional Offices.

Regional Administrators are responsible to the Administrator, within the boundaries of their Regions, for the execution of the Regional Programs of the Agency and such other responsibilities as may be assigned. They serve as the Administrator's prinicipal representatives in their Regions in contacts and relationships with Federal, State, interstate and local agencies, industry, academic institutions, and other public and private groups. Regional Administrators are responsible for:

(a) Accomplishing national program objectives within the Regions as established by the Administrator, Deputy Administrator, Assistant Administrators, Associate Administrators, and Heads of Headquarters Staff Offices;

(b) Developing, proposing, and implementing approved Regional programs for comprehensive and integrated environmental protection activities;

(c) Total resource management in their Regions within guidelines provided by Headquarters;

(d) Conducting effective Regional enforcement and compliance programs;

(e) Translating technical program direction and evaluation provided by the various Assistant Administrators, Associate Administrators and Heads of Headquarters Staff Offices, into effective operating programs at the Regional level, and assuring that such programs are executed efficiently;

(f) Exercising approval authority for proposed State standards and implementation plans; and

(g) Providing for overall and specific evaluations of Regional programs, both internal Agency and State activities.

PART 2—PUBLIC INFORMATION

Subpart A—Requests for Information

Sec.
2.100 Definitions.
2.101 Policy on disclosure of EPA records.
2.102 [Reserved]
2.103 Partial disclosure of records.
2.104 Requests to which this subpart applies.
2.105 Existing records.
2.106 Where requests for agency records shall be filed.
2.107 Misdirected written requests; oral requests.
2.108 Form of request.
2.109 Requests which do not reasonably describe records sought.
2.110 Responsibilities of Freedom of Information Officers.
2.111 Action by office responsible for responding to request.
2.112 Time allowed for issuance of initial determination.
2.113 Initial denials of requests.
2.114 Appeals from initial denials; manner of making.
2.115 Appeal determinations; by whom made.
2.116 Contents of determination denying appeal.
2.117 Time allowed for issuance of appeal determination.
2.118 Exemption categories.
2.119 Discretionary release of exempt documents.
2.120 Fees; payment; waiver.
2.121 Exclusions.

Subpart B—Confidentiality of Business Information

2.201 Definitions.
2.202 Applicability of subpart; priority where provisions conflict; records containing more than one kind of information.
2.203 Notice to be included in EPA requests, demands, and forms; method of asserting business confidentiality claim; effect of failure to assert claim at time of submission.
2.204 Initial action by EPA office.
2.205 Final confidentiality determination by EPA legal office.
2.206 Advance confidentiality determinations.
2.207 Class determinations.

2.208 Substantive criteria for use in confidentiality determinations.
2.209 Disclosure in special circumstances.
2.210 Nondisclosure for reasons other than business confidentiality or where disclosure is prohibited by other statute.
2.211 Safeguarding of business information; penalty for wrongful disclosure.
2.212 Establishment of control offices for categories of business information.
2.213 Designation by business of addressee for notices and inquiries.
2.214 Defense of Freedom of Information Act suits; participation by affected business.
2.215 Confidentiality agreements.
2.216—2.300 [Reserved]
2.301 Special rules governing certain information obtained under the Clean Air Act.
2.302 Special rules governing certain information obtained under the Clean Water Act.
2.303 Special rules governing certain information obtained under the Noise Control Act of 1972.
2.304 Special rules governing certain information obtained under the Safe Drinking Water Act.
2.305 Special rules governing certain information obtained under the Solid Waste Disposal Act, as amended.
2.306 Special rules governing certain information obtained under the Toxic Substances Control Act.
2.307 Special rules governing certain information obtained under the Federal Insecticide, Fungicide and Rodenticide Act.
2.308 Special rules governing certain information obtained under the Federal Food, Drug and Cosmetic Act.
2.309 Special rules governing certain information obtained under the Marine Protection, Research and Sanctuaries Act of 1972.
2.310 Special rules governing certain information obtained under the Comprehensive Environmental Response, Compensation, and Liability Act of 1980, as amended.
2.311 Special rules governing certain information obtained under the Motor Vehicle Information and Cost Savings Act.

Subpart C—Testimony by Employees and Production of Documents in Civil Legal Proceedings Where the United States Is Not a Party

2.401 Scope and purpose.
2.402 Policy on presentation of testimony and production of documents.
2.403 Procedures when voluntary testimony is requested.
2.404 Procedures when an employee is subpoenaed.
2.405 Subpoenas duces tecum.
2.406 Requests for authenticated copies of EPA documents.

AUTHORITY: 5 U.S.C. 301, 552 (as amended), 553; secs. 114, 205, 208, 301, and 307, Clean Air Act, as amended (42 U.S.C. 7414, 7525, 7542, 7601, 7607); secs. 308, 501 and 509(a), Clean Water Act, as amended (33 U.S.C. 1318, 1361, 1369(a)); sec. 13, Noise Control Act of 1972 (42 U.S.C. 4912); secs. 1445 and 1450, Safe Drinking Water Act (42 U.S.C. 300j–4, 300j–9); secs. 2002, 3007, and 9005, Solid Waste Disposal Act, as amended (42 U.S.C. 6912, 6927, 6995); secs. 8(c), 11, and 14, Toxic Substances Control Act (15 U.S.C. 2607(c), 2610, 2613); secs. 10, 12, and 25, Federal Insecticide, Fungicide, and Rodenticide Act, as amended (7 U.S.C. 136h, 136j, 136w); sec. 408(f), Federal Food, Drug and Cosmetic Act, as amended (21 U.S.C. 346(f)); secs. 104(f) and 108, Marine Protection Research and Sanctuaries Act of 1972 (33 U.S.C. 1414(f), 1418); secs. 104 and 115, Comprehensive Environmental Response, Compensation, and Liability Act of 1980, as amended (42 U.S.C. 9604 and 9615); sec. 505, Motor Vehicle Information and Cost Savings Act, as amended (15 U.S.C. 2005).

SOURCE: 41 FR 36902, Sept. 1, 1976, unless otherwise noted.

Subpart A—Requests for Information

§ 2.100 Definitions.

For the purposes of this part:

(a) *EPA* means the United States Environmental Protection Agency.

(b) *EPA Record* or, simply *record* means any document, writing, photograph, sound or magnetic recording, drawing, or other similar thing by which information has been preserved, from which the information can be retrieved and copied, and over which EPA has possession or control. It may include copies of the records of other Federal agencies (see §2.111(d)). The term includes informal writings (such as drafts and the like), and also includes information preserved in a form which must be translated or deciphered by machine in order to be intelligible to humans. The term includes documents and the like which were created or acquired by EPA, its predecessors, its officers, and its employees by use of Government funds or in the course of transacting official business. However, the term does not include materials which are the personal records of an EPA officer or employee. Nor does the

term include materials published by non-Federal organizations which are readily available to the public, such as books, journals, and periodicals available through reference libraries, even if such materials are in EPA's possession.

(c) *Request* means a request to inspect or obtain a copy of one or more records.

(d) *Requestor* means any person who has submitted a request to EPA.

(e) The term *commercial use request* refers to a request from or on behalf of one who seeks information for a use or purpose that furthers the commercial, trade or profit interests of the requestor or the person on whose behalf the request is made. In determining whether a requestor properly belongs in this category, EPA must determine the use to which a requestor will put the documents requested. Moreover, where EPA has reasonable cause to doubt the use to which a requestor will put the records sought, or where that use is not clear from the request itself, EPA may seek additional clarification before assigning the request to a specific category.

(f) The term *non-commercial scientific institution* refers to an institution that is not operated on a *commercial* basis as that term is referenced in paragraph (e) of this section, and which is operated solely for the purpose of conducting scientific research the results of which are not intended to promote any particular product or industry.

(g) The term *educational institution* refers to a preschool, a public or private elementary or secondary school, an institution of graduate higher education, an institution of undergraduate higher education, an institution or professional education, and an institution of vocational education, which operates a program or programs of scholarly research.

(h) The term *representative of the news media* refers to any person actively gathering news for an entity that is organized and operated to publish or broadcast news to the public. The term *news* means information that is about current events or that would be of current interest to the public. Examples of news media entities include television or radio stations broadcasting to the public at large, and publishers of periodicals (but only in those instances when they can qualify as disseminators of *news*) who make their products available for purchase or subscription by the general public. These examples are not intended to be all-inclusive. Moreover, as traditional methods of news delivery evolve (e.g., electronic dissemination of newspapers through telecommunications services), such alternative media would be included in this category. In the case of *freelance* journalists, they may be regarded as working for a news organization if they can demonstrate a solid basis for expecting publication through that organization, even though not actually employed by it. A publication contract would be the clearest proof, but EPA may also look to the past publication record of a requestor in making this determination.

(i) The term *search* includes all time spent looking for material that is responsive to a request, including page-by-page or line-by-line identification of material within documents. Searching for material must be done in the most efficient and least expensive manner so as to minimize costs for both the EPA and the requestor. For example, EPA will not engage in line-by-line search when merely duplicating an entire document would prove the less expensive and quicker method of complying with a request. *Search* will be distinguished, moreover, from *review* of material in order to determine whether the material is exempt from disclosure (see paragraph (j) of this section). Searches may be done manually or by computer using existing programming.

(j) The term *review* refers to the process of examining documents located in response to a request that is for a commercial use (see paragraph (e) of this section) to determine whether any portion of any document located is permitted to be withheld. It also includes processing any documents for disclosure, e.g., doing all that is necessary to excise them and otherwise prepare them for release. Review does not include time spent resolving legal or policy issues regarding the application of exemptions. (Documents must be reviewed in responding to all requests; however, review time may only be

charged to Commercial Use Requesters.)

(k) The term *duplication* refers to the process of making a copy of a document necessary to respond to an FOIA request. Such copies can take the form of paper copy, microform, audio-visual materials, or machine readable documentation (e.g., magnetic tape or disk), among others. The copy provided must be in a form that is reasonably usable by requesters.

[41 FR 36902, Sept. 1, 1976, as amended at 50 FR 51658, Dec. 18, 1985; 53 FR 216, Jan. 5, 1988]

§ 2.101 Policy on disclosure of EPA records.

(a) EPA will make the fullest possible disclosure of records to the public, consistent with the rights of individuals to privacy, the rights of persons in business information entitled to confidential treatment, and the need for EPA to promote frank internal policy deliberations and to pursue its official activities without undue disruption.

(b) All EPA records shall be available to the public unless they are exempt from the disclosure requirements of 5 U.S.C 552.

(c) All nonexempt EPA records shall be available to the public upon request regardless of whether any justification or need for such records has been shown by the requestor.

(d) When documents responsive to a request are maintained for distribution by agencies operating statutory-based fee schedule programs, such as, but not limited to, the Government Printing Office or the National Technical Information Service, EPA will inform the requester of the steps necessary to obtain records from the sources.

[41 FR 36902, Sept. 1, 1976, as amended at 53 FR 216, Jan. 5, 1988]

§ 2.102 [Reserved]

§ 2.103 Partial disclosure of records.

If a requested record contains both exempt and nonexempt material, the nonexempt material shall be disclosed, after the exempt material has been deleted in accordance with § 2.119.

§ 2.104 Requests to which this subpart applies.

(a) This subpart applies to any written request (other than a request made by another Federal agency) received by any EPA office, whether or not the request cites the Freedom of Information Act, 5 U.S.C. 552. See §§ 2.107(a) and 2.112(b) regarding the treatment of requests which are directed by the requestor to offices other than those listed in § 2.106.

(b) Any written request to EPA for existing records prepared by EPA for routine public distribution, e.g., pamphlets, copies of speeches, press releases, and educational materials, shall be honored. No individual determination under § 2.111 is necessary in such cases, since preparation of the records for routine public distribution itself constitutes a determination that the records are available to the public.

§ 2.105 Existing records.

(a) The Freedom of Information Act, 5 U.S.C. 552, does not require the creation of new records in response to a request, nor does it require EPA to place a requestor's name on a distribution list for automatic receipt of certain kinds of records as they come into existence. The Act establishes requirements for disclosure of existing records.

(b) All existing EPA records are subject to routine destruction according to standard record retention schedules.

§ 2.106 Where requests for agency records shall be filed.

(a) A request for records may be filed with the EPA Freedom of Information Officer, A–101, 401 M Street, SW., Washington, DC 20460.

(b) Should the requestor have reason to believe that the records sought may be located in an EPA regional office, he may transmit his request to the appropriate regional Freedom of Information Office indicated below:

(1) Region I (Massachusetts, Connecticut, Maine, New Hampshire, Rhode Island, Vermont):

U.S. Environmental Protection Agency, Freedom of Information Officer, Room 2303, John F. Kennedy Federal Building, Boston, MA 02203.

(2) Region II (New Jersey, New York, Puerto Rico, Virgin Islands):

U.S. Environmental Protection Agency, Freedom of Information Officer, Room 1005, 26 Federal Plaza, New York, NY 10007.

(3) Region III (Delaware, Maryland, Pennsylvania, Virginia, West Virginia, District of Columbia):

U.S. Environmental Protection Agency, Freedom of Information Officer, 841 Chestnut Street, Philadelphia, PA 19107.

(4) Region IV (Alabama, Florida, Georgia, Kentucky, Mississippi, North Carolina, South Carolina, Tennessee):

U.S. Environmental Protection Agency, Freedom of Information Officer, 345 Courtland Street, NE., Atlanta, GA 30365.

(5) Region V (Illinois, Indiana, Michigan, Minnesota, Ohio, Wisconsin);

U.S. Environmental Protection Agency, Freedom of Information Officer, 230 Dearborn Street, Chicago, IL 60604.

(6) Region VI (Arkansas, Louisiana, New Mexico, Oklahoma, Texas):

U.S. Environmental Protection Agency, Freedom of Information Officer (6M–MC), 1201 Elm Street, Dallas, TX 75270.

(7) Region VII (Iowa, Kansas, Missouri, Nebraska):

U.S. Environmental Protection Agency, Freedom of Information Officer, 726 Minnesota Avenue, Kansas City, KS 66101.

(8) Region VIII (Colorado, Montana, North Dakota, South Dakota, Utah, Wyoming):

U.S. Environmental Protection Agency, Freedom of Information Officer, One Denver Place, 999 18th Street, Suite 1300, Denver, CO 80202–2413.

(9) Region IX (Arizona, California, Hawaii, Nevada, American Samoa, Guam, Trust Territory of Pacific Islands):

U.S. Environmental Protection Agency, Freedom of Information Officer, 215 Fremont Street, San Francisco, CA 94105.

(10) Region X (Alaska, Idaho, Oregon, Washington):

U.S. Environmental Protection Agency, Freedom of Information Officer, 1200 Sixth Avenue, Seattle, WA 98101.

[41 FR 36902, Sept. 1, 1976, as amended at 50 FR 51659, Dec. 18, 1985]

§2.107 Misdirected written requests; oral requests.

(a) EPA cannot assure that a timely or satisfactory response under this subpart will be given to written requests that are addressed to EPA offices, officers, or employees other than the Freedom of Information Officers listed in §2.106. Any EPA officer or employee who receives a written request for inspection or disclosure of EPA records shall promptly forward a copy of the request to the appropriate Freedom of Information Officer, by the fastest practicable means, and shall, if appropriate, commence action under §2.111. For purposes of §2.112, the time allowed with respect to initial determinations shall be computed from the day on which the appropriate Freedom of Information Officer receives the request.

(b) While EPA officers and employees will attempt in good faith to comply with requests for inspection or disclosure of EPA records made orally, by telephone or otherwise, such oral requests are not required to be processed in accordance with this subpart.

[41 FR 36902, Sept. 1, 1976, as amended at 50 FR 51659, Dec. 18, 1985]

§2.108 Form of request.

A request shall be made in writing, shall reasonably describe the records sought in a way that will permit their identification and location, and should be addressed to one of the addresses set forth in §2.106, but otherwise need not be in any particular form.

§2.109 Requests which do not reasonably describe records sought.

(a) If the description of the records sought in the request is not sufficient to allow EPA to identify and locate the requested records, the EPA office taking action under §2.111 will notify the requestor (by telephone when practicable) that the request cannot be further processed until additional information is furnished.

(b) EPA will make every reasonable effort to assist in the identification and description of records sought and to assist the requestor in formulating his request. If a request is described in general terms (e.g., all records having

to do with a certain area), the EPA office taking action under § 2.111 may communicate with the requestor (by telephone when practicable) with a view toward reducing the administrative burden of processing a broad request and minimizing the fees payable by the requestor. Such attempts will not be used as a means to discourage requests, but rather as a means to help identify with more specificity the records actually sought.

§ 2.110 Responsibilities of Freedom of Information Officers.

(a) Upon receipt of a written request, the Freedom of information Officer (whether at EPA Headquarters or at an EPA region) shall mark the request with the date of receipt, and shall attach to the request a control slip indicating the date of receipt, the date by which response is due, a unique Request Identification Number, and other pertinent administrative information. The request and control slip shall then be forwarded immediately to the EPA office believed to be responsible for maintaining the records requested. (If the records requested are believed to be located at two or more EPA offices, each such office shall be furnished a copy of the request and control slip, with instructions concerning which office shall serve as the lead office for coordinating the response.) The Freedom of Information Officer shall retain a file copy of the request and control slip, and shall monitor the handling of the request to ensure a timely response.

(b) The Freedom of Information Officer shall maintain a file concerning each request received, which shall contain a copy of the request, initial and appeal determinations, and other pertinent correspondence and records.

(c) The Freedom of Information officer shall collect and maintain the information necessary to compile the reports required by 5 U.S.C. 552(d).

§ 2.111 Action by office responsible for responding to request.

(a) Whenever an EPA office becomes aware that it is responsible for responding to a request, the office shall:

(1) Take action under § 2.109, if required, to obtain a better description of the records requested;

(2) Locate the records as promptly as possible, or determine that the records are not known to exist, or that they are located at another EPA office, or that they are located at another Federal agency and not possessed by EPA;

(3) When appropriate, take action under § 2.120(c) to obtain payment or assurance of payment;

(4) If any located records contain business information, as defined in § 2.201(c), comply with subpart B of this part;

(5) Determine which of the requested records legally must be withheld, and why (see § 2.119(b));

(6) Of the requested records which are exempt from mandatory disclosure but which legally may be disclosed (see § 2.119(a)), determine which records will be withheld, and why;

(7) Issue all initial determination within the allowed period (see § 2.112), specifying (individually or by category) which records will be disclosed and which will be withheld, and signed by a person authorized to issue the determination under § 2.113(b). Denials of requests shall comply with § 2.113; and

(8) Furnish the appropriate Freedom of Information Officer a copy of the determination. If the determination denied a request for one or more existing, located records, the responding office shall also furnish the Freedom of Information officer the name, address, and telephone number of the EPA employee(s) having custody of the records, and shall maintain the records in a manner permitting their prompt forwarding to the General Counsel upon request if an appeal from the initial denial is filed. See also § 2.204(f).

(b) If it appears that some or all of the requested records are not in the possession of the EPA office which has been assigned responsibility for responding to the request but may be in the possession of some other EPA office, the Freedom of Information officer who is monitoring the request shall be so informed immediately.

(c) In determining which records are responsive to a request, the EPA office responding shall ordinarily include

those records within the Agency's possession as of the date of the Agency's receipt of the request.

(d) When a request for EPA records encompasses records of another Federal agency, the EPA office shall either: (1) Respond to the request after consulting with the originating agency when appropriate or; (2) promptly transfer responsibility for responding to the request to the originating agency provided that the other agency is subject to the FOIA. Whenever the EPA office refers a request to another agency, it shall notify the requestor of the referral.

[41 FR 36902, Sept. 1, 1976, as amended at 50 FR 51659, Dec. 18, 1985]

§2.112 Time allowed for issuance of initial determination.

(a) Except as otherwise provided in this section, not later than the tenth working day after the date of receipt by a Freedom of Information Office of a request for records, the EPA office responsible for responding to the request shall issue a written determination to the requestor stating which of the requested records will, and which will not, be released and the reason for any denial of a request. If the records are not known to exist or are not in EPA's possession, the EPA office shall so inform the requestor. To the extent requested records which are in EPA's possession are published by the Federal government, the response may inform the requestor that the records are available for inspection and where copies can be obtained.

(b) The period of 10 working days shall be measured from the date the request is first received and logged in by the Headquarters or regional Freedom of Information Office.

(c) There shall be excluded from the period of 10 working days (or any extension thereof) any time which elapses between the date that a requestor is notified by EPA under §2.109 that his request does not reasonably identify the records sought, and the date that the requestor furnishes a reasonable identification.

(d) There shall be excluded from the period of 10 working days (or any extension thereof) any time which elapses between the date that a requestor is notified by EPA under §2.120 that prepayment or assurance of payment of fees is required, and the date that the requestor pays (or makes suitable arrangements to pay) such charges.

(e) The EPA office taking action under §2.111, after notifying the appropriate Freedom of Information Office, may extend the basic 10-day period established under subsection (a) of this section by a period not to exceed 10 additional working days, by furnishing written notice to the requestor within the basic 10-day period stating the reasons for such extension and the date by which the office expects to be able to issue a determination. The period may be so extended only when absolutely necessary, only for the period required, and only when one or more of the following unusual circumstances require the extension:

(1) There is a need to search for and collect the requested records from field facilities or other establishments that are separate from the office processing the request:

(2) There is a need to search for, collect, and appropriately examine a voluminous amount of separate and distinct records which are demanded in a single request; or

(3) There is a need for consultation, which shall be conducted with all practicable speed, with another agency having a substantial interest in the determination of the request or among two or more components of EPA.

(f) Failure of EPA to issue a determination within the 10-day period or any authorized extension shall constitute final agency action which authorizes the requestor to commence an action in an appropriate Federal district court to obtain the records.

[41 FR 36902, Sept. 1, 1976, as amended at 50 FR 51659, Dec. 18, 1985]

§2.113 Initial denials of requests.

(a) An initial denial of a request may be issued only for the following reasons:

(1) A statutory provision, provision of this part, or court order requires that the information not be disclosed;

(2) The record is exempt from mandatory disclosure under 5 U.S.C. 552(b) and EPA has decided that the public

interest would not be served by disclosure; or

(3) Section 2.204(d)(1) requires initial denial because a third person must be consulted in connection with a business confidentiality claim.

(b) The Deputy Administrator, Assistant Administrators, Regional Administrators, the General Counsel, the Inspector General, Associate Administrators, and heads of headquarters staff offices are delegated the authority to issue initial determinations This authority may be redelegated; *Provided*, That the authority to issue initial denials of requests for existing, located records (other than denials based solely on § 2.204(d)(1)) may be redelegated only to persons occupying positions not lower than division director or equivalent.

(c) [Reserved]

(d)(1) Each initial determination to deny a request shall be written, signed, and dated, and, except as provided in paragraph (d)(2), shall contain a reference to the Request Identification Number, shall identify the records that are being withheld (individually, or, if the denial covers a large number of similar records, by described category), and shall state the basis for denial for each record or category of records being withheld.

(2) No initial determination shall reveal the existence or nonexistence of records if identifying the mere fact of the existence or nonexistence of those records would reveal confidential business information, confidential personal information or classified national security information. Instead of identifying the existence or nonexistence of the records, the initial determination shall state that the request is denied because either the records do not exist or they are exempt from mandatory disclosure under the applicable provision of 5 U.S.C. 552(b). No such determination shall be made without the concurrence of the General Counsel or his designee. The General Counsel has designated the Contracts and Information Law Branch to act on these requests for concurrence. See § 2.121 for guidance on initial determinations denying, in limited circumstances, the existence of certain law enforcement records or information.

(e) If the decision to deny a request is made by an authorized EPA employee other than the person signing the determination letter, that other person's identity and position shall be stated in the determination letter.

(f) Each initial determination which denies, in whole or in part, a request for one or more existing, located EPA records (including determinations described in § 2.113(d)(2) of this section) shall state that the requester may appeal the initial denial by sending a written appeal to the address shown in § 2.106(a) within 30 days after receipt of the determination. An initial determination which only denies the existence of records, however, will not include a notice of appeal rights.

(g) A determination shall be deemed issued on the date the determination letter is placed in EPA mailing channels for first class mailing to the requestor, delivered to the U.S. Postal Service for mailing, or personally delivered to the requestor, whichever date first occurs.

[41 FR 36902, Sept. 1, 1976, as amended at 50 FR 51659, Dec. 18, 1985; 53 FR 216, Jan. 5, 1988]

§ 2.114 Appeals from initial denials; manner of making.

(a) Any person whose request for one or more existing, located EPA records has been denied in whole or in part by an initial determination may appeal that denial by addressing a written appeal to the address shown in § 2.106(a).

(b) An appeal should be mailed no later than 30 calendar days after the date the requestor received the initial determination on the request. An untimely appeal may be treated either as a timely appeal or as a new request, at the option of the Freedom of Information Officer.

(c) The appeal letter shall contain a reference to the Request Identification Number (RIN), the date of the initial determination, and the name and address of the person who issued the initial denial. The appeal letter shall also indicate which of the records to which access was denied are the subjects of the appeal.

[41 FR 36902, Sept. 1, 1976, as amended at 50 FR 51659, Dec. 18, 1985]

§2.115 Appeal determinations; by whom made.

(a) The General Counsel shall make one of the following legal determinations in connection with every appeal from the initial denial of a request for an existing, located record:

(1) The record must be disclosed;

(2) The record must not be disclosed, because a statute or a provision of this part so requires; or

(3) The record is exempt from mandatory disclosure but legally may be disclosed as a matter of Agency discretion.

(b) Whenever the General Counsel has determined under paragraph (a)(3) of this section that a record is exempt from mandatory disclosure but legally may be disclosed, and the record has not been disclosed by EPA under 5 U.S.C. 552, the matter shall be referred to the Assistant Administrator for External Affairs. If the Assistant Administant Administrator determines that the public interest would not be served by disclosure, a determination denying the appeal shall be issued by the General Counsel. If the Assistant Administrator determines that the public interest would be served by disclosure, the record shall be disclosed unless the Administrator (upon a review of the matter requested by the appropriate Assistant Administrator, Associate Administrator, Regional Administrator, the General Counsel, or the head of a headquarters staff office) determines that the public interest would not be served by disclosure, in which case the General Counsel shall issue a determination denying the appeal. This review by the Assistant Administrator for External Affairs shall not apply to appeals from initial determinations by the Office of Inspector General to deny requests.

(c) The General Counsel may delegate his authority under paragraph (a) of this section to a Regional Counsel, or to any other attorney employed on a full-time basis by EPA, in connection with any category of appeals or any individual appeal.

(d) The Assistant Administrator for External Affairs may delegate the authority under paragraph (b) of this section to the Deputy Assistant Administrator for External Affairs.

[41 FR 36902, Sept. 1, 1976, as amended at 50 FR 51659, Dec. 18, 1985]

§2.116 Contents of determination denying appeal.

(a) Except as provided in paragraph (b) of this section, each determination denying an appeal from an initial denial shall be in writing, shall state which of the exemptions in 5 U.S.C. 552(b) apply to each requested existing record, and shall state the reason(s) for denial of the appeal. A denial determination shall also state the name and position of each EPA officer or employee who directed that the appeal be denied. Such a determination shall further state that the person whose request was denied may obtain de novo judicial review of the denial by complaint filed with the district court of the United States in the district in which the complainant resides, or has his principal place of business, or in which the Agency records are situated, or in the District of Columbia, pursuant to 5 U.S.C. 552(a)(4).

(b) No determination denying an appeal shall reveal the existence or nonexistence of records if identifying the mere fact of the existence or nonexistence of those records would reveal confidential business information, confidential personal information or classified national security information. Instead of identifying the existence or nonexistence of the records, the determination shall state that the appeal is denied because either the records do not exist or they are exempt from mandatory disclosure under the applicable provision of 5 U.S.C. 552(b).

[53 FR 217, Jan. 5, 1988]

§2.117 Time allowed for issuance of appeal determination.

(a) Except as otherwise provided in this section, not later than the twentieth working day after the date of receipt by the Freedom of Information Officer at EPA Headquarters of an appeal from an initial denial of a request for records, the General Counsel shall issue a written determination stating which of the requested records (as to

which an appeal was made) shall be disclosed and which shall not be disclosed.

(b) The period of 20 working days shall be measured from the date an appeal is first received by the Freedom of Information Officer at EPA Headquarters, except as otherwise provided in § 2.205(a).

(c) The Office of General Counsel, after notifying the Freedom of Information Officer at EPA Headquarters, may extend the basic 20-day period established under subsection (a) of this section by a period not to exceed 10 additional working days, by furnishing written notice to the requestor within the basic 20-day period stating the reasons for such extension and the date by which the office expects to be able to issue a determination. The period may be so extended only when absolutely necessary, only for the period required, and only when one or more of the following unusual circumstances require the extension:

(1) There is a need to search for and collect the records from field facilities or other establishments that are separate from the office processing the appeal;

(2) There is a need to search for, collect, and appropriately examine a voluminous amount of separate and distinct records which are demanded in a single request; or

(3) There is a need for consultation, which shall be conducted with all practicable speed, with another agency having a substantial interest in the determination of the request or among two or more components of EPA.

(d) No extension of the 20-day period shall be issued under subsection (c) of this section which would cause the total of all such extensions and of any extensions issued under § 2.112(e) to exceed 10 working days.

§ 2.118 Exemption categories.

(a) 5 U.S.C. 552(b) establishes nine exclusive categories of matters which are exempt from the mandatory disclosure requirements of 5 U.S.C. 552(a). No request under 5 U.S.C. 552 for an existing, located record in EPA's possession shall be denied by any EPA office or employee unless the record contains (or its disclosure would reveal) matters that are—

(1) Specifically authorized under criteria established by an Executive Order to be kept secret in the interest of national defense or foreign policy and are in fact properly classified pursuant to such Executive Order;

(2) Related solely to the internal personnel rules and practices of an agency;

(3) Specifically exempted from disclosure by statute (other than 5 U.S.C. 552(b)): *Provided,* That such statute:

(i) Requires that the matters be withheld from the public in such a manner as to leave no discretion on the issue, or

(ii) Establishes particular criteria for withholding or refers to particular types of matters to be withheld;

(4) Trade secrets and commercial or financial information obtained from a person and privileged or confidential (see Subpart B);

(5) Interagency or intra-agency memorandums or letters which would not be available by law to a party other than an agency in litigation with the agency;

(6) Personnel and medical files and similar files the disclosure of which would constitute a clearly unwarranted invasion of personal privacy;

(7)(i) Records or information compiled for law enforcement purposes, but only to the extent that the production of such law enforcement records or information:

(A) Could reasonably be expected to interfere with enforcement proceedings;

(B) Would deprive a person of a right to a fair trial or an impartial adjudication;

(C) Could reasonably be expected to constitute an unwarranted invasion of personal privacy;

(D) Could reasonably be expected to disclose the identity of a confidential source, including a State, local, or foreign agency or authority or any private institution which furnished information on a confidential basis, and, in the case of a record or information compiled by a criminal law enforcement authority in the course of a criminal investigation, or by an agency conducting a lawful national security intelligence investigation, information furnished by a confidential source;

(E) Would disclose techniques and procedures for law enforcement investigations or prosecutions, or would disclose guidelines for law enforcement investigations or prosecutions if such disclosure could reasonably be expected to risk circumvention of the law; or

(F) Could reasonably be expected to endanger the life or physical safety of any individual.

(ii) [Reserved]

(8) Contained in or related to examination, operating, or condition reports prepared by, on behalf of, or for the use of an agency responsible for the regulation or supervision of finanical institutions; or

(9) Geological and geophysical information and data, including maps, concerning wells.

(b) The fact that the applicability of an exemption permits the withholding of a requested record (or portion thereof) does not necessarily mean that the record must or should be withheld. See §2.119.

[41 FR 36902, Sept. 1, 1976, as amended at 43 FR 40000, Sept. 8, 1978; 53 FR 217, Jan. 5, 1988]

§2.119 Discretionary release of exempt documents.

(a) An EPA office may, in its discretion, release requested records despite the applicability of one or more of the exemptions listed in §2.118 (a)(2), (a)(5), or (a)(7). Disclosure of such records is encouraged if no important purpose would be served by withholding the records.

(b) As a matter of policy, EPA will not release a requested record if EPA has determined that one or more of the exemptions listed in §2.118(a)(1), (3), (4), (6), (8), or (9), applies to the record, except when ordered to do so by a Federal court or in exceptional circumstances under appropriate restrictions with the approval of the Office of General Counsel or a Regional Counsel.

§2.120 Fees; payment; waiver.

(a) *Fee schedule.* Requesters shall be charged the full allowable direct costs incurred by the Agency in responding to a FOIA request. However, if EPA uses a contractor to search for, reproduce or disseminate records responsive to a request, the cost to the requester shall not exceed the cost of the Agency itself performing the service.

(1) There are four categories of requests. Fees for each of the categories will be charged as follows:

(i) Commercial use requests. If the request seeks disclosure of records for a commercial use, the requester shall be charged for the time spent searching for the requested record, reviewing the record to determine whether it should be disclosed and for the cost of each page of duplication. Commercial use requesters should note that EPA also may charge fees to them for time spent searching for and/or reviewing records, even if EPA fails to locate the records or if the records located are determined to be exempt from disclosure.

(ii) Requests from an educational or non-commercial scientific institution whose purpose is scholarly or scientific research, involving a request which is not for a commercial use and seeks disclosure of records. In the case of such a request, the requester shall be charged only for the duplication cost of the records, except that the first 100 pages of duplication shall be furnished without charge.

(iii) Requests from a representative of the news media, involving a request which is not for a commercial use and seeks disclosure of records. In the case of such a request, the requester shall be charged only for the duplication cost of the records, except that the first 100 pages of duplication shall be furnished without charge.

(iv) All other requests. If the request seeks disclosure of records other than as described in paragraphs (a)(1)(i), (ii), and (iii) of this section, the requester shall be charged the full cost of search and duplication. However, the first two hours of search time (or its cost equivalent) and the first 100 pages of duplication (or their cost equivalent) shall be furnished without charge. Requesters in the ''all other requests'' category should note that EPA also may charge fees to them for time spent searching for records, even if EPA fails to locate the records or if the records located are determined to be exempt from disclosure.

(2) The determination of a requester's fee category will be based on the following:

(i) Commercial use requesters: The use to which the requester will put the documents requested;

(ii) Educational and non-commercial scientific institution requestors: Identity of the requester and the use to which the requestor will put the documents requested;

(iii) Representatives of the news media requesters: The identity of the requester and the use to which the requestor will put the documents requested.

(3) Fees will be charged to requesters, as appropriate, for search, duplication and review of requested records in accordance with the following schedule:

(i) Manual search for records.

(A) EPA Employees: For each ½ hour or portion thereof:

(*1*) GS–8 and below: $4.00.

(*2*) GS–9 and above: $10.00.

(B) Contractor employees: The requestor will be charged for actual charges up to but not exceeding the rate which would have been charged had EPA employees conducted the search.

(ii) Computer search for records charges will consist of:

(A) EPA employee operators: For each ½ hour or portion thereof:

(*1*) GS–8 and below: $4.00.

(*2*) GS–9 and above: $10.00, plus.

(B) Contractor operators: Requestors will be charged for the actual charges up to but not exceeding the rate which would have been charged had EPA employees conducted the search (see paragraph (a)(3)(i)(A) of this section), plus.

(C) Actual computer resource usage charges for this search.

(iii) Review of records. For each ½ hour or portion thereof (EPA employees):

(A) GS–8 and below: $4.00.

(B) GS–9 and above: $10.00.

(iv) Duplication or reproduction of records.

(A) Duplication or reproduction of documents by EPA employees (paper copy of paper original): $.15 per page.

(B) Computer printouts (other than those calculated in a direct-cost billing—see paragraph (a)(3)(ii) of this section ''Computer search for records'') $.15 per page.

(C) Other methods of duplication or reproduction, including, but not limited to, duplication of photographs, microfilm and magnetic tape, will be charged at the actual direct cost to EPA.

(4) Other charges.

(i) Other charges incurred in responding to a request including but not limited to, special handling or transportation of records, will be charged at the actual direct cost to EPA.

(ii) Certification or authentication of records: $25.00 per certification or authentication.

(5) No charge shall be made—

(i) For the cost of preparing or reviewing letters of response to a request or appeal;

(ii) For time spent resolving legal or policy issues concerning the application of exemptions;

(iii) For search time and the first 100 pages of duplication for requests described in § 2.120(a)(1)(ii) and (iii) of this section;

(iv) For the first two hours of search time (or its cost equivalent) and for the first 100 pages of duplication for requests described in § 2.120(a)(1)(iv) of this section;

(v) If the total fee in connection with a request is less than $25.00, or if the costs of collecting the fee would otherwise exceed the amount of the fee. However, when EPA reasonably believes that a requester or group of requesters is attempting to break a request down into a series of requests for the purpose of avoiding the assessment of fees, EPA will aggregate such requests to determine the total fee, and will charge accordingly;

(vi) For responding to a request by an individual for one copy of a record retrievable by the requesting individual's name or personal identifier from a Privacy Act system of records;

(vii) For furnishing records requested by either House of Congress, or by a duly authorized committee or subcommittee of Congress, unless the records are requested for the benefit of an individual Member of Congress or for a constituent;

(viii) For furnishing records requested by and for the official use of other Federal agencies; or

(ix) For furnishing records needed by an EPA contractor, subcontractor, or

grantee to perform the work required by the EPA contract or grant.

(b) *Method of payment.* All fee payments shall be in the form of a check or money order payable to the ''U.S. Environmental Protection Agency'' and shall be sent (accompanied by a reference to the pertinent Request Identification Number(s)) to the appropriate Headquarters or Regional Office lock box address:

(1) EPA—Washington Headquarters, P.O. Box 360277M, Pittsburgh, PA 15251;

(2) EPA—Region 1, P.O. Box 360197M, Pittsburgh, PA 15251;

(3) EPA—Region 2, P.O. Box 360188M, Pittsburgh, PA 15251;

(4) EPA—Region 3, P.O. Box 360515M, Pittsburgh, PA 15251;

(5) EPA—Region 4, P.O. Box 100142, Atlanta, GA. 30384;

(6) EPA—Region 5, P.O. Box 70753, Chicago, IL 60673;

(7) EPA—Region 6, P.O. Box 360582M, Pittsburgh, PA 15251;

(8) EPA—Region 7, P.O. Box 360748M, Pittsburgh, PA 15251;

(9) EPA—Region 8, P.O. Box 360859M, Pittsburgh, PA 15251;

(10) EPA—Region 9, P.O. Box 360863M, Pittsburgh, PA 15251;

(11) EPA—Region 10, P.O. Box 360903M, Pittsburgh, PA 15251;

Under the Debt Collection Act of 1982 (Pub. L. 97–365), payment (except for prepayment) shall be due within thirty (30) calendar days after the date of billing. If payment is not received at the end of thirty calendar days, interest and a late payment handling charge will be assessed. In addition, under this Act, a penalty charge will be applied on any principal amount not paid within ninety (90) calendar days after the due date for payment. By the authority of the Debt Collection Act of 1982, delinquent amounts due may be collected through administrative offset or referred to private collection agencies. Information related to delinquent accounts may also be reported to the appropriate credit agencies.

(c) *Assurance of payment.* (1) If an EPA office estimates that the fees for processing a request (or aggregated requests as described in § 2.120(a)(5)(vi) of this section) will exceed $25.00, that office need not search for, duplicate or disclose records in response to the request(s) until the requester assures payment of the total amount of fees estimated to become due under this section. In such cases, the EPA office will promptly inform the requester (by telephone it practicable) of the need to make assurance of payment.

(2) An EPA office may not require a requester to make an advance payment, i.e. payment before work is commenced or continued on a request, unless:

(i) A requester has previously failed to pay a fee charged in a timely fashion (i.e., within 30 days after the date of the billing), or

(ii) The EPA office estimates or determines that the allowable charges that a requester may be required to pay are likely to exceed $250.00. Then the EPA office will notify the requester of the likely cost and obtain satisfactory assurance of full payment where the requester has a history of prompt payment of FOIA fees, or require an advance payment of an amount up to the full estimated charges in the case of requesters with no history of payment. If such advance payment is not received within 30 days after EPA's billing, the request will not be processed and the request will be closed. See also § 2.112(d).

(d) *Reduction or waiver of fee.* (1) The fee chargeable under this section shall be reduced or waived by EPA if the Agency determines that disclosure of the information:

(i) Is in the public interest because it is likely to contribute significantly to public understanding of the operations or activities of the government; and

(ii) Is not primarily in the commercial interest of the requestor.

(2) Both of these requirements must be satisfied before fees properly assessable can be waived or reduced.

(3) The Agency will employ the following four factors in determining whether the first requirement has been met:

(i) The subject of the request: Whether the subject of the requested records concerns ''the operations or activities of the government'';

(ii) The informative value of the information to be disclosed: Whether the disclosure is ''likely to contribute to

an understanding of government operations or activities'';

(iii) The contribution to an understanding of the subject by the general public likely to result from disclosure: Whether disclosure of the requested information will contribute to ''public understanding''; and

(iv) The significance of the contribution to public understanding: Whether disclosure is likely to contribute ''significantly'' to public understanding of government operations or activities.

(4) The Agency will employ the following factors in determining whether the second requirement has been met:

(i) The existence and magnitude of a commercial interest: Whether the requester has a commercial interest that would be furthered by the requested disclosure; and, if so

(ii) The primary interest in disclosure: Whether the magnitude of the identified commercial interest of the requester is sufficiently large, in comparison with the public interest in disclosure, that disclosure is ''primarily in the commercial interest of the requester.''

(5) In all cases, the burden shall be on the requester to present information in support of a request for a waiver of fees. A request for reduction or waiver of fees should include:

(i) A clear statement of the requester's interest in the requested documents;

(ii) The use proposed for the documents and whether the requester will derive income or other benefit from such use;

(iii) A statement of how the public will benefit from such use and from the release of the requested documents; and

(iv) If specialized use of the documents or information is contemplated, a statement of the requester's qualifications that are relevant to the specialized use.

(6) A request for reduction or waiver of fees shall be addressed to the appropriate Freedom of Information Officer. The requester shall be informed in writing of the Agency's decision whether to grant or deny the fee waiver or fee reduction request. This decision may be appealed by letter addressed to the EPA Freedom of Information Officer. The General Counsel shall decide such appeals. The General Counsel may redelegate this authority only to the Deputy General Counsel or the Associate General Counsel for Grants, Contracts and General Law.

(e) The Financial Management Office shall maintain a record of all fees charged requesters for searching for, reviewing and reproducing requested records under this section. If after the end of 60 calendar days from the date on which request for payment was made the requester has not submitted payment to the appropriate EPA billing address (as listed in § 2.120(b)), the Financial Management Division shall place the requester's name on a delinquent list which is sent to the EPA Freedom of Information Officer. If a requester whose name appears on the delinquent list makes a request under this part, the EPA Freedom of Information Officer shall inform the requester that EPA will not process the request until the requester submits payment of the overdue fee from the earlier request. Any request made by an individual who specifies an affiliation with or representation of a corporation, association, law firm, or other organization shall be deemed to be a request by the corporation, association, law firm, or other organization. If an organization placed on the delinquent list can show that the person who made the request for which payment was overdue did not make the request on behalf of the organization the organization will be removed from the delinquent list but the name of the individual shall remain on the list. A requester shall not be placed on the delinquent list if a request for a reduction or for a waiver is pending under paragraph (d) of this section.

[53 FR 217, Jan. 5, 1988]

§ 2.121 Exclusions.

(a) Whenever a request is made which involves access to records described in § 2.118(a)(7)(i)(A), and

(1) The investigation or proceeding involves a possible violation of criminal law; and

(2) There is reason to believe that the subject of the investigation or proceeding is not aware of its pendency, and disclosure of the existence of such

records could reasonably be expected to interfere with enforcement proceedings, EPA shall, during only such time as the circumstances continue, treat the records as not subject to the requirements of 5 U.S.C. 552 and this subpart.

(b) Whenever informant records maintained by the Agency under an informant's name or personal identifier are requested by a third party according to the informant's name or personal identifier and the informant's status as an informant has not been officially confirmed, EPA shall treat the records as not subject to the requirements of 5 U.S.C. 552 and this subpart.

(c) No determination relying on this section shall be issued without the concurrence of the General Counsel or his designee. The General Counsel has designated the Contracts and Information Law Branch to act on these requests for concurrence.

(d) An initial determination which only relies on this section will not include notice of appeal rights.

[53 FR 219, Jan. 5, 1988]

Subpart B—Confidentiality of Business Information

§2.201 Definitions.

For the purposes of this subpart:

(a) *Person* means an individual, partnership, corporation, association, or other public or private organization or legal entity, including Federal, State or local governmental bodies and agencies and their employees.

(b) *Business* means any person engaged in a business, trade, employment, calling or profession, whether or not all or any part of the net earnings derived from such engagement by such person inure (or may lawfully inure) to the benefit of any private shareholder or individual.

(c) *Business information* (sometimes referred to simply as *information*) means any information which pertains to the interests of any business, which was developed or acquired by that business, and (except where the context otherwise requires) which is possessed by EPA in recorded form.

(d) *Affected business* means, with reference to an item of business information, a business which has asserted (and not waived or withdrawn) a business confidentiality claim covering the information, or a business which could be expected to make such a claim if it were aware that disclosure of the information to the public was proposed.

(e) *Reasons of business confidentiality* include the concept of trade secrecy and other related legal concepts which give (or may give) a business the right to preserve the confidentiality of business information and to limit its use or disclosure by others in order that the business may obtain or retain business advantages it derives from its rights in the information. The definition is meant to encompass any concept which authorizes a Federal agency to withhold business information under 5 U.S.C. 552(b)(4), as well as any concept which requires EPA to withhold information from the public for the benefit of a business under 18 U.S.C. 1905 or any of the various statutes cited in §2.301 through §2.309.

(f) [Reserved]

(g) Information which is *available to the public* is information in EPA's possession which EPA will furnish to any member of the public upon request and which EPA may make public, release or otherwise make available to any person whether or not its disclosure has been requested.

(h) *Business confidentiality claim* (or, simply, *claim*) means a claim or allegation that business information is entitled to confidential treatment for reasons of business confidentiality, or a request for a determination that such information is entitled to such treatment.

(i) *Voluntarily submitted information* means business information in EPA's possession—

(1) The submission of which EPA had no statutory or contractual authority to require; and

(2) The submission of which was not prescribed by statute or regulation as a condition of obtaining some benefit (or avoiding some disadvantage) under a regulatory program of general applicability, including such regulatory programs as permit, licensing, registration, or certification programs, but excluding programs concerned solely or

primarily with the award or administration by EPA of contracts or grants.

(j) *Recorded* means written or otherwise registered in some form for preserving information, including such forms as drawings, photographs, videotape, sound recordings, punched cards, and computer tape or disk.

(k) [Reserved]

(l) *Administrator, Regional Administrator, General Counsel, Regional Counsel, and Freedom of Information Officer* mean the EPA officers or employees occupying the positions so titled.

(m) *EPA office* means any organizational element of EPA, at any level or location. (The terms *EPA office* and *EPA legal office* are used in this subpart for the sake of brevity and ease of reference. When this subpart requires that an action be taken by an *EPA office* or by an *EPA legal office,* it is the responsibility of the officer or employee in charge of that office to take the action or ensure that it is taken.)

(n) *EPA legal office* means the EPA General Counsel and any EPA office over which the General Counsel exercises supervisory authority, including the various Offices of Regional Counsel. (See paragraph (m) of this section.)

(o) A *working day* is any day on which Federal government offices are open for normal business. Saturdays, Sundays, and official Federal holidays are not working days; all other days are.

§ 2.202 Applicability of subpart; priority where provisions conflict; records containing more than one kind of information.

(a) Sections 2.201 through 2.215 establish basic rules governing business confidentiality claims, the handling by EPA of business information which is or may be entitled to confidential treatment, and determinations by EPA of whether information is entitled to confidential treatment for reasons of business confidentiality.

(b) Various statutes (other than 5 U.S.C. 552) under which EPA operates contain special provisions concerning the entitlement to confidential treatment of information gathered under such statutes. Sections 2.301 through 2.311 prescribe rules for treatment of certain categories of business information obtained under the various statutory provisions. Paragraph (b) of each of those sections should be consulted to determine whether any of those sections applies to the particular information in question.

(c) The basic rules of §§ 2.201 through 2.215 govern except to the extent that they are modified or supplanted by the special rules of §§ 2.301 through 2.311. In the event of a conflict between the provisions of the basic rules and those of a special rule which is applicable to the particular information in question, the provision of the special rule shall govern.

(d) If two or more of the sections containing special rules apply to the particular information in question, and the applicable sections prescribe conflicting special rules for the treatment of the information, the rule which provides greater or wider availability to the public of the information shall govern.

(e) For most purposes, a document or other record may usefully be treated as a single unit of *information,* even though in fact the document or record is comprised of a collection of individual items of information. However, in applying the provisions of this subpart, it will often be necessary to separate the individual items of information into two or more categories, and to afford different treatment to the information in each such category. The need for differentiation of this type may arise, e.g., because a business confidentiality claim covers only a portion of a record, or because only a portion of the record is eligible for confidential treatment. EPA offices taking action under this subpart must be alert to this problem.

(f) In taking actions under this subpart, EPA offices should consider whether it is possible to obtain the affected business's consent to disclosure of useful portions of records while protecting the information which is or may be entitled to confidentiality (e.g., by withholding such portions of a record as would identify a business, or by disclosing data in the form of industry-wide aggregates, multi-year averages or totals, or some similar form).

(g) This subpart does not apply to questions concerning entitlement to confidential treatment or information

which concerns an individual solely in his personal, as opposed to business, capacity.

[41 FR 36902, Sept. 1, 1976, as amended at 43 FR 40000, Sept. 8, 1978; 50 FR 51661, Dec. 18, 1985]

§2.203 Notice to be included in EPA requests, demands, and forms; method of asserting business confidentiality claim; effect of failure to assert claim at time of submission.

(a) *Notice to be included in certain requests and demands for information, and in certain forms.* Whenever an EPA office makes a written request or demand that a business furnish information which, in the office's opinion, is likely to be regarded by the business as entitled to confidential treatment under this subpart, or whenever an EPA office prescribes a form for use by businesses in furnishing such information, the request, demand, or form shall include or enclose a notice which—

(1) States that the business may, if it desires, assert a business confidentiality claim covering part or all of the information, in the manner described by paragraph (b) of this section, and that information covered by such a claim will be disclosed by EPA only to the extent, and by means of the procedures, set forth in this subpart;

(2) States that if no such claim accompanies the information when it is received by EPA, it may be made available to the public by EPA without further notice to the business; and

(3) Furnishes a citation of the location of this subpart in the Code of Federal Regulations and the FEDERAL REGISTER.

(b) *Method and time of asserting business confidentiality claim.* A business which is submitting information to EPA may assert a business confidentiality claim covering the information by placing on (or attaching to) the information, at the time it is submitted to EPA, a cover sheet, stamped or typed legend, or other suitable form of notice employing language such as *trade secret, proprietary,* or *company confidential.* Allegedly confidential portions of otherwise non-confidential documents should be clearly identified by the business, and may be submitted separately to facilitate identification and handling by EPA. If the business desires confidential treatment only until a certain date or until the occurrence of a certain event, the notice should so state.

(c) *Effect of failure to assert claim at time of submission of information.* If information was submitted by a business to EPA on or after October 1, 1976, in response to an EPA request or demand (or on an EPA-prescribed form) which contained the substance of the notice required by paragraph (a) of this section, and if no business confidentiality claim accompanied the information when it was received by EPA, the inquiry to the business normally required by §2.204(c)(2) need not be made. If a claim covering the information is received after the information itself is received, EPA will make such efforts as are administratively practicable to associate the late claim with copies of the previously-submitted information in EPA files (see §2.204(c)(1)). However, EPA cannot assure that such efforts will be effective, in light of the possibility of prior disclosure or widespread prior dissemination of the information.

§2.204 Initial action by EPA office.

(a) *Situations requiring action.* This section prescribes procedures to be used by EPA offices in making initial determinations of whether business information is entitled to confidential treatment for reasons of business confidentiality. Action shall be taken under this section whenever an EPA office:

(1) Learns that it is responsible for responding to a request under 5 U.S.C. 552 for the release of business information; in such a case, the office shall issue an initial determination within the period specified in §2.112;

(2) Desires to determine whether business information in its possession is entitled to confidential treatment, even though no request for release of the information has been received; or

(3) Determines that it is likely that EPA eventually will be requested to disclose the information at some future date and thus will have to determine whether the information is entitled to confidential treatment. In such a case

this section's procedures should be initiated at the earliest practicable time, in order to increase the time available for preparation and submission of comments and for issuance of determinations, and to make easier the task of meeting response deadlines if a request for release of the information is later received under 5 U.S.C. 552.

(b) *Previous confidentiality determination.* The EPA office shall first ascertain whether there has been a previous determination, issued by a Federal court or by an EPA legal office acting under this subpart, holding that the information in question is entitled to confidential treatment for reasons of business confidentiality.

(1) If such a determination holds that the information is entitled to confidential treatment, the EPA Office shall furnish any person whose request for the information is pending under 5 U.S.C. 552 an initial determination (see § 2.111 and § 2.113) that the information has previously been determined to be entitled to confidential treatment, and that the request is therefore denied. The office shall furnish such person the appropriate case citation or EPA determination. If the EPA office believes that a previous determination which was issued by an EPA legal office may be improper or no longer valid, the office shall so inform the EPA legal office, which shall consider taking action under § 2.205(h).

(2) With respect to all information not known to be covered by such a previous determination, the EPA office shall take action under paragraph (c) of this section.

(c) *Determining existence of business confidentiality claims.* (1) Whenever action under this paragraph is required by paragraph (b)(2) of this section, the EPA office shall examine the information and the office's records to determine which businesses, if any, are affected businesses (see § 2.201(d)), and to determine which businesses if any, have asserted business confidentiality claims which remain applicable to the information. If any business is found to have asserted an applicable claim, the office shall take action under paragraph (d) of this section with respect to each such claim.

(2)(i) If the examination conducted under paragraph (c)(1) of this section discloses the existence of any business which, although it has not asserted a claim, might be expected to assert a claim if it knew EPA proposed to disclose the information, the EPA office shall contact a responsible official of each such business to learn whether the business asserts a claim covering the information. However, no such inquiry need be made to any business—

(A) Which failed to assert a claim covering the information when responding to an EPA request or demand, or supplying information on an EPA form, which contained the substance of the statements prescribed by § 2.203(a);

(B) Which otherwise failed to assert a claim covering the information after being informed by EPA that such failure could result in disclosure of the information to the public; or

(C) Which has otherwise waived or withdrawn a claim covering the information.

(ii) If a request for release of the information under 5 U.S.C. 552 is pending at the time inquiry is made under this paragraph (c)(2), the inquiry shall be made by telephone or equally prompt means, and the responsible official contacted shall be informed that any claim the business wishes to assert must be brought to the EPA office's attention no later than the close of business on the third working day after such inquiry.

(iii) A record shall be kept of the results of any inquiry under this paragraph (c)(2). If any business makes a claim covering the information, the EPA office shall take further action under paragraph (d) of this section.

(3) If, after the examination under paragraph (c)(1) of this section, and after any inquiry made under paragraph (c)(2) of this section, the EPA office knows of no claim covering the information and the time for response to any inquiry has passed, the information shall be treated for purposes of this subpart as not entitled to confidential treatment.

(d) *Preliminary determination.* Whenever action under this paragraph is required by paragraph (c)(1) or (2) of this section on any business's claim, the EPA Office shall make a determination

with respect to each such claim. Each determination shall be made after consideration of the provisions of § 2.203, the applicable substantive criteria in § 2.208 or elsewhere in this subpart, and any previously-issued determinations under this subpart which are applicable.

(1) If, in connection with any business's claim, the office determines that the information may be entitled to confidential treatment, the office shall—

(i) Furnish the notice of opportunity to submit comments prescribed by paragraph (e) of this section to each business which is known to have asserted an applicable claim and which has not previously been furnished such notice with regard to the information in question;

(ii) Furnish, to any person whose request for release of the information is pending under 5 U.S.C. 552, a determination (in accordance with § 2.113) that the information may be entitled to confidential treatment under this subpart and 5 U.S.C. 552(b)(4), that further inquiry by EPA pursuant to this subpart is required before a final determination on the request can be issued, that the person's request is therefore initially denied, and that after further inquiry a final determination will be issued by an EPA legal office; and

(iii) Refer the matter to the appropriate EPA legal office, furnishing the information required by paragraph (f) of this section after the time has elapsed for receipt of comments from the affected business.

(2) If, in connection with all applicable claims, the office determines that the information clearly is not entitled to confidential treatment, the office shall take the actions required by § 2.205(f). However, if a business has previously been furnished notice under § 2.205(f) with respect to the same information, no further notice need be furnished to that business. A copy of each notice furnished to a business under this paragraph (d)(2) and § 2.205(f) shall be forwarded promptly to the appropriate EPA legal office.

(e) *Notice to affected businesses; opportunity to comment.* (1) Whenever required by paragraph (d)(1) of this section, the EPA office shall promptly furnish each business a written notice stating that EPA is determining under this subpart whether the information is entitled to confidential treatment, and affording the business an opportunity to comment. The notice shall be furnished by certified mail (return receipt requested), by personal delivery, or by other means which allows verification of the fact and date of receipt. The notice shall state the address of the office to which the business's comments shall be addressed (the EPA office furnishing the notice, unless the General Counsel has directed otherwise), the time allowed for comments, and the method for requesting a time extension under § 2.205(b)(2). The notice shall further state that EPA will construe a business's failure to furnish timely comments as a waiver of the business's claim.

(2) If action under this section is occasioned by a request for the information under 5 U.S.C. 552, the period for comments shall be 15 working days after the date of the business's receipt of the written notice. In other cases, the EPA office shall establish a reasonable period for comments (not less than 15 working days after the business's receipt of the written notice). The time period for comments shall be considered met if the business's comments are postmarked or hand delivered to the office designated in the notice by the date specified. In all cases, the notice shall call the business's attention to the provisions of § 2.205(b).

(3) At or about the time the written notice is furnished, the EPA office shall orally inform a responsible representative of the business (by telephone or otherwise) that the business should expect to receive the written notice, and shall request the business to contact the EPA office if the written notice has not been received within a few days, so that EPA may furnish a duplicate notice.

(4) The written notice required by paragraph (e)(1) of this section shall invite the business's comments on the following points (subject to paragraph (e)(5) of this section):

(i) The portions of the information which are alleged to be entitled to confidential treatment;

(ii) The period of time for which confidential treatment is desired by the business (e.g., until a certain date, until the occurrence of a specified event, or permanently);

(iii) The purpose for which the information was furnished to EPA and the approximate date of submission, if known;

(iv) Whether a business confidentiality claim accompanied the information when it was received by EPA;

(v) Measures taken by the business to guard against undesired disclosure of the information to others;

(vi) The extent to which the information has been disclosed to others, and the precautions taken in connection therewith;

(vii) Pertinent confidentiality determinations, if any, by EPA or other Federal agencies, and a copy of any such determination, or reference to it, if available;

(viii) Whether the business asserts that disclosure of the information would be likely to result in substantial harmful effects on the business' competitive position, and if so, what those harmful effects would be, why they should be viewed as substantial, and an explanation of the causal relationship between disclosure and such harmful effects; and

(ix) Whether the business asserts that the information is voluntarily submitted information as defined in § 2.201(i), and if so, whether and why disclosure of the information would tend to lessen the availability to EPA of similar information in the future.

(5) To the extent that the EPA office already possesses the relevant facts, the notice need not solicit responses to the matters addressed in paragraphs (e)(4) (i) through (ix) of this section, although the notice shall request confirmation of EPA's understanding of such facts where appropriate.

(6) The notice shall refer to § 2.205(c) and shall include the statement prescribed by § 2.203(a).

(f) *Materials to be furnished to EPA legal office.* When a matter is referred to an EPA legal office under paragraph (d)(1) of this section, the EPA office taking action under this section shall forward promptly to the EPA legal office the following items:

(1) A copy of the information in question, or (where the quantity or form of the information makes forwarding a copy of the information impractical) representative samples, a description of the information, or both;

(2) A description of the circumstances and date of EPA's acquisition of the information;

(3) The name, address, and telephone number of the EPA employee(s) most familiar with the information;

(4) The name, address and telephone number of each business which asserts an applicable business confidentiality claim;

(5) A copy of each applicable claim (or the record of the assertion of the claim), and a description of when and how each claim was asserted;

(6) Comments concerning each business's compliance or noncompliance with applicable requirements of § 2.203;

(7) A copy of any request for release of the information pending under 5 U.S.C. 552;

(8) A copy of the business's comments on whether the information is entitled to confidential treatment;

(9) The office's comments concerning the appropriate substantive criteria under this subpart, and information the office possesses concerning the information's entitlement to confidential treatment; and

(10) Copies of other correspondence or memoranda which pertain to the matter.

[41 FR 36902, Sept. 1, 1976, as amended at 43 FR 40000, Sept. 8, 1978; 50 FR 51661, Dec. 18, 1985]

§ 2.205 Final confidentiality determination by EPA legal office.

(a) *Role of EPA legal office.* (1) The appropriate EPA legal office (see paragraph (i) of this section) is responsible for making the final administrative determination of whether or not business information covered by a business confidentiality claim is entitled to confidential treatment under this subpart.

(2) When a request for release of the information under 5 U.S.C. 552 is pending, the EPA legal office's determination shall serve as the final determination on appeal from an initial denial of the request.

(i) If the initial denial was issued under § 2.204(b)(1), a final determination by the EPA legal office is necessary only if the requestor has actually filed an appeal.

(ii) If the initial denial was issued under § 2.204(d)(1), however, the EPA legal office shall issue a final determination in every case, unless the request has been withdrawn. (Initial denials under § 2.204(d)(1) are of a procedural nature, to allow further inquiry into the merits of the matter, and a requestor is entitled to a decision on the merits.) If an appeal from such a denial has not been received by the EPA Freedom of Information Officer on the tenth working day after issuance of the denial, the matter shall be handled as if an appeal had been received on that day, for purposes of establishing a schedule for issuance of an appeal decision under § 2.117 of this part.

(b) *Comment period; extensions; untimeliness as waiver of claim.* (1) Each business which has been furnished the notice and opportunity to comment prescribed by § 2.204(d)(1) and § 2.204(e) shall furnish its comments to the office specified in the notice in time to be postmarked or hand delivered to that office not later than the date specified in the notice (or the date established in lieu thereof under this section).

(2) The period for submission of comments may be extended if, before the comments are due, a request for an extension of the comment period is made by the business and approved by the EPA legal office. Except in extraordinary circumstances, the EPA legal office will not approve such an extension without the consent of any person whose request for release of the information under 5 U.S.C. 552 is pending.

(3) The period for submission of comments by a business may be shortened in the manner described in paragraph (g) of this section.

(4) If a business's comments have not been received by the specified EPA office by the date they are due (including any approved extension), that office shall promptly inquire whether the business has complied with paragraph (b)(1) of this section. If the business has complied with paragraph (b)(1) but the comments have been lost in transmission, duplicate comments shall be requested.

(c) *Confidential treatment of comments from business.* If information submitted to EPA by a business as part of its comments under this section pertains to the business's claim, is not otherwise possessed by EPA, and is marked when received in accordance with § 2.203(b), it will be regarded by EPA as entitled to confidential treatment and will not be disclosed by EPA without the business's consent, unless its disclosure is duly ordered by a Federal court, notwithstanding other provisions of this subpart to the contrary.

(d) *Types of final determinations; matters to be considered.* (1) If the EPA legal office finds that a business has failed to furnish comments under paragraph (b) of this section by the specified due date, it shall determine that the business has waived its claim. If, after application of the preceding sentence, no claim applies to the information, the office shall determine that the information is not entitled to confidential treatment under this subpart and, subject to § 2.210, is available to the public.

(2) In all other cases, the EPA legal office shall consider each business's claim and comments, the various provisions of this subpart, any previously-issued determinations under this subpart which are pertinent, the materials furnished it under § 2.204(f), and such other materials as it finds appropriate. With respect to each claim, the office shall determine whether or not the information is entitled to confidential treatment for the benefit of the business that asserted the claim, and the period of any such entitlement (e.g., until a certain date, until the occurrence of a specified event, or permanently), and shall take further action under paragraph (e) or (f) of this section, as appropriate.

(3) Whenever the claims of two or more businesses apply to the same information, the EPA legal office shall take action appropriate under the particular circumstances to protect the interests of all persons concerned (including any person whose request for the information is pending under 5 U.S.C. 552).

(e) *Determination that information is entitled to confidential treatment.* If the

EPA legal office determines that the information is entitled to confidential treatment for the full period requested by the business which made the claim, EPA shall maintain the information in confidence for such period, subject to paragraph (h) of this section, § 2.209, and the other provisions of this subpart which authorize disclosure in specified circumstances, and the office shall so inform the business. If any person's request for the release of the information is then pending under 5 U.S.C. 552, the EPA legal office shall issue a final determination denying that request.

(f) *Determination that information is not entitled to confidential treatment; notice; waiting period; release of information.* (1) Notice of denial (or partial denial) of a business confidentiality claim, in the form prescribed by paragraph (f)(2) of this section, shall be furnished—

(i) By the EPA office taking action under § 2.204, to each business on behalf of which a claim has been made, whenever § 2.204(d)(2) requires such notice; and

(ii) By the EPA legal office taking action under this section, to each business which has asserted a claim applicable to the information and which has furnished timely comments under paragraph (b) of this section, whenever the EPA legal office determines that the information is not entitled to confidential treatment under this subpart for the benefit of the business, or determines that the period of any entitlement to confidential treatment is shorter than that requested by the business.

(2) The notice prescribed by paragraph (f)(1) of this section shall be written, and shall be furnished by certified mail (return receipt requested), by personal delivery, or by other means which allows verification of the fact of receipt and the date of receipt. The notice shall state the basis for the determination, that it constitutes final agency action concerning the business confidentiality claim, and that such final agency action may be subject to judicial review under Chapter 7 of Title 5, United States Code. With respect to EPA's implementation of the determination, the notice shall state that (subject to § 2.210) EPA will make the information available to the public on the tenth working day after the date of the business's receipt of the written notice (or on such later date as is established in lieu thereof by the EPA legal office under paragraph (f)(3) of this section), unless the EPA legal office has first been notified of the business's commencement of an action in a Federal court to obtain judicial review of the determination, and to obtain preliminary injunctive relief against disclosure. The notice shall further state that if such an action is timely commenced, EPA may nonetheless make the information available to the public (in the absence of an order by the court to the contrary), once the court has denied a motion for a preliminary injunction in the action or has otherwise upheld the EPA determination, or whenever it appears to the EPA legal office, after reasonable notice to the business, that the business is not taking appropriate measures to obtain a speedy resolution of the action. If the information has been found to be temporarily entitled to confidential treatment, the notice shall further state that the information will not be disclosed prior to the end of the period of such temporary entitlement to confidential treatment.

(3) The period established in a notice under paragraph (f)(2) of this section for commencement of an action to obtain judicial review may be extended if, before the expiration of such period, a request for an extension is made by the business and approved by the EPA legal office. Except in extraordinary circumstances, the EPA legal office will not approve such an extension without the consent of any person whose request for release of the information under 5 U.S.C. 552 is pending.

(4) After the expiration of any period of temporary entitlement to confidential treatment, a determination under this paragraph (f) shall be implemented by the EPA legal office by making the information available to the public (in the absence of a court order prohibiting disclosure) whenever—

(i) The period provided for commencement by a business of an action to obtain judicial review of the determination has expired without notice to

the EPA legal office of commencement of such an action;

(ii) The court, in a timely-commenced action, has denied the business' motion for a preliminary injunction, or has otherwise upheld the EPA determination; or

(iii) The EPA legal office, after reasonable notice has been provided to the business, finds that the business is not taking appropriate measures to obtain a speedy resolution of the timely-commenced action.

(5) Any person whose request for release of the information under 5 U.S.C. 552 is pending at the time notice is given under paragraph (f)(2) of this section shall be furnished a determination under 5 U.S.C. 552 stating the circumstances under which the information will be released.

(g) *Emergency situations.* If the General Counsel finds that disclosure of information covered by a claim would be helpful in alleviating a situation posing an imminent and substantial danger to public health or safety, he may prescribe and make known to interested persons such shorter comment period (paragraph (b) of this section), post-determination waiting period (paragraph (f) of this section), or both, as he finds necessary under the circumstances.

(h) *Modification of prior determinations.* A determination that information is entitled to confidential treatment for the benefit of a business, made under this subpart by an EPA legal office, shall continue in effect in accordance with its terms until an EPA legal office taking action under this section, or under §2.206 or §2.207, issues a final determination stating that the earlier determination no longer describes correctly the information's entitlement to confidential treatment because of change in the applicable law, newly-discovered or changed facts, or because the earlier determination was clearly erroneous. If an EPA legal office tentatively concludes that such an earlier determination is of questionable validity, it shall so inform the business, and shall afford the business an opportunity to furnish comments on pertinent issues in the manner described by §2.204(e) and paragraph (b) of this section. If, after consideration of any timely comments submitted by the business, the EPA legal office makes a revised final determination that the information is not entitled to confidential treatment, or that the period of entitlement to such treatment will end sooner than it would have ended under the earlier determination, the office will follow the procedure described in paragraph (f) of this section. Determinations under this section may be made only by, or with the concurrence of, the General Counsel.

(i) *Delegation and redelegation of authority.* Unless the General Counsel otherwise directs, or this subpart otherwise specifically provides, determinations and actions required by this subpart to be made or taken by an EPA legal office shall be made or taken by the appropriate Regional counsel whenever the EPA office taking action under §2.204 or §2.206(b) is under the supervision of a Regional Administrator, and by the General Counsel in all other cases. The General Counsel may redelegate any or all of his authority under this subpart to any attorney employed by EPA on a full-time basis under the General Counsel's supervision. A Regional Counsel may redelegate any or all of his authority under this subpart to any attorney employed by EPA on a full-time basis under the Regional counsel's supervision.

[41 FR 36902, Sept. 1, 1976, as amended at 50 FR 51661, Dec. 18, 1985]

§2.206 Advance confidentiality determinations.

(a) An advance determination under this section may be issued by an EPA legal office if—

(1) EPA has requested or demanded that a business furnish business information to EPA;

(2) The business asserts that the information, if submitted, would constitute voluntarily submitted information under §2.201(i);

(3) The business will voluntarily submit the information for use by EPA only if EPA first determines that the information is entitled to confidential treatment under this subpart; and

(4) The EPA office which desires submission of the information has requested that the EPA legal office issue a determination under this section.

(b) The EPA office requesting an advance determination under this section shall—

(1) Arrange to have the business furnish directly to the EPA legal office a copy of the information (or, where feasible, a description of the nature of the information sufficient to allow a determination to be made), as well as the business's comments concerning the matters addressed in §2.204(e)(4), excluding, however, matters addressed in §2.204 (e)(4)(iii) and (e)(4)(iv); and

(2) Furnish to the EPA legal office the materials referred to in §2.204(f) (3), (7), (8), and (9).

(c) In making a determination under this section, the EPA legal office shall first determine whether or not the information would constitute voluntarily submitted information under §2.201(i). If the information would constitute voluntarily submitted information, the legal office shall further determine whether the information is entitled to confidential treatment.

(d) If the EPA legal office determines that the information would not constitute voluntarily submitted information, or determines that it would constitute voluntarily submitted information but would not be entitled to confidential treatment, it shall so inform the business and the EPA office which requested the determination, stating the basis of the determination, and shall return to the business all copies of the information which it may have received from the business (except that if a request under 5 U.S.C. 552 for release of the information is received while the EPA legal office is in possession of the information, the legal office shall retain a copy of the information, but shall not disclose it unless ordered by a Federal court to do so). The legal office shall not disclose the information to any other EPA office or employee and shall not use the information for any purpose except the determination under this section, unless otherwise directed by a Federal court.

(e) If the EPA legal office determines that the information would constitute voluntarily submitted information and that it is entitled to confidential treatment, it shall so inform the EPA office which requested the determination and the business which submitted it, and shall forward the information to the EPA office which requested the determination.

§2.207 Class determinations.

(a) The General Counsel may make and issue a class determination under this section if he finds that—

(1) EPA possesses, or is obtaining, related items of business information;

(2) One or more characteristics common to all such items of information will necessarily result in identical treatment for each such item under one or more of the provisions in this subpart, and that it is therefore proper to treat all such items as a class for one or more purposes under this subpart; and

(3) A class determination would serve a useful purpose.

(b) A class determination shall clearly identify the class of information to which it pertains.

(c) A class determination may state that all of the information in the class—

(1) Is, or is not, voluntarily submitted information under §2.201(i);

(2) Is, or is not, governed by a particular section of this subpart, or by a particular set of substantive criteria under this subpart;

(3) Fails to satisfy one or more of the applicable substantive criteria, and is therefore ineligible for confidential treatment;

(4) Satisfies one or more of the applicable substantive criteria; or

(5) Satisfies one or more of the applicable substantive criteria during a certain period, but will be ineligible for confidential treatment thereafter.

(d) The purpose of a class determination is simply to make known the Agency's position regarding the manner in which information within the class will be treated under one or more of the provisions of this subpart. Accordingly, the notice of opportunity to submit comments referred to in §2.204(d)(1)(ii) and §2.205(b), and the list of materials required to be furnished to the EPA legal office under

§2.204(d)(1)(iii), may be modified to reflect the fact that the class determination has made unnecessary the submission of materials pertinent to one or more issues. Moreover, in appropriate cases, action based on the class determination may be taken under §2.204(b)(1), §2.204(d), §2.205(d), or §2.206. However, the existence of a class determination shall not, of itself, affect any right a business may have to receive any notice under §2.204(d)(2) or §2.205(f).

§2.208 Substantive criteria for use in confidentiality determinations.

Determinations issued under §§2.204 through 2.207 shall hold that business information is entitled to confidential treatment for the benefit of a particular business if—

(a) The business has asserted a business confidentiality claim which has not expired by its terms, nor been waived nor withdrawn;

(b) The business has satisfactorily shown that it has taken reasonable measures to protect the confidentiality of the information, and that it intends to continue to take such measures;

(c) The information is not, and has not been, reasonably obtainable without the business's consent by other persons (other than governmental bodies) by use of legitimate means (other than discovery based on a showing of special need in a judicial or quasi-judicial proceeding);

(d) No statute specifically requires disclosure of the information; and

(e) Either—

(1) The business has satisfactorily shown that disclosure of the information is likely to cause substantial harm to the business's competitive position; or

(2) The information is voluntarily submitted information (see §2.201(i)), and its disclosure would be likely to impair the Government's ability to obtain necessary information in the future.

§2.209 Disclosure in special circumstances.

(a) *General.* Information which, under this subpart, is not available to the public may nonetheless be disclosed to the persons, and in the circumstances, described by paragraphs (b) through (g) of this section. (This section shall not be construed to restrict the disclosure of information which has been determined to be available to the public. However, business information for which a claim of confidentiality has been asserted shall be treated as being entitled to confidential treatment until there has been a determination in accordance with the procedures of this subpart that the information is not entitled to confidential treatment.)

(b) *Disclosure to Congress or the Comptroller General.* (1) Upon receipt of a written request by the Speaker of the House, President of the Senate, chairman of a committee or subcommittee, or the Comptroller General, as appropriate, EPA will disclose business information to either House of Congress, to a committee or subcommittee of Congress, or to the Comptroller General, unless a statute forbids such disclosure.

(2) If the request is for business information claimed as confidential or determined to be confidential, the EPA office processing the request shall provide notice to each affected business of the type of information disclosed and to whom it is disclosed. Notice shall be given at least ten days prior to disclosure, except where it is not possible to provide notice ten days in advance of any date established by the requesting body for responding to the request. Where ten days advance notice cannot be given, as much advance notice as possible shall be provided. Where notice cannot be given before the date established by the requesting body for responding to the request, notice shall be given as promptly after disclosure as possible. Such notice may be given by notice published in the FEDERAL REGISTER or by letter sent by certified mail, return receipt requested, or telegram. However, if the requesting body asks in writing that no notice under this subsection be given, EPA will give no notice.

(3) At the time EPA discloses the business information, EPA will inform the requesting body of any unresolved business confidentiality claim known to cover the information and of any determination under this subpart that

the information is entitled to confidential treatment.

(c) *Disclosure to other Federal agencies.* EPA may disclose business information to another Federal agency if—

(1) EPA receives a written request for disclosures of the information from a duly authorized officer or employee of the other agency or on the initiative of EPA when such disclosure is necessary to enable the other agency to carry out a function on behalf of EPA;

(2) The request, if any, sets forth the official purpose for which the information is needed;

(3) When the information has been claimed as confidential or has been determined to be confidential, the responsible EPA office provides notice to each affected business of the type of information to be disclosed and to whom it is to be disclosed. At the discretion of the office, such notice may be given by notice published in the FEDERAL REGISTER at least 10 days prior to disclosure, or by letter sent by certified mail return receipt requested or telegram either of which must be received by the affected business at least 10 days prior to disclosure. However, no notice shall be required when EPA furnishes business information to another Federal agency to perform a function on behalf of EPA, including but not limited to—

(i) Disclosure to the Department of Justice for purposes of investigation or prosecution of civil or criminal violations of Federal law related to EPA activities;

(ii) Disclosure to the Department of Justice for purposes of representing EPA in any matter; or

(iii) Disclosure to any Federal agency for purposes of performing an EPA statutory function under an interagency agreement.

(4) EPA notifies the other agency of any unresolved business confidentiality claim covering the information and of any determination under this subpart that the information is entitled to confidential treatment, and that further disclosure of the information may be a violation of 18 U.S.C. 1905; and

(5) The other agency agrees in writing not to disclose further any information designated as confidential unless—

(i) The other agency has statutory authority both to compel production of the information and to make the proposed disclosure, and the other agency has, prior to disclosure of the information to anyone other than its officers and employees, furnished to each affected business at least the same notice to which the affected business would be entitled under this subpart;

(ii) The other agency has obtained the consent of each affected business to the proposed disclosure; or

(iii) The other agency has obtained a written statement from the EPA General Counsel or an EPA Regional Counsel that disclosure of the information would be proper under this subpart.

(d) *Court-ordered disclosure.* EPA may disclose any business information in any manner and to the extent ordered by a Federal court. Where possible, and when not in violation of a specific directive from the court, the EPA office disclosing information claimed as confidential or determined to be confidential shall provide as much advance notice as possible to each affected business of the type of information to be disclosed and to whom it is to be disclosed, unless the affected business has actual notice of the court order. At the discretion of the office, subject to any restrictions by the court, such notice may be given by notice in the FEDERAL REGISTER, letter sent by certified mail return receipt requested, or telegram.

(e) *Disclosure within EPA.* An EPA office, officer, or employee may disclose any business information to another EPA office, officer, or employee with an official need for the information.

(f) *Disclosure with consent of business.* EPA may disclose any business information to any person if EPA has obtained the prior consent of each affected business to such disclosure.

(g) *Record of disclosures to be maintained.* Each EPA office which discloses information to Congress, a committee or subcommittee of Congress, the Comptroller General, or another Federal agency under the authority of paragraph (b) or (c) of this section, shall maintain a record of the fact of such disclosure for a period of not less than 36 months after such disclosure. Such a record, which may be in the form of a log, shall show the name of

the affected businesses, the date of disclosure, the person or body to whom disclosure was made, and a description of the information disclosed.

[41 FR 36902, Sept. 1, 1976, as amended at 43 FR 40000, Sept. 8, 1978; 50 FR 51661, Dec. 18, 1985]

§2.210 Nondisclosure for reasons other than business confidentiality or where disclosure is prohibited by other statute.

(a) Information which is not entitled to confidential treatment under this subpart shall be made available to the public (using the procedures set forth in §§2.204 and 2.205) if its release is requested under 5 U.S.C. 552, unless EPA determines (under subpart A of this part) that, for reasons other than reasons of business confidentiality, the information is exempt from mandatory disclosure and cannot or should not be made available to the public. Any such determination under subpart A shall be coordinated with actions taken under this subpart for the purpose of avoiding delay in responding to requests under 5 U.S.C. 552.

(b) Notwithstanding any other provision of this subpart, if any statute not cited in this subpart appears to require EPA to give confidential treatment to any business information for reasons of business confidentiality, the matter shall be referred promptly to an EPA legal office for resolution. Pending resolution, such information shall be treated as if it were entitled to confidential treatment.

§2.211 Safeguarding of business information; penalty for wrongful disclosure.

(a) No EPA officer or employee may disclose, or use for his or her private gain or advantage, any business information which came into his or her possession, or to which he or she gained access, by virtue of his or her official position or employment, except as authorized by this subpart.

(b) Each EPA officer or employee who has custody or possession of business information shall take appropriate measures to properly safeguard such information and to protect against its improper disclosure.

(c) Violation of paragraph (a) or (b) of this section shall constitute grounds for dismissal, suspension, fine, or other adverse personnel action. Willful violation of paragraph (a) of this section may result in criminal prosecution under 18 U.S.C. 1905 or other applicable statute.

(d) Each contractor or subcontractor with the United States Government, and each employee of such contractor or subcontractor, who is furnished business information by EPA under §§2.301(h), §2.302(h), 2.304(h), 2.305(h), 2.306(j), 2.307(h), 2.308(i), or 2.310(h) shall use or disclose that information only as permitted by the contract or subcontract under which the information was furnished. Contractors or subcontractors shall take steps to properly safeguard business information including following any security procedures for handling and safeguarding business information which are contained in any manuals, procedures, regulations, or guidelines provided by EPA. Any violation of this paragraph shall constitute grounds for suspension or debarment of the contractor or subcontractor in question. A willful violation of this paragraph may result in criminal prosecution.

[41 FR 36902, Sept. 1, 1976, as amended at 50 FR 51662, Dec. 18, 1985; 58 FR 461, Jan. 5, 1993]

§2.212 Establishment of control offices for categories of business information.

(a) The Administrator, by order, may establish one or more mutually exclusive categories of business information, and may designate for each such category an EPA office (hereinafter referred to as a *control office*) which shall have responsibility for taking actions (other than actions required to be taken by an EPA legal office) with respect to all information within such category.

(b) If a control office has been assigned responsibility for a category of business information, no other EPA office, officer, or employee may make available to the public (or otherwise disclose to persons other than EPA officers and employees) any information

in that category without first obtaining the concurrence of the control office. Requests under 5 U.S.C. 552 for release of such information shall be referred to the control office.

(c) A control office shall take the actions and make the determinations required by § 2.204 with respect to all information in any category for which the control office has been assigned responsibility.

(d) A control office shall maintain a record of the following, with respect to items of business information in categories for which it has been assigned responsibility:

(1) Business confidentiality claims;

(2) Comments submitted in support of claims;

(3) Waivers and withdrawals of claims;

(4) Actions and determinations by EPA under this subpart;

(5) Actions by Federal courts; and

(6) Related information concerning business confidentiality.

§ 2.213 Designation by business of addressee for notices and inquiries.

(a) A business which wishes to designate a person or office as the proper addressee of communications from EPA to the business under this subpart may do so by furnishing in writing to the Freedom of Information Officer (A–101), Environmental Protection Agency, 401 M St. SW., Washington, DC 20460, the following information: The name and address of the business making the designation; the name, address, and telephone number of the designated person or office; and a request that EPA inquiries and communications (oral and written) under this subpart, including inquiries and notices which require reply within deadlines if the business is to avoid waiver of its rights under this subpart, be furnished to the designee pursuant to this section. Only one person or office may serve at any one time as a business's designee under this subpart.

(b) If a business has named a designee under this section, the following EPA inquiries and notices to the business shall be addressed to the designee:

(1) Inquiries concerning a business's desire to assert a business confidentiality claim, under § 2.204(c)(2)(i)(A);

(2) Notices affording opportunity to substantiate confidentiality claims, under § 2.204(d)(1) and § 2.204(e);

(3) Inquires concerning comments, under § 2.205(b)(4);

(4) Notices of denial of confidential treatment and proposed disclosure of information, under § 2.205(f);

(5) Notices concerning shortened comment and/or waiting periods under § 2.205(g);

(6) Notices concerning modifications or overrulings of prior determinations, under § 2.205(h);

(7) Notices to affected businesses under §§ 2.301(g) and 2.301(h) and analogous provisions in §§ 2.302, 2.303, 2.304, 2.305, 2.306, 2.307, and 2.308; and

(8) Notices to affected businesses under § 2.209.

(c) The Freedom of Information Officer shall, as quickly as possible, notify all EPA offices that may possess information submitted by the business to EPA, the Regional Freedom of Information Offices, the Office of General Counsel, and the offices of Regional Counsel of any designation received under this section. Businesses making designations under this section should bear in mind that several working days may be required for dissemination of this information within EPA and that some EPA offices may not receive notice of such designations.

[41 FR 36902, Sept. 1, 1976, as amended at 43 FR 40001, Sept. 8, 1978]

§ 2.214 Defense of Freedom of Information Act suits; participation by affected business.

(a) In making final confidentiality determinations under this subpart, the EPA legal office relies to a large extent upon the information furnished by the affected business to substantiate its claim of confidentiality. The EPA legal office may be unable to verify the accuracy of much of the information submitted by the affected business.

(b) If the EPA legal office makes a final confidentiality determination under this subpart that certain business information is entitled to confidential treatment, and EPA is sued by a requester under the Freedom of Information Act for disclosure of that information, EPA will:

(1) Notify each affected business of the suit within 10 days after service of the complaint upon EPA;

(2) Where necessary to preparation of EPA's defense, call upon each affected business to furnish assistance; and

(3) Not oppose a motion by any affected business to intervene as a party to the suit under rule 24(b) of the Federal Rules of Civil Procedure.

(c) EPA will defend its final confidentiality determination, but EPA expects the affected business to cooperate to the fullest extent possible in this defense.

[43 FR 40001, Sept. 8, 1978]

§2.215 Confidentiality agreements.

(a) No EPA officer, employee, contractor, or subcontractor shall enter into any agreement with any affected business to keep business information confidential unless such agreement is consistent with this subpart. No EPA officer, employee, contractor, or subcontractor shall promise any affected business that business information will be kept confidential unless the promise is consistent with this subpart.

(b) If an EPA office has requested information from a State, local, or Federal agency and the agency refuses to furnish the information to EPA because the information is or may constitute confidential business information, the EPA office may enter into an agreement with the agency to keep the information confidential, notwithstanding the provisions of this subpart. However, no such agreement shall be made unless the General Counsel determines that the agreement is necessary and proper.

(c) To determine that an agreement proposed under paragraph (b) of this section is necessary, the General Counsel must find:

(1) The EPA office requesting the information needs the information to perform its functions;

(2) The agency will not furnish the information to EPA without an agreement by EPA to keep the information confidential; and

(3) Either:

(i) EPA has no statutory power to compel submission of the information directly from the affected business, or

(ii) While EPA has statutory power to compel submission of the information directly from the affected business, compelling submission of the information directly from the business would—

(A) Require time in excess of that available to the EPA office to perform its necessary work with the information,

(B) Duplicate information already collected by the other agency and overly burden the affected business, or

(C) Overly burden the resources of EPA.

(d) To determine that an agreement proposed under paragraph (b) of this section is proper, the General Counsel must find that the agreement states—

(1) The purpose for which the information is required by EPA;

(2) The conditions under which the agency will furnish the information to EPA;

(3) The information subject to the agreement;

(4) That the agreement does not cover information acquired by EPA from another source;

(5) The manner in which EPA will treat the information; and

(6) That EPA will treat the information in accordance with the agreement subject to an order of a Federal court to disclose the information.

(e) EPA will treat any information acquired pursuant to an agreement under paragraph (b) of this section in accordance with the procedures of this subpart except where the agreement specifies otherwise.

[43 FR 40001, Sept. 8, 1978]

§§2.216—2.300 [Reserved]

§2.301 Special rules governing certain information obtained under the Clean Air Act.

(a) *Definitions.* For the purpose of this section:

(1) *Act* means the Clean Air Act, as amended, 42 U.S.C. 7401 *et seq.*

(2)(i) *Emission data* means, with reference to any source of emission of any substance into the air—

(A) Information necessary to determine the identity, amount, frequency, concentration, or other characteristics (to the extent related to air quality) of

any emission which has been emitted by the source (or of any pollutant resulting from any emission by the source), or any combination of the foregoing;

(B) Information necessary to determine the identity, amount, frequency, concentration, or other characteristics (to the extent related to air quality) of the emissions which, under an applicable standard or limitation, the source was authorized to emit (including, to the extent necessary for such purposes, a description of the manner or rate of operation of the source); and

(C) A general description of the location and/or nature of the source to the extent necessary to identify the source and to distinguish it from other sources (including, to the extent necessary for such purposes, a description of the device, installation, or operation constituting the source).

(ii) Notwithstanding paragraph (a)(2)(i) of this section, the following information shall be considered to be *emission data* only to the extent necessary to allow EPA to disclose publicly that a source is (or is not) in compliance with an applicable standard or limitation, or to allow EPA to demonstrate the feasibility, practicability, or attainability (or lack thereof) of an existing or proposed standard or limitation:

(A) Information concerning research, or the results of research, on any project, method, device or installation (or any component thereof) which was produced, developed, installed, and used only for research purposes; and

(B) Information concerning any product, method, device, or installation (or any component thereof) designed and intended to be marketed or used commercially but not yet so marketed or used.

(3) *Standard or limitation* means any emission standard or limitation established or publicly proposed pursuant to the Act or pursuant to any regulation under the Act.

(4) *Proceeding* means any rulemaking, adjudication, or licensing conducted by EPA under the Act or under regulations which implement the Act, except for determinations under this subpart.

(5) *Manufacturer* has the meaning given it in section 216(1) of the Act, 42 U.S.C. 7550(1).

(b) *Applicability*. (1) This section applies to business information which was—

(i) Provided or obtained under section 114 of the Act, 42 U.S.C. 7414, by the owner or operator of any stationary source, for the purpose (A) of developing or assisting in the development of any implementation plan under section 110 or 111(d) of the Act, 42 U.S.C. 7410, 7411(d), any standard of performance under section 111 of the Act, 42 U.S.C. 7411, or any emission standard under section 112 of the Act, 42 U.S.C. 7412, (B) of determining whether any person is in violation of any such standard or any requirement of such a plan, or (C) of carrying out any provision of the Act (except a provision of Part II of the Act with respect to a manufacturer of new motor vehicles or new motor vehicle engines);

(ii) Provided or obtained under section 208 of the Act, 42 U.S.C. 7542, for the purpose of enabling the Administrator to determine whether a manufacturer has acted or is acting in compliance with the Act and regulations under the Act, or provided or obtained under section 206(c) of the Act, 42 U.S.C. 7525(c); or

(iii) Provided in response to a subpoena for the production of papers, books, or documents issued under the authority of section 307(a) of the Act, 42 U.S.C. 7607(a).

(2) Information will be considered to have been provided or obtained under section 114 of the Act if it was provided in response to a request by EPA made for any of the purposes stated in section 114, or if its submission could have been required under section 114, regardless of whether section 114 was cited as the authority for any request for the information, whether an order to provide the information was issued under section 113(a) of the Act, 42 U.S.C. 7413(a), whether an action was brought under section 113(b) of the Act, 42 U.S.C. 7413(b), or whether the information was provided directly to EPA or through some third person.

(3) Information will be considered to have been provided or obtained under section 208 of the Act if it was provided

in response to a request by EPA made for any of the purposes stated in section 208, or if its submission could have been required under section 208, regardless of whether section 208 was cited as the authority for any request for the information, whether an action was brought under section 204 of the Act, 42 U.S.C. 7523, or whether the information was provided directly to EPA or through some third person.

(4) Information will be considered to have been provided or obtained under section 206(c) of the Act if it was provided in response to a request by EPA made for any of the purposes stated in section 206(c), or if its submission could have been required under section 206(c) regardless of whether section 206(c) was cited as authority for any request for the information, whether an action was brought under section 204 of the Act, 42 U.S.C. 7523, or whether the information was provided directly to EPA or through some third person.

(5) Information will be considered to have been provided or obtained under section 307(a) of the Act if it was provided in response to a subpoena issued under section 307(a), or if its production could have been required by subpoena under section 307(a), regardless of whether section 307(a) was cited as the authority for any request for the information, whether a subpoena was issued by EPA, whether a court issued an order under section 307(a), or whether the information was provided directly to EPA or through some third person.

(c) *Basic rules which apply without change.* Sections 2.201 through 2.207, § 2.209 and §§ 2.211 through 2.215 apply without change to information to which this section applies.

(d) [Reserved]

(e) *Substantive criteria for use in confidentiality determinations.* Section 2.208 applies to information to which this section applies, except that information which is emission data, a standard or limitation, or is collected pursuant to section 211(b)(2)(A) of the Act is not eligible for confidential treatment. No information to which this section applies is voluntarily submitted information.

(f) *Availability of information not entitled to confidential treatment.* Section 2.210 does not apply to information to which this section applies. Emission data, standards or limitations, and any other information provided under section 114 or 208 of the Act which is determined under this subpart not to be entitled to confidential treatment, shall be available to the public notwithstanding any other provision of this part. Emission data and standards or limitations provided in response to a subpoena issued under section 307(a) of the Act shall be available to the public notwithstanding any other provision of this part. Information (other than emission data and standards or limitations) provided in response to a subpoena issued under section 307(a) of the Act, which is determined under this subpart not to be entitled to confidential treatment, shall be available to the public, unless EPA determines that the information is exempt from mandatory disclosure under 5 U.S.C. 552(b) for reasons other than reasons of business confidentiality and cannot or should not be made available to the public.

(g) *Disclosure of information relevant to a proceeding.* (1) Under sections 114, 208 and 307 of the Act, any information to which this section applies may be released by EPA because of the relevance of the information to a proceeding, notwithstanding the fact that the information otherwise might be entitled to confidential treatment under this subpart. Release of information because of its relevance to a proceeding shall be made only in accordance with this paragraph (g).

(2) In connection with any proceeding other than a proceeding involving a decision by a presiding officer after an evidentiary or adjudicatory hearing, information to which this section applies which may be entitled to confidential treatment may be made available to the public under this paragraph (g)(2). No information shall be made available to the public under this paragraph (g)(2) until any affected business has been informed that EPA is considering making the information available to the public under this paragraph (g)(2) in connection with an identified proceeding, and has afforded the business a reasonable period for comment (such notice and opportunity to comment may be afforded in connection

with the notice prescribed by § 2.204(d)(1) and § 2.204(e)). Information may be made available to the public under this paragraph (g)(2) only if, after consideration of any timely comments submitted by the business, the General Counsel determines that the information is relevant to the subject of the proceeding and the EPA office conducting the proceeding determines that the public interest would be served by making the information available to the public. Any affected business shall be given at least 5 days' notice by the General Counsel prior to making the information available to the public.

(3) In connection with any proceeding involving a decision by a presiding officer after an evidentiary or adjudicatory hearing, information to which this section applies which may be entitled to confidential treatment may be made available to the public, or to one or more parties of record to the proceeding, upon EPA's initiative, under this paragraph (g)(3). An EPA office proposing disclosure of information under this paragraph (g)(3), shall so notify the presiding officer in writing. Upon receipt of such a notification, the presiding officer shall notify each affected business that disclosure under this paragraph (g)(3) has been proposed, and shall afford each such business a period for comment found by the presiding officer to be reasonable under the circumstances. Information may be disclosed under this paragraph (g)(3) only if, after consideration of any timely comments submitted by the business, the EPA office determines in writing that, for reasons directly associated with the conduct of the proceeding, the contemplated disclosure would serve the public interest, and the presiding officer determines in writing that the information is relevant to a matter in controversy in the proceeding. The presiding officer may condition disclosure of the information to a party of record on the making of such protective arrangements and commitments as he finds to be warranted. Disclosure to one or more parties of record, under protective arrangements or commitments, shall not, of itself, affect the eligibility of information for confidential treatment under the other provisions of this subpart. Any affected business shall be given at least 5 days notice by the presiding officer prior to making the information available to the public or to one or more of the parties of record to the proceeding.

(4) In connection with any proceeding involving a decision by a presiding officer after an evidentiary or adjudicatory hearing, information to which this section applies may be made available to one or more parties of record to the proceeding, upon request of a party, under this paragraph (g)(4). A party of record seeking disclosure of information shall direct his request to the presiding officer. Upon receipt of such a request, the presiding officer shall notify each affected business that disclosure under this paragraph (g)(4) has been requested, and shall afford each such business a period for comment found by the presiding officer to be reasonable under the circumstances. Information may be disclosed to a party of record under this paragraph (g)(4) only if, after consideration of any timely comments submitted by the business, the presiding officer determines in writing that (i) the party of record has satisfactorily shown that with respect to a significant matter which is in controversy in the proceeding, the party's ability to participate effectively in the proceeding will be significantly impaired unless the information is disclosed to him, and (ii) any harm to an affected business that would result from the disclosure is likely to be outweighed by the benefit to the proceeding and to the public interest that would result from the disclosure. The presiding officer may condition disclosure of the information to a party of record on the making of such protective arrangements and commitments as he finds to be warranted. Disclosure to one or more parties of record, under protective arrangements or commitments, shall not, of itself, affect the eligibility of information to confidential treatment under the other provisions of this subpart. Any affected business shall be given at least 5 days notice by the presiding officer prior to making the information available to one or more of the parties of record to the proceeding.

(h) *Disclosure to authorized representatives.* (1) Under sections 114, 208 and 307(a) of the Act, EPA possesses authority to disclose to any authorized representative of the United States any information to which this section applies, notwithstanding the fact that the information might otherwise be entitled to confidential treatment under this subpart. Such authority may be exercised only in accordance with paragraph (h) (2) or (3) of this section.

(2)(i) A person under contract or subcontract to the United States government to perform work in support of EPA in connection with the Act or regulations which implement the Act may be considered an authorized representative of the United States for purposes of this paragraph (h). For purposes of this section, the term ''contract'' includes grants and cooperative agreements under the Environmental Programs Assistance Act of 1984 (Pub. L. 98–313), and the term ''contractor'' includes grantees and cooperators under the Environmental Programs Assistance Act of 1984. Subject to the limitations in this paragraph (h)(2), information to which this section applies may be disclosed:

(A) To a contractor or subcontractor with EPA, if the EPA program office managing the contract first determines in writing that such disclosure is necessary in order that the contractor or subcontractor may carry out the work required by the contract or subcontract; or

(B) To a contractor or subcontractor with an agency other than EPA, if the EPA program office which provides the information to that agency, contractor, or subcontractor first determines in writing, in consultation with the General Counsel, that such disclosure is necessary in order that the contractor or subcontractor may carry out the work required by the contract or subcontract.

(ii) No information shall be disclosed under this paragraph (h)(2), unless this contract or subcontract in question provides:

(A) That the contractor or subcontractor and the contractor's or subcontractor's employees shall use the information only for the purpose of carrying out the work required by the contract or subcontract, shall refrain from disclosing the information to anyone other than EPA without the prior written approval of each affected business or of an EPA legal office and shall return to EPA all copies of the information (and any abstracts or extracts therefrom) upon request by the EPA program office, whenever the information is no longer required by the contractor or subcontractor for the performance of the work required under the contract or subcontract, or upon completion of the contract or subcontract (where the information was provided to the contractor or subcontractor by an agency other than EPA, the contractor may disclose or return the information to that agency);

(B) That the contractor or subcontractor shall obtain a written agreement to honor such terms of the contract or subcontract from each of the contractor's or subcontractor's employees who will have access to the information, before such employee is allowed such access; and

(C) That the contractor or subcontractor acknowledges and agrees that the contract or subcontract provisions concerning the use and disclosure of business information are included for the benefit of, and shall be enforceable by, both the United States government and any affected business having an interest in information concerning it supplied to the contractor or subcontractor by the United States government under the contract or subcontract.

(iii) No information shall be disclosed under this paragraph (h)(2) until each affected business has been furnished notice of the contemplated disclosure by the EPA program office and has been afforded a period found reasonable by that office (not less than 5 working days) to submit its comments. Such notice shall include a description of the information to be disclosed, the identity of the contractor or subcontractor, the contract or subcontract number, if any, and the purposes to be served by the disclosure.

(iv) The EPA program office shall prepare a record of each disclosure under this paragraph (h)(2), showing the contractor or subcontractor, the contract or subcontract number, the

information disclosed, the date(s) of disclosure, and each affected business. The EPA program office shall maintain the record of disclosure and the determination of necessity prepared under paragraph (h)(2)(i) of this section for a period of not less than 36 months after the date of the disclosure.

(3) A state or local governmental agency which has duties or responsibilities under the Act, or under regulations which implement the Act, may be considered an authorized representative of the United States for purposes of this paragraph (h). Information to which this section applies may be furnished to such an agency at the agency's written request, but only if—

(i) The agency has first furnished to the EPA office having custody of the information a written opinion from the agency's chief legal officer or counsel stating that under applicable state or local law the agency has the authority to compel a business which possesses such information to disclose it to the agency, or

(ii) Each affected business is informed of those disclosures under this paragraph (h)(3) which pertain to it, and the agency has shown to the satisfaction of an EPA legal office that the agency's use and disclosure of such information will be governed by state or local law and procedures which will provide adequate protection to the interests of affected businesses.

[41 FR 36902, Sept. 1, 1976, as amended at 43 FR 40002, Sept. 8, 1978; 43 FR 42251, Sept. 20, 1978; 50 FR 51662, Dec. 18, 1985; 58 FR 461, Jan. 5, 1993; 58 FR 5061, Jan 19, 1993; 58 FR 7189, Feb. 5, 1993]

§ 2.302 Special rules governing certain information obtained under the Clean Water Act.

(a) *Definitions.* For the purposes of this section:

(1) *Act* means the Clean Water Act, as amended, 33 U.S.C. 1251 *et seq.*

(2)(i) *Effluent data* means, with reference to any source of discharge of any pollutant (as that term is defined in section 502(6) of the Act, 33 U.S.C. 1362 (6))—

(A) Information necessary to determine the identity, amount, frequency, concentration, temperature, or other characteristics (to the extent related to water quality) of any pollutant which has been discharged by the source (or of any pollutant resulting from any discharge from the source), or any combination of the foregoing;

(B) Information necessary to determine the identity, amount, frequency, concentration, temperature, or other characteristics (to the extent related to water quality) of the pollutants which, under an applicable standard or limitation, the source was authorized to discharge (including, to the extent necessary for such purpose, a description of the manner or rate of operation of the source); and

(C) A general description of the location and/or nature of the source to the extent necessary to identify the source and to distinguish it from other sources (including, to the extent necessary for such purposes, a description of the device, installation, or operation constituting the source).

(ii) Notwithstanding paragraph (a)(2)(i) of this section, the following information shall be considered to be *effluent data* only to the extent necessary to allow EPA to disclose publicly that a source is (or is not) in compliance with an applicable standard or limitation, or to allow EPA to demonstrate the feasibility, practicability, or attainability (or lack thereof) of an existing or proposed standard or limitation:

(A) Information concerning research, or the results of research, on any product, method, device, or installation (or any component thereof) which was produced, developed, installed, and used only for research purposes; and

(B) Information concerning any product, method, device, or installation (or any component thereof) designed and intended to be marketed or used commercially but not yet so marketed or used.

(3) *Standard or limitation* means any prohibition, any effluent limitation, or any toxic, pre-treatment or new source performance standard established or publicly proposed pursuant to the Act or pursuant to regulations under the Act, including limitations or prohibitions in a permit issued or proposed by EPA or by a State under section 402 of the Act, 33 U.S.C. 1342.

(4) *Proceeding* means any rulemaking, adjudication, or licensing conducted by EPA under the Act or under regulations which implement the Act, except for determinations under this part.

(b) *Applicability.* (1) This section applies only to business information—

(i) Provided to or obtained by EPA under section 308 of the Act, 33 U.S.C. 1318, by or from the owner or operator of any point source, for the purpose of carrying out the objective of the Act (including but not limited to developing or assisting in the development of any standard or limitation under the Act, or determining whether any person is in violation of any such standard or limitation); or

(ii) Provided to or obtained by EPA under section 509(a) of the Act, 33 U.S.C. 1369(a).

(2) Information will be considered to have been provided or obtained under section 308 of the Act if it was provided in response to a request by EPA made for any of the purposes stated in section 308, or if its submission could have been required under section 308, regardless of whether section 308 was cited as the authority for any request for the information, whether an order to provide the information was issued under section 309(a)(3) of the Act, 33 U.S.C. 1319(a)(3), whether a civil action was brought under section 309(b) of the Act, 33 U.S.C. 1319(b), and whether the information was provided directly to EPA or through some third person.

(3) Information will be considered to have been provided or obtained under section 509(a) of the Act if it was provided in response to a subpoena issued under section 509(a), or if its production could have been required by subpoena under section 509(a), regardless of whether section 509(a) was cited as the authority for any request for the information, whether a subpoena was issued by EPA, whether a court issued an order under section 307(a), or whether the information was provided directly to EPA or through some third person.

(4) This section specifically does not apply to information obtained under section 310(d) or 312(g)(3) of the Act, 33 U.S.C. 1320(d), 1322(g)(3).

(c) *Basic rules which apply without change.* Sections 2.201 through 2.207, 2.209, 2.211 through 2.215 apply without change to information to which this section applies.

(d) [Reserved]

(e) *Substantive criteria for use in confidentiality determinations.* Section 2.208 applies to information to which this section applies, except that information which is effluent data or a standard or limitation is not eligible for confidential treatment. No information to which this section applies is voluntarily submitted information.

(f) *Availability of information not entitled to confidential treatment.* Section 2.210 does not apply to information to which this section applies. Effluent data, standards or limitations, and any other information provided or obtained under section 308 of the Act which is determined under this subpart not to be entitled to confidential treatment, shall be available to the public notwithstanding any other provision of this part. Effluent data and standards or limitations provided in response to a subpoena issued under section 509(a) of the Act shall be available to the public notwithstanding any other provision of this part. Information (other than effluent data and standards or limitations) provided in response to a subpoena issued under section 509(a) of the Act, which is determined under this subpart not to be entitled to confidential treatment, shall be available to the public, unless EPA determines that the information is exempt from mandatory disclosure under 5 U.S.C. 552(b) for reasons other than reasons of business confidentiality and cannot or should not be made available to the public.

(g) *Disclosure of information relevant to a proceeding.* (1) Under sections 308 and 509(a) of the Act, any information to which this section applies may be released by EPA because of the relevance of the information to a proceeding, notwithstanding the fact that the information otherwise might be entitled to confidential treatment under this subpart. Release of information to which this section applies because of its relevance to a proceeding shall be made only in accordance with this paragraph (g).

(2)–(4) The provisions of § 2.301(g) (2), (3), and (4) are incorporated by reference as paragraphs (g) (2), (3), and (4), respectively of this section.

(h) *Disclosure to authorized representatives.* (1) Under sections 308 and 509(a) of the Act, EPA possesses authority to disclose to any authorized representative of the United States any information to which this section applies, notwithstanding the fact that the information might otherwise be entitled to confidential treatment under this subpart. Such authority may be exercised only in accordance with paragraph (h)(2) or (h)(3) of this section.

(2)–(3) The provisions of § 2.301(h) (2) and (3) are incorporated by reference as paragraphs (h) (2) and (3), respectively, of this section.

[41 FR 36902, Sept. 1, 1976, as amended at 43 FR 40003, Sept. 8, 1978]

§ 2.303 Special rules governing certain information obtained under the Noise Control Act of 1972.

(a) *Definitions.* For the purposes of this section:

(1) *Act* means the Noise Control Act of 1972, 42 U.S.C. 4901 *et seq.*

(2) *Manufacturer* has the meaning given it in 42 U.S.C. 4902(6).

(3) *Product* has the meaning given it in 42 U.S.C. 4902(3).

(4) *Proceeding* means any rulemaking, adjudication, or licensing conducted by EPA under the Act or under regulations which implement the Act, except for determinations under this subpart.

(b) *Applicability.* This section applies only to information provided to or obtained by EPA under section 13 of the Act, 42 U.S.C. 4912, by or from any manufacturer of any product to which regulations under section 6 or 8 of the Act (42 U.S.C. 4905, 4907) apply. Information will be deemed to have been provided or obtained under section 13 of the Act, if it was provided in response to a request by EPA made for the purpose of enabling EPA to determine whether the manufacturer has acted or is acting in compliance with the Act, or if its submission could have been required under section 13 of the Act, regardless of whether section 13 was cited as authority for the request, whether an order to provide such information was issued under section 11(d) of the Act, 42 U.S.C. 4910(d), and whether the information was provided directly to EPA by the manufacturer or through some third person.

(c) *Basic rules which apply without change.* Sections 2.201 through 2.207 and 2.209 through 2.215 apply without change to information to which this section applies.

(d) [Reserved]

(e) *Substantive criteria for use in confidentiality determinations.* Section 2.208 applies without change to information to which this section applies; however, no information to which this section applies is voluntarily submitted information.

(f) [Reserved]

(g) *Disclosure of information relevant to a proceeding.* (1) Under section 13 of the Act, any information to which this section applies may be released by EPA because of its relevance to a matter in controversy in a proceeding, notwithstanding the fact that the information otherwise might be entitled to confidential treatment under this subpart. Release of information because of its relevance to a proceeding shall be made only in accordance with this paragraph (g).

(2)–(4) The provisions of § 2.301(g) (2), (3), and (4) are incorporated by reference as paragraphs (g) (2), (3), and (4), respectively, of this section.

[41 FR 36902, Sept. 1, 1976, as amended at 43 FR 40003, Sept. 8, 1978]

§ 2.304 Special rules governing certain information obtained under the Safe Drinking Water Act.

(a) *Definitions.* For the purposes of this section:

(1) *Act* means the Safe Drinking Water Act, 42 U.S.C. 300f *et seq.*

(2) *Contaminant* means any physical, chemical, biological, or radiological substance or matter in water.

(3) *Proceeding* means any rulemaking, adjudication, or licensing process conducted by EPA under the Act or under regulations which implement the Act, except for any determination under this part.

(b) *Applicability.* (1) This section applies only to information—

(i) Which was provided to or obtained by EPA pursuant to a requirement of a

regulation which was issued by EPA under the Act for the purpose of—

(A) Assisting the Administrator in establishing regulations under the Act;

(B) Determining whether the person providing the information has acted or is acting in compliance with the Act; or

(C) Administering any program of financial assistance under the Act; and

(ii) Which was provided by a person—

(A) Who is a supplier of water, as defined in section 1401(5) of the Act, 42 U.S.C. 300f(5);

(B) Who is or may be subject to a primary drinking water regulation under section 1412 of the Act, 42 U.S.C. 300g–1;

(C) Who is or may be subject to an applicable underground injection control program, as defined in section 1422(d) of the Act, 42 U.S.C.300h–1(d);

(D) Who is or may be subject to the permit requirements of section 1424(b) of the Act, 42 U.S.C. 300h–3(b);

(E) Who is or may be subject to an order issued under section 1441(c) of the Act, 42 U.S.C. 300j(c); or

(F) Who is a grantee, as defined in section 1445(e) of the Act, 42 U.S.C. 300j–4(e).

(2) This section applies to any information which is described by paragraph (b)(1) of this section if it was provided in response to a request by EPA or its authorized representative (or by a State agency administering any program under the Act) made for any purpose stated in paragraph (b)(1) of this section, or if its submission could have been required under section 1445 of the Act, 42 U.S.C. 300j–4, regardless of whether such section was cited in any request for the information, or whether the information was provided directly to EPA or through some third person.

(c) *Basic rules which apply without change.* Sections 2.201 through 2.207, 2.209, and 2.211 through 2.215 apply without change to information to which this section applies.

(d) [Reserved]

(e) *Substantive criteria for use in confidentiality determinations.* Section 2.208 applies to information to which this section applies, except that information which deals with the existence, absence, or level of contaminants in drinking water is not eligible for confidential treatment. No information to which this section applies is voluntarily submitted information.

(f) *Nondisclosure for reasons other than business confidentiality or where disclosure is prohibited by other statute.* Section 2.210 applies to information to which this section applies, except that information which deals with the existence, absence, or level of contaminants in drinking water shall be available to the public notwithstanding any other provision of this part.

(g) *Disclosure of information relevant to a proceeding.* (1) Under section 1445(d) of the Act, any information to which this section applies may be released by EPA because of the relevance of the information to a proceeding, notwithstanding the fact that the information otherwise might be entitled to confidential treatment under this subpart. Release of information to which this section applies because of its relevance to a proceeding shall be made only in accordance with this paragraph (g).

(2)–(4) The provisions of §2.301(g) (2), (3), (4) are incorporated by reference as paragraphs (g) (2), (3), and (4), respectively, of this section.

(h) *Disclosure to authorized representatives.* (1) Under section 1445(d) of the Act, EPA possesses authority to disclose to any authorized representative of the United States any information to which this section applies, notwithstanding the fact that the information otherwise might be entitled to confidential treatment under this subpart. Such authority may be exercised only in accordance with paragraph (h)(2) or (h)(3) of this section.

(2)–(3) The provisions of §2.301(h) (2) and (3) are incorporated by reference as paragraphs (h) (2) and (3), respectively, of this section.

[41 FR 36902, Sept. 1, 1976, as amended at 43 FR 40003, Sept. 8, 1978]

§2.305 Special rules governing certain information obtained under the Solid Waste Disposal Act, as amended.

(a) *Definitions.* For purposes of this section:

(1) *Act* means the Solid Waste Disposal Act, as amended, including amendments made by the Resource

Conservation and Recovery Act of 1976, as amended, 42 U.S.C. 6901 *et seq.*

(2) *Person* has the meaning given it in section 1004(15) of the Act, 42 U.S.C. 6903(15).

(3) *Hazardous waste* has the meaning given it in section 1004(5) of the Act, 42 U.S.C. 6903(5).

(4) *Proceeding* means any rulemaking, adjudication, or licensing conducted by EPA under the Act or under regulations which implement the Act including the issuance of administrative orders and the approval or disapproval of plans (e.g. closure plans) submitted by persons subject to regulation under the Act, but not including determinations under this subpart.

(b) *Applicability.* This section applies to information provided to or obtained by EPA under section 3001(b)(3)(B), 3007, or 9005 of the Act, 42 U.S.C 6921(b)(3)(B), 6927, or 6995. Information will be considered to have been provided or obtained under sections 3001(b)(3)(B), 3007, or 9005 of the Act if it was provided in response to a request from EDA made for any of the purposes stated in the Act or if its submission could have been required under those provisions of the Act regardless of whether a specific section was cited as the authority for any request for the information or whether the information was provide directly to EPA or through some third person.

(c) *Basic rules which apply without change.* Sections 2.201 through 2.207 and 2.209 through 2.215 apply without change to information to which this section applies.

(d) [Reserved]

(e) *Substantive criteria for use in confidentiality determinations.* Section 2.208 applies without change to information to which this section applies; however, no information to which this section applies is voluntarily submitted information.

(f) [Reserved]

(g) *Disclosure of information relevant in a proceeding.* (1) Under sections 3007(b) and 9005(b) of the Act (42 U.S.C. 6927(b) and 6995(b)), any information to which this section applies may be disclosed by EPA because of the relevance of the information in a proceeding under the Act, notwithstanding the fact that the information otherwise might be entitled to confidential treatment under this subpart. Disclosure of information to which this section applies because of its relevance in a proceeding shall be made only in accordance with this paragraph (g).

(2)–(4) The provisions of § 2.301(g) (2), (3), and (4) are incorporated by reference as paragraphs (g) (2), (3), and (4), respectively, of this section.

(h) *Disclosure to authorized representatives.* (1) Under sections 3001(b)(3)(B), 3007(b), and 9005(b) of the Act (42 U.S.C. 6921(b)(3)(B), 6927(b), and 6995(b)), EPA possesses authority to disclose to any authorized representative of the United States any information to which this section applies, notwithstanding the fact that the information might otherwise be entitled to confidential treatment under this subpart. Such authority may be exercised only in accordance with paragraph (h)(2) or (h)(3) of this section.

(2)–(3) The provisions of § 2.301(h) (2) and (3) are incorporated by reference as paragraphs (h) (2) and (3), respectively, of this section.

(4) At the time any information is furnished to a contractor, subcontractor, or state or local government agency under this paragraph (h), the EPA office furnishing the information to the contractor, subcontractor, or state or local government agency shall notify the contractor, subcontractor, or state or local government agency that the information may be entitled to confidential treatment and that any knowing and willful disclosure of the information may subject the contractor, subcontractor, or state or local government agency and its employees to penalties in section 3001(b)(3)(B), 3007(b)(2), or 9005(b)(1) of the Act (42 U.S.C. 6921(b)(3)(B), 6927(b), or 6995(b)).

[43 FR 40003, Sept. 8, 1978, as amended at 50 FR 51662, Dec. 18, 1985]

§ 2.306 Special rules governing certain information obtained under the Toxic Substances Control Act.

(a) *Definitions.* For the purposes of this section:

(1) *Act* means the Toxic Substances Control Act, 15 U.S.C. 2601 *et seq.*

(2) *Chemical substance* has the meaning given it in section 3(2) of the Act, 15 U.S.C. 2602(2).

(3)(i) *Health and safety data* means the information described in paragraphs (a)(3)(i) (A), (B), and (C) of this section with respect to any chemical substance or mixture offered for commercial distribution (including for test marketing purposes and for use in research and development), any chemical substance included on the inventory of chemical substances under section 8 of the Act (15 U.S.C. 2607), or any chemical substance or mixture for which testing is required under section 4 of the Act (15 U.S.C. 2603) or for which notification is required under section 5 of the Act (15 U.S.C. 2604).

(A) Any study of any effect of a chemical substance or mixture on health, on the environment, or on both, including underlying data and epidemiological studies; studies of occupational exposure to a chemical substance or mixture; and toxicological, clinical, and ecological studies of a chemical substance or mixture;

(B) Any test performed under the Act; and

(C) Any data reported to, or otherwise obtained by, EPA from a study described in paragraph (a)(3)(i)(A) of this section or a test described in paragraph (a)(3)(i)(B) of this section.

(ii) Notwithstanding paragraph (a)(3)(i) of this section, no information shall be considered to be *health and safety data* if disclosure of the information would—

(A) In the case of a chemical substance or mixture, disclose processes used in the manufacturing or processing the chemical substance or mixture or,

(B) In the case of a mixture, disclose the portion of the mixture comprised by any of the chemical substances in the mixture.

(4) [Reserved]

(5) *Mixture* has the meaning given it in section 3(8) of the Act, 15 U.S.C. 2602(8).

(6) *Proceeding* means any rulemaking, adjudication, or licensing conducted by EPA under the Act or under regulations which implement the Act, except for determinations under this subpart.

(b) *Applicability*. This section applies to all information submitted to EPA for the purpose of satisfying some requirement or condition of the Act or of regulations which implement the Act, including information originally submitted to EPA for some other purpose and either relied upon to avoid some requirement or condition of the Act or incorporated into a submission in order to satisfy some requirement or condition of the Act or of regulations which implement the Act. Information will be considered to have been provided under the Act if the information could have been obtained under authority of the Act, whether the Act was cited as authority or not, and whether the information was provided directly to EPA or through some third person.

(c) *Basic rules which apply without change.* Sections 2.201 through 2.203, 2.206, 2.207, and 2.210 through 2.215 apply without change to information to which this section applies.

(d) *Initial action by EPA office.* Section 2.204 applies to information to which this section applies, except that the provisions of paragraph (e)(3) of this section regarding the time allowed for seeking judicial review shall be reflected in any notice furnished to a business under § 2.204(d)(2).

(e) *Final confidentiality determination by EPA legal office.* Section 2.205 applies to information to which this section applies, except that—

(1) Notwithstanding § 2.205(i), the General Counsel (or his designee), rather than the regional counsel, shall make the determinations and take the actions required by § 2.205;

(2) In addition to the statement prescribed by the second sentence of § 2.205(f)(2), the notice of denial of a business confidentiality claim shall state that under section 20(a) of the Act, 15 U.S.C. 2619, the business may commence an action in an appropriate Federal district court to prevent disclosure.

(3) The following sentence is substituted for the third sentence of § 2.205(f)(2): ''With respect to EPA's implementation of the determination, the notice shall state that (subject to § 2.210) EPA will make the information available to the public on the thirty-first (31st) calendar day after the date of the business' receipt of the written notice (or on such later date as is established in lieu thereof under paragraph (f)(3) of this section), unless the

EPA legal office has first been notified of the business' commencement of an action in a Federal court to obtain judicial review of the determination and to obtain preliminary injunctive relief against disclosure.''; and

(4) Notwithstanding § 2.205(g), the 31 calendar day period prescribed by § 2.205(f)(2), as modified by paragraph (e)(3) of this section, shall not be shortened without the consent of the business.

(f) [Reserved]

(g) *Substantive criteria for use in confidentiality determinations.* Section 2.208 applies without change to information to which this section applies, except that health and safety data are not eligible for confidential treatment. No information to which this section applies is voluntarily submitted information.

(h) *Disclosure in special circumstances.* Section 2.209 applies to information to which this section applies, except that the following two additional provisions apply to § 2.209(c):

(1) The official purpose for which the information is needed must be in connection with the agency's duties under any law for protection of health or the environment or for specific law enforcement purposes; and

(2) EPA notifies the other agency that the information was acquired under authority of the Act and that any knowing disclosure of the information may subject the officers and employees of the other agency to the penalties in section 14(d) of the Act (15 U.S.C. 2613(d)).

(i) *Disclosure of information relevant in a proceeding.* (1) Under section 14(a)(4) of the Act (15 U.S.C. 2613(a)(4)), any information to which this section applies may be disclosed by EPA when the information is relevant in a proceeding under the Act, notwithstanding the fact that the information otherwise might be entitled to confidential treatment under this subpart. However, any such disclosure shall be made in a manner that preserves the confidentiality of the information to the extent practicable without impairing the proceeding. Disclosure of information to which this section applies because of its relevance in a proceeding shall be made only in accordance with this paragraph (i).

(2)–(4) The provisions of § 2.301(g) (2), (3), and (4) are incorporated by reference as paragraphs (i) (2), (3), and (4), respectively, of this section.

(j) *Disclosure of information to contractors and subcontractors.* (1) Under section 14(a)(2) of the Act (15 U.S.C. 2613(a)(2)), any information to which this section applies may be disclosed by EPA to a contractor or subcontractor of the United States performing work under the Act, notwithstanding the fact that the information otherwise might be entitled to confidential treatment under this subpart. Subject to the limitations in this paragraph (j), information to which this section applies may be disclosed:

(i) To a contractor or subcontractor with EPA, if the EPA program office managing the contract first determines in writing that such disclosure is necessary for the satisfactory performance by the contractor or subcontractor of the contract or subcontract; or

(ii) To a contractor or subcontractor with an agency other than EPA, if the EPA program office which provides the information to that agency, contractor, or subcontractor first determines in writing, in consultation with the General Counsel, that such disclosure is necessary for the satisfactory performance by the contractor or subcontractor of the contract or subcontract.

(2)–(4) The provisions of § 2.301(h)(2) (ii), (iii), and (iv) are incorporated by reference as paragraphs (j) (2), (3), and (4), respectively, of this section.

(5) At the time any information is furnished to a contractor or subcontractor under this paragraph (j), the EPA office furnishing the information to the contractor or subcontractor shall notify the contractor or subcontractor that the information was acquired under authority of the Act and that any knowing disclosure of the information may subject the contractor or subcontractor and its employees to the penalties in section 14(d) of the Act (15 U.S.C. 2613(d)).

(k) *Disclosure of information when necessary to protect health or the environment against an unreasonable risk of injury.* (1) Under section 14(a)(3) of the Act (15 U.S.C 2613(a)(3)), any information to which this section applies may

be disclosed by EPA when disclosure is necessary to protect health or the environment against an unreasonable risk of injury to health or the environment. However, any disclosure shall be made in a manner that preserves the confidentiality of the information to the extent not inconsistent with protecting health or the environment against the unreasonable risk of injury. Disclosure of information to which this section applies because of the need to protect health or the environment against an unreasonable risk of injury shall be made only in accordance with this paragraph (k).

(2) If any EPA office determines that there is an unreasonable risk of injury to health or the environment and that to protect health or the environment against the unreasonable risk of injury it is necessary to disclose information to which this section applies that otherwise might be entitled to confidential treatment under this subpart, the EPA office shall notify the General Counsel in writing of the nature of the unreasonable risk of injury, the extent of the disclosure proposed, how the proposed disclosure will serve to protect health or the environment against the unreasonable risk of injury, and the proposed date of disclosure. Such notification shall be made as soon as practicable after discovery of the unreasonable risk of injury. If the EPA office determines that the risk of injury is so imminent that it is impracticable to furnish written notification to the General Counsel, the EPA office shall notify the General Counsel orally.

(3) Upon receipt of notification under paragraph (k)(2) of this section, the General Counsel shall make a determination in writing whether disclosure of information to which this section applies that otherwise might be entitled to confidential treatment is necessary to protect health or the environment against an unreasonable risk of injury. The General Counsel shall also determine the extent of disclosure necessary to protect against the unreasonable risk of injury as well as when the disclosure must be made to protect against the unreasonable risk of injury.

(4) If the General Counsel determines that disclosure of information to which this section applies that otherwise might be entitled to confidential treatment is necessary to protect health or the environment against an unreasonable risk of injury, the General Counsel shall furnish notice to each affected business of the contemplated disclosure and of the General Counsel's determination. Such notice shall be made in writing by certified mail, return receipt requested, at least 15 days before the disclosure is to be made. The notice shall state the date upon which disclosure will be made. However, if the General Counsel determines that the risk of injury is so imminent that it is impracticable to furnish such notice 15 days before the proposed date of disclosure, the General Counsel may provide notice by means that will provide receipt of the notice by the affected business at least 24 hours before the disclosure is to be made. This may be done by telegram, telephone, or other reasonably rapid means.

[43 FR 40003, Sept. 8, 1978, as amended at 44 FR 17674, Mar. 23, 1979; 58 FR 462, Jan. 5, 1993]

§ 2.307 Special rules governing certain information obtained under the Federal Insecticide, Fungicide and Rodenticide Act.

(a) *Definitions.* For the purposes of this section;

(1) *Act* means the Federal Insecticide, Fungicide and Rodenticide Act, as amended, 7 U.S.C. 136 *et seq., and its predecessor, 7 U.S.C. 135 et seq.*

(2) *Applicant* means any person who has submitted to EPA (or to a predecessor agency with responsibility for administering the Act) a registration statement or application for registration under the Act of a pesticide or of an establishment.

(3) *Registrant* means any person who has obtained registration under the Act of a pesticide or of an establishment.

(b) *Applicability.* This section applies to all information submitted to EPA by an applicant or registrant for the purpose of satisfying some requirement or condition of the Act or of regulations which implement the Act, including information originally submitted to EPA for some other purpose but incorporated by the applicant or registrant into a submission in order to

satisfy some requirement or condition of the Act or of regulations which implement the Act. This section does not apply to information supplied to EPA by a petitioner in support of a petition for a tolerance under 21 U.S.C. 346a(d), unless the information is also described by the first sentence of this paragraph.

(c) *Basic rules which apply without change.* Sections 2.201 through 2.203, 2.206, 2.207, and 2.210 through 2.215 apply without change to information to which this section applies.

(d) *Initial action by EPA office.* Section 2.204 applies to information to which this section applies, except that the provisions of paragraph (e) of this section regarding the time allowed for seeking judicial review shall be reflected in any notice furnished to a business under § 2.204(d)(2).

(e) *Final confidentiality determination by EPA legal office.* Section 2.205 applies to information to which this section applies, except that—

(1) Notwithstanding § 2.205(i), the General Counsel (or his designee), rather than the Regional Counsel, shall make the determinations and take the actions required by § 2.205;

(2) In addition to the statement prescribed by the second sentence of § 2.205(f)(2), the notice of denial of a business confidentiality claim shall state that under section 10(c) of the Act, 7 U.S.C. 136h(c), the business may commence an action in an appropriate Federal district court for a declaratory judgment;

(3) The following sentence is substituted for the third sentence of § 2.205(f)(2): ''With respect to EPA's implementation of the determination, the notice shall state that (subject to § 2.210) EPA will make the information available to the public on the thirty-first (31st) calendar day after the date of the business's receipt of the written notice (or on such later date as is established in lieu thereof under paragraph (f)(3) of this section), unless the EPA legal office has first been notified of the business's commencement of an action in a Federal court to obtain judicial review of the determination or to obtain a declaratory judgment under section 10(c) of the Act and to obtain preliminary injunctive relief against disclosure.''; and

(4) Notwithstanding § 2.205(g), the 31 calendar day period prescribed by § 2.205(f)(2), as modified by paragraph (e)(3) of this section, shall not be shortened without the consent of the business.

(f) [Reserved]

(g) *Substantive criteria for use in confidentiality determinations.* Section 2.208 applies without change to information to which this section applies; however, no information to which this section applies is voluntarily submitted information.

(h) *Disclosure in special circumstances.* (1) Section 2.209 applies without change to information to which this section applies. In addition, under section 12(a)(2)(D) of the Act, 7 U.S.C. 136j(a)(2)(D), EPA possesses authority to disclose any information to which this section applies to physicians, pharmacists, and other qualified persons needing such information for the performance of their duties, notwithstanding the fact that the information might otherwise be entitled to confidential treatment under this subpart. Such authority under section 12(a)(2)(D) of the Act may be exercised only in accordance with paragraph (h)(2) or (h)(3) of this section.

(2) Information to which this section applies may be disclosed (notwithstanding the fact that it might otherwise be entitled to confidential treatment under this subpart) to physicians, pharmacists, hospitals, veterinarians, law enforcement personnel, or governmental agencies with responsibilities for protection of public health, and to employees of any such persons or agencies, or to other qualified persons, when and to the extent that disclosure is necessary in order to treat illness or injury or to prevent imminent harm to persons, property, or the environment, in the opinion of the Administrator or his designee.

(3) Information to which this section applies may be disclosed (notwithstanding the fact that it otherwise might be entitled to confidential treatment under this subpart) to a person under contract to EPA to perform work for EPA in connection with the Act or regulations which implement the Act, if the EPA program office managing the contract first determines

in writing that such disclosure is necessary in order that the contractor may carry out the work required by the contract. Any such disclosure to a contractor shall be made only in accordance with the procedure and requirements of §2.301(h)(2) (ii) through (iv).

(4) Information to which this section applies, and which relates to formulas of products, may be disclosed at any public hearing or in findings of fact issued by the Administrator, to the extent and in the manner authorized by the Administrator or his designee.

[41 FR 36902, Sept. 1, 1976, as amended at 43 FR 40005, Sept. 8, 1978]

§2.308 Special rules governing certain information obtained under the Federal Food, Drug and Cosmetic Act.

(a) *Definitions.* For the purposes of this section:

(1) *Act* means the Federal Food, Drug and Cosmetic Act, as amended, 21 U.S.C. 301 *et seq.*

(2) *Petition* means a petition for the issuance of a regulation establishing a tolerance for a pesticide chemical or exempting the pesticide chemical from the necessity of a tolerance, pursuant to section 408(d) of the Act, 21 U.S.C. 346a(d).

(3) *Petitioner* means a person who has submitted a petition to EPA (or to a predecessor agency).

(b) *Applicability.* (1) This section applies only to business information submitted to EPA (or to an advisory committee established under the Act) by a petitioner, solely in support of a petition which has not been acted on by the publication by EPA of a regulation establishing a tolerance for a pesticide chemical or exempting the pesticide chemical from the necessity of a tolerance, as provided in section 408(d) (2) or (3) of the Act, 21 U.S.C. 346a(d) (2) or (3).

(2) Section 2.307, rather than this section, applies to information described by the first sentence of §2.307(b) (material incorporated into submissions in order to satisfy the requirements of the Federal Insecticide, Fungicide and Rodenticide Act, as amended), even though such information was originally submitted by a petitioner in support of a petition.

(3) This section does not apply to information gathered by EPA under a proceeding initiated by EPA to establish a tolerance under section 408(e) of the Act, 21 U.S.C. 346a(e).

(c) *Basic rules which apply without change.* Sections 2.201, 2.202, 2.206, 2.207, and 2.210 through 2.215 apply without change to information to which this section applies.

(d) *Effect of submission of information without claim.* Section 2.203 (a) and (b) apply without change to information to which this section applies. Section 2.203(c), however, does not apply to information to which this section applies. A petitioner's failure to assert a claim when initially submitting a petition shall not constitute a waiver of any claim the petitioner may have.

(e) *Initial action by EPA office.* Section 2.204 applies to information to which this section applies, except that—

(1) Unless the EPA office has on file a written waiver of a petitioner's claim, a petitioner shall be regarded as an affected business, a petition shall be treated as if it were covered by a business confidentiality claim, and an EPA office acting under §2.204(d) shall determine that the information in the petition is or may be entitled to confidential treatment and shall take action in accordance with §2.204(d)(1);

(2) In addition to other required provisions of any notice furnished to a petitioner under §2.204(e), such notice shall state that—

(i) Section 408(f) of the Act, 21 U.S.C. 346a(f), affords absolute confidentiality to information to which this section applies, but after publication by EPA of a regulation establishing a tolerance (or exempting the pesticide chemical from the necessity of a tolerance) neither the Act nor this section affords any protection to the information;

(ii) Information submitted in support of a petition which is also incorporated into a submission in order to satisfy a requirement or condition of the Federal Insecticide, Fungicide and Rodenticide Act, as amended, 7 U.S.C. 136 et seq., is regarded by EPA as being governed, with respect to business confidentiality, by §2.307 rather than by this section;

(iii) Although it appears that this section may apply to the information at this time, EPA is presently engaged in determining whether for any reason the information is entitled to confidential treatment or will be entitled to such treatment if and when this section no longer applies to the information; and

(iv) Information determined by EPA to be covered by this section will not be disclosed for as long as this section continues to apply, but will be made available to the public thereafter (subject to §2.210) unless the business furnishes timely comments in response to the notice.

(f) *Final confidentiality determination by EPA legal office.* Section 2.205 applies to information to which this section applies, except that—

(1) Notwithstanding §2.205(i), the General Counsel or his designee, rather than the Regional counsel, shall in all cases make the determinations and take the actions required by §2.205;

(2) In addition to the circumstances mentioned in §2.205(f)(1), notice in the form prescribed by §2.205(f)(2) shall be furnished to each affected business whenever information is found to be entitled to confidential treatment under section 408(f) of the Act but not otherwise entitled to confidential treatment. With respect to such cases, the following sentences shall be substituted for the third sentence of §2.205(f)(2): ''With respect to EPA's implementation of the determination, the notice shall state that (subject to §2.210) EPA will make the information available to the public on the thirty-first (31st) calendar day after the business's receipt of the written notice (or on such later date as is established in lieu thereof under paragraph (f)(3) of this section), unless the EPA legal office has first been notified of the business's commencement of an action in a Federal court to obtain judicial review of the determination and to obtain preliminary injunctive relief against disclosure; provided, that the information will not be made available to the public for so long as it is entitled to confidential treatment under section 408(f) of the Federal Food, Drug and Cosmetic Act, 21 U.S.C. 346a(f).''; and

(3) Notwithstanding §2.205(g), the 31 calendar day period prescribed by §2.205(f)(2), as modified by paragraph (f)(2) of this section, shall not be shortened without the consent of the business.

(g) [Reserved]

(h) *Substantive criteria for use in confidentiality determinations.* Section 2.208 does not apply to information to which this section applies. Such information shall be determined to be entitled to confidential treatment for so long as this section continues to apply to it.

(i) *Disclosure in special circumstances.* (1) Section 2.209 applies to information to which this section applies. In addition, under Section 408(f) of the Act, 21 U.S.C. 346a(f), EPA is authorized to disclose the information to other persons. Such authority under section 408(f) of the Act may be exercised only in accordance with paragraph (i)(2) or (i)(3) of this section.

(2) Information to which this section applies may be disclosed (notwithstanding the fact that it otherwise might be entitled to confidential treatment under this subpart) to a person under contract to EPA to perform work for EPA in connection with the Act, with the Federal Insecticide, Fungicide, and Rodenticide Act, as amended, or regulations which implement either such Act, if the EPA program office managing the contract first determines in writing that such disclosure is necessary in order that the contractor may carry out the work required by the contract. Any such disclosure to a contractor shall be made only in accordance with the procedures and requirements of §2.301(h)(2) (ii) through (iv).

(3) Information to which this section applies may be disclosed by EPA to an advisory committee in accordance with section 408(d) of the Act, 21 U.S.C. 346a(d).

[41 FR 36902, Sept. 1, 1976, as amended at 43 FR 40005, Sept. 8, 1978]

§ 2.309 Special rules governing certain information obtained under the Marine Protection, Research and Sanctuaries Act of 1972.

(a) *Definitions.* For the purposes of this section:

(1) *Act* means the Marine Protection, Research and Sanctuaries Act of 1972, 33 U.S.C. 1401 *et seq.*

(2) *Permit* means any permit applied for or granted under the Act.

(3) *Application* means an application for a permit.

(b) *Applicability.* This section applies to all information provided to or obtained by EPA as a part of any application or in connection with any permit.

(c) *Basic rules which apply without change.* Sections 2.201 through 2.207 and 2.209 through 2.215 apply without change to information to which this section applies.

(d) *Substantive criteria for use in confidentiality determinations.* Section 2.208 does not apply to information to which this section applies. Pursuant to section 104(f) of the Act, 33 U.S.C. 1414(f), no information to which this section applies is eligible for confidential treatment.

[41 FR 36902, Sept. 1, 1976, as amended at 43 FR 40005, Sept. 8, 1978]

§2.310 Special rules governing certain information obtained under the Comprehensive Environmental Response, Compensation, and Liability Act of 1980, as amended.

(a) *Definitions.* For purposes of this section:

(1) *Act* means the Comprehensive Environmental Response, Compensation, and Liability Act of 1980, as amended, including amendments made by the Superfund Amendments and Reauthorization Act of 1986, 42 U.S.C. 9601, et seq.

(2) *Person* has the meaning given it in section 101(21) of the Act, 42 U.S.C. 9601(21).

(3) *Facility* has the meaning given it in section 101(9) of the Act, 42 U.S.C. 9601(9).

(4) *Hazardous substance* has the meaning given it in section 101(14) of the Act, 42 U.S.C. 9601(14).

(5) *Release* has the meaning given it in section 101(22) of the Act, 42 U.S.C. 9601(22).

(6) *Proceeding* means any rulemaking or adjudication conducted by EPA under the Act or under regulations which implement the Act (including the issuance of administrative orders under section 106 of the Act and cost recovery pre-litigation settlement negotiations under sections 107 or 122 of the Act), any cost recovery litigation under section 107 of the Act, or any administrative determination made under section 104 of the Act, but not including determinations under this subpart.

(b) *Applicability.* This section applies only to information provided to or obtained by EPA under section 104 of the Act, 42 U.S.C. 9604, by or from any person who stores, treats, or disposes of hazardous wastes; or where necessary to ascertain facts not available at the facility where such hazardous substances are located, by or from any person who generates, transports, or otherwise handles or has handled hazardous substances, or by or from any person who performs or supports removal or remedial actions pursuant to section 104(a) of the Act. Information will be considered to have been provided or obtained under section 104 of the Act if it was provided in response to a request from EPA or a representative of EPA made for any of the purposes stated in section 104, if it was provided pursuant to the terms of a contract, grant or other agreement to perform work pursuant to section 104, or if its submission could have been required under section 104, regardless of whether section 104 was cited as authority for any request for the information or whether the information was provided directly to EPA or through some third person.

(c) *Basic rules which apply without change.* Sections 2.201 through 2.207 and §§2.209 through 2.215 apply without change to information to which this section applies.

(d) [Reserved]

(e) *Substantive criteria for use in confidentiality determinations.* Section 2.208 applies without change to information to which this section applies; however, no information to which this section applies is voluntarily submitted information.

(f) [Reserved]

(g)(1) Under section 104(e)(7)(A) of the Act (42 U.S.C. 9604(e)(7)(A)) any information to which this section applies may be disclosed by EPA because of the relevance of the information in a

proceeding under the Act, notwithstanding the fact that the information otherwise might be entitled to confidential treatment under this subpart. Disclosure of information to which this section applies because of its relevance in a proceeding shall be made only in accordance with this paragraph (g).

(2) The provisions of § 2.301(g)(2) are to be used as paragraph (g)(2) of this section.

(3) In connection with any proceeding involving a decision by a presiding officer after an evidentiary or adjudicatory hearing, except with respect to litigation conducted by a Federal court, information to which this section applies which may be entitled to confidential treatment may be made available to the public, or to one or more parties of record to the proceeding, upon EPA's initiative, under this paragraph (g)(3). An EPA office proposing disclosure of information under this paragraph (g)(3) shall so notify the presiding officer in writing. Upon receipt of such a notification, the presiding officer shall notify each affected business that disclosure under this paragraph (g)(3) has been proposed, and shall afford each such business a period for comment found by the presiding officer to be reasonable under the circumstances. Information may be disclosed under this paragraph (g)(3) only if, after consideration of any timely comments submitted by the business, the EPA office determines in writing that, for reasons directly associated with the conduct of the proceeding, the contemplated disclosure would serve the public interest, and the presiding officer determines in writing that the information is relevant to a matter in controversy in the proceeding. The presiding officer may condition disclosure of the information to a party of record on the making of such protective arrangements and commitments as he finds to be warranted. Disclosure to one or more parties of record, under protective arrangements or commitments, shall not, of itself, affect the eligibility of information for confidential treatment under the other provisions of this subpart. Any affected business shall be given at least 5 days notice by the presiding officer prior to making the information available to the public or to one or more of the parties of record to the proceeding.

(4) In connection with any proceeding involving a decision by a presiding officer after an evidentiary or adjudicatory hearing, except with respect to litigation conducted by a Federal court, information to which this section applies which may be entitled to confidential treatment may be made available to one or more parties of record to the proceeding, upon request of a party, under this paragraph (g)(4). A party of record seeking disclosure of information shall direct his request to the presiding officer. Upon receipt of such a request, the presiding officer shall notify each affected business that disclosure under this paragraph (g)(4) has been requested, and shall afford each such business a period for comment found by the presiding officer to be reasonable under the circumstances. Information may be disclosed to a party of record under this paragraph (g)(4) only if, after consideration of any timely comments submitted by the business, the presiding officer determines in writing that:

(i) The party of record has satisfactorily shown that with respect to a significant matter which is in controversy in the proceeding, the party's ability to participate effectively in the proceeding will be significantly impaired unless the information is disclosed to him; and

(ii) Any harm to an affected business that would result from the disclosure is likely to be outweighed by the benefit to the proceeding and the public interest that would result from the disclosure.

The presiding officer may condition disclosure of the information to a party of record on the making of such protective arrangements and commitments as he finds to be warranted. Disclosure to one or more parties of record, under protective arrangements or commitments, shall not, of itself, affect the eligibility of information for confidential treatment under the other provisions of this subpart. Any affected business shall be given at least 5 days notice by the presiding officer prior to making the information available to one or more of the parties of record to the proceeding.

(5) In connection with cost recovery pre-litigation settlement negotiations under sections 107 or 122 of the Act (42 U.S.C. 9607, 9622), any information to which this section applies that may be entitled to confidential treatment may be made available to potentially responsible parties pursuant to a contractual agreement to protect the information.

(6) In connection with any cost recovery proceeding under section 107 of the Act involving a decision by a presiding officer after an evidentiary or adjudicatory hearing, any information to which this section applies that may be entitled to confidential treatment may be made available to one or more parties of record to the proceeding, upon EPA's initiative, under this paragraph (g)(6). Such disclosure must be made pursuant to a stipulation and protective order signed by all parties to whom disclosure is made and by the presiding officer.

(h) *Disclosure to authorized representatives.* (1) Under section 104(e)(7) of the Act (42 U.S.C. 9604(e)(7)), EPA possesses authority to disclose to any authorized representative of the Untied States any information to which this section applies, notwithstanding the fact that the information might otherwise be entitled to confidential treatment under this subpart. Such authority may be exercised only in accordance with paragraph (h)(2) or (h)(3) of this section.

(2) The provisions of §2.301(h)(2) are to be used as paragraph (h)(2) of this section.

(3) The provisions of §2.301(h)(3) are to be used as paragraph (h)(3) of this section.

(4) At the time any information is furnished to a contractor, subcontractor, or state or local government under this paragraph (h), the EPA office furnishing the information to the contractor, subcontractor, or state or local government agency shall notify the contractor, subcontractor, or state or local government agency that the information may be entitled to confidential treatment and that any knowing and willful disclosure of the information may subject the contractor, subcontractor, or state or local government agency and its employees to penalties in section 104(e)(7)(B) of the Act (42 U.S.C. 9604(e)(7)(B)).

[50 FR 51663, Dec. 18, 1985, as amended at 58 FR 462, Jan. 5, 1993]

§2.311 Special rules governing certain information obtained under the Motor Vehicle Information and Cost Savings Act.

(a) *Definitions.* For the purposes of this section:

(1) *Act* means the Motor Vehicle Information and Cost Savings Act, as amended, 15 U.S.C. 1901 *et seq.*

(2) *Average fuel economy* has the meaning given it in section 501(4) of the Act, 15 U.S.C. 2001(4).

(3) *Fuel economy* has the meaning given it in section 501(6) of the Act, 15 U.S.C. 2001(6).

(4) *Fuel economy data* means any measurement or calculation of fuel economy for any model type and average fuel economy of a manufacturer under section 503(d) of the Act, 15 U.S.C. 2003(d).

(5) *Manufacturer* has the meaning given it in section 501(9) of the Act, 15 U.S.C. 2001(9).

(6) *Model type* has the meaning given it in section 501(11) of the Act, 15 U.S.C. 2001(11).

(b) *Applicability.* This section applies only to information provided to or obtained by EPA under Title V, Part A of the Act, 15 U.S.C. 2001 through 2012. Information will be considered to have been provided or obtained under Title V, Part A of the Act if it was provided in response to a request from EPA made for any purpose stated in Title V, Part A, or if its submission could have been required under Title V Part A, regardless of whether Title V Part A was cited as the authority for any request for information or whether the information was provided directly to EPA or through some third person.

(c) *Basic rules which apply without change.* Sections 2.201 through 2.207 and §§2.209 through 2.215 apply without change to information to which this section applies.

(d) [Reserved]

(e) *Substantive criteria for use in confidentiality determinations.* Section 2.208 applies without change to information to which this section applies, except that information this is fuel economy

data is not eligible for confidential treatment. No information to which this section applies is voluntarily submitted information.

(f) [Reserved]

(g) *Disclosure of information relevant to a proceeding.* (1) Under section 505(d)(1) of the Act, any information to which this section applies may be released by EPA because of the relevance of the information to a proceeding under Title V, Part A of the Act, notwithstanding the fact that the information otherwise might be entitled to confidential treatment under this subpart. Release of information to which this section applies because of its relevance to a proceeding shall be made only in accordance with this paragraph (g).

(2) The provisions of § 2.301(g)(2) are to be used as paragraph (g)(2) of this section.

(3) The provisions of § 2.301(g)(3) are to be used as paragraph (g)(3) of this section.

(4) The provisions of § 2.301(g)(4) are to be used as paragraph (g)(3) of this section.

[50 FR 51663, Dec. 18, 1985]

Subpart C—Testimony by Employees and Production of Documents in Civil Legal Proceedings Where the United States Is Not a Party

AUTHORITY: 5 U.S.C. 301; Reorganization Plan No. 3 of 1970, 5 U.S.C. App.; 33 U.S.C. 361(a); 42 U.S.C. 300j–9; 42 U.S.C. 6911a, 42 U.S.C. 7601(a).

SOURCE: 50 FR 32387, Aug. 9, 1985, unless otherwise noted.

§ 2.401 Scope and purpose.

This subpart sets forth procedures to be followed when an EPA employee is requested or subpoenaed to provide testimony concerning information acquired in the course of performing official duties or because of the employee's official status. (In such cases, employees must state for the record that their testimony does not necessarily represent the official position of EPA. If they are called to state the official position of EPA, they should ascertain that position before appearing.) These procedures also apply to subpoenas *duces tecum* for any document in the possession of EPA and to requests for certification of copies of documents.

(a) These procedures apply to:

(1) State court proceedings (including grand jury proceedings);

(2) Federal civil proceedings, except where the United States, EPA or another Federal agency is a party; and

(3) State and local legislative and administrative proceedings.

(b) These procedures do not apply:

(1) To matters which are not related to EPA;

(2) To Congressional requests or subpoenas for testimony or documents;

(3) Where employees provide expert witness services as approved outside activities in accordance with 40 CFR part 3, subpart E (in such cases, employees must state for the record that the testimony represents their own views and does not necessarily represent the official position of EPA);

(4) Where employees voluntarily testify as private citizens with respect to environmental matters (in such cases, employees must state for the record that the testimony represents their own views and does not necessarily represent the official position of EPA).

(c) The purpose of this subpart is to ensure that employees' official time is used only for official purposes, to maintain the impartiality of EPA among private litigants, to ensure that public funds are not used for private purposes and to establish procedures for approving testimony or production of documents when clearly in the interests of EPA.

§ 2.402 Policy on presentation of testimony and production of documents.

(a) With the approval of the cognizant Assistant Administrator, Office Director, Staff Office Director or Regional Administrator or his designee, EPA employees (as defined in 40 CFR 3.102 (a) and (b)) may testify at the request of another Federal agency, or, where it is in the interests of EPA, at the request of a State or local government or State legislative committee.

(b) Except as permitted by paragraph (a) of this section, no EPA employee may provide testimony or produce documents in any proceeding to which this subpart applies concerning information acquired in the course of performing

official duties or because of the employee's official relationship with EPA, unless authorized by the General Counsel or his designee under §§2.403 through 2.406.

§2.403 Procedures when voluntary testimony is requested.

A request for testimony by an EPA employee under §2.402(b) must be in writing and must state the nature of the requested testimony and the reasons why the testimony would be in the interests of EPA. Such requests are immediately sent to the General Counsel or his designee (or, in the case of employees in the Office of Inspector General, the Inspector General or his designee) with the recommendations of the employee's supervisors. The General Counsel or his designee, in consultation with the appropriate Assistant Administrator, Regional Administrator, or Staff Office Director (or, in the case of employees in the Office of Inspector General, the Inspector General or his designee), determines whether compliance with the request would clearly be in the interests of EPA and responds as soon as practicable.

§2.404 Procedures when an employee is subpoenaed.

(a) Copies of subpoenas must immediately be sent to the General Counsel or his designee with the recommendations of the employee's supervisors. The General Counsel or his designee, in consultation with the appropriate Assistant Administrator, Regional Administrator or Staff Office Director, determines whether compliance with the subpoena would clearly be in the interests of EPA and responds as soon as practicable.

(b) If the General Counsel or his designee denies approval to comply with the subpoena, or if he has not acted by the return date, the employee must appear at the stated time and place (unless advised by the General Counsel or his designee that the subpoena was not validly issued or served or that the subpoena has been withdrawn), produce a copy of these regulations and respectfully refuse to provide any testimony or produce any documents. *United States ex rel. Touhy* v. *Ragen,* 340 U.S. 462 (1951).

(c) Where employees in the Office of Inspector General are subpoenaed, the Inspector General or his designee makes the determination under paragraphs (a) and (b) of this section in consultation with the General Counsel.

(d) The General Counsel will request the assistance of the Department of Justice or a U.S. Attorney where necessary to represent the interests of the Agency and the employee.

§2.405 Subpoenas duces tecum.

Subpoenas *duces tecum* for documents or other materials are treated the same as subpoenas for testimony. Unless the General Counsel or his designee, in consultation with the appropriate Assistant Administrator, Regional Administrator or Staff Office Director (or, as to employees in the Office of Inspector General, the Inspector General) determines that compliance with the subpoena is clearly in the interests of EPA, the employee must appear at the stated time and place (unless advised by the General Counsel or his designee that the subpoena was not validly issued or served or that the subpoena has been withdrawn) and respectfully refuse to produce the subpoenaed materials. However, where a subpoena *duces tecum* is essentially a written request for documents, the requested documents will be provided or denied in accordance with subparts A and B of this part where approval to respond to the subpoena has not been granted.

§2.406 Requests for authenticated copies of EPA documents.

Requests for authenticated copies of EPA documents for purposes of admissibility under 28 U.S.C. 1733 and Rule 44 of the Federal Rules of Civil Procedure will be granted for documents which would otherwise be released pursuant to subpart A. For purposes of Rule 44 the *person having legal custody of the record* is the cognizant Assistant Administrator, Regional Administrator, Staff Office Director or Office Director or his designee. The advice of the Office of General Counsel should be obtained concerning the proper form of authentication.

PART 3—EMPLOYEE RESPONSIBILITIES AND CONDUCT

Subpart A—General Provisions

Sec.
3.100 Purpose.
3.101 Coverage.
3.102 Definitions.
3.103 Ethical standards of conduct for employees.
3.104 Other general standards of conduct.
3.105 Post-employment restrictions affecting former EPA attorneys.
3.106 Statutes relating to employee conduct.

APPENDIX A TO SUBPART A—CONFLICT OF INTEREST STATUTES AND EXAMPLES
APPENDIX B TO SUBPART A—OTHER PROVISIONS
APPENDIX C TO SUBPART A—PROCEDURES FOR ADMINISTRATIVE ENFORCEMENT OF POST-EMPLOYMENT RESTRICTIONS

Subpart B—Advice and Enforcement

3.200 Purpose.
3.201 Designation.
3.202 Reporting, investigating and enforcing.

Subpart C—Financial Interests and Investments

3.300 Prohibitions against acts affecting a personal financial interest.
3.301 Waiver.
3.302 Financial Disclosure Reports and Confidential Statements of Employment and Financial Interest.
3.303 Special requirements under the Clean Air Act.
3.304 Special requirements under the Toxic Substances Control Act.
3.305 Special requirements under the Surface Mining Control and Reclamation Act.

APPENDIX A TO SUBPART C—PROCEDURES FOR FILING CONFIDENTIAL STATEMENTS OF EMPLOYMENT AND FINANCIAL INTEREST
APPENDIX B TO SUBPART C—EMPLOYEES SUBJECT TO SPECIAL REQUIREMENTS UNDER THE CLEAN AIR ACT

Subpart D—Gifts, Gratuities, or Entertainment

3.400 Policy.

Subpart E—Outside Employment

3.500 Definitions.
3.501 Policy.
3.502 Guidelines and limitations.
3.503 Distinction between official and outside activities.
3.504 Compensation, honorariums, travel expenses.
3.505 Special conditions which apply to teaching, lecturing and speechmaking.
3.506 Special conditions applicable to outside writing and editing activities.
3.507 Special conditions applicable to publishing.
3.508 Administrative approval.

APPENDIX A TO SUBPART E—PROCEDURES FOR PERMISSION TO ENGAGE IN OUTSIDE EMPLOYMENT OR OTHER OUTSIDE ACTIVITY

Subpart F—Standards of Conduct for Special Government Employees

3.600 Applicability.
3.601 Standards of conduct.
3.602 Statements of employment and financial interest.
3.603 Review, enforcement, reporting and investigation.
3.604 Application of conflict-of-interest statutes.
3.605 Other statutes.

AUTHORITY: E.O. 11222, 30 FR 6460; 3 CFR 1964–1965 Comp., p. 306; 5 CFR parts 734, 735 and 737.

SOURCE: 49 FR 7530, Feb. 29, 1984, unless otherwise noted.

Subpart A—General Provisions

§ 3.100 Purpose.

These regulations set forth the ethical standards which apply to all Environmental Protection Agency (EPA) employees. They are intended to supplement regulations of the Office of Government Ethics at 5 CFR parts 734, 735 and 737.

§ 3.101 Coverage.

(a) Subparts A, B, C, D and E apply to all regular EPA employees, including Public Health Service commissioned officers assigned to EPA, employees detailed to EPA from other federal agencies and employees detailed or assigned to EPA under the Intergovernmental Personnel Act.

(b) Subpart F applies only to special Government employees.

§ 3.102 Definitions.

(a) *Employee* means any officer or employee of the Environmental Protection Agency, Public Health Service commissioned officers assigned to EPA, employees detailed to EPA from other federal agencies and employees

detailed or assigned to EPA under the Intergovernmental Personnel Act. The term does not include special Government employees.

(b) *Special Government employee* means an officer or employee of the Environmental Protection Agency who is retained, designated, appointed or employed to perform, with or without compensation, temporary duties either on a full-time or intermittent basis, for not to exceed 130 days during any period of 365 consecutive days.

(c) *Former employee* means a former Environmental Protection Agency employee, or a former special Government employee.

§3.103 Ethical standards of conduct for employees.

Employees may not use their official positions for private gain or act in such a manner that creates the reasonable appearance of doing so.

Employees therefore must not:

(a) Engage, directly or indirectly, in any business transaction or arrangement, including buying or selling securities or recommending the purchase or sale of securities to others, on the basis of information derived from their official positions which has not been made available to the general public;

(b) Use information acquired through EPA duties that has not been made available to the general public to further their private interests;

(c) Use their Government positions to coerce, or appear to coerce, anyone to provide any financial benefit to themselves or others; or

(d) Take any action, whether specifically prohibited or not, which would result in or create the reasonable appearance of:

(1) Using public office for private gain;

(2) Giving preferential treatment to any organization or person;

(3) Impeding Government efficiency or economy;

(4) Losing independence or impartiality of action;

(5) Making a Government decision outside official channels; or

(6) Adversely affecting public confidence in the integrity of the Government or EPA.

§3.104 Other general standards of conduct.

(a) *Use of Government property.* Employees must not use or allow the use of, Government-owned or leased property for other than official purposes. Employees have a duty to protect and conserve Government property, especially equipment, supplies and other property entrusted to them.

(b) *Indebtedness.* Indebtedness of EPA employees is essentially a private matter. EPA generally does not act as a collection agency or determine the validity or amount of debts. However, employees are expected to honor just financial obligations and Pub. L. 93–647 provides for garnishment of employees' wages for nonpayment of alimony or child support. In addition, the Debt Collection Act of 1982 at 5 U.S.C. 5514 authorizes agencies to recover employees' debts to the United States through installment deductions from salaries.

(c) *Gambling, betting, and lotteries.* Employees must not gamble on Government property or while on Government duty. Gambling includes operating a gambling device, conducting a lottery or pool, playing a game for money or property or selling or purchasing a numbers slip. However, employees may participate in federally sponsored fund-raising activities under section 3 of Executive Order 10927 of March 18, 1961, or in similar officially approved activities.

(d) *General conduct prejudicial to the Government.* Employees must not engage in criminal, infamous, dishonest, immoral or disgraceful conduct, or any other conduct prejudicial to the Government.

(e) *Statutory prohibitions relating to gifts and decorations.*

(1) Employees must not solicit contributions from other employees for gifts to official superiors or accept gifts from employees receiving less salary than themselves. 5 U.S.C. 7351. However, small voluntary gifts on special occasions such as marriage, illness, death or retirement are permitted.

(2) Employees may not accept gifts, presents or decorations from foreign governments unless authorized by 5 U.S.C. 7342.

(3) Subpart D contains further guidance on gifts, gratuities and entertainment.

§ 3.105 Post-employment restrictions affecting former EPA attorneys.

This section applies where a jurisdiction in which a former EPA employee holds bar membership has adopted Rule 1.11 of the American Bar Association's Model Rules of Professional Conduct dated August 1983, in particular Rule 1.11(d)(2) which provides that the term *matter* includes *any other matter covered by the conflict of interest rules of the appropriate government agency*. In such cases, the term *matter* includes participation (in the form of drafting, providing advice or making recommendations) in the development of EPA regulations. Where a former EPA employee participated in the development of an EPA regulation while employed by EPA, he or she may not represent or assist in representing any party or parties as an attorney in any judicial proceeding to contest the validity of the rule. However, this section applies only where the complaint was not filed before the effective date of this regulation or the date when Rule 1.11 became effective in the jurisdiction, whichever occurs later.

[50 FR 39623, Sept. 27, 1985]

§ 3.106 Statutes relating to employee conduct.

Appendix A of this subpart sets out the *conflict of interest* statutes, together with examples of their application, and appendix B cites other statutory provisions which relate to employees' conduct.

[49 FR 7530, Feb. 29, 1984. Redesignated at 50 FR 39623, Sept. 27, 1985]

APPENDIX A TO SUBPART A—CONFLICT OF INTEREST STATUTES AND EXAMPLES

18 U.S.C. 203

Compensation to Members of Congress, officers, and others in matters affecting the Government.

(a) Whoever, otherwise than as provided by law for the proper discharge of official duties, directly or indirectly receives or agrees to receive, or asks, demands, solicits, or seeks, any compensation for services rendered or to be rendered either by himself or another—

(1) At a time when he is a Member of Congress, Member of Congress-elect, Resident Commissioner, or Resident Commissioner-elect; or

(2) At a time when he is an officer or employee of the United States in the executive, legislative, or judicial branch of the Government, or in any agency of the United States including the District of Columbia—in relation to any proceeding, application, request for a ruling or other determination, contract, claim, controversy, charge, accusation, arrest, or other particular matter in which the United States is a party or has a direct and substantial interest before any department, agency, court-martial, officer, or any civil, military, or naval commission, or

(b) Whoever, knowingly, otherwise than as provided by law for the proper discharge of official duties, directly or indirectly gives, promises, or offers any compensation for any such services rendered or to be rendered at a time when the person to whom the compensation is given, promised, or offered, is or was such a Member, Commissioner, officer, or employee—

Shall be fined not more than $10,000, or imprisoned for not more than 2 years, or both; and shall be incapable of holding any office of honor, trust, or profit under the United States.

(c) A special Government employee shall be subject to subsection (a) only in relation to a particular matter involving a specific party or parties (1) in which he has at any time participated personally and substantially as a Government employee or as a special Government employee through decision, approval, disapproval, recommendation, the rendering of advice, investigation, or otherwise, or (2) which is pending in the department or agency of the Government in which he is serving: *Provided*, that clause (2) shall not apply in the case of a special Government employee who has served in such department or agency no more than 60 days during the immediately preceding period of 365 consecutive days.

Discussion

This provision prohibits employees from accepting fees for representing any outside party in any administrative proceeding before a Federal agency and from sharing in fees earned by others for such activities. For example, an attorney could not share in the partnership income of a law firm to the extent such income is attributable to representational activities before Federal agencies. It does not prohibit receipt of compensation for other than actual appearances as an *agent or attorney* for outside parties; a fee for actual work, such as drafting a brief, is not prohibited. (But see the appearance standards of §§ 3.103 and 3.503). The prohibition covers agreements to receive prohibited fees

and requests for such fees. Moreover, the restriction applies even after the employee leaves the Government in that a former employee may not share in fees attributable to representational work before administrative agencies which was performed while the former employee was with the Government.

18 U.S.C. 205

Activities of officers and employees in claims against and other matters affecting the Government.

Whoever, being an officer or employee of the United States in the executive, legislative, or judicial branch of the Government or in any agency of the United States, including the District of Columbia, otherwise than in the proper discharge of his official duties—

(1) Acts as agent or attorney for prosecuting any claim against the United States, or receives any gratuity, or any share of or interest in any such claim in consideration of assistance in the prosecution of such claim, or

(2) Acts as agent or attorney for anyone before any department, agency, court, court-martial, officer, or any civil military, or naval commission in connection with any proceeding, application, request for a ruling or other determination, contract, claim, controversy, change, accusation, arrest, or other particular matter in which the United States is a party or has a direct and substantial interest—

Shall be fined not more than $10,000, or imprisoned for not more than 2 years, or both.

A special Government employee shall be subject to the preceding paragraphs only in relation to a particular matter involving a specific party or parties (1) in which he has at any time participated personally and substantially as a Government employee or as a special Government employee through decision, approval, disapproval, recommendation, the rendering of advice, investigation or otherwise, or (2) which is pending in the department or agency of the Government in which he is serving: *Provided*, That clause (2) shall not apply in the case of a special Government employee who has served in such department or agency no more than 60 days during the immediately preceding period of 365 consecutive days.

Nothing herein prevents an officer or employee, if not inconsistent with the faithful performance of his duties, from acting without compensation as agent or attorney for any person who is the subject of disciplinary, loyalty, or other personnel administration proceedings in connection with those proceedings.

Nothing herein or in section 203 prevents an officer or employee, including a special Government employee, from acting, with or without compensation, as agent or attorney for his parents, spouse, child, or any person for whom, or for any estate for which, he is serving as guardian, executor, administrator, trustee, or other personal fiduciary except in those matters in which he has participated personally and substantially as a Government employee, through decision, approval, disapproval, recommendation, the rendering of advice, investigation, or otherwise, or which are the subject of his official responsibility provided that the Government official responsible for appointment to his position approves.

Nothing herein or in section 203 prevents a special Government employee from acting as agent or attorney for another person in the performance of work under a grant by, or a contract with or for the benefit of, the United States provided that the head of the department or agency concerned with the contract shall certify in writing that the national interest so requires.

Such certification shall be published in the FEDERAL REGISTER.

Nothing herein prevents an officer or employee from giving testimony under oath or from making statements required to be made under penalty for perjury or contempt.

Discussion

This provision generally forbids employees to act as *agent or attorney* (that is, communicate with intent to influence) on behalf of outside parties before Federal agencies or courts in matters in which the United States is a party or has a direct and substantial interest. The prohibition applies to both paid and unpaid representation.

Examples

1. An EPA employee has received permission to work as a consultant to a firm which has been awarded a contract by the Department of Defense. A controversy arises concerning the scope of work of the contract, and the firm asks the EPA employee to discuss the matter with the contracting officer to seek additional compensation for an alleged change in the scope of work.

Answer: The employee may not do so, since he would be acting as agent for an outside party in a claim or controversy to which the Government is a party. (Moreover, under the appearance standards of §3.502(c) the employee should not assist the firm in preparing its claim.)

2. An employee is an officer in an environmental organization and has been asked to present testimony on behalf of the organization at an EPA rulemaking proceeding.

Answer: Although the statute does not apply to testimony under oath, the activity nonetheless violates the appearance standards of §§3.103 and 3.503. However, it would be proper for the employee to appear as a concerned individual rather than as a representative of an outside group.

3. Several years ago, an employee received approval for outside employment as a consultant to an architect/engineer firm which is now competing for a subagreement under an EPA construction grant. The firm has asked the employee to present its proposal to EPA's grantee.

Answer: The statutory restriction does not apply, since the representational activity would not be before EPA or any other Federal agency. Such activity would nonetheless violate the appearance standards of §§3.103 and 3.502. Moreover, under the appearance standards, Deputy Ethics Officials would be justified in refusing to approve outside employment involving work on projects funded by EPA.

Exceptions

1. With the approval of the appropriate Deputy Ethics Official, an employee may act as agent or attorney before a Federal court or agency, for his or her parents, spouse, child or any person for whom, or for any estate for which, the employee is serving as guardian, executor, administrator, trustee or other personal fiduciary except where the employee has participated in the same matter on behalf of the Government or where the matter is the subject of the employee's official responsibility.

2. Nothing in the statute prevents an employee from giving testimony under oath or from making statements required to be made under penalty for perjury or contempt. However, this exception does not apply to acting as an expert witness for an outside party in a Government matter.

3. Employees may act without compensation as agent or attorney for anyone who is the subject of disciplinary, loyalty or other personnel proceedings, provided the employee's official duties do not conflict with such representation. Employees are encouraged to seek the advice of the Designated Agency Ethics Official or Deputy Ethics Official before engaging in such representation.

4. The restriction does not apply to special Government employees to the same extent as to employees. Restrictions applicable to such employees are discussed in §3.604.

18 U.S.C. 207

Disqualification of former officers and employees; disqualification of partners of current officers and employees.

(a) Whoever, having been an officer or employee of the executive branch of the United States Government, of any independent agency of the United States, or of the District of Columbia, including a special Government employee, after his employment has ceased, knowingly acts as agent or attorney for, or otherwise represents, any other person (except the United States), in any formal or informal appearance before, or, with the intent to influence, makes any oral or written communication on behalf of any other person (except the United States) to—

(1) Any department, agency, court, court-martial, or any civil, military, or naval commission of the United States or the District of Columbia, or any officer or employee thereof, and

(2) In connection with any judicial or other preceeding, application, request for a ruling or other determination, contract, claim, controversy, investigation, charge, accusation, arrest, or other particular matter involving a specific party or parties in which the United States or the District of Columbia is a party or has a direct and substantial interest, and

(3) In which he participated personally and substantially as an officer or employee through decision, approval, disapproval, recommendation, the rendering of advice, investigation or otherwise, while so employed; or

(b) Whoever, (i) having been so employed, within two years after his employment has ceased, knowingly acts as agent or attorney for, or otherwise represents, any other person (except the United States), in any formal or informal appearance before, or, with the intent to influence, makes any oral or written communication on behalf of any other person (except the United States) to, or (ii) having been so employed as specified in subsection (d) of this section, within two years after his employment has ceased, knowingly represents or aids, counsels, advises, consults, or assists in representing any other person (except the United States) by personal presence at any formal or informal appearance before—

(1) Any department, agency, court, court-martial, or any civil, military or naval commission of the United States or the District of Columbia, or any or employee thereof, and

(2) In connection with any judicial or other proceeding, application, request for a ruling or other determination, contract, claim, controversy, investigation, charge, accusation, arrest or other particular matter involving a specific party or parties in which the United States or the District of Columbia is a party or has a direct and substantial interest, and

(3) As to (i), which was actually pending under his offical responsibility as an officer or employee within a period of one year prior to the termination of such responsibility, or, as to (ii), in which he participated personally and substantially as an officer or employee; or

(c) Whoever, other than a special Government employee who serves for less than sixty days in a given calendar year, having been so employed as specified in subsection (d) of this section, within one year after such employment has ceased, knowingly acts as agent or attorney for, or otherwise represents, anyone other than the United States in any formal or informal appearance before,

or with the intent to influence, makes any oral or written communication on behalf of anyone other than the United States, to—

(1) The department or agency in which he served as an officer or employee, or any officer or employee thereof, and

(2) In connection with any judicial, rulemaking, or other proceeding, application, request for a ruling or other determination, contract, claim, controversy, investigation, charge, accusation, arrest, or other particular matter, and

(3) Which is pending before such department or agency or in which such department or agency has a direct and substantial interest—shall be fined not more than $10,000 or imprisoned for not more than two years, or both.

(d)(1) Subsection (c) of this section shall apply to a person employed—

(A) At a rate of pay specified in or fixed according to subchapter II of chapter 53 of title 5, United States Code, or a comparable or greater rate of pay under other authority;

(B) On active duty as a commissioned officer of a uniformed service assigned to pay grade of 0–9 or above as described in section 201 of Title 37, United States Code; or

(C) In a position which involves significant decision-making or supervisory responsibility, as designated under this subparagraph by the Director of the Office of Government Ethics, in consultation with the department or agency concerned. Only positions which are not covered by subparagraphs (A) and (B) above, and for which the basic rate of pay is equal to or greater than the basic rate of pay for GS–17 of the General Schedule prescribed by section 5332 of title 5, United States Code, or positions which are established within the Senior Executive Service pursuant to the Civil Service Reform Act of 1978, or positions of active duty commissioned officers of the uniformed services assigned to pay 0–7 or 0–8, as described in section 201 of Title 37, United States Code, may be designated. As to persons in positions designated under this subparagraph, the Director may limit the restrictions of subsection (c) to permit a former officer or employee, who served in a separate agency or bureau within a department or agency, to make appearances before or communications to persons in an unrelated agency or bureau, within the same department or agency, having separate and distinct subject matter jurisdiction, upon a determination by the Director that there exists no potential for use of undue influence or unfair advantage based on past Government service. On an annual basis, the Director of the Office of Government Ethics shall review the designations and determinations made under this subparagraph and, in consultation with the department or agency concerned, make such additions and deletions as are necessary. Departments and agencies shall cooperate to the fullest extent with the Director of the Office of Government Ethics in the exercise of his responsibilities under this paragraph.

(2) The prohibition of subsection (c) shall not apply to appearances, communications, or representation by a former officer or employee, who is—

(A) An elected official of a State or local government or

(B) Whose principal occupation or employment is with (i) an agency or instrumentality of a State or local government, (ii) an accredited, degree-granting institution of higher education, as defined in section 1201(a) of the Higher Education Act of 1965, or (iii) a hospital or medical research organization, exempted and defined under section 501(c)(3) of the Internal Revenue Code of 1954, and the appearance, communication, or representation is on behalf of such government, institution, hospital, or organization.

(e) For the purposes of subsection (c), whenever the Director of the Office of Government Ethics determines that a separate statutory agency or bureau within a department or agency exercises functions of the department or agency, the Director shall by rule designate such agency or bureau as a separate department or agency; except that such designation shall not apply to former heads of designated bureaus or agencies, or former officers and employees of the department or agency whose official responsibilities included supervision of said agency or bureau.

(f) The prohibitions of subsections (a), (b), and (c) shall not apply with respect to the making of communications solely for the purpose of furnishing scientific or technological information under procedures acceptable to the department or agency concerned with the particular matter, or if the head of the department or agency concerned with the particular matter, in consultation with the Director of the Office of Government Ethics, makes a certification, published in the FEDERAL REGISTER, that the former officer or employee has outstanding qualifications in a scientific, technological, or other technical discipline, and is acting with respect to a particular matter which requires such qualifications, and that the national interest would be served by the participation of the former officer or employee.

(g) Whoever, being a partner of an officer or employee of the executive branch of the United States Government, of any independent agency of the United States, or of the District of Columbia, including a special Government employee, acts as agent or attorney for anyone other than the United States before any department, agency, court, court-martial, or any civil, military, or naval commission of the United States or the District of Columbia, or any officer or

employee thereof, in connection with any judicial or other proceeding, application, request for a ruling or other determination, contract, claim, controversy, investigation, charge, accusation, arrest, or other particular matter in which the United States or the District of Columbia is a party or has direct and substantial interest and in which such officer or employer or special Government employee participates or has participated personally and substantially as an officer or employee through decision, approval, disapproal, recommendation, the rendering of advice, investigation, or otherwise, or which is the subject of his official responsibility, shall be fined not more than $5,000, or imprisoned for not more than one year, or both.

(h) Nothing in this section shall prevent a former officer or employee from giving testimony under oath, or from making statements required to be made under penalty of perjury.

(i) The prohibition contained in subsection (c) shall not apply to appearances or communications by a former officer or employee concerning matters of a personal and individual nature, such as personal income taxes or pension benefits; nor shall the prohibition of that subsection prevent a former officer of employee from making or providing a statement, which is based on the former officer's or employee's own special knowledge in the particular area that is the subject of the statement, provided that no compensation is thereby received, other than that regularly provided for by law or regulation for witnesses.

(j) If the head of the department or agency in which the former officer or employee served finds, after notice and opportunity for a hearing, that such former officer or employee violated subsection (a), (b), or (c) of this section, such department or agency head may prohibit that person from making, on behalf of any other person (except the United States), any informal or formal appearance before or with the intent to influence, any oral or written communication to, such department or agency on a pending matter of business for a period not to exceed five years, or may take other appropriate disciplinary action. Such disciplinary action shall be subject to review in an appropriate United States district court. No later than six months after the effective date of this Act, departments and agencies shall, in consultation with the Director of the Office of Government Ethics, establish procedures to carry out this subsection.

Discussion

The foregoing provision establishes four types of restrictions:

Permanent Restrictions. Former employees are forever barred from representing anyone other than the United States before a federal court or agency with respect to ''a particular matter involving a specific party or parties'' in which they ever participated as Government employees. Participation is broadly defined to include advice and recommendations as well as decision-making. However, the restriction applies only to matters which involve specific parties, such as contracts, grants and adjudications, and it covers only actual representation of another. The restriction does not cover rulemaking, and former employees may represent an outside party in proceedings governed by rules they helped to make.

The restriction does not generally prohibit former employees from seeking contracts with EPA nor does it bar work on contracts with which they were involved while at EPA. Of course, representational activity involving contracts in which former employees participated is barred.

Two-Year Restrictions. Former employees who had ''official responsibility'' for particular matters involving a specific party or parties but who did not actually participate in them are barred for a period of two years from representing outside parties on such matters. This restriction applies only to particular matters which were under a former employee's official responsibility during his or her final year in the responsible position. The terms of this restriction are the same as those of the permanent restriction.

In addition, former Presidential appointees and other employees who have been designated as *senior employees* by the Office of Government Ethics are prohibited for two years from assisting an outside party *by personal presence* in connection with particular matters involving a specific party or parties in which such employees ever participated personally and substantially. This means that a former *senior employee* may not attend a meeting or hearing to assist an outside party's representative where such a matter will be discussed, even if the former employee does not directly communicate with intent to influence. The *senior employee* list is reviewed annually and is published at 5 CFR 737.33.

One-Year Restrictions. Former employees who served for more than 60 days in *senior employee* positions (see 5 CFR 737.33) and who left EPA after February 28, 1980, are subject to a one-year *quarantine* which prohibits any communication with EPA with intent to influence on any matter, including rulemaking, regardless of whether such former employees participated in the matter. There are several exceptions to the one-year restrictions, which are set forth in 5 CFR part 737.

Partners of Current Employees. The prohibition of 18 U.S.C. 207(g) bars partners of current regular and special Government employees from acting as *agent or attorney* where the current employee would be barred

from doing so under 18 U.S.C. 207(a) or 18 U.S.C. 207(b) after he or she leaves the Government. However, after the employee leaves the Government the statutory restriction on partners does not apply. (Lawyers should be aware that the Code of Professional Responsibility, as implemented by most local bar associations, continues to bar such activity by partners of former employees unless the Agency grants a waiver based on screening the former employee from participation and sharing in fees.)

Examples

1. An EPA employee served on a technical evaluation panel for a contract award. After he left EPA, he went to work for the contractor and was assigned to work as project manager for the contract he helped to award. A dispute arises over the meaning of a contract provision and the company's management asks the former employee to present the company's point of view to EPA.

Answer: He may not do so because the contractual matter involved a specific party—the offeror—at the time the former employee participated. It is the same particular matter, and presenting the company's position to EPA would amount to communicating with intent to influence. Note, however, that it is proper for the employee to work on the contract.

2. Same situation, except that the company merely asks the former employee to prepare a written submission to EPA for the signature of the company's president.

Answer: The former employee may do so because the statute bars only representational activity, not aid and assistance.

3. A former EPA attorney advised the Office of Air Quality Planning and Standards on a draft emission standard. After she leaves, a private client engages her to represent a company in a court proceeding in which the application of the rule is at issue.

Answer: She may do so, since rulemaking is not ''a particular matter involving a specific party or parties.''

4. A former Regional Administrator was responsible for an enforcement proceeding during his final year at EPA, but did not personally participate in the matter. Immediately after his resignation from EPA, the firm which was the subject of the enforcement action asks the former Regional Administrator to discuss settlement with EPA and the Justice Department.

Answer: He may not do so during the first two years after leaving EPA. Moreover, since Regional Administrators are *senior employees* they generally may not communicate with EPA with intent to influence on any matter whatever for a period of one year.

18 U.S.C. 208

Acts affecting a personal financial interest.

(a) Except as permitted by subsection (b) hereof, whoever, being an officer or employee of the executive branch of the United States Government, of any independent agency of the United States, or of the District of Columbia, including a special Government employee, participates personally and substantially as a Government officer or employee, through decision, approval, disapproval, recommendation, the rendering of advice, investigation, or otherwise, in a judicial or other proceeding, application, request for a ruling or other determination, contract, claim, controversy, charge, accusation, arrest, or other particular matter in which, to his knowledge, he, his spouse, minor child, partner, organization in which he is serving as officer, director, trustee, partner, or employee, or any person or organization with whom he is negotiating or has any arrangement concerning prospective employment, has a financial interest—

Shall be fined not more than $10,000, or imprisoned not more than 2 years, or both.

(b) Subsection (a) hereof shall not apply (1) if the officer or employee first advises the Government official responsible for appointment to his position of the nature and circumstances of the judicial or other proceeding, application, request for a ruling or other determination, contract, claim, controversy, charge, accusation, arrest, or other particular matter and makes full disclosure of the financial interest and receives in advance a written determination made by such official that the interest is not so substantial as to be deemed likely to affect the integrity of the services which the Government may expect from such officer or employee, or (2) if, by general rule or regulation published in the FEDERAL REGISTER, the financial interest has been exempted from the requirements of clause (1) hereof as being too remote or too inconsequential to affect the integrity of Government officers' or employees' services.

Discussion

This prohibition applies to rulemaking and policy matters which directly and predictably affect employees' financial interests as well as to grants, contracts and adjudications. For example, an employee who owns stock in a steel company may not participate in the development of new source performance standards for the steel industry. However, the employee may participate in developing ambient air quality standards because such rules would not distinctively affect the steel industry. Moreover, the restriction applies to parent and subsidiary companies of the firm in which an employee holds stock. Unless a waiver is granted under 18 U.S.C. 208(b), the restriction is rigid. The

size of the financial interest is irrelevant, as is the employee's level of responsibility. Moreover, it does not matter that the organization in which the employee or the employee's spouse or minor child, etc., has a financial interest is a non-profit or public interest group, since such groups nonetheless have financial interests which the employee's EPA duties may affect. (See Section 3.301 concerning waivers under 18 U.S.C. 208(b)).

Retirement plans maintained by a former employer may also amount to a financial interest, depending on the circumstances. For example, a fund managed by a former employer which includes company stock would create a personal financial interest, whereas a pension plan of a State government which is managed by a separate trustee and in which the former employee's right have vested would not create a personal financial interest in the State government in which an EPA employee formerly served. Employees are encouraged to seek the advice of the Designated Agency Ethics Official regarding pension plans.

Examples

1. An employee at grade GS–11 owns 10 shares of common stock in a smelting company which will be required to install additional pollution control equipment if a proposed new source performance standard is promulgated. The employee's EPA duties ordinarily include reviewing drafts of regulations and providing comments.

Answer: The employee may not comment on the regulation, since this would be participation in a matter in which she has a financial interest. However, the Designated Agency Ethics Official might grant a waiver under 18 U.S.C. 208(b) in such a case.

2. Same as above, except that the financial interest is part of a trust bequeathed by the employee's deceased parents for the benefit of her minor children.

Answer: The result is the same, since the prohibition extends to the financial interests of employees' minor children.

3. An employee is the treasurer of an environmental group which has applied to EPA for a grant. The employee receives no pay for this activity.

Answer: The employee is barred from participating in any way, even by advice or recommendation, in the EPA decision on the application, since he is an officer of an organization which has a financial interest in the matter.

4. An EPA employee is serving as Project Officer on a contract with a consulting firm to study emission control technologies for the steel industry. The consulting firm approaches the EPA employee to discuss possible future employment with the firm. The employee indicates that she will consider the matter.

Answer: Until she rejects the offer or the offer is withdrawn, the employee must disqualify herself from any action as Project Officer, since any such action would be likely to affect the financial interests of an organization with which she is negotiating for employment.

5. An EPA employee works in pesticides registration. As part of a retirement plan, his wife holds stock in a company which manufactures pesticides.

Answer: The employee may not participate in processing any application from the firm in which his wife holds stock.

18 U.S.C. 209

Salary of Government officials and employees payable only by United States.

(a) Whoever receives any salary, or any contribution to or supplementation of salary, as compensation for his services as an officer or employee of the executive branch of the United States Government, of any independent agency of the United States, or of the District of Columbia, from any source other than the Government of the United States, except as may be contributed out of the treasury of any State, county, or municipality; or

Whoever, whether an individual, partnership, association, corporation, or other organization pays, or makes any contribution to, or in any way supplements the salary of, any such officer or employee under circumstances which would make its receipt a violation of this subsection—

Shall be fined not more than $5,000 or imprisoned not more than one year, or both.

(b) Nothing herein prevents an officer or employee of the executive branch of the United States Government, or of any independent agency of the United States, or of the District of Columbia, from continuing to participate in a bona fide pension, retirement, group life, health or accident insurance, profitsharing, stock bonus, or other employee welfare or benefit plan maintained by a former employer.

(c) This section does not apply to a special Government employee or to an officer or employee of the Government serving without compensation, whether or not he is a special Government employee, or to any person paying, contributing to, or supplementing his salary as such.

(d) This section does not prohibit payment or acceptance of contributions, awards, or other expenses under the terms of the Government Employees Training Act (Pub. L. 85–507, 72 Stat. 327; 5 U.S.C. 2301–2319, July 7, 1958).

Discussion

This provision bars supplementation of a regular employee's Government.

The restriction does not apply to payments by States, counties or municipalities. For example, an employee on a leave of absence under the Intergovernmental Personnel Act could receive a higher salary from the receiving agency than he or she would have received from the Government.

The restriction does not forbid receipt of outside earned or investment income nor does it generally apply to pension or employee welfare or benefit plans maintained by former employers.

[49 FR 7530, Feb. 29, 1984, as amended at 50 FR 39623, Sept. 27, 1985]

APPENDIX B TO SUBPART A—OTHER PROVISIONS '

1. House Concurrent Resolution 175, 85th Congress, 2d Session, 72 Stat. B12, ''Code of Ethics for Government Service.''

2. Chapter 11 of title 18, United States Code, relating to bribery, graft, and conflicts of interests.

3. The prohibition against lobbying with appropriated funds (18 U.S.C. 1913).

4. Disloyalty and striking (5 U.S.C. 7311; 18 U.S.C. 1918).

5. Disclosure of classified information (18 U.S.C. 798, 50 U.S.C. 783) and disclosure of confidential information (18 U.S.C. 1905).

6. Habitual excessive use of intoxicants (5 U.S.C. 7352).

7. Misuse of Government motor vehicles or aircraft (31 U.S.C. 638a(c)).

8. Misuse of the franking privilege (18 U.S.C. 1719).

9. Deceit in an examination or personnel actions in connection with Government employment (18 U.S.C. 1917).

10. Fraud or false statements in a Government matter (18 U.S.C. 1001).

11. Mutilating or destroying a public record (18 U.S.C. 2071).

12. Counterfeiting and forging transportation requests (18 U.S.C. 508).

13. Embezzlement of Government money or property (18 U.S.C. 641); failing to account for public money (18 U.S.C. 643); embezzlement of money or property (18 U.S.C. 564).

14. Unauthorized use of documents relating to claims from or by the Government (18 U.S.C. 285).

15. Proscribed political activities (Hatch Act—5 U.S.C. 7324–7327; 18 U.S.C. 602, 603, 607, and 608).

16. Acting as the agent of a foreign principal registered under the Foreign Agents Registration Act (18 U.S.C. 219).

17. Acceptance of excessive honorariums (2 U.S.C. 411i).

18. Outside earned income in excess of 15% of the salaries of Presidential appointees (5 U.S.C. App. I).

APPENDIX C TO SUBPART A—PROCEDURES FOR ADMINISTRATIVE ENFORCEMENT OF POST-EMPLOYMENT RESTRICTIONS

1. Purpose

The purpose of this Appendix is to implement provisions of The Ethics in Government Act which concern restrictions on post-EPA employment. This Appendix contains procedures which EPA follows whenever it believes that a former EPA employee has violated 18 U.S.C. 207 (a), (b), or (c), as implemented by 5 CFR part 737.

AUTHORITY: 18 U.S.C. 207 (a), (b), (c), as implemented by 5 CFR part 737.

2. Delegation

The Administrator delegates the authority to carry out this Appendix to the Inspector General, with the following exceptions:

(a) A member of the Environmental Appeals Board or its designee is the presiding official as provided by paragraph 9(a) of this appendix;

(b) The Designated Agency Ethics Official has the authority to designate the Agency Counsel, as provided by paragraph 9(b) of this appendix;

(c) The Deputy Administrator has the authority to impose appropriate administrative sanctions, as provided by paragraph 13 of this appendix.

3. Preliminary Review and Referral of Information About Violations

The Inspector General receives and reviews written or oral information concerning a possible violation of the post-employment restrictions of 18 U.S.C. 207 (a), (b) or (c) as implemented by 5 CFR part 737. The Inspector General reviews the information to determine whether the matter is clearly frivolous and does not merit further action. If the Inspector General determines that the matter merits further action, the Inspector General informs the Director of the Office of Government Ethics and consults with the Criminal Division of the Department of Justice regarding the conduct of an investigation. The purpose of the consultation is to avoid prejudicing any criminal proceeding that the Justice Department may have under consideration.

4. Investigation by the Inspector General

If the Criminal Division of the Justice Department agrees that EPA should handle the matter, the Inspector General conducts an investigation of the possible violation of the post-employment restrictions of 18 U.S.C. 207 (a), (b) or (c).

5. Initiating Process To Impose Sanctions: Notice

If the Inspector General's investigation establishes that there are reasonable grounds to believe that a former EPA employee has violated the post-employment restrictions of 18 U.S.C. 207 (a), (b) or (c), the Inspector General may initiate the process of imposing sanctions under 18 U.S.C. 207(j). The Inspector General sends the former EPA employee a written notice of charges and a copy of this appendix.

The notice of charges describes the allegations against the former employee in sufficient detail to enable the former employee to prepare an adequate defense and contains the following final paragraph:

You may request a hearing by mailing or otherwise furnishing written notice of your request to me within 30 days after the date you receive this notice of charges. If you do not request a hearing within 30 days, the Agency may nonetheless determine that you have violated the provisions of 18 U.S.C. 207 (a), (b), or (c) as implemented by 5 CFR part 737 and impose administrative sanctions set forth in paragraph 15 of the enclosed Appendix to 40 CFR part 3, Subpart A. You have a right to counsel, at your own expense, at all stages of this administrative enforcement proceeding. The procedures for administrative enforcement of the post-employment restrictions are set forth in the enclosed appendix.

6. Request for a Hearing

A former EPA employee must request a hearing within 30 days after receiving the notice of charges. Otherwise, the initial determination of the charges is made without a hearing.

7. Initial Decision Without a Hearing

If a former EPA employee fails to make a timely request for a hearing, the Inspector General prepares an initial decision in writing. The Inspector General furnishes this decision to the former employee within 60 days after the time for requesting a hearing expires. The initial decision sets forth the findings of fact and conclusions of law on which it is based.

8. Appeal of an Initial Decision Made Without a Hearing

A former employee may appeal an initial decision made without a hearing. The appeal must be submitted to the Deputy Administrator in accordance with paragraph 10(b) of this appendix.

9. Initial Decision After a Hearing

If the former employee requests a hearing, an initial decision is made after a hearing takes place.

(a) *The Presiding Official.* A member of the Environmental Appeals Board or its designee presides at the hearing. The Presiding Official, if not a member of the Environmental Appeals Board, must be an attorney and an employee of the Environmental Protection Agency. If the Environmental Appeals Board designates a Presiding Official other than one of its members, it must promptly notify the former employee and the Inspector General of the Presiding Official's name, address and telephone number.

The Presiding Official shall conduct the hearing in a fair and impartial manner and issue an initial decision as promptly as possible after the record is complete, but in no event later than 60 days after the hearing is completed. No person who has participated in any way in the investigation or in the decision to initiate administrative enforcement, or who is a subordinate of the Agency Counsel, or who has had any connection or dealings with the former employee may serve as Presiding Official. The Environmental Appeals Board may remove a Presiding Official for cause.

(b) *Appointment of Agency Counsel.* The Designated Agency Ethics Official shall designate an attorney to act as Agency Counsel. The Designated Agency Ethics Official notifies the Presiding Official and the former employee (or if the former employee is represented by counsel, his or her attorney) of the name, address and telephone number of the Agency Counsel.

(c) *Hearings.* Hearings will be held at EPA Headquarters in Washington, DC, or at an EPA regional office or laboratory. After conferring with the parties, the Presiding Official shall set a reasonable time, date and place for the hearing with due regard for the former employee's need for adequate time to prepare a defense and the need to expeditiously resolve allegations which may damage the former employee's reputation. At least 15 days before the date set for the hearing, the Presiding Official notifies the parties of the time, date and place of the hearing. Hearings will be as informal as reasonably possible, consistent with establishing an orderly record. Federal rules of evidence do not control the hearing, although the Presiding Official may use these rules as guidance. The Presiding Official generally will admit evidence unless it is clearly irrelevant, immaterial or unduly repetitious. The parties have the right to:

(i) Introduce and examine witnesses;

(ii) Offer documentary evidence;

(iii) Confront and cross-examine adverse witnesses; and

(iv) Present oral argument in the form of brief opening and closing statements.

In addition, the former employee has the right:

(i) To represent himself or herself or be represented by counsel at all stages of administrative enforcement; and

(ii) To require that all persons be excluded from the hearing room except the reporter, the Presiding Official, the Agency Counsel and witnesses during the time they are actually testifying.

Witnesses shall testify under oath or affirmation administered by the Presiding Official.

The Presiding Official must arrange for a transcript of the hearing through the EPA Procurement and Contracts Management Division using the funds of the Office of Administration. The former employee is entitled to a copy of the transcript at no charge, and the Presiding Official must furnish it as soon as it is received from the reporter.

(d) *Burden of Proof.* The Agency has the burden of proof and must establish a violation by clear and convincing evidence.

(e) *Initial Decision.* The Presiding Official must make an initial decision exclusively on matters of record in the proceeding. The initial decision must be made within 60 days after the hearing and must set forth the findings of fact and conclusions of law on which it is based. The Presiding Official must furnish the decision to the former employee or his/her counsel and to the Agency Counsel and the Inspector General.

10. Appeal of an Initial Decision Made After a Hearing

(a) *Initial Decision After a Hearing.* The initial decision of the Presiding Official becomes the final Agency decision unless, within 30 days after receiving the initial decision, either party appeals by mailing or otherwise furnishing to the Deputy Administrator written notice of appeal, with a copy to the opposing party. The notice of appeal may discuss the reasons why the party contends that the initial decision is erroneous, subject to the right of the opposing party to present a written response to the Deputy Administrator within 30 days after receiving a copy of the notice of appeal.

The Deputy Administrator must base his or her decision solely on the record of the proceedings or those portions cited by the parties to limit the issue and the notice of appeal and response. If the Deputy Administrator modifies or reverses the initial decision, he or she must state in writing why the initial decision was erroneous.

(b) *Initial Decision Without a Hearing.* If the former employee did not request a hearing, the initial decision of the Inspector General will become the final Agency decision unless the former employee submits a written notice of appeal to the Deputy Administrator within 30 days after receipt of the initial decision, with a copy to the Inspector General. The notice of appeal may discuss reasons why the initial decision is erroneous, subject to the right of the Inspector General to present a written response to the Deputy Administrator within 30 days after receiving the notice of appeal. The Deputy Administrator's review will be based on an examination of the Inspector General's evidence and any legal arguments which the former employee or the Inspector General presents.

11. Ex Parte Communications (Communications Outside the Record)

Neither a Presiding Official nor the Deputy Administrator will receive from any person any written or oral communication outside the record about the merits of an administrative enforcement proceeding or appeal. This does not apply to ex parte discussions concerning administrative functions or procedures under this Appendix, or to consultations between the Deputy Administrator and staff members who assist the Deputy Administrator.

12. Calculating Deadlines

If a deadline falls on a Saturday, Sunday or federal holiday, the next working day is considered the deadline.

13. Administrative Sanctions

Whenever a final determination is made that a former employee has violated 18 U.S.C. 207 (a), (b) or (c) as implemented by 5 CFR part 737, the Deputy Administrator may impose an appropriate administrative sanction, which may include one or more of the following:

(i) Prohibiting the former employee from making on behalf of any other person (except the United States) any formal or informal appearance before, or, with the intent to influence, any oral or written communication on any matter of business for a period not to exceed 5 years. This will be accomplished by a memorandum to all EPA employees directing them to refuse to participate in any such appearance or to accept any such communication during the restriction period.

(ii) Debarring the former employee from receiving any EPA contract, grant, cooperative agreement or loan for a period of up to 3 years, provided that the violation was committed in the context of seeking or performing a government contract, grant, cooperative agreement or loan.

(iii) A written reprimand.

The Deputy Administrator may confer with the parties before deciding upon an administrative sanction. The former employee must be notified of any administrative sanction by certified mail, return receipt requested.

14. Confidentiality.

All records and information regarding administrative enforcement proceedings under this appendix will be kept confidential and

will not be disclosed except as required by law or regulation.

15. Judicial Review

Any person found to have violated 18 U.S.C. 207 (a), (b) or (c) as implemented by 5 CFR part 737, may seek judicial review of this administrative determination.

[49 FR 7530, Feb. 29, 1984, as amended at 57 FR 5323, Feb. 13, 1992]

Subpart B—Advice and Enforcement

§ 3.200 Purpose.

This subpart designates EPA officials responsible for advising employees on ethics questions and prescribes procedures for enforcing the requirements of this part. There is no attorney/client relationship between Ethics Officials and employees who seek advice; admissions to Ethics Officials of past violations are *not* privileged.

§ 3.201 Designation.

The following officials are available to advise EPA employees:

(a) The Administrator appoints a Designated Agency Ethics Official who:

(1) Acts as the principal contact with the Office of Government Ethics;

(2) Provides guidance to Deputy Ethics Officials;

(3) Collects, reviews and maintains Executive Personnel Financial Disclosure Reports and provides them to the public as required;

(4) Makes determinations and provides oral and written advice on ethics questions; and

(5) Performs all other functions under 5 CFR 738.203.

(b) The Administrator also appoints an Alternate Agency Ethics Official to assist the Designated Agency Ethics Official under 5 CFR 738.202.

(c) The Designated Agency Ethics Official may appoint Deputy Ethics Officials under 5 CFR 738.202 in addition to those listed below.

The Deputy Ethics Officials are the:

(1) Assistant Administrators;

(2) Inspector General;

(3) Office Directors reporting to Assistant Administrators;

(4) Heads of Staff Offices reporting directly to the Administrator;

(5) Laboratory Directors; and

(6) Regional Administrators.

(d) The Deputy Ethics Officials:

(1) Counsel employees on questions arising under this part;

(2) Review and maintain Confidential Statements of Employment and Financial Interests filed under subpart C of this part;

(3) Direct employees to file Confidential Statements of Employment and Financial Interest under § 3.302(c);

(4) Decide requests for approval of outside employment under Subpart E of this part; and

(5) Consult, as necessary, with the Designated Agency Ethics Official.

§ 3.202 Reporting, investigating and enforcing.

(a) Any employee who is aware of a possible violation of this part must inform the appropriate Deputy Ethics Official, the Designated Agency Ethics Official or the Inspector General.

(b) Violation of this part may be cause for disciplinary or remedial action. Remedial action may include a direction to dispose of conflicting interests, waivers under 18 U.S.C. 208(b), disqualification from particular assignments, reassignment or other action such as establishment of an appropriate trust.

Subpart C—Financial Interests and Investments

§ 3.300 Prohibitions against acts affecting a personal financial interest.

(a) As discussed in appendix A to subpart A, section 208(a) of title 18, United States Code, prohibits an employee from knowingly participating in an EPA matter in which the employee, the employee's spouse, minor child, present or prospective employer, or organization in which the employee is an officer, has a financial interest.

(b) Activities which may affect a financial interest are:

(1) Negotiating, administering or auditing contracts or assistance agreements;

(2) Selecting or approving contractors or subcontractors;

(3) Enforcement activities;

(4) Issuing permits;

(5) Registering pesticides;

(6) Certifying motor vehicles; and

(7) Rulemaking and policy matters which have a direct and predictable effect on the financial interests of companies in which the employee owns stock or has an official or employment relationships. Examples are discussed in appendix A to subpart A.

[49 FR 7530, Feb. 29, 1984, as amended at 50 FR 39623, Sept. 27, 1985]

§3.301 Waiver.

(a) The Designated Agency Ethics Official may waive the prohibition of 18 U.S.C. 208(a) for rulemaking and policy matters if the interest is not so substantial as to be deemed likely to affect the integrity of an employee's services. Employees may request such a waiver by submitting a written disclosure of the nature of the financial interest to the Designated Agency Ethics Official, together with a discussion of the employee's duties and the reasons why a waiver is appropriate.

(b) The prohibition of 18 U.S.C. 208(a) may also be waived by general regulation. Financial interests derived from the following have been determined to be too remote or too inconsequential to affect the integrity of employee's services, and employees may participate in matters affecting them:

(1) Mutual funds (including tax-exempt bond funds), except those which concentrate their investments in particular industries;

(2) Life insurance, variable annuity, or guaranteed investment contracts issued by insurance companies;

(3) Deposits in a bank, savings or loan association, credit union or similar financial institution;

(4) Real property used solely as the personal residence of an employee;

(5) Bonds or other securities issued by the U.S. Government or its agencies.

[49 FR 7530, Feb. 29, 1984, as amended at 50 FR 39623, Sept. 27, 1985]

§3.302 Financial Disclosure Reports and Confidential Statements of Employment and Financial Interest.

(a) The following employees (including employees expected to serve in an ''acting'' capacity for more than 60 days or who actually serve in such capacity for more than 60 days) are required to file public Executive Personnel Financial Disclosure Reports in accordance with 5 CFR part 734:

(1) Presidential appointees;

(2) Employees whose positions are classified at GS–16 or above of the General Schedule;

(3) Members of the Senior Executive Service;

(4) Administrative Law Judges appointed under 5 U.S.C. 3105;

(5) Schedule C employees;

(6) The Designated Agency Ethics Official, and

(7) Special Government employees whose basic daily rate of pay equals or exceeds the basic daily rate for GS–16 of the General Schedule and who are expected to perform more than 60 days of actual service during a 365 day period. (If such employees are not expected to perform more than 60 days of actual service, but nonetheless exceed 60 days, reports are due within 15 days after the 60th day of actual service.)

(See 5 CFR part 734 for reporting requirements for Presidential nominees.)

Financial Disclosure Reports must be submitted to the Designated Agency Ethics Official within 30 days after an employee assumes a covered position (unless the employee has left another covered position in the Executive Branch within the previous 30 days), by May 15 of each year (unless the Designated Agency Ethics Official or the Office of Government Ethics grants an extension) and within 30 days after leaving a covered position (unless the employee assumes another covered position in the Executive Branch within 30 days). These reports are available to the public. However, the Designated Agency Ethics Official may charge for direct reproduction costs at the rate set forth in 40 CFR 2.120(g). The Designated Agency Ethics Official may also require prepayment of any fee in accordance with 40 CFR 2.120(c) and waive fees under the circumstances described in 40 CFR 2.120(d).

(b) In addition, all employees in the following positions in grades GM or GS–13 or above (or comparable levels under other pay systems) must file Confidential Statements of Employment and Financial Interests unless they are required to file public Executive Personnel Financial Disclosure Reports:

(1) All employees who report to the General Counsel or the Assistant Administrator for Enforcement and Compliance Monitoring, and Regional Counsel employees;

(2) All employees in the immediate Office of the Administrator or Deputy Administrator;

(3) All Branch chiefs in the Facilities and Support Services Division;

(4) Employees in the Procurement and Contracts Management;

(5) Employees in the Grants Administration Division;

(6) Employees in the Office of Inspector General;

(7) Temporary experts and consultants; and

(8) Special Government employees as provided in § 3.602.

(c) The Designated Agency Ethics Official or cognizant Deputy Ethics Offical may also require employees other than those whose positions are listed above to file Confidential Statements of Employment and Financial Interest by specific written direction. The following employees should be required to file:

(1) Those in positions classified at GM or GS–13 or above (or comparable levels under other pay systems) whose duties and responsibilities require the exercise of judgment in participating in or making Government decisions with respect to:

(i) Evaluating or selecting contractors, initiating procurement requests, acting as project officer on contracts or auditing contractors;

(ii) Awarding or monitoring assistance agreements; or

(iii) Regulating private enterprise.

(2) Those in positions classified at GS–12 or below (or comparable levels under other pay systems) if their duties directly affect the financial interests of specific parties. Such positions are limited to contracting officers, project officers, inspectors, auditors and On-Scene Coordinator representatives.

(d) Other employees classified below the GM or GS–13 level (or comparable levels under other pay systems) who are in positions which otherwise meet the criteria of paragraph (c)(1) of this section may also be required to file, provided the Office of Government Ethics has approved in writing. Deputy Ethics Officials should consult with the Designated Agency Ethics Official in seeking such approval.

(e) *Financial and employment interests of employees' relatives.* In completing Confidential Statements of Employment and Financial Interests, the financial and employment interests of a spouse or minor child are considered to be interests of the employee and must be reported.

[49 FR 7530, Feb. 29, 1984, as amended at 50 FR 39623, Sept. 27, 1985]

§ 3.303 Special requirements under the Clean Air Act.

(a) Notwithstanding any other provisions of this part, employees whose positions are listed in Appendix B may not be employed by, serve as attorney for, act as consultant to, or hold any other official or contractual relationship to (other than ownership of stock, bonds, or other financial interest)—

(1) The owner or operator of any major stationary source or any stationary source which is subject to a standard of performance or emission standard under section 111 (42 U.S.C. 7411) or section 112 (42 U.S.C. 7412) of the Act;

(2) Any manufacturer of any class or category of mobile sources if such mobile sources are subject to regulation under the Act;

(3) Any trade or business association of which an owner or operator referred to in paragraph (a)(1) of this section or a manufacturer referred to in paragraph (a)(2) of this section is a member;

(4) Any organization (whether nonprofit or not) which is a party to litigation or engaged in political, educational or informational activities relating to air quality.

(b) In examining financial interest statements, reviewers must consider whether certain financial interests of a covered employee may be inconsistent with the employee's position and duties. In particular, any financial interest that presents a conflict of interest with an employee's duties under the Act is resolved under § 3.202 of this part.

(c) Under section 318(d) of the Clean Air Act, any employee subject to this provision who knowingly violates the

provisions of this section is subject to a fine of not more than $2,500 or imprisonment for not more than one year, or both.

§ 3.304 Special requirements under the Toxic Substances Control Act.

(a) Notwithstanding any other provisions of this part, members of the Interagency Testing Committee established under section 4(e) of the Toxic Substances Control Act (15 U.S.C. 2603(e)) and their designees may not:

(1) Accept employment or compensation from any person subject to any requirement of the Act, or to any rule or order issued under it, for a period of twelve months after their committee service ceases; or

(2) Hold any stocks or bonds or have any substantial pecuniary interest in any person engaged in the manufacture, processing or distribution in commerce of any substance or mixture subject to any requirement of the Act or of any rule or order issued under it.

(b) This provision is enforceable by an action for a court order to restrain violations.

§ 3.305 Special requirements under the Surface Mining Control and Reclamation Act.

(a) Notwithstanding any other provisions of this part, no employee who performs any function or duty under the Surface Mining Control and Reclamation Act (such as reviewing Environmental Impact Statements of the Office of Surface Mining in the Department of the Interior) may have a direct or indirect interest in underground or surface coal mining operations. Regulations of the Office of Surface Mining at 30 CFR 706.3 define the terms ''direct financial interest'' and ''indirect financial interest'' as follows:

(1) *Direct financial interest.* Means ownership or part ownership by an employee of land, stocks, bonds, debentures, warrants, a partnership, shares, or other holdings and also means any other arrangement where the employee may benefit from his or her holding in or salary from coal mining operations. Direct financial interests include employment, pensions, creditor, real property and other financial relationships.

(2) *Indirect financial interest.* Means the same financial relationships as for direct ownership, but where the employee reaps the benefits of such interests, including interests held by his or her spouse, minor child and other relatives, including in-laws, residing in the employee's home. The employee will not be deemed to have an indirect financial interest if there is no relationship between the employee's functions or duties and the coal mining operation in which the spouse, minor children or other resident relative holds a financial interest.

(b) Violation of these restrictions is punishable by a fine of up to $2,500 or imprisonment for not more than one year, or both.

Appendix A to Subpart C—Procedures for Filing Confidential Statements of Employment and Financial Interest

(1) *Submission*—Each employee required to submit a Confidential Statement of Employment and Financial Interests must submit the completed EPA Form 3120–1 within 30 days after entrance on duty or (where the position is not specifically listed in this part) within 30 days after being notified of the requirement to file. Interests which are exempt from the prohibition of 18 U.S.C. 208(a) (except for interests in mutual funds) need not be reported. *See* § 3.301(b). The completed form is sent to the Deputy Ethics Official for the employee's organization. Headquarters employees in the Office of General Counsel and employees in the immediate Office of the Administrator submit their forms to the Designated Agency Ethics Official.

(2) *Decisions.* When there appears to be a conflict between the employee's financial interests and the performance of Government duties, the reviewer provides the employee an opportunity to discuss the matter. Deputy Ethics Officials should discuss any such problems with the Designated Agency Ethics Official, who determines if divestiture is required. See § 3.202(c). The Inspector General may be asked to investigate the circumstances of apparent violations of the conflict of interest laws or these regulations.

(3) *Supplemental Statements*—For purposes of annual review, employees who are required to submit EPA Form 3120–1 must submit a new statement each July by no later than July 31, even if no changes have taken place during the year.

Deputy Ethics Officials must notify such employees of this requirement and must complete review of the statements within 30 days after submission. By September 30 of

each year, Deputy Ethics Officials must submit a statement to the Designated Agency Ethics Official containing the following information: (i) the number of employees in their organization at GM/GS 13–15; (ii) the number required to file; (iii) the number of other employees required to file under §3.302(c) or 3.302(d); (iv) the number of remedial actions taken by type of action (i.e., recusals, waivers, divestitures, reassignments or blind trusts); (v) a certification that no employee who performs any ''functions or duties'' under the Surface Mining Control and Reclamation Act holds any prohibited interests (see §3.305); and (6) a certification that all required reports have been received, reviewed and signed and that any necessary remedial actions have been taken.

In addition, whenever additions or changes have taken place, employees who are required to file must submit a supplemental statement by the end of the four month period in which the transactions occurred; that is, by November 30 and March 31. Deputy Ethics Officials must notify employees of this requirement during the months when these updates are due, and must review and sign the updates within 30 days after submission. However, they need not provide any report to the Designated Agency Ethics Official regarding the updates.

(4) *Confidentiality*—EPA Form 3120–1 is confidential. No information from this form may be disclosed other than to the Designated Agency Ethics Official and the Alternate Agency Ethics Official, immediate staff assistants whom the responsible Deputy Ethics Official has specifically designated in writing, the Office of Inspector General, committees or subcommittees of Congress on the written request of the chairman, or as the Director of the Office of Government Ethics or the Administrator may determine for good cause.

(5) *Maintenance of statements.* EPA Forms 3120–1 and related records must be kept in a locked container. They are retained for six years after filing and then disposed of (unless needed in an ongoing investigation).

[49 FR 7530, Feb. 29, 1984, as amended at 50 FR 39623, Sept. 27, 1985]

APPENDIX B TO SUBPART C—EMPLOYEES SUBJECT TO SPECIAL REQUIREMENTS UNDER THE CLEAR AIR ACT

The positions listed below have been determined to be of a regulatory or policymaking nature under section 318(d) of the Clean Air Act. Whenever the title of a position is listed, it includes any person who occupies the position as ''acting'' and any person who occupies a successor position under a subsequent reorganization.

Coverage:

(1) Under the Office of the Administrator: the Administrator, Deputy Administrator, Regional Administrators, General Counsel, Deputy General Counsel, Associate General Counsel for Air, Noise and Radiation, Enforcement Counsel, Deputy Enforcement Counsel, Associate Deputy Enforcement Counsel for Air and Director of the Science Advisory Board.

(2)(i) In the Office of the Administrator: Administrator, Deputy Administrator, and the Director of the Science Advisory Board.

(ii) Regional Administrators.

(iii) In the Office of General Counsel: General Counsel, Deputy General Counsel, Associate General Counsel for Air and Radiation.

(iv) In the Office of Enforcement and Compliance Monitoring: Assistant Administrator for Enforcement and Compliance Monitoring, Senior Enforcement Counsel, Associate Enforcement Counsel for Air Enforcement.

(v) In the Office of Policy, Planning and Evaluation: Assistant Administrator for Policy, Planning and Evaluation, Deputy Assistant Administrator for Policy, Planning and Evaluation, Director of the Office of Policy Analysis, Director of the Office of Standards and Regulations.

(vi) In the Office of Air and Radiation: Assistant Administrator for Air and Radiation, Deputy Assistant Administrator for Air and Radiation, Director of the Office of Policy Analysis and Review, Director of the Office of Program Development, Director of the Office of Air Quality Planning and Standards, Director of the Office of Mobile Sources, and Directors of the following Divisions: Control Programs Development, Emission Standards and Engineering, Monitoring and Data Analysis, Stationary Source Compliance, Strategies and Air Standards, Certification, Emission Control Technology, Engineering Operations, Field Operations and Support and Manufacturers Operations.

(3) *Under the Office of Air, Noise and Radiation:*

The Assistant Administrator for Air, Noise and Radiation, Director of the Office of Policy Analysis, Director of the Office of Transportation and Land Use Policy, Director of the Office of Air Quality Planning and Standards and Division Directors reporting to that official, and the Director of the Office of Mobile Source Air Pollution Control and Division Directors reporting to that official.

[49 FR 7530, Feb. 29, 1984, as amended at 50 FR 39624, Sept. 27, 1985]

Subpart D—Gifts, Gratuities, or Entertainment

§3.400 Policy.

(a) Except as provided in paragraph (d) and in §3.104(e), no employee may

directly or indirectly (for example, through spouses or children) accept any gift, gratuity, entertainment (including meals), favor, loan or any other thing of value from any person, corporation or group which:

(1) Has or is seeking to obtain contracts or assistance agreements with EPA;

(2) Has interests which may be substantially affected by the employee's performance or nonperformance of official duty;

(3) Is in any way attempting to affect the employee's official action; or

(4) Conducts activities that EPA regulates.

(b) The following are exceptions to the general rule set forth in paragraph (a):

(1) Accepting modest entertainment, such as meals or refreshments, in connection with participation in widely attended gatherings sponsored by industrial, technical or professional organizations or in connection with attendance at public ceremonies or similar activities where the employee officially represents EPA. Acceptance of ordinary *business lunches* is not permitted.

(2) Accepting gifts, favors or entertainment where there is an obvious family or personal relationship between the employee or the employee's family and the donor, and where this relationship clearly motivated the gift.

(3) Purchasing at advantageous rates offered to Government employees as a class.

(4) Accepting loans from banks or other financial institutions on customary terms.

(5) Accepting unsolicited advertising or promotional material, such as pens, pencils, note pads, calendars or other items worth less than $10 (U.S. retail).

(6) Accepting incidental transportation (such as rides to and from airports) furnished in connection with official duties and customarily provided by private organizations. (For further guidance concerning acceptance of travel and related expenses, see §3.505.)

(7) Accepting transportation, lodging and meals of modest value in connection with interviews for future employment, provided the employee is in an annual leave status at the time such interview occurs.

(8) Accepting gifts and honors from foreign governments as authorized by 5 U.S.C. 7342. (See 41 CFR part 101–49).

(9) Awards incident to training or meetings under 5 U.S.C. 4111 and 5 CFR part 410, subpart G. This requires the specific written approval of the Designated Agency Ethics Official or the Alternate Agency Ethics Official. See §3.504(c)(1).

(c) Where circumstances require temporary acceptance of a prohibited gift or gratuity, the acceptance must be reported to the Designated Agency Ethics Official who shall return it to the donor with an explanation, where practical. Otherwise, the gift or gratuity will be donated to a public or charitable institution and, where practical, the donee will be informed of the disposition. (But see 41 CFR part 101–49 regarding gifts from foreign governments.)

Subpart E—Outside Employment

§3.500 Definitions.

Outside employment or other outside activity is any work or service performed by an employee other than the performance of official duties. It includes such activities as writing and editing, publishing, teaching, lecturing, consulting, self-employment and other work or services. Employees must ensure that their outside activities may not reasonably be construed as implying official EPA endorsement of any statement, activity, product or service.

§3.501 Policy.

(a) Subject to the approval requirements of §3.508, employees may engage in outside employment or other outside activity consistent with the standards of this subpart.

(b) Employees may participate in community affairs as private citizens where consistent with these regulations. Such activities include:

(1) Speaking, writing, editing, and teaching;

(2) Participating in charitable, religious, professional, social, fraternal, nonprofit educational and recreational, public service or civic organizations;

(3) Participating in the activities of national, State and local political parties to the extent permitted under the Hatch Act (5 U.S.C. 7324–7324) and 18 U.S.C. 602, 603, 607 and 608.

[49 FR 7530, Feb. 29, 1984, as amended at 50 FR 39624, Sept. 27, 1985]

§ 3.502 Guidelines and limitations.

Outside employment and other outside activity is prohibited if it would:

(a) Violate a federal or State statute, local ordinance, Executive Order or regulation;

(b) Involve acceptance of a fee, compensation, gift, payment of expense, or other thing of monetary value under circumstances which would result in, or create the appearance of, a conflict of interest;

(c) Bring discredit upon the Government or EPA, or lead to relationships which would impair public confidence in the integrity of the Government or EPA;

(d) Involve work with any EPA contractor or subcontractor on an EPA project or work with any holder of an EPA assistance agreement or subagreement on an EPA project (unless the Designated Agency Ethics Official approves work on such acquisition or assistance agreement in writing) or would involve work for any person or organization in a position to gain advantage through the employee's exercise of official duties;

(e) Involve use of the employee's time during official working hours;

(f) Involve use of official facilities (for example, office space, telephones, office machines or supplies) or the services of other employees during duty hours;

(g) Interfere with the efficient performance of Government duties or impair the employee's mental or physical capacity to perform such duties;

(h) Involve use of information obtained as a result of Government employment which has not been made available to the general public.

[49 FR 7530, Feb. 29, 1984, as amended at 50 FR 39624, Sept. 27, 1985]

§ 3.503 Distinction between official and outside activities.

Writing, speaking, or editing is normally *official* if it results from a request to EPA to furnish a speaker, author or editor. If an invitation is addressed to an employee, the invitation is *official* if it is tendered because of the employee's EPA position rather than the employee's individual knowledge or accomplishments. The fact that an activity is prepared for or performed outside normal duty hours is not controlling. Otherwise, such activities are *outside* activities for purposes of § 3.500.

§ 3.504 Compensation, honorariums, travel expenses.

(a) Employees may accept compensation for permissible outside employment or other outside activity. However, under 2 U.S.C. 441 no employee may accept any honorarium of more than $2,000 for any single appearance, speech or article. In addition, Presidential appointees are prohibited from receiving outside earned income in any year in excess of 15% of their Government salaries. See section 210 of Public Law 95–521, 5 U.S.C. App. 1.

(b) Except as provided below, travel expenses for official activities must be paid by the Government. Conversely, appropriated funds must not be used for nonofficial travel.

(c) The Comptroller General has ruled that acceptance of official travel expenses from outside sources is an impermissible augmentation of agency appropriations in the absence of specific statutory authority. Accordingly, employees may not accept official travel expenses except for:

(1) Attendance at meetings, if paid by organizations listed under section 501(c)(3) of the Internal Revenue Code (*see* 5 U.S.C. 4111), and the prior written approval of the Designated Agency Ethics Official or the Alternate Agency Ethics Official is obtained;

(2) Travel entirely outside the United States paid by foreign governments or public international organizations (5 U.S.C. 7342(c)(1));

(3) Details to State and local governments and to domestic universities and *other organizations* under the Intergovernmental Personnel Act (5 U.S.C. 3374–3375);

(4) Details to public international organizations in which the United States participates as a government (5 U.S.C. 3343);

(5) Details to foreign governments (this requires State Department approval);

(6) Travel approved by the State Department under the Mutual Educational and Cultural Exchange Program of title 22, U.S. Code, Chapter 33;

(7) Travel expenses of EPA witnesses for non-Government parties (5 U.S.C. 5751).

§ 3.505 Special conditions which apply to teaching, lecturing and speechmaking.

In addition to the limitations of §§ 3.502 and 3.504(a), employees may engage in outside activities involving teaching, lecturing and speechmaking only if:

(a) Such activities are conducted on the employees' own time without the use of Government property or personnel;

(b) Government travel or per diem funds are not used;

(c) The activities are not for the purpose of special preparation for a civil service or foreign service examination and do not involve the use of information obtained as a result of Government employment that has not been made available to the general public;

(d) The activities do not involve instruction on dealing with specific matters pending before EPA.

§ 3.506 Special conditions applicable to outside writing and editing activities.

(a) Subject to the limitations of §§ 3.502 and 3.504(a) and this section, employees may serve as editors and editorial consultants, or on editorial boards, and may contribute articles to publications.

(b) Writing and editing, whether related or unrelated to an employee's official duties, must not express or imply official support in either the material itself or in advertising or promotional material, including book jackets and covers.

(c) Writing or editing, whether related to an employee's official duties or not, must either omit mention of the employee's official title or affiliation with the Agency, or include a disclaimer substantially as follows:

''This (article, book, etc.) was (written, edited) by (employee's name) in his/her private capacity. No official support or endorsement by the Environmental Protection Agency or any other agency of the Federal Government is intended or should be inferred.''

§ 3.507 Special conditions applicable to publishing.

Employees may engage in publishing activities when:

(a) No income is derived from publishing materials which EPA makes available to the general public or which are available to the employee because of his or her official duties but are not available to the general public; and

(b) No income is derived from publishing proceedings or compilations of conferences, symposia or similar gatherings or publishing speeches which are sponsored by the Government or which involve the performance of official duties.

[49 FR 7530, Feb. 29, 1984, as amended at 50 FR 39624, Sept. 27, 1985]

§ 3.508 Administrative approval.

In addition to avoiding prohibited outside employment, each employee must obtain administrative approval in accordance with appendix A to this subpart before engaging in the following types of outside employment:

(a) Regular self-employment;

(b) Consulting services;

(c) Holding State or local public office;

(d) Outside employment or other outside activity involving an EPA contractor or subcontractor or holder of an EPA assistance agreement or subagreement; and

(e) Employment by a firm which is regulated by the EPA program Office or Regional Office in which the employee serves.

Employees are encouraged to seek the advice of Deputy Ethics Officials or the Designated Agency Ethics Official regarding other types of outside employment.

[49 FR 7530, Feb. 29, 1984, as amended at 50 FR 39624, Sept. 27, 1985]

APPENDIX A TO SUBPART E—PROCEDURES FOR PERMISSION TO ENGAGE IN OUTSIDE EMPLOYMENT OR OTHER OUTSIDE ACTIVITY

1. *Form and content of request*—A written request for administrative approval of outside employment must be addressed to the appropriate Deputy Ethics Official, or, in the immediate Office of the Administrator or Deputy Administrator, to the Designated Agency Ethics Official. The request must be sent through the employee's supervisors and must indicate:

a. Employee's name, title and grade;

b. Nature of the outside activity, including a full description of the services to be performed and the amount of compensation expected;

c. The name and business of the person or organization for which the work will be done (in cases of self-employment, indicate the type of services to be rendered and estimate the number of clients or customers anticipated during the next 6 months);

d. The estimated time to be devoted to the activity;

e. Whether the service will be performed entirely outside of normal duty hours (if not, estimate the number of hours of absence from work required);

f. The assistance agreements or contracts involved, if the outside employment will include consulting or professional services to institutions which have or may seek federal assistance agreements or contracts. Full details must be provided for any service which involves preparing grant applications, contract proposals or program reports. Indicate the basis for compensation (e.g., fee, per diem, per annum, etc.).

2. *Acting on employee requests*—Requests are reviewed for consistency with § 3.502. Reviewers are encouraged to obtain advice from the Designated Agency Ethics Official. The reviewer's decision must be in writing.

3. *Keeping the record up-to-date*—If there is a change in the nature or scope of the duties or services performed or the nature of the employee's business, the employee must submit a revised request for approval.

4. *Enforcement*—Failure to obtain administrative approval for outside employment or other outside activity where required is grounds for disciplinary action.

5. *Confidentiality of requests*—Requests for approval are confidential and, unless the employee consents, may not be disclosed except to the Designated Agency Ethics Official or the Alternate Agency Ethics Official and designated staff who assist them under this part and to Deputy Ethics Officials and designated staff members who assist them under this part.

[49 FR 7530, Feb. 29, 1984, as amended at 50 FR 39624, Sept. 27, 1985]

Subpart F—Standards of Conduct for Special Government Employees

§ 3.600 Applicability.

The conflict of interest statutes and these regulations apply to special Government employees during their entire period of EPA service, from the date of the oath of office to the date of termination.

§ 3.601 Standards of conduct.

The following standards of conduct apply to special Government employees:

(a) *Use of Government employment.* Special Government employees may not use Government employment for a purpose that is, or gives the appearance of being, motivated by private gain for themselves or others.

(b) *Use of inside information.* Special Government employees may not use inside information obtained as a result of Government employment for private gain. *Inside information* means information obtained as a result of Government employment which has not been made available to the general public.

(c) *Avoiding coercion.* Special Government employees may not use Government employment to coerce anyone to provide a financial benefit to themselves or others.

(d) *Gifts, entertainment or favors.* Except as provided below, special Government employees must not solicit or receive any gift, gratuity, entertainment (including meals), favor, loan or other thing of value, for themselves or others, from persons or organizations having contracts or assistance agreements with EPA or which conduct activities regulated by EPA. The following exceptions apply:

(1) Receiving salary, bonuses or other compensation or benefits from non-Government employers;

(2) Accepting modest entertainment, such as meals or refreshments, in connection with attendance at widely attended gatherings sponsored by industrial, technical or professional organizations, or in connection with attending public ceremonies or similar activities where the special Government employee officially participates on behalf

of EPA (this does not include ordinary *business lunches*);

(3) Accepting gifts, favors or entertainment where there is an obvious family or personal relationship between the employees or their families and the donor, and where that relationship clearly motivates the gift;

(4) Accepting loans from banks or other financial institutions on customary terms;

(5) Accepting unsolicited advertising or promotional material, such as pens, pencils, note pads, calendars or other items worth less than $10 (U.S. retail);

(6) Accepting incidental transportation in kind from a private organization (such as rides to and from airports) furnished in connection with official duties and customarily provided by the private organization.

(e) *Gifts and honors from foreign governments.* A special Government employee is not authorized to accept a gift, decoration, or other thing from a foreign government, except as authorized by 5 U.S.C. 7342. (See also 41 CFR part 101–49.)

(f) *Official travel expenses* as authorized by §3.505.

§3.602 Statements of employment and financial interest.

(a) Each special Government employee must submit a Statement of Employment and Financial Interests, EPA Form 3120–1, at the time of initial appointment except where the special Government employee is required to file a public Financial Disclosure Report (SF 278). Annual supplemental statements are also due by July 31 of each year. In addition, if changes occur in the employee's financial interests or investments, a supplemental report is also due by the end of the four month period in which the transaction occurs; that is, by November 30 and March 31.

(b) The Statement of Employment and Financial Interests must be submitted to the cognizant Deputy Ethics Official or to the Designated Agency Ethics Official, as appropriate. (See §3.201.) Public Financial Disclosure Reports must be submitted to the Designated Agency Ethics Official. (See §3.302.)

Special government employees often have income from other employers, and all such sources of income must be reported. For example, researchers and analysts must disclose the sources of their research contracts, and, where employees of universities or other public bodies or business organizations are working on projects supported by outside parties, the contributors must be identified.

(c) The purpose of the Statement of Employment and Financial Interests is to assist the employee and the Agency in avoiding conflicts of interest. The statement is confidential and will not be disclosed except to the Designated Agency Ethics Official and the Alternate Agency Ethics Official and designated staff members who assist them under this part and to Deputy Ethics Officials and members of their staffs who assist them under this part. The statements will not otherwise be disclosed except to the Office of Inspector General, to committees or subcommittees of Congress on written request, or as authorized by the Administrator or the Director of the Office of Government Ethics for good cause.

(d) Submitting a Statement of Employment and Financial Interests does not relieve employees of the duty to comply with the law. Employees must continue to refrain from participation where prohibited by 18 U.S.C. 208(a). (See §3.606(d).)

(e) Information concerning financial interests which have been exempted from the prohibition of 18 U.S.C. 208(a) may be omitted. (See §3.301(b) of this part.)

(f) The following special Government employees are not required to file a Statement of Employment and Financial Interest:

(1) Temporary and summer employees under 5 U.S.C. 5332 below the grade of GS–13;

(2) Employees participating in intern or other training programs.

§3.603 Review, enforcement, reporting and investigation.

(a) Statements of Employment and Financial Interests are reviewed by the cognizant Deputy Ethics Official or, in the immediate Office of the Administrator, by the Designated Agency Ethics Official. If the review discloses an actual or apparent conflict of interest,

the matter will be discussed with the employee. If necessary, the Deputy Ethics Official or the Designated Agency Ethics Official may: (1) Direct the employee not to paticipate in certain matters; (2) arrange a reassignment with the employee's supervisor; or (3) the Designated Agency Ethics official may grant a waiver under 18 U.S.C. 208(b) or direct the employee to divest.

(b) Special Government employees are encouraged to consult with the Designated Agency Ethics Official or the cognizant Deputy Ethics Official if they have questions concerning this subpart.

(c) Violation of these regulations may be cause for disciplinary action, and the Inspector General may be asked to investigate alleged or apparent violations.

[49 FR 7530, Feb. 29, 1984, as amended at 50 FR 39624, Sept. 27, 1985]

§ 3.604 Application of conflict-of-interest statutes.

The *conflict-of-interest* statutes (18 U.S.C. 203, 205, 207, 208 and 209) are set forth in appendix A to subpart A of this part. They apply to special Government employees as follows:

(a) Sections 203 and 205 of title 18, United States Code, provide generally that a special Government employee may not:

(1) Represent anyone else before a court or any Government agency in connection with a *particular matter involving a specific party or parties* in which the United States is a party or has a direct and substantial interest, and in which the employee has ever participated *personally and substantially* as a Government employee; or

(2) Act as *agent or attorney*, that is, communicate with intent to influence on behalf of another, in connection with a *particular matter involving a specific party or parties* pending in EPA, if he or she has served as an EPA employee for more than 60 days during the preceding 365 days. This restriction applies regardless of whether the special Government employee has participated in the matter.

(b) Under 18 U.S.C. 207, former special Government employees may not act as *agent or attorney*, that is, communicate with intent to influence, on behalf of anyone other than the United States before any Federal agency or court in connection with a *particular matter involving a specific party or parties* in which the United States is a party or has a direct and substantial interest and in which they participated *personally and substantially* as Government employees. The two-year restriction of 18 U.S.C. 207(b) is unlikely to affect special Government employees because they are not likely to have exercised *direct supervisory or operating responsibility*. Likewise, the one-year *quarantine* of 18 U.S.C. 207(c) probably will not apply because special Government employees are unlikely to be designated as *senior employees*. See 5 CFR 737.33.

(c) Under 18 U.S.C. 207(g), during the entire period of the special Government employee's appointment, partners of special Government employees are forbidden to act as agent or attorney in connection with *particular matters* in which the United States is a party or has a direct and substantial interest and in which the special Government employee is participating or has participated *personally and substantially* as a special Government employee or which are under the special Government employee's *official responsibility*. This restriction applies to policy and rulemaking matters as well as to contracts, grants and adjudications. However, it applies only during the period of a special Government employee's service.

(d) Under 18 U.S.C. 208 special Government employees are forbidden to participate *personally and substantially* in any *particular matter* in which, to their knowledge, they, their spouses, minor children, partners, organizations in which they are serving as officers, directors, trustees, partners or employees or any persons or organizations with whom they are negotiating or have any arrangement concerning prospective employment, have a financial interest. However, the Designated Agency Ethics Official may waive this restriction if *the interest is not so substantial as to be deemed likely to affect the integrity of the services*. Requests for waiver must be addressed to the Designated Agency Ethics Official and must specifically set forth the nature

and amount of the financial or employment interest and explain why a waiver should be granted.

The general exemptions of appendix A to §3.301(b) of this part apply to both regular and special Government employees.

(e) Section 209 of title 18, United States Code, does not apply to special Government employees.

§3.605 Other statutes.

(a) *Bribery*. Section 201 of title 18, United States Code, prohibits soliciting, receiving or agreeing to receive, directly or indirectly, anything of value in connection with the performance of official duties or in return for committing or aiding in the commission of a fraud on the United States.

(b) *Disclosure of confidential information*. Section 1905 of title 18, United States Code, prohibits disclosing, in any manner and to any extent not authorized by law, any information acquired in the course of Government employment or official duties which concerns or is related to the trade secrets, processes, operations, style or work or apparatus or to the identity, confidential statistical data, amount or source of any income, profits, losses or expenditures of any person, business entity or association.

(c) Other statutes which apply to both regular and special Government employees are listed in appendix B to subpart A of this part.

PART 4—UNIFORM RELOCATION ASSISTANCE AND REAL PROPERTY ACQUISITION FOR FEDERAL AND FEDERALLY ASSISTED PROGRAMS

AUTHORITY: Section 213, Uniform Relocation Assistance and Real Property Acquisition Policies Act of 1970, as amended by the Surface Transportation and Uniform Relocation Assistance Act of 1987, Title IV of Pub. L. 100–17, 101 Stat. 246–256 (42 U.S.C. 4601 note).

§4.1 Uniform relocation assistance and real property acquisition.

Effective April 2, 1989, regulations and procedures for complying with the Uniform Relocation Assistance and Real Property Acquisition Policies Act of 1970 (Pub. L. 91–646, 84 Stat. 1894, 42 U.S.C. 4601), as amended by the Surface Transportation and Uniform Relocation Assistance Act of 1987 (Pub. L. 100–17, 101 Stat. 246–255, 42 U.S.C. 4601 note) are set forth in 49 CFR part 24.

[52 FR 48023, Dec. 17, 1987 and 54 FR 8912, Mar. 2, 1989]

PART 5—TUITION FEES FOR DIRECT TRAINING

Sec.
5.1 Establishment of fees.
5.2 Definitions.
5.3 Schedule of fees.
5.4 Registration offices.
5.5 Procedure for payment.
5.6 Refunds.
5.7 Waiver of fee.
5.8 Appeal of waiver denial.

AUTHORITY: Title V, 65 Stat. 290 (31 U.S.C. 483a).

SOURCE: 38 FR 32806, Nov. 28, 1973, unless otherwise noted.

§5.1 Establishment of fees.

The Environmental Protection Agency shall charge the revised schedule of tuition fees for all persons attending EPA direct training courses which commence on or after January 1, 1974.

§5.2 Definitions.

Direct Training means all technical and managerial training conducted directly by EPA for personnel of State and local governmental agencies, other Federal agencies, private industries, universities, and other non-EPA agencies and organizations.

Registration office means any of the several offices in EPA which have been designated to receive applications for attendance at direct training courses. (See §5.4 for a listing of such courses.)

§5.3 Schedule of fees.

Tuition fees for direct training will be established within the range of $15 to $70 per training day depending upon whether the course is predominantly a laboratory, lecture, or survey course, or a course with other similar variables. Each cognitive program and regional office will announce the tuition fee at the time the date for offering the course is announced. As a transition easement, tuition fees for all State and

local government employees are established at a maximum of $25 per training day regardless of type of course until July 1, 1974. After that date they are to pay the full fee. Charges for field courses taught by EPA instructors are for actual expenses on a per course basis. Complete tuition fee schedules may be obtained from the registration offices listed in § 5.4. Tuition fees will be subject to change either upward or downward, based on actual experience under the system.

§ 5.4 Registration offices.

Direct training programs are offered by both EPA national program offices and regional EPA offices. Listed in this section are the EPA national program offices and regional offices to which applications are to be sent. The proper registration office may be determined from the specific course announcement.

NATIONAL PROGRAM OFFICES

AIR PROGRAM

Direct Training Registration Office, Office of Air Programs, Research Triangle Park, NC 27717.

WASTE WATER TREATMENT PROGRAM

Direct Training Registration Office, National Training Center, Robert A. Taft Sanitary Engineering Center, Environmental Protection Agency, 4676 Columbia Parkway, Cincinnati, OH 45226.

WATER SUPPLY TREATMENT PROGRAM

Direct Training Registration Office, Environmental Protection Agency, 4676 Columbia Parkway, Cincinnati, OH 45226.

SOLID WASTES MANAGEMENT PROGRAM

U.S. Environmental Protection Agency, Office of Solid Waste Management Programs, Washington, DC 20460.

RADIATION PROGRAM

U.S. Environmental Protection Agency, Office of Radiation Programs, Washington, DC 20460.

PESTICIDES PROGRAM

U.S. Environmental Protection Agency, Office of Pesticides Programs, Washington, DC 20460.

REGIONAL EPA OFFICES

EPA, Regional Manpower Office, Region I, JFK Federal Building—Room 2303, Boston, MA 02203.

EPA, Regional Manpower Office, Region II, 26 Federal Plaza, Room 845D, New York, NY 10007.

EPA, Regional Manpower Office, Region III, Sixth and Walnut Streets, Philadelphia, PA 19106

EPA, Regional Manpower Office, Region IV, 1421 Peachtree Street, NE., 4th floor, Atlanta, GA 30309.

EPA, Regional Manpower Office, Region V, 1 North Wacker Drive, Chicago, IL 60606.

EPA, Regional Manpower Office, Region VI, 1600 Patterson, Suite 1100, Dallas, TX 75201.

EPA, Regional Manpower Office, Region VII, Room 249, 1735 Baltimore Avenue, Kansas City, MO 64108.

EPA, Regional Manpower Office, Region VIII, Suite 900, 1860 Lincoln Street, Denver, CO 80203.

EPA, Regional Manpower Office, Region IX, 100 California Street, San Francisco, CA 94111.

EPA, Regional Manpower Office, Region X, 1200 Sixth Avenue, Seattle, WA 98101.

§ 5.5 Procedure for payment.

Applications for direct training courses shall be completed and submitted in accordance with the instructions issued by the respective national program and/or regional offices. Fee payment in the amount indicated by the course announcement shall accompany completed applications (except in the case of waiver requests as described in § 5.75). All applications for field courses will be submitted in a timely manner by the sponsoring agency. Expenses will be noted and charges assessed the sponsoring agency after the course is conducted. The charge will be payable upon submission. All applicants shall make payment by check, payable to the U.S. Environmental Protection Agency, except applicants from Federal, State, and local agencies may send a purchase order of other acceptable financial commitment. Such financial commitment statements shall include information as to the agency and account number to be charged and other necessary information for billing purposes.

§ 5.6 Refunds.

An applicant may withdraw his application and receive full reimbursement

of his fee provided that he notifies the appropriate registration office in writing no later than 10 days before commencement of the course for which he has registered.

§ 5.7 Waiver of fee.

Waivers of the full tuition fee may be granted on a limited basis. Each waiver request must be justified and considered by cognitive EPA units on: (a) Severity of the pollution problem in the area in which the applicant employee is working; (b) bona-fide administrative or legal constraints of the applicant agency to pay the reduced fee; (c) service, resulting from the training that will be provided as a benefit to the Federal Government. No waivers will be granted for field courses. Waivers are provided as a transitional easement for exceptional cases and will not be granted after July 1, 1975.

§ 5.8 Appeal of waiver denial.

Waiver denials may be appealed to the Office of Education and Manpower Planning, Washington, DC 20460, to adjudicate and expedite agency review. Appeal submissions should include copies of original application and justification for waiver, EPA registration office denial correspondence, and other pertinent information supporting the request for waiver.

PART 6—PROCEDURES FOR IMPLEMENTING THE REQUIREMENTS OF THE COUNCIL ON ENVIRONMENTAL QUALITY ON THE NATIONAL ENVIRONMENTAL POLICY ACT

Subpart A—General

Sec.
6.100 Purpose and policy.
6.101 Definitions.
6.102 Applicability.
6.103 Responsibilities.
6.104 Early involvement of private parties.
6.105 Synopsis of environmental review procedures.
6.106 Deviations.
6.107 Categorical exclusions.
6.108 Criteria for initiating an EIS.

Subpart B—Content of EISs

6.200 The environmental impact statement.
6.201 Format.
6.202 Executive summary.
6.203 Body of EISs.
6.204 Incorporation by reference.
6.205 List of preparers.

Subpart C—Coordination With Other Environmental Review and Consultation Requirements

6.300 General.
6.301 Landmarks, historical, and archeological sites.
6.302 Wetlands, floodplains, important farmlands, coastal zones, wild and scenic rivers, fish and wildlife, and endangered species.
6.303 Air quality.

Subpart D—Public and Other Federal Agency Involvement

6.400 Public involvement.
6.401 Official filing requirements.
6.402 Availability of documents.
6.403 The commenting process.
6.404 Supplements.

Subpart E—Environmental Review Procedures for Wastewater Treatment Construction Grants Program

6.500 Purpose.
6.501 Definitions.
6.502 Applicability and limitations.
6.503 Overview of the environmental review process.
6.504 Consultation during the facilities planning process.
6.505 Categorical exclusions.
6.506 Environmental review process.
6.507 Partitioning the environmental review process.
6.508 Findings of No Significant Impact (FNSI) determination.
6.509 Criteria for initiating Environmental Impact Statements (EIS).
6.510 Environmental Impact Statement (EIS) preparation.
6.511 Record of Decision (ROD) for EISs and identification of mitigation measures.
6.512 Monitoring for compliance.
6.513 Public participation.
6.514 Delegation to States.

Subpart F—Environmental Review Procedures for the New Source NPDES Program

6.600 Purpose.
6.601 Definitions.
6.602 Applicability.
6.603 Limitations on actions during environmental review process.
6.604 Environmental review process.
6.605 Criteria for preparing EISs.
6.606 Record of decision.
6.607 Monitoring.

Subpart G—Environmental Review Procedures for Office of Research and Development Projects

6.700 Purpose.
6.701 Definition.
6.702 Applicability.
6.703 General.
6.704 Categorical exclusions.
6.705 Environmental assessment and finding of no significant impact.
6.706 Environmental impact statement.

Subpart H—Environmental Review Procedures for Solid Waste Demonstration Projects

6.800 Purpose.
6.801 Applicability.
6.802 Criteria for preparing EISs.
6.803 Environmental review process.
6.804 Record of decision.

Subpart I—Environmental Review Procedures for EPA Facility Support Activities

6.900 Purpose.
6.901 Definitions.
6.902 Applicability.
6.903 Criteria for preparing EISs.
6.904 Environmental review process.
6.905 Record of decision.

Subpart J—Assessing the Environmental Effects Abroad of EPA Actions

6.1001 Purpose and policy.
6.1002 Applicability.
6.1003 Definitions.
6.1004 Environmental review and assessment requirements.
6.1005 Lead or cooperating agency.
6.1006 Exemptions and considerations.
6.1007 Implementation.

APPENDIX A TO PART 6—STATEMENT OF PROCEDURES ON FLOODPLAIN MANAGEMENT AND WETLANDS PROTECTION

AUTHORITY: 42 U.S.C. 4321 *et seq.*, 7401-7671q; 40 CFR part 1500.

SOURCE: 44 FR 64177, Nov. 6, 1979, unless otherwise noted.

Subpart A—General

§ 6.100 Purpose and policy.

(a) The National Environmental Policy Act of 1969 (NEPA), 42 U.S.C. 4321 *et seq.*, as implemented by Executive Orders 11514 and 11991 and the Council on Environmental Quality (CEQ) Regulations of November 29, 1978 (43 FR 55978) requires that Federal agencies include in their decision-making processes appropriate and careful consideration of all environmental effects of proposed actions, analyze potential environmental effects of proposed actions and their alternatives for public understanding and scrutiny, avoid or minimize adverse effects of proposed actions, and restore and enhance environmental quality as much as possible. The Environmental Protection Agency (EPA) shall integrate these NEPA factors as early in the Agency planning processes as possible. The environmental review process shall be the focal point to assure NEPA considerations are taken into account. To the extent applicable, EPA shall prepare environmental impact statements (EISs) on those major actions determined to have significant impact on the quality of the human environment. This part takes into account the EIS exemptions set forth under section 511(c)(1) of the Clean Water Act (Pub. L. 92–500) and section 7(c)(1) of the Energy Supply and Environmental Coordination Act of 1974 (Pub. L. 93–319).

(b) This part establishes EPA policy and procedures for the identification and analysis of the environmental impacts of EPA-related activities and the preparation and processing of EISs.

§ 6.101 Definitions.

(a) *Terminology*. All terminology used in this part will be consistent with the terms as defined in 40 CFR part 1508 (the CEQ Regulations). Any qualifications will be provided in the definitions set forth in each subpart of this regulation.

(b) The term *CEQ Regulations* means the regulations issued by the Council on Environmental Quality on November 29, 1978 (see 43 FR 55978), which implement Executive Order 11991. The CEQ Regulations will often be referred to throughout this regulation by reference to 40 CFR part 1500 *et al.*

(c) The term *environmental review* means the process whereby an evaluation is undertaken by EPA to determine whether a proposed Agency action may have a significant impact on the environment and therefore require the preparation of the EIS.

(d) The term *environmental information document* means any written analysis prepared by an applicant, grantee or

contractor describing the environmental impacts of a proposed action. This document will be of sufficient scope to enable the responsible official to prepare an environmental assessment as described in the remaining subparts of this regulation.

(e) The term *grant* as used in this part means an award of funds or other assistance by a written grant agreement or cooperative agreement under 40 CFR chapter I, subpart B.

§6.102 Applicability.

(a) *Administrative actions covered.* This part applies to the activities of EPA in accordance with the outline of the subparts set forth below. Each subpart describes the detailed environmental review procedures required for each action.

(1) Subpart A sets forth an overview of the regulation. Section 6.102(b) describes the requirements for EPA legislative proposals.

(2) Subpart B describes the requirements for the content of an EIS prepared pursuant to subparts E, F, G, H, and I.

(3) Subpart C describes the requirements for coordination of all environmental laws during the environmental review undertaken pursuant to subparts E, F, G, H, and I.

(4) Subpart D describes the public information requirements which must be undertaken in conjunction with the environmental review requirements under subparts E, F, G, H, and I.

(5) Subpart E describes the environmental review requirements for the wastewater treatment construction grants program under Title II of the Clean Water Act.

(6) Subpart F describes the environmental review requirements for new source National Pollutant Discharge Elimination System (NPDES) permits under section 402 of the Clean Water Act.

(7) Subpart G describes the environmental review requirements for research and development programs undertaken by the Agency.

(8) Subpart H describes the environmental review requirements for solid waste demonstration projects undertaken by the Agency.

(9) Subpart I describes the environmental review requirements for construction of special purpose facilities and facility renovations by the Agency.

(b) *Legislative proposals.* As required by the CEQ Regulations, legislative EISs are required for any legislative proposal developed by EPA which significantly affects the quality of the human environment. A preliminary draft EIS shall be prepared by the responsible EPA office concurrently with the development of the legislative proposal and contain information required under subpart B. The EIS shall be processed in accordance with the requirements set forth under 40 CFR 1506.8.

(c) *Application to ongoing activities*—(1) *General.* The effective date for these regulations is December 5, 1979. These regulations do not apply to an EIS or supplement to that EIS if the draft EIS was filed with the Office of External Affairs, (OEA) before July 30, 1979. No completed environmental documents need be redone by reason of these regulations.

(2) With regard to activities under subpart E, these regulations shall apply to all EPA environmental review procedures effective December 15, 1979. However, for facility plans begun before December 15, 1979, the responsible official shall impose no new requirements on the grantee. Such grantees shall comply with requirements applicable before the effective date of this regulation. Notwithstanding the above, this regulation shall apply to any facility plan submitted to EPA after September 30, 1980.

[44 FR 64177, Nov. 6, 1979, as amended at 47 FR 9829, Mar. 8, 1982]

§6.103 Responsibilities.

(a) *General responsibilities.* (1) The responsible official's duties include:

(i) Requiring applicants, contractors, and grantees to submit environmental information documents and related documents and assuring that environmental reviews are conducted on proposed EPA projects at the earliest possible point in EPA's decision-making process. In this regard, the responsible official shall assure the early involvement and availability of information for private applicants and other non-

Federal entities requiring EPA approvals.

(ii) When required, assuring that adequate draft EISs are prepared and distributed at the earliest possible point in EPA's decision-making process, their internal and external review is coordinated, and final EISs are prepared and distributed.

(iii) When an EIS is not prepared, assuring documentation of the decision to grant a categorical exclusion, or assuring that findings of no significant impact (FNSIs) and environmental assessments are prepared and distributed for those actions requiring them.

(iv) Consulting with appropriate officials responsible for other environmental laws set forth in subpart C.

(v) Consulting with the Office of External Affairs (OEA) on actions involving unresolved conflicts concerning this part or other Federal agencies.

(vi) When required, assuring that public participation requirements are met.

(2) *Office of External Affairs duties include:* (i) Supporting the Administrator in providing EPA policy guidance and assuring that EPA offices establish and maintain adequate administrative procedures to comply with this part.

(ii) Monitoring the overall timeliness and quality of the EPA effort to comply with this part.

(iii) Providing assistance to responsible officials as required, i.e., preparing guidelines describing the scope of environmental information required by private applicants relating to their proposed actions.

(iv) Coordinating the training of personnel involved in the review and preparation of EISs and other associated documents.

(v) Acting as EPA liaison with the Council on Environmental Quality and other Federal and State entities on matters of EPA policy and administrative mechanisms to facilitate external review of EISs, to determine lead agency and to improve the uniformity of the NEPA procedures of Federal agencies.

(vi) Advising the Administrator and Deputy Administrator on projects which involve more than one EPA office, are highly controversial, are nationally significant, or *pioneer* EPA policy, when these projects have had or should have an EIS prepared on them.

(vii) Carrying out administrative duties relating to maintaining status of EISs within EPA, i.e., publication of notices of intent in the FEDERAL REGISTER and making available to the public status reports on EISs and other elements of the environmental review process.

(3) *Office of an Assistant Administrator duties include:* (i) Providing specific policy guidance to their respective offices and assuring that those offices establish and maintain adequate administrative procedures to comply with this part.

(ii) Monitoring the overall timeliness and quality of their respective office's efforts to comply with this part.

(iii) Acting as liaison between their offices and the OEA and between their offices and other Assistant Administrators or Regional Administrators on matters of agencywide policy and procedures.

(iv) Advising the Administrator and Deputy Administrator through the OEA on projects or activities within their respective areas of responsibilities which involve more than one EPA office, are highly controversial, are nationally significant, or *pioneer* EPA policy, when these projects will have or should have an EIS prepared on them.

(v) Pursuant to § 6.102(b) of this subpart, preparing legislative EISs as appropriate on EPA legislative initiatives.

(4) The Office of Policy, Planning, and Evaluation duties include: responsibilities for coordinating the preparation of EISs required on EPA legislative proposals in accordance with § 6.102(b).

(b) *Responsibilities for subpart E*—(1) *Responsible official.* The responsible official for EPA actions covered by this subpart is the Regional Administrator.

(2) *Assistant Administrator.* The responsibilities of the Assistant Administrator, as described in § 6.103(a)(3), shall be assumed by the Assistant Administrator for Water for EPA actions covered by this subpart.

(c) *Responsibilities for subpart F*—(1) *Responsible official.* The responsible official for activities covered by this subpart is the Regional Administrator.

(2) *Assistant Administrator.* The responsibilities of the Assistant Administrator, as described in §6.103(a)(3), shall be assumed by the Assistant Administrator for Enforcement and Compliance Monitoring for EPA actions covered by this subpart.

(d) *Responsibilities for subpart G.* The Assistant Administrator for Research and Development will be the responsible official for activities covered by this subpart.

(e) *Responsibilities for subpart H.* The Assistant Administrator for Solid Waste and Emergency Response will be the responsible official for activities covered by this subpart.

(f) *Responsibilities for subpart I.* The responsible official for new construction and modification of special purpose facilities is as follows:

(1) The Chief, Facilities Engineering and Real Estate Branch, Facilities and Support Services Division, Office of the Assistant Administrator for Administration and Resource Management (OARM) shall be the responsible official on all new construction of special purpose facilities and on all new modification projects for which the Facilities Engineering and Real Estate Branch has received a funding allowance and for all other field components not covered elsewhere in paragraph (f) of this section.

(2) The Regional Administrator shall be the responsible official on all improvement and modification projects for which the regional office has received the funding allowance.

[44 FR 64177, Nov. 6, 1979, as amended at 47 FR 9829, Mar. 8, 1982; 50 FR 26315, June 25, 1985; 51 FR 32609, Sept. 12, 1986]

§6.104 Early involvement of private parties.

As required by 40 CFR 1501.2(d) and §6.103(a)(3)(v) of this regulation, responsible officials must ensure early involvement of private applicants or other non-Federal entities in the environmental review process related to EPA grant and permit actions set forth under subparts E, F, G, and H. The responsible official in conjunction with OEA shall:

(a) Prepare where practicable, generic guidelines describing the scope and level of environmental information required from applicants as a basis for evaluating their proposed actions, and make these guidelines available upon request.

(b) Provide such guidance on a project-by-project basis to any applicant seeking assistance.

(c) Upon receipt of an application for agency approval, or notification that an application will be filed, consult as required with other appropriate parties to initiate and coordinate the necessary environmental analyses.

[44 FR 64177, Nov. 6, 1979, as amended at 47 FR 9829, Mar. 8, 1982]

§6.105 Synopsis of environmental review procedures.

(a) *Responsible official.* The responsible official shall utilize a systematic, interdisciplinary approach to integrate natural and social sciences as well as environmental design arts in planning programs and making decisions which are subject to environmental review. The respective staffs may be supplemented by professionals from other agencies (see 40 CFR 1501.6) or consultants whenever in-house capabilities are insufficiently interdisciplinary.

(b) *Environmental information documents (EID).* Environmental information documents (EIDs) must be prepared by applicants, grantees, or permittees and submitted to EPA as required in subparts E, F, G, H, and I. EIDs will be of sufficient scope to enable the responsible official to prepare an environmental assessment as described under §6.105(d) of this part and subparts E through I. EIDs will not have to be prepared for actions where a categorical exclusion has been granted.

(c) *Environmental reviews.* Environmental reviews shall be conducted on the EPA activities outlined in §6.102 of this part and set forth under subparts E, F, G, H and I. This process shall consist of a study of the action to identify and evaluate the related environmental impacts. The process shall include a review of any related environmental information document to determine whether any significant impacts are anticipated and whether any changes can be made in the proposed action to eliminate significant adverse impacts;

when an EIS is required, EPA has overall responsibility for this review, although grantees, applicants, permittees or contractors will contribute to the review through submission of environmental information documents.

(d) *Environmental assessments.* Environmental assessments (i.e., concise public documents for which EPA is responsible) are prepared to provide sufficient data and analysis to determine whether an EIS or finding of no significant impact is required. Where EPA determines that a categorical exclusion is appropriate or an EIS will be prepared, there is no need to prepare a formal environmental assessment.

(e) *Notice of intent and EISs.* When the environmental review indicates that a significant environmental impact may occur and significant adverse impacts can not be eliminated by making changes in the project, a notice of intent to prepare an EIS shall be published in the FEDERAL REGISTER, scoping shall be undertaken in accordance with 40 CFR 1501.7, and a draft EIS shall be prepared and distributed. After external coordination and evaluation of the comments received, a final EIS shall be prepared and disseminated. The final EIS shall list any mitigation measures necessary to make the recommended alternative environmentally acceptable.

(f) *Finding of no significant impact* (FNSI). When the environmental review indicates no significant impacts are anticipated or when the project is altered to eliminate any significant adverse impacts, a FNSI shall be issued and made available to the public. The environmental assessment shall be included as a part of the FNSI. The FNSI shall list any mitigation measures necessary to make the recommended alternative environmentally acceptable.

(g) *Record of decision.* At the time of its decision on any action for which a final EIS has been prepared, the responsible official shall prepare a concise public record of the decision. The record of decision shall describe those mitigation measures to be undertaken which will make the selected alternative environmentally acceptable. Where the final EIS recommends the alternative which is ultimately chosen by the responsible official, the record of decision may be extracted from the executive summary to the final EIS.

(h) *Monitoring.* The responsible official shall provide for monitoring to assure that decisions on any action where a final EIS has been prepared are properly implemented. Appropriate mitigation measures shall be included in actions undertaken by EPA.

[44 FR 64177, Nov. 6, 1979, as amended at 50 FR 26315, June 25, 1985; 51 FR 32610, Sept. 12, 1986]

§ 6.106 Deviations.

(a) *General.* The Assistant Administrator, OEA, is authorized to approve deviations from these regulations. Deviation approvals shall be made in writing by the Assistant Administrator, OEA.

(b) *Requirements.* (1) Where emergency circumstances make it necessary to take an action with significant environmental impact without observing the substantive provisions of these regulations or the CEQ Regulations, the responsible official shall notify the Assistant Administrator, OEA, before taking such action. The responsible official shall consider to the extent possible alternative arrangements; such arrangements will be limited to actions necessary to control the immediate impacts of the emergency; other actions remain subject to the environmental review process. The Assistant Administrator, OEA, after consulting CEQ, will inform the responsible official, as expeditiously as possible of the disposition of his request.

(2) Where circumstances make it necessary to take action without observing procedural provisions of these regulations, the responsible official shall notify the Assistant Administrator, OEA, before taking such action. If the Assistant Administrator, OEA, determines such a deviation would be in the best interest of the Government, he shall inform the responsible official, as soon as possible, of his approval.

(3) The Assistant Administrator, OEA, shall coordinate his action on a deviation under § 6.106(b)(1) or (2) of this part with the Director, Grants Administration Division, Office of Planning and Management, for any required grant-related deviation under 40 CFR

30.1000, as well as the appropriate Assistant Administrator.

[44 FR 64177, Nov. 6, 1979, as amended at 47 FR 9829, Mar. 8, 1982]

§6.107 Categorical exclusions.

(a) *General.* Categories of actions which do not individually, cumulatively over time, or in conjunction with other Federal, State, local, or private actions have a significant effect on the quality of the human environment and which have been identified as having no such effect based on the requirements in §6.505, may be exempted from the substantive environmental review requirements of this part. Environmental information documents and environmental assessments or environmental impact statements will not be required for excluded actions.

(b) *Determination.* The responsible official shall determine whether an action is eligible for a categorical exclusion as established by general criteria in §6.107 (d) and (e) and any applicable criteria in program specific subparts of part 6 of this title. A determination shall be made as early as possible following the receipt of an application. The responsible official shall document the decision to issue or deny an exclusion as soon as practicable following review in accordance with §6.400(f). For qualified actions, the documentation shall include the application, a brief description of the proposed action, and a brief statement of how the action meets the criteria for a categorical exclusion without violating criteria for not granting an exclusion.

(c) *Revocation.* The responsible official shall revoke a categorical exclusion and shall require a full environmental review if, subsequent to the granting of an exclusion, the responsible official determines that: (1) The proposed action no longer meets the requirements for a categorical exclusion due to changes in the proposed action; or (2) determines from new evidence that serious local or environmental issues exist; or (3) that Federal, State, local, or tribal laws are being or may be violated.

(d) *General categories of actions eligible for exclusion.* Actions consistent with any of the following categories are eligible for a categorical exclusion:

(1) Actions which are solely directed toward minor rehabilitation of existing facilities, functional replacement of equipment, or towards the construction of new ancillary facilities adjacent or appurtenant to existing facilities;

(2) Other actions specifically allowed in program specific subparts of this regulation; or

(3) Other actions developed in accordance with paragraph (f) of this section.

(e) *General criteria for not granting a categorical exclusion.* (1) The full environmental review procedures of this part must be followed if undertaking an action consistent with allowable categories in paragraph (d) of this section may involve serious local or environmental issues, or meets any of the criteria listed below:

(i) The action is known or expected to have a significant effect on the quality of the human environment, either individually, cumulatively over time, or in conjunction with other federal, State, local, tribal or private actions;

(ii) The action is known or expected to directly or indirectly affect:

(A) Cultural resource areas such as archaeological and historic sites in accordance with §6.301,

(B) Endangered or threatened species and their critical habitats in accordance with §6.302 or State lists,

(C) Environmentally important natural resource areas such as floodplains, wetlands, important farmlands, aquifer recharge zones in accordance with §6.302, or

(D) Other resource areas identified in supplemental guidance issued by the OEA;

(iii) The action is known or expected not to be cost-effective or to cause significant public controversy; or

(iv) Appropriate specialized program specific criteria for not granting an exclusion found in other subparts of this regulation are applicable to the action.

(2) Notwithstanding the provisions of paragraph (d) of this section, if any of the conditions cited in paragraph (e)(1) of this section exist, the responsible official shall ensure:

(i) That a categorical exclusion is not granted or, if previously granted, that it is revoked according to paragraph (c) of this section;

(ii) That an adequate EID is prepared; and

(iii) That either an environmental assessment and FNSI or a notice of intent for an EIS and ROD is prepared and issued.

(f) *Developing new categories of excluded actions.* The responsible official, or other interested parties, may request that a new general or specialized program specific category of excluded actions be created, or that an existing category be amended or deleted. The request shall be in writing to the Assistant Administrator, OEA, and shall contain adequate information to support the request. Proposed new categories shall be developed by OEA and published in the FEDERAL REGISTER as a proposed rule, amending paragraph (d) of this section when the proposed new category applies to all eligible programs or, amending appropriate paragraphs in other subparts of this part when the proposed new category applies to one specific program. The publication shall include a thirty (30) day public comment period. In addition to criteria for specific programs listed in other subparts of this part, the following general criteria shall be considered in evaluating proposals for new categories:

(1) Any action taken seldom results in the effects identified in general or specialized program specific criteria identified through the application of criteria for not granting a categorical exclusion;

(2) Based upon previous environmental reviews, actions consistent with the proposed category have not required the preparation of an EIS; and

(3) Whether information adequate to determine if a potential action is consistent with the proposed category will normally be available when needed.

[50 FR 26315, June 25, 1985, as amended at 51 FR 32610, Sept. 12, 1986]

§ 6.108 Criteria for initiating an EIS.

The responsible official shall assure that an EIS will be prepared and issued for actions under subparts E, G, H, and I when it is determined that any of the following conditions exist:

(a) The Federal action may significantly affect the pattern and type of land use (industrial, commercial, agricultural, recreational, residential) or growth and distribution of population;

(b) The effects resulting from any structure or facility constructed or operated under the proposed action may conflict with local, regional or State land use plans or policies;

(c) The proposed action may have significant adverse effects on wetlands, including indirect and cumulative effects, or any major part of a structure or facility constructed or operated under the proposed action may be located in wetlands;

(d) The proposed action may significantly affect threatened and endangered species or their habitats identified in the Department of the Interior's list, in accordance with § 6.302, or a State's list, or a structure or a facility constructed or operated under the proposed action may be located in the habitat;

(e) Implementation of the proposed action or plan may directly cause or induce changes that significantly:

(1) Displace population;

(2) Alter the character of existing residential areas;

(3) Adversely affect a floodplain; or

(4) Adversely affect significant amounts of important farmlands as defined in requirements in § 6.302(c), or agricultural operations on this land.

(f) The proposed action may, directly, indirectly or cumulatively have significant adverse effect on parklands, preserves, other public lands or areas of recognized scenic, recreational, archaeological, or historic value; or

(g) The Federal action may directly or through induced development have a significant adverse effect upon local ambient air quality, local ambient noise levels, surface water or groundwater quality or quantity, water supply, fish, shellfish, wildlife, and their natural habitats.

[50 FR 26315, June 25, 1985, as amended at 51 FR 32611, Sept. 12, 1986]

Subpart B—Content of EISs

§ 6.200 The environmental impact statement.

Preparers of EISs must conform with the requirements of 40 CFR part 1502 in writing EISs.

§6.201 Format.

The format used for EISs shall encourage good analysis and clear presentation of alternatives, including the proposed action, and their environmental, economic and social impacts. The following standard format for EISs should be used unless the responsible official determines that there is a compelling reason to do otherwise:

(a) Cover sheet;

(b) Executive Summary;

(c) Table of contents;

(d) Purpose of and need for action;

(e) Alternatives including proposed action;

(f) Affected environment;

(g) Environmental consequences of the alternatives;

(h) Coordination (includes list of agencies, organizations, and persons to whom copies of the EIS are sent);

(i) List of preparers;

(j) Index (commensurate with complexity of EIS);

(k) Appendices.

§6.202 Executive summary.

The executive summary shall describe in sufficient detail (10–15 pages) the critical facets of the EIS so that the reader can become familiar with the proposed project or action and its net effects. The executive summary shall focus on:

(a) The existing problem;

(b) A brief description of each alternative evaluated (including the preferred and no action alternatives) along with a listing of the environmental impacts, possible mitigation measures relating to each alternative, and any areas of controversy (including issues raised by governmental agencies and the public); and

(c) Any major conclusions.

A comprehensive summary may be prepared in instances where the EIS is unusually long in nature. In accordance with 40 CFR 1502.19, the comprehensive summary may be circulated in lieu of the EIS; however, both documents shall be distributed to any Federal, State and local agencies who have EIS review responsibilities and also shall be made available to other interested parties upon request.

§6.203 Body of EISs.

(a) *Purpose and need.* The EIS shall clearly specify the underlying purpose and need to which EPA is responding. If the action is a request for a permit or a grant, the EIS shall clearly specify the goals and objectives of the applicant.

(b) *Alternatives including the proposed action.* In addition to 40 CFR 1502.14, the EIS shall discuss:

(1) *Alternatives considered by the applicant.* This section shall include a *balanced* description of each alternative considered by the applicant. These discussions shall include size and location of facilities, land requirements, operation and maintenance requirements, auxiliary structures such as pipelines or transmission lines, and construction schedules. The alternative of no action shall be discussed and the applicant's preferred alternative(s) shall be identified. For alternatives which were eliminated from detailed study, a brief discussion of the reasons for their having been eliminated shall be included.

(2) *Alternatives available to EPA.* EPA alternatives to be discussed shall include: (i) Taking an action; or (ii) taking an action on a modified or alternative project, including an action not considered by the applicant; and (iii) denying the action.

(3) *Alternatives available to other permitting agencies.* When preparing a joint EIS, and if applicable, the alternatives available to other Federal and/or State agencies shall be discussed.

(4) *Identifying preferred alternative.* In the final EIS, the responsible official shall signify the preferred alternative.

(c) *Affected environment and environmental consequences of the alternatives.* The affected environment on which the evaluation of each alternative shall be based includes, for example, hydrology, geology, air quality, noise, biology, socioeconomics, energy, land use, and archeology and historic subjects. The discussion shall be structured so as to present the total impacts of each alternative for easy comparison among all alternatives by the reader. The effects of a ''no action'' alternative should be included to facilitate reader comparison of the beneficial and adverse impacts of other alternatives to the applicant doing nothing. A description of

the environmental setting shall be included in the ''no action'' alternative for the purpose of providing needed background information. The amount of detail in describing the affected environment shall be commensurate with the complexity of the situation and the importance of the anticipated impacts.

(d) *Coordination.* The EIS shall include:

(1) The objections and suggestions made by local, State, and Federal agencies before and during the EIS review process must be given full consideration, along with the issues of public concern expressed by individual citizens and interested environmental groups. The EIS must include discussions of any such comments concerning our actions, and the author of each comment should be identified. If a comment has resulted in a change in the project or the EIS, the impact statement should explain the reason.

(2) Public participation through public hearings or scoping meetings shall also be included. If a public hearing has been held prior to the publication of the EIS, a summary of the transcript should be included in this section. For the public hearing which shall be held after the publication of the draft EIS, the date, time, place, and purpose shall be included here.

(3) In the final EIS, a summary of the coordination process and EPA responses to comments on the draft EIS shall be included.

[44 FR 64177, Nov. 6, 1979, as amended at 50 FR 26316, June 25, 1985]

§ 6.204 Incorporation by reference.

In addition to 40 CFR 1502.21, material incorporated into an EIS by reference shall be organized to the extent possible into a Supplemental Information Document and be made available for review upon request. No material may be incorporated by reference unless it is reasonably available for inspection by potentially interested persons within the period allowed for comment.

§ 6.205 List of preparers.

When the EIS is prepared by contract, either under direct contract to EPA or through an applicant's or grantee's contractor, the responsible official must independently evaluate the EIS prior to its approval and take responsibility for its scope and contents. The EPA officials who undertake this evaluation shall also be described under the list of preparers.

Subpart C—Coordination With Other Environmental Review and Consultation Requirements

§ 6.300 General.

Various Federal laws and executive orders address specific environmental concerns. The responsible official shall integrate to the greatest practicable extent the applicable procedures in this subpart during the implementation of the environmental review process under Subparts E through I. This subpart presents the central requirements of these laws and executive orders. It refers to the pertinent authority and regulations or guidance that contain the procedures. These laws and executive orders establish review procedures independent of NEPA requirements. The responsible official shall be familiar with any other EPA or appropriate agency procedures implementing these laws and executive orders.

[44 FR 64177, Nov. 6, 1979, as amended at 50 FR 26316, June 25, 1985]

§ 6.301 Landmarks, historical, and archeological sites.

EPA is subject to the requirements of the Historic Sites Act of 1935, 16 U.S.C. 461 *et seq.*, the National Historic Preservation Act of 1966, as amended, 16 U.S.C. 470 *et seq.*, the Archaeological and Historic Preservation Act of 1974, 16 U.S.C. 469 *et seq.*, and Executive Order 11593, entitled ''Protection and Enhancement of the Cultural Environment.'' These statutes, regulations and executive orders establish review procedures independent of NEPA requirements.

(a) *National natural landmarks.* Under the Historic Sites Act of 1935, the Secretary of the Interior is authorized to designate areas as national natural landmarks for listing on the National Registry of Natural Landmarks. In conducting an environmental review of a proposed EPA action, the responsible

official shall consider the existence and location of natural landmarks using information provided by the National Park Service pursuant to 36 CFR 62.6(d) to avoid undesirable impacts upon such landmarks.

(b) *Historic, architectural, archeological, and cultural sites.* Under section 106 of the National Historic Preservation Act and Executive Order 11593, if an EPA undertaking affects any property with historic, architectural, archeological or cultural value that is listed on or eligible for listing on the National Register of Historic Places, the responsible official shall comply with the procedures for consultation and comment promulgated by the Advisory Council on Historic Preservation in 36 CFR part 800. The responsible official must identify properties affected by the undertaking that are potentially eligible for listing on the National Register and shall request a determination of eligibility from the Keeper of the National Register, Department of the Interior, under the procedures in 36 CFR part 63.

(c) *Historic, prehistoric and archeological data.* Under the Archeological and Historic Preservation Act, if an EPA activity may cause irreparable loss or destruction of significant scientific, prehistoric, historic or archeological data, the responsible official or the Secretary of the Interior is authorized to undertake data recovery and preservation activities. Data recovery and preservation activities shall be conducted in accordance with implementing procedures promulgated by the Secretary of the Interior. The National Park Service has published technical standards and guidelines regarding archeological preservation activities and methods at 48 FR 44716 (September 29, 1983).

[44 FR 64177, Nov. 6, 1979, as amended at 50 FR 26316, June 25, 1985]

§6.302 Wetlands, floodplains, important farmlands, coastal zones, wild and scenic rivers, fish and wildlife, and endangered species.

The following procedures shall apply to EPA administrative actions in programs to which the pertinent statute or executive order applies.

(a) *Wetlands protection.* Executive Order 11990, Protection of Wetlands, requires Federal agencies conducting certain activities to avoid, to the extent possible, the adverse impacts associated with the destruction or loss of wetlands and to avoid support of new construction in wetlands if a practicable alternative exists. EPA's Statement of Procedures on Floodplain Management and Wetlands Protection (dated January 5, 1979, incorporated as appendix A hereto) requires EPA programs to determine if proposed actions will be in or will affect wetlands. If so, the responsible official shall prepare a floodplains/wetlands assessment, which will be part of the environmental assessment or environmental impact statement. The responsible official shall either avoid adverse impacts or minimize them if no practicable alternative to the action exists.

(b) *Floodplain management.* Executive Order 11988, Floodplain Management, requires Federal agencies to evaluate the potential effects of actions they may take in a floodplain to avoid, to the extent possible, adverse effects associated with direct and indirect development of a floodplain. EPA's Statement of Procedures on Floodplain Management and Wetlands Protection (dated January 5, 1979, incorporated as appendix A hereto), requires EPA programs to determine whether an action will be located in or will affect a floodplain. If so, the responsible official shall prepare a floodplain/wetlands assessment. The assessment will become part of the environmental assessment or environmental impact statement. The responsible official shall either avoid adverse impacts or minimize them if no practicable alternative exists.

(c) *Important farmlands.* It is EPA's policy as stated in the EPA Policy To Protect Environmentally Significant Agricultural Lands, dated September 8, 1978, to consider the protection of the Nation's significant/important agricultural lands from irreversible conversion to uses which result in its loss as an environmental or essential food production resource. In addition the Farmland Protection Policy Act, (FPPA) 7 U.S.C. 4201 *et seq.*, requires federal agencies to use criteria developed by the Soil Conservation Service, U.S. Department of Agriculture, to:

(1) Identify and take into account the adverse effects of their programs on the preservation of farmlands from conversion to other uses;

(2) Consider alternative actions, as appropriate, that could lessen such adverse impacts; and

(3) Assure that their programs, to the extent possible, are compatible with State and local government and private programs and policies to protect farmlands. If an EPA action may adversely impact farmlands which are classified prime, unique or of State and local importance as defined in the Act, the responsible official shall in all cases apply the evaluative criteria promulgated by the U.S. Department of Agriculture at 7 CFR part 658. If categories of important farmlands, which include those defined in both the FPPA and the EPA policy, are identified in the project study area, both direct and indirect effects of the undertaking on the remaining farms and farm support services within the project area and immediate environs shall be evaluated. Adverse effects shall be avoided or mitigated to the extent possible.

(d) *Coastal zone management.* The Coastal Zone Management Act, 16 U.S.C. 1451 *et seq.*, requires that all Federal activities in coastal areas be consistent with approved State Coastal Zone Management Programs, to the maximum extent possible. If an EPA action may affect a coastal zone area, the responsible official shall assess the impact of the action on the coastal zone. If the action significantly affects the coastal zone area and the State has an approved coastal zone management program, a consistency determination shall be sought in accordance with procedures promulgated by the Office of Coastal Zone Management in 15 CFR part 930.

(e) *Wild and scenic rivers.* (1) The Wild and Scenic Rivers Act, 16 U.S.C. 1274 *et seq.*, establishes requirements applicable to water resource projects affecting wild, scenic or recreational rivers within the National Wild and Scenic Rivers system as well as rivers designated on the National Rivers Inventory to be studied for inclusion in the national system. Under the Act, a federal agency may not assist, through grant, loan, license or otherwise, the construction of a water resources project that would have a direct and adverse effect on the values for which a river in the National System or study river on the National Rivers Inventory was established, as determined by the Secretary of the Interior for rivers under the jurisdiction of the Department of the Interior and by the Secretary of Agriculture for rivers under the jurisdiction of the Department of Agriculture. Nothing contained in the foregoing sentence, however, shall:

(i) Preclude licensing of, or assistance to, developments below or above a wild, scenic or recreational river area or on any stream tributary thereto which will not invade the area or unreasonably diminish the scenic, recreational, and fish and wildlife values present in the area on October 2, 1968; or

(ii) Preclude licensing of, or assistance to, developments below or above a study river or any stream tributary thereto which will not invade the area or diminish the scenic, recreational and fish and wildlife values present in the area on October 2, 1968.

(2) The responsible official shall:

(i) Determine whether there are any wild, scenic or study rivers on the National Rivers Inventory or in the planning area, and

(ii) Not recommend authorization of any water resources project that would have a direct and adverse effect on the values for which such river was established, as determined by the administering Secretary in request of appropriations to begin construction of any such project, whether heretofore or hereafter authorized, without advising the administering Secretary, in writing of this intention at least sixty days in advance, and without specifically reporting to the Congress in writing at the time the recommendation or request is made in what respect construction of such project would be in conflict with the purposes of the Wild and Scenic Rivers Act and would affect the component and the values to be protected by the Responsible Official under the Act.

(3) Applicable consultation requirements are found in section 7 of the Act. The Department of Agriculture has promulgated implementing procedures,

under section 7 at 36 CFR part 297, which apply to water resource projects located within, above, below or outside a wild and scenic river or study river under the Department's jurisdiction.

(f) *Barrier islands.* The Coastal Barrier Resources Act, 16 U.S.C. 3501 *et seq.*, generally prohibits new federal expenditures or financial assistance for any purpose within the Coastal Barrier Resources System on or after October 18, 1982. Specified exceptions to this prohibition are allowed only after consultation with the Secretary of the Interior. The responsible official shall ensure that consultation is carried out with the Secretary of the Interior before making available new expenditures or financial assistance for activities within areas covered by the Coastal Barriers Resources Act in accord with the U.S. Fish and Wildlife Service published guidelines defining new expenditures and financial assistance, and describing procedures for consultation at 48 FR 45664 (October 6, 1983).

(g) *Fish and wildlife protection.* The Fish and Wildlife Coordination Act, 16 U.S.C. 661 *et seq.*, requires Federal agencies involved in actions that will result in the control or structural modification of any natural stream or body of water for any purpose, to take action to protect the fish and wildlife resources which may be affected by the action. The responsible official shall consult with the Fish and Wildlife Service and the appropriate State agency to ascertain the means and measures necessary to mitigate, prevent and compensate for project-related losses of wildlife resources and to enhance the resources. Reports and recommendations of wildlife agencies should be incorporated into the environmental assessment or environmental impact statement. Consultation procedures are detailed in 16 U.S.C. 662.

(h) *Endangered species protection.* Under the Endangered Species Act, 16 U.S.C. 1531 *et seq.*, Federal agencies are prohibited from jeopardizing threatened or endangered species or adversely modifying habitats essential to their survival. The responsible official shall identify all designated endangered or threatened species or their habitat that may be affected by an EPA action. If listed species or their habitat may be affected, formal consultation must be undertaken with the Fish and Wildlife Service or the National Marine Fisheries Service, as appropriate. If the consultation reveals that the EPA activity may jeopardize a listed species or habitat, mitigation measures should be considered. Applicable consultation procedures are found in 50 CFR part 402.

[44 FR 64177, Nov. 6, 1979, as amended at 50 FR 26316, June 25, 1985]

§6.303 Air quality.

(a) The Clean Air Act, as amended in 1990, 42 U.S.C. 7476(c), requires Federal actions to conform to any State implementation plan approved or promulgated under section 110 of the Act. For EPA actions, the applicable conformity requirements specified in 40 CFR part 51, subpart W, 40 CFR part 93, subpart B, and the applicable State implementation plan must be met.

(b) In addition, with regard to wastewater treatment works subject to review under Subpart E of this part, the responsible official shall consider the air pollution control requirements specified in section 316(b) of the Clean Air Act, 42 U.S.C. 7616, and Agency implementation procedures.

(c)–(g) [Reserved]

[58 FR 63247, Nov. 30, 1993]

Subpart D—Public and Other Federal Agency Involvement

§6.400 Public involvement.

(a) *General.* EPA shall make diligent efforts to involve the public in the environmental review process consistent with program regulations and EPA policies on public participation. The responsibile official shall ensure that public notice is provided for in accordance with 40 CFR 1506.6(b) and shall ensure that public involvement is carried

out in accordance with EPA Public Participation Regulations, 40 CFR part 25, and other applicable EPA public participation procedures.

(b) *Publication of notices of intent.* As soon as practicable after his decision to prepare an EIS and before the scoping process, the responsible official shall send the notice of intent to interested and affected members of the public and shall request the OEA to publish the notice of intent in the FEDERAL REGISTER. The responsible official shall send to OEA the signed original notice of intent for FEDERAL REGISTER publication purposes. The scoping process should be initiated as soon as practicable in accordance with the requirements of 40 CFR 1501.7. Participants in the scoping process shall be kept informed of substantial changes which evolve during the EIS drafting process.

(c) *Public meetings or hearings.* Public meetings or hearings shall be conducted consistent with Agency program requirements. There shall be a presumption that a scoping meeting will be conducted whenever a notice of intent has been published. The responsible official shall conduct a public hearing on a draft EIS. The responsible official shall ensure that the draft EIS is made available to the public at least 30 days in advance of the hearing.

(d) *Findings of no significant impact (FNSI).* The responsible official shall allow for sufficient public review of a FNSI before it becomes effective. The FNSI and attendant publication must state that interested persons disagreeing with the decision may submit comments to EPA. The responsible official shall not take administrative action on the project for at least thirty (30) calendar days after release of the FNSI and may allow more time for response. The responsible official shall consider, fully, comments submitted on the FNSI before taking administrative action. The FNSI shall be made available to the public in accordance with the requirements and all appropriate recommendations contained in § 1506.6 of this title.

(e) *Record of Decision (ROD).* The responsible official shall disseminate the ROD to those parties which commented on the draft or final EIS.

(f) *Categorical exclusions.* (1) For categorical exclusion determinations under subpart E (Wastewater Treatment Construction Grants Program), an applicant who files for and receives a determination of categorical exclusion under § 6.107(a), or has one rescinded under § 6.107(c), shall publish a notice indicating the determination of eligibility or rescission in a local newspaper of community-wide circulation and indicate the availability of the supporting documentation for public inspection. The responsible official shall, concurrent with the publication of the notice, make the documentation as outlined in § 6.107(b) available to the public and distribute the notice of the determination to all known interested parties.

(2) For categorical exclusion determinations under other subparts of this regulation, no public notice need be issued; however, information regarding these determinations may be obtained by contacting the U.S. Environmental Protection Agency's Office of Research Program Management for ORD actions, or the Office of Federal Activities for other program actions.

[44 FR 64177, Nov. 6, 1979, as amended at 51 FR 32611, Sept. 12, 1986; 56 FR 20543, May 6, 1991]

§ 6.401 Official filing requirements.

(a) *General.* OEA is responsible for the conduct of the official filing system for EISs. This system was established as a central repository for all EISs which serves not only as means of advising the public of the availability of each EIS but provides a uniform method for the computation of minimum time periods for the review of EISs. OEA publishes a weekly notice in the FEDERAL REGISTER listing all EISs received during a given week. The 45-day and 30-day review periods for draft and final EISs, respectively, are computed from the Friday following a given reporting week. Pursuant to 40 CFR 1506.9, responsible officials shall comply with the guidelines established by OEA on the conduct of the filing system.

(b) *Minimum time periods.* No decision on EPA actions shall be made until the later of the following dates:

(1) Ninety (90) days after the date established in §6.401(a) of this part from which the draft EIS review time period is computed.

(2) Thirty (30) days after the date established in §6.401(a) of this part from which the final EIS review time period is computed.

(c) *Filing of EISs.* All EISs, including supplements, must be officially filed with OEA. Responsible officials shall transmit each EIS in five (5) copies to the Director, Office of Environmental Review, EIS Filing Section (A–104). OEA will provide CEQ with one copy of each EIS filed. No EIS will be officially filed by OER unless the EIS has been made available to the public. OEA will not accept unbound copies of EISs for filing.

(d) *Extensions or waivers.* The responsible official may independently extend review periods. In such cases, the responsible official shall notify OEA as soon as possible so that adequate notice may be published in the weekly FEDERAL REGISTER report. OEA upon a showing of compelling reasons of national policy may reduce the prescribed review periods. Also, OEA upon a showing by any other Federal agency of compelling reasons of national policy may extend prescribed review periods, but only after consultation with the responsible official. If the responsible official does not concur with the extension of time, OEA may not extend a prescribed review period more than 30 days beyond the minimum prescribed review period.

(e) *Rescission of filed EISs.* The responsible official shall file EISs with OEA at the same time they are transmitted to commenting agencies and made available to the public. The responsible official is required to reproduce an adequate supply of EISs to satisfy these distribution requirements prior to filing an EIS. If the EIS is not made available, OEA will consider retraction of the EIS or revision of the prescribed review periods based on the circumstances.

[44 FR 64177, Nov. 6, 1979, as amended at 47 FR 9829, Mar. 8, 1982]

§6.402 Availability of documents.

(a) *General.* The responsible official will ensure sufficient copies of the EIS are distributed to interested and affected members of the public and are made available for further public distribution. EISs, comments received, and any underlying documents should be available to the public pursuant to the provisions of the Freedom of Information Act (5 U.S.C. 552(b)), without regard to the exclusion for interagency memoranda where such memoranda transmit comments of Federal agencies on the environmental impact of the proposed actions. To the extent practicable, materials made available to the public shall be provided without charge; otherwise, a fee may be imposed which is not more than the actual cost of reproducing copies required to be sent to another Federal agency.

(b) *Public information.* Lists of all notices, determinations and other reports/documentation, related to these notices and determinations, involving CEs, EAs, FNSIs, notices of intent, EISs, and RODs prepared by EPA shall be available for public inspection and maintained by the responsible official as a monthly status report. OEA shall maintain a comprehensive list of notices of intent and draft and final EISs provided by all responsible officials for public inspection including publication in the FEDERAL REGISTER. In addition, OEA will make copies of all EPA-prepared EISs available for public inspection; the responsible official shall do the same for any EIS he/she undertakes.

[44 FR 64177, Nov. 6, 1979, as amended at 51 FR 32611, Sept. 12, 1986]

§6.403 The commenting process.

(a) *Inviting comments.* After preparing a draft EIS and before preparing a final EIS, the responsible official shall obtain the comments of Federal agencies, other governmental entities and the public in accordance with 40 CFR 1503.1.

(b) *Response to comments.* The responsible official shall respond to comments in the final EIS in accordance with 40 CFR 1503.4.

§6.404 Supplements.

(a) *General.* The responsible official shall consider preparing supplements to draft and final EISs in accordance with 40 CFR 1502.9(c). A supplement

shall be prepared, circulated and filed in the same fashion (exclusive of scoping) as draft and final EISs.

(b) *Alternative procedures.* In the case where the responsible official wants to deviate from existing procedures, OEA shall be consulted. OEA shall consult with CEQ on any alternative arrangements.

[44 FR 64177, Nov. 6, 1979, as amended at 47 FR 9829, Mar. 8, 1982]

Subpart E—Environmental Review Procedures for Wastewater Treatment Construction Grants Program

SOURCE: 50 FR 26317, June 25, 1985, unless otherwise noted.

§ 6.500 Purpose.

This subpart amplifies the procedures described in subparts A through D with detailed environmental review procedures for the Municipal Wastewater Treatment Works Construction Grants Program under Title II of the Clean Water Act.

§ 6.501 Definitions.

(a) *Step 1 facilities planning* means preparation of a plan for facilities as described in 40 CFR part 35, subpart E or I.

(b) *Step 2* means a project to prepare design drawings and specifications as described in 40 CFR part 35, subpart E or I.

(c) *Step 3* means a project to build a publicly owned treatment works as described in 40 CFR part 35, subpart E or I.

(d) *Step 2+3* means a project which combines preparation of design drawings and specifications as described in § 6.501(b) and building as described in § 6.501(c).

(e) *Applicant* means any individual, agency, or entity which has filed an application for grant assistance under 40 CFR part 35, subpart E or I.

(f) *Grantee* means any individual, agency, or entity which has been awarded wastewater treatment construction grant assistance under 40 CFR part 35, subpart E or I.

(g) *Responsible Official* means a Federal or State official authorized to fulfill the requirements of this subpart. The responsible federal official is the EPA Regional Administrator and the responsible State official is as defined in a delegation agreement under 205(g) of the Clean Water Act. The responsibilities of the State official are subject to the limitations in § 6.514 of this subpart.

(h) *Approval of the facilities plan* means approval of the facilities plan for a proposed wastewater treatment works pursuant to 40 CFR part 35, subpart E or I.

§ 6.502 Applicability and limitations.

(a) *Applicability.* This subpart applies to the following actions:

(1) Approval of a facilities plan or an amendment to the plan;

(2) Award of grant assistance for a project where signficant change has occurred in the project or its impact since prior compliance with this part; and

(3) Approval of preliminary Step 3 work prior to the award of grant assistance pursuant to 40 CFR part 35, subpart E or I.

(b) *Limitations.* (1) Except as provided in § 6.504(c), all recipients of Step 1 grant assistance must comply with the requirements, steps, and procedures described in this subpart.

(2) As specified in 40 CFR 35.2113, projects that have not received Step 1 grant assistance must comply with the requirements of this subpart prior to submission of an application for Step 3 or Step 2+3 grant assistance.

(3) Except as otherwise provided in § 6.507, no step 3 or 2+3 grant assistance may be awarded for the construction of any component/portion of a proposed wastewater treatment system(s) until the responsible official has:

(i) Completed the environmental review for all complete wastewater treatment system alternatives under consideration for the facilities planning area, or any larger study area identified for the purposes of conducting an adequate environmental review as required under this subpart; and

(ii) Recorded the selection of the preferred alternative(s) in the appropriate decision document (ROD for EISs, FNSI for environmental assessments,

or written determination for categorical exclusions).

(4) In accord with §6.302(f), on or after October 18, 1982, no new expenditures or financial assistance involving the construction grants program can be made within the Coastal Barrier Resource System, or for projects outside the system which would have the effect of encouraging development in the system, other than specified exceptions made by the EPA after consultation with the Secretary of the Interior.

[50 FR 26317, June 25, 1985, as amended at 51 FR 32611, Sept. 12, 1986]

§6.503 Overview of the environmental review process.

The process for conducting an environmental review of wastewater treatment construction grant projects includes the following steps:

(a) *Consultation.* The Step 1 grantee or the potential Step 3 or Step 2+3 applicant is encouraged to consult with the State and EPA early in project formulation or the facilities planning stage to determine whether a project is eligible for a categorical exclusion from the remaining substantive environmental review requirements of this part (§6.505), to determine alternatives to the proposed project for evaluation, to identify potential environmental issues and opportunities for public recreation and open space, and to determine the potential need for partitioning the environmental review process and/or the need for an Environmental Impact Statement (EIS).

(b) *Determining categorical exclusion eligibility.* At the request of a potential Step 3 or Step 2+3 grant applicant, or a Step 1 facilities planning grantee, the responsible official will determine if a project is eligible for a categorical exclusion in accordance with §6.505. A Step 1 facilities planning grantee awarded a Step 1 grant on or before December 29, 1981 may request a categorical exclusion at any time during Step 1 facilities planning. A potential Step 3 or Step 2+3 grant applicant may request a categorical exclusion at any time before the submission of a Step 3 or Step 2+3 grant application.

(c) *Documenting environmental information.* If the project is determined to be ineligible for a categorical exclusion, or if no request for a categorical exclusion is made, the potential Step 3 or Step 2+3 applicant or the Step 1 grantee subsequently prepares an Environmental Information Document (EID) (§6.506) for the project.

(d) *Preparing environmental assessments.* Except as provided in §6.506(c)(4) and following a review of the EID by EPA or by a State with delegated authority, EPA prepares an environmental assessment (§6.506), or a State with delegated authority (§6.514) prepares a preliminary environmental assessment. EPA reviews and finalizes any preliminary assessments. EPA subsequently:

(1) Prepares and issues a Finding of No Significant Impact (FNSI) (§6.508); or

(2) Prepares and issues a Notice of Intent to prepare an original or supplemental EIS (§6.510) and Record of Decision (ROD) (§6.511).

(e) *Monitoring.* The construction and post-construction operation and maintenance of the facilities are monitored (§6.512) to ensure implementation of mitigation measures (§6.511) identified in the FNSI or ROD.

[50 FR 26317, June 25, 1985, as amended at 51 FR 32611, Sept. 12, 1986]

§6.504 Consultation during the facilities planning process.

(a) *General.* Consistent with 40 CFR 1501.2 and 35.2030(c), the responsible official shall initiate the environmental review process early to identify environmental effects, avoid delays, and resolve conflicts. The environmental review process should be integrated throughout the facilities planning process. Two processes for consultation are described in this section to meet this objective. The first addresses projects awarded Step 1 grant assistance on or before December 29, 1981. The second applies to projects not receiving grant assistance for facilities planning on or before December 29, 1981 and, therefore, subject to the regulations implementing the Municipal Wastewater Treatment Construction Grant Amendments of 1981 (40 CFR part 35, subpart I).

(b) *Projects receiving Step 1 grant assistance on or before December 29, 1981.* (1) During facilities planning, the

grantee shall evaluate project alternatives and the existence of environmentally important resource areas including those identified in § 6.108 and § 6.509 of this subpart, and potential for open space and recreation opportunities in the facilities planning area. This evaluation is intended to be brief and concise and should draw on existing information from EPA, State agencies, regional planning agencies, areawide water quality management agencies, and the Step 1 grantee. The Step 1 grantee should submit this information to EPA or a delegated State at the earliest possible time during facilities planning to allow EPA to determine if the action is eligible for a categorical exclusion. The evaluation and any additional analysis deemed necessary by the responsible official may be used by EPA to determine whether the action is eligible for a categorical exclusion from the substantive environmental review requirements of this part. If a categorical exclusion is granted, the grantee will not be required to prepare a formal EID nor will the responsible official be required to prepare an environmental assessment under NEPA. If an action is not granted a categorical exclusion, this evaluation may be used to determine the scope of the EID required of the grantee. This information can also be used to make an early determination of the need for partitioning the environmental review or for an EIS. Whenever possible, the Step 1 grantee should discuss this initial evaluation with both the delegated State and EPA.

(2) A review of environmental information developed by the grantee should be conducted by the responsible official whenever meetings are held to assess the progress of facilities plan development. These meetings should be held after completion of the majority of the EID document and before a preferred alternative is selected. Since any required EIS must be completed before the approval of a facilities plan, a decision whether to prepare an EIS is encouraged early during the facilities planning process. These meetings may assist in this early determination. EPA should inform interested parties of the following:

(i) The preliminary nature of the Agency's position on preparing an EIS;

(ii) The relationship between the facilities planning and environmental review processes;

(iii) The desirability of public input; and

(iv) A contact person for further information.

(c) *Projects not receiving grant assistance for Step 1 facilities planning on or before December 29, 1981.* Potential Step 3 or Step 2+3 grant applicants should, in accordance with § 35.2030(c), consult with EPA and the State early in the facilities planning process to determine the appropriateness of a categorical exclusion, the scope of an EID, or the appropriateness of the early preparation of an environmental assessment or an EIS. The consultation would be most useful during the evaluation of project alternatives prior to the selection of a preferred alternative to assist in resolving any identified environmental problems.

§ 6.505 Categorical exclusions.

(a) *General.* At the request of an existing Step 1 facilities planning grantee or of a potential Step 3 or Step 2+3 grant applicant, the responsible official, as provided for in §§ 6.107(b), 6.400(f) and 6.504(a), shall determine from existing information and document whether an action is consistent with the categories eligible for exclusion from NEPA review identified in § 6.107(d) or § 6.505(b) and not inconsistent with the criteria in § 6.107(e) or § 6.505(c).

(b) *Specialized categories of actions eligible for exclusion.* For this subpart, eligible actions consist of any of the categories in § 6.107(d), or:

(1) Actions for which the facilities planning is consistent with the category listed in § 6.107(d)(1) which do not affect the degree of treatment or capacity of the existing facility including, but not limited to, infiltration and inflow corrections, grant-eligible replacement of existing mechanical equipment or structures, and the construction of small structures on existing sites;

(2) Actions in sewered communities of less than 10,000 persons which are for minor upgrading and minor expansion

of existing treatment works. This category does not include actions that directly or indirectly involve the extension of new collection systems funded with federal or other sources of funds;

(3) Actions in unsewered communities of less than 10,000 persons where on-site technologies are proposed; or

(4) Other actions are developed in accordance with §6.107(f).

(c) *Specialized Criteria for not granting a categorical exclusion.* (1) The full environmental review procedures of this part must be followed if undertaking an action consistent with the categories described in paragraph (b) of this section meets any of the criteria listed in §6.107(e) or when:

(i) The facilities to be provided will (A) create a new, or (B) relocate an existing, discharge to surface or ground waters;

(ii) The facilities will result in substantial increases in the volume of discharge or the loading of pollutants from an existing source or from new facilities to receiving waters; or

(iii) The facilities would provide capacity to serve a population 30% greater than the existing population.

(d) *Proceeding with grant awards.* (1) After a categorical exclusion on a proposed treatment works has been granted, and notices published in accordance with §6.400(f), grant awards may proceed without being subject to any further environmental review requirements under this part, unless the responsible official later determines that the project, or the conditions at the time the categorical determination was made, have changed significantly since the independent EPA review of information submitted by the grantee in support of the exclusion.

(2) For all categorical exclusion determinations:

(i) That are five or more years old on projects awaiting Step 2+3 or Step 3 grant funding, the responsible official shall re-evaluate the project, environmental conditions and public views and, prior to grant award, either:

(A) *Reaffirm*—issue a public notice reaffirming EPA's decision to proceed with the project without need for any further environmental review;

(B) *Supplement*—update the information in the decision document on the categorically excluded project and prepare, issue, and distribute a revised notice in accordance with §6.107(f); or

(C) *Reassess*—revoke the categorical exclusion in accordance with §6.107(c) and require a complete environmental review to determine the need for an EIS in accordance with §6.506, followed by preparation, issuance and distribution of an EA/FNSI or EIS/ROD.

(ii) That are made on projects that have been awarded a Step 2+3 grant, the responsible official shall, at the time of plans and specifications review under §35.2202(b) of this title, assess whether the environmental conditions or the project's anticipated impact on the environment have changed and, prior to plans and specifications approval, advise the Regional Administrator if additional environmental review is necessary.

[50 FR 26317, June 25, 1985, as amended at 51 FR 32611, Sept. 12, 1986]

§6.506 Environmental review process.

(a) *Review of completed facilities plans.* The responsible official shall ensure a review of the completed facilities plan with particular attention to the EID and its utilization in the development of alternatives and the selection of a preferred alternative. An adequate EID shall be an integral part of any facilities plan submitted to EPA or to a State. The EID shall be of sufficient scope to enable the responsible official to make determinations on requests for partitioning the environmental review process in accordance with §6.507 and for preparing environmental assessments in accordance with §6.506(b).

(b) *Environmental assessment.* The environmental assessment process shall cover all potentially significant environmental impacts. The responsible official shall prepare a preliminary environmental assessment on which to base a recommendation to finalize and issue the environmental assessment/FNSI. For those States delegated environmental review responsibilities under §6.514, the State responsible official shall prepare the preliminary environmental assessment in sufficient detail to serve as an adequate basis for EPA's independent NEPA review and decision to finalize and issue an environmental assessment/FNSI or to prepare and

issue a notice of intent for an EIS/ROD. The EPA also may require submission of supplementary information before the facilities plan is approved if needed for its independent review of the State's preliminary assessment for compliance with environmental review requirements. Substantial requests for supplementary information by EPA, including the review of the facilities plan, shall be made in writing. Each of the following subjects outlined below, and requirements of subpart C of this part, shall be reviewed by the responsible official to identify potentially significant environmental concerns and their associated potential impacts, and the responsible official shall furthermore address these concerns and impacts in the environmental assessment:

(1) *Description of the existing environment.* For the delineated facilities planning area, the existing environmental conditions relevant to the analysis of alternatives, or to determining the environmental impacts of the proposed action, shall be considered.

(2) *Description of the future environment without the project.* The relevant future environmental conditions shall be described. The no action alternative should be discussed.

(3) *Purpose and need.* This should include a summary discussion and demonstration of the need, or absence of need, for wastewater treatment in the facilities planning area, with particular emphasis on existing public health or water quality problems and their severity and extent.

(4) *Documentation.* Citations to information used to describe the existing environment and to assess future environmental impacts should be clearly referenced and documented. These sources should include, as appropriate but not limited to, local, tribal, regional, State, and federal agencies as well as public and private organizations and institutions with responsibility or interest in the types of conditions listed in § 6.509 and in subpart C of this part.

(5) *Analysis of alternatives.* This discussion shall include a comparative analysis of feasible alternatives, including the no action alternative, throughout the study area. The alternatives shall be screened with respect to capital and operating costs; direct, indirect, and cumulative environmental effects; physical, legal, or institutional constraints; and compliance with regulatory requirements. Special attention should given to: the environmental consequences of long-term, irreversible, and induced impacts; and for projects initiated after September 30, 1978, that grant applicants have satisfactorily demonstrated analysis of potential recreation and open-space opportunities in the planning of the proposed treatment works. The reasons for rejecting any alternatives shall be presented in addition to any significant environmental benefits precluded by rejection of an alternative. The analysis should consider when relevant to the project:

(i) Flow and waste reduction measures, including infiltration/inflow reduction and pretreatment requirements;

(ii) Appropriate water conservation measures;

(iii) Alternative locations, capacities, and construction phasing of facilities;

(iv) Alternative waste management techniques, including pretreatment, treatment and discharge, wasterwater reuse, land application, and individual systems;

(v) Alternative methods for management of sludge, other residual materials, including utilization options such as land application, composting, and conversion of sludge for marketing as a soil conditioner or fertilizer;

(vi) Improving effluent quality through more efficient operation and maintenance;

(vii) Appropriate energy reduction measures; and

(viii) Multiple use including recreation, other open space, and environmental education.

(6) *Evaluating environmental consequences of proposed action.* A full range of relevant impacts of the proposed action shall be discussed, including measures to mitigate adverse impacts, any irreversible or irretrievable commitments of resources to the project and the relationship between local short-term uses of the environment and the maintenance and enhancement of long-term productivity.

Any specific requirements, including grant conditions and areawide waste treatment management plan requirements, should be identified and referenced. In addition to these items, the responsible official may require that other analyses and data in accordance with subpart C which are needed to satisfy environmental review requirements be included with the facilities plan. Such requirements should be discussed whenever meetings are held with Step 1 grantees or potential Step 3 or Step 2 + 3 applicants.

(7) *Minimizing adverse effects of the proposed action.* (i) Structural and non-structural measures, directly or indirectly related to the facilities plan, to mitigate or eliminate adverse effects on the human and natural environments, shall be identified during the environmental review. Among other measures, structual provisions include changes in facility design, size, and location; non-structural provisions include staging facilities, monitoring and enforcement of environmental regulations, and local commitments to develop and enforce land use regulations.

(ii) The EPA shall not accept a facilities plan, nor award grant assistance for its implementation, if the applicant/grantee has not made, or agreed to make, changes in the project, in accordance with determinations made in a FNSI based on its supporting environmental assessment or the ROD for a EIS. The EPA shall condition a grant, or seek other ways, to ensure that the grantee will comply with such environmental review determinations.

(c) *FNSI/EIS determination.* The responsible official shall apply the criteria under §6.509 to the following:

(1) A complete facilities plan;

(2) The EID;

(3) The preliminary environmental assessment; and

(4) Other documentation, deemed necessary by the responsible official adequate to make an EIS determination by EPA. Where EPA determines that an EIS is to be prepared, there is no need to prepare a formal environmental assessment. If EPA or the State identifies deficiencies in the EID, preliminary environmental assessment, or other supporting documentation, necessary corrections shall be made to this documentation before the conditions of the Step 1 grant are considered satisfied or before the Step 3 or Step 2+3 application is considered complete. The responsible official's determination to issue a FNSI or to prepare an EIS shall constitute final Agency action, and shall not be subject to administrative review under 40 CFR part 30, subpart L.

[50 FR 26317, June 25, 1985, as amended at 51 FR 32612, Sept. 12, 1986]

§6.507 Partitioning the environmental review process.

(a) *Purpose.* Under certain circumstances the building of a component/portion of a wastewater treatment system may be justified in advance of completing all NEPA requirements for the remainder of the system(s). When there are overriding considerations of cost or impaired program effectiveness, the responsible official may award a construction grant, or approve procurement by other than EPA funds, for a discrete component of a complete wastewater treatment system(s). The process of partitioning the environmental review for the discrete component shall comply with the criteria and procedures described in paragraph (b) of this section. In addition, all reasonable alternatives for the overall wastewater treatment works system(s) of which the component is a part shall have been previously identified, and each part of the environmental review for the remainder of the overall facilities system(s) in the planning area in accordance with §6.502(b)(3) shall comply with all requirements under §6.506.

(b) *Criteria for partitioning.* (1) Projects may be partitioned under the following circumstances:

(i) To overcome impaired program effectiveness, the project component, in addition to meeting the criteria listed in paragraph (b)(2) of this section, must immediately remedy a severe public health, water quality or other environmental problem; or

(ii) To significantly reduce direct costs on EPA projects, or other related public works projects, the project component (such as major pieces of equipment, portions of conveyances or small structures) in addition to meeting the criteria listed in paragraph (b)(2) of

this section, must achieve a cost savings to the federal government and/or to the grantee's or potential grantee's overall costs incurred in procuring the wastewater treatment component(s) and/or the installation of other related public works projects funded in coordination with other federal, State, tribal or local agencies.

(2) The project component also must:

(i) Not foreclose any reasonable alternatives identified for the overall wastewater treatment works system(s);

(ii) Not cause significant adverse direct or indirect environmental impacts including those which cannot be acceptably mitigated without completing the entire wastewater treatment system of which the component is a part; and

(iii) Not be highly controversial.

(c) *Requests for partitioning.* The applicant's or State's request for partitioning must contain the following:

(1) A description of the discrete component proposed for construction before completing the environmental review of the entire facilities plan;

(2) How the component meets the above criteria;

(3) The environmental information required by § 6.506 of this subpart for the component; and

(4) Any preliminary information that may be important to EPA in an EIS determination for the entire facilities plan (§ 6.509).

(d) *Approval of requests for partitioning.* The responsible official shall:

(1) Review the request for partitioning against all requirements of this subpart;

(2) If approvable, prepare and issue a FNSI in accordance with § 6.508;

(3) Include a grant condition prohibiting the building of additional or different components of the entire facilities system(s) in the planning area as described in § 6.502(b)(3)(i).

[50 FR 26317, June 25, 1985, as amended at 51 FR 32612, Sept. 12, 1986]

§ 6.508 Finding of No Significant Impact (FNSI) determination.

(a) *Criteria for producing and distributing FNSIs.* If, after completion of the environmental review, EPA determines that an EIS will not be required, the responsible official shall issue a FNSI in accordance with §§ 6.105(f) and 6.400(d). The FNSI will be based on EPA's independent review of the preliminary environmental assessment and any other environmental information deemed necessary by the responsible official consistent with the requirements of § 6.506(c). Following the Agency's independent review, the environmental assessment will be finalized and either be incorporated into, or attached to, the FNSI. The FNSI shall list all mitigation measures as defined in § 1508.20 of this title, and specifically identify those mitigation measures necessary to make the recommended alternative environmentally acceptable.

(b) *Proceeding with grant awards.* (1) Once an environmental assessment has been prepared and the issued FNSI becomes effective for the treatment works within the study area, grant awards may proceed without preparation of additional FNSIs, unless the responsible official later determines that the project or environmental conditions have changed significantly from that which underwent environmental review.

(2) For all environmental assessment/FNSI determinations:

(i) That are five or more years old on projects awaiting Step 2+3 or Step 3 grant funding, the responsible official shall re-evaluate the project, environmental conditions and public views and, prior to grant award, either:

(A) *Reaffirm*—issue a public notice reaffirming EPA's decision to proceed with the project without revising the environmental assessment;

(B) *Supplement*—update information and prepare, issue and distribute a revised EA/FNSI in accordance with §§ 6.105(f) and 6.400(d); or

(C) *Reassess*—withdraw the FNSI and publish a notice of intent to produce an EIS followed by the preparation, issuance and distribution of the EIS/ROD.

(ii) That are made on projects that have been awarded a Step 2+3 grant, the responsible official shall, at the time of plans and specifications review under § 35.2202(b) of this title, assess whether the environmental conditions or the project's anticipated impact on the environment have changed and,

prior to plans and specifications approval, advise the Regional Administrator if additional environmental review is necessary.

[51 FR 32612, Sept. 12, 1986]

§6.509 Criteria for initiating Environmental Impact Statements (EIS).

(a) *Conditions requiring EISs.* (1) The responsible official shall assure that an EIS will be prepared and issued when it is determined that the treatment works or collector system will cause any of the conditions under §6.108 to exist, or when

(2) The treated effluent is being discharged into a body of water where the present classification is too lenient or is being challenged as too low to protect present or recent uses, and the effluent will not be of sufficient quality or quantity to meet the requirements of these uses.

(b) *Other conditions.* The responsible official shall also consider preparing an EIS if: The project is highly controversial; the project in conjunction with related Federal, State, local or tribal resource projects produces significant cumulative impacts; or if it is determined that the treatment works may violate federal, State, local or tribal laws or requirements imposed for the protection of the environment.

§6.510 Environmental Impact Statement (EIS) preparation.

(a) *Steps in preparing EISs.* In addition to the requirements specified in subparts A, B, C, and D of this part, the responsible official will conduct the following activities:

(1) *Notice of intent.* If a determination is made that an EIS will be required, the responsible official shall prepare and distribute a notice of intent as required in §6.105(e) of this part.

(2) *Scoping.* As soon as possible, after the publication of the notice of intent, the responsible official will convene a meeting of affected federal, State and local agencies, or affected Indian tribes, the grantee and other interested parties to determine the scope of the EIS. A notice of this scoping meeting must be made in accordance with §6.400(a) and 40 CFR 1506.6(b). As part of the scoping meeting EPA, in cooperation with any delegated State, will as a minimum:

(i) Determine the significance of issues for and the scope of those significant issues to be analyzed in depth, in the EIS;

(ii) Identify the preliminary range of alternatives to be considered;

(iii) Identify potential cooperating agencies and determine the information or analyses that may be needed from cooperating agencies or other parties;

(iv) Discuss the method for EIS preparation and the public participation strategy;

(v) Identify consultation requirements of other environmental laws, in accordance with subpart C; and

(vi) Determine the relationship between the EIS and the completion of the facilities plan and any necessary coordination arrangements between the preparers of both documents.

(3) *Identifying and evaluating alternatives.* Immediately following the scoping process, the responsible official shall commence the identification and evaluation of all potentially viable alternatives to adequately address the range of issues identified in the scoping process. Additional issues may be addressed, or others eliminated, during this process and the reasons documented as part of the EIS.

(b) *Methods for preparing EISs.* After EPA determines the need for an EIS, it shall select one of the following methods for its preparation:

(1) Directly by EPA's own staff;

(2) By EPA contracting directly with a qualified consulting firm;

(3) By utilizing a third party method, whereby the responsible official enters into ''third party agreements'' for the applicant to engage and pay for the services of a third party contractor to prepare the EIS. Such agreement shall not be initiated unless both the applicant and the responsible official agree to its creation. A third party agreement will be established prior to the applicant's EID and eliminate the need for that document. In proceeding under the third party agreement, the responsible official shall carry out the following practices:

(i) In consultation with the applicant, choose the third party contractor and manage that contract;

(ii) Select the consultant based on ability and an absence of conflict of interest. Third party contractors will be required to execute a disclosure statement prepared by the responsible official signifying they have no financial or other conflicting interest in the outcome of the project; and

(iii) Specify the information to be developed and supervise the gathering, analysis and presentation of the information. The responsible official shall have sole authority for approval and modification of the statements, analyses, and conclusions included in the third party EIS; or

(4) By utilizing a joint EPA/State process on projects within States which have requirements and procedures comparable to NEPA, whereby the EPA and the State agree to prepare a single EIS document to fulfill both federal and State requirements. Both EPA and the State shall sign a Memorandum of Agreement which includes the responsibilities and procedures to be used by both parties for the preparation of the EIS as provided for in 40 CFR 1506.2(c).

§ 6.511 Record of Decision (ROD) for EISs and identification of mitigation measures.

(a) *Record of Decision*. After a final EIS has been issued, the responsible official shall prepare and issue a ROD in accordance with 40 CFR 1505.2 prior to, or in conjunction with, the approval of the facilities plan. The ROD shall include identification of mitigation measures derived from the EIS process including grant conditions which are necessary to minimize the adverse impacts of the selected alternative.

(b) *Specific mitigation measures.* Prior to the approval of a facilities plan, the responsible official must ensure that effective mitigation measures identified in the ROD will be implemented by the grantee. This should be done by revising the facilities plan, initiating other steps to mitigate adverse effects, or including conditions in grants requiring actions to minimize effects. Care should be exercised if a condition is to be imposed in a grant document to assure that the applicant possesses the authority to fulfill the conditions.

(c) *Proceeding with grant awards.* (1) Once the ROD has been prepared on the selected, or preferred, alternative(s) for the treatment works described within the EIS, grant awards may proceed without the preparation of supplemental EISs unless the responsible official later determines that the project or the environmental conditions described within the current EIS have changed significantly from the previous environmental review in accordance with § 1502.9(c) of this title.

(2) For all EIS/ROD determinations:

(i) That are five or more years old on projects awaiting Step 2+3 or Step 3 grant funding, the responsible official shall re-evaluate the project, environmental conditions and public views and, prior to grant award, either:

(A) *Reaffirm*—issue a public notice reaffirming EPA's decision to proceed with the project, and documenting that no additional significant impacts were identified during the re-evaluation which would require supplementing the EIS; or

(B) *Supplement*—conduct additional studies and prepare, issue and distribute a supplemental EIS in accordance with § 6.404 and document the original, or any revised, decision in an addendum to the ROD.

(ii) That are made on projects that have been awarded a Step 2+3 grant, the responsible official shall, at the time of plans and specifications review under § 35.2202(b) of this title, assess whether the environmental conditions or the project's anticipated impact on the environment have changed, and prior to plans and specifications approval, advise the Regional Administrator if additional environmental review is necessary.

[50 FR 26317, June 25, 1985, as amended at 51 FR 32613, Sept. 12, 1986]

§ 6.512 Monitoring for compliance.

(a) *General.* The responsible official shall ensure adequate monitoring of mitigation measures and other grant conditions identified in the FNSI, or ROD.

(b) *Enforcement.* If the grantee fails to comply with grant conditions, the responsible official may consider applying any of the sanctions specified in 40 CFR 30.900.

§6.513 Public participation.

(a) *General.* Consistent with public participation regulations in part 25 of this title, and subpart D of this part, it is EPA policy that certain public participation steps be achieved before the State and EPA complete the environmental review process. As a minimum, all potential applicants that do not qualify for a categorical exclusion shall conduct the following steps in accordance with procedures specified in part 25 of this title:

(1) One public meeting when alternatives have been developed, but before an alternative has been selected, to discuss all alternatives under consideration and the reasons for rejection of others; and

(2) One public hearing prior to formal adoption of a facilities plan to discuss the proposed facilities plan and any needed mitigation measures.

(b) *Coordination.* Public participation activities undertaken in connection with the environmental review process should be coordinated with any other applicable public participation program wherever possible.

(c) *Scope.* The requirements of 40 CFR 6.400 shall be fulfilled, and consistent with 40 CFR 1506.6, the responsible official may institute such additional NEPA-related public participation procedures as are deemed necessary during the environmental review process.

[50 FR 26317, June 25, 1985, as amended at 51 FR 32613, Sept. 12, 1986]

§6.514 Delegation to States.

(a) *General.* Authority delegated to the State under section 205(g) of the Clean Water Act to review a facilities plan may include all EPA activities under this part except for the following:

(1) Determinations of whether or not a project qualifies for a categorical exclusion;

(2) Determinations to partition the environmental review process;

(3) Finalizing the scope of an EID when required to adequately conclude an independent review of a preliminary environmental assessment;

(4) Finalizing the scope of an environmental assessment, and finalization, approval and issuance of a final environmental assessment;

(5) Determination to issue, and issuance of, a FNSI based on a completed (§6.508) or partitioned (§6.507(d)(2)) environmental review;

(6) Determination to issue, and issuance of, a notice of intent for preparing an EIS;

(7) Preparation of EISs under §6.510(b) (1) and (2), final decisions required for preparing an EIS under §6.510(b)(3), finalizing the agreement to prepare an EIS under §6.510(b)(4), finalizing the scope of an EIS, and issuance of draft, final and supplemental EISs;

(8) Preparation and issuance of the ROD based on an EIS;

(9) Final decisions under other applicable laws described in subpart C of this part;

(10) Determination following re-evaluations of projects awaiting grant funding in the case of Step 3 projects whose existing evaluations and/or decision documents are five or more years old, or determinations following re-evaluations on projects submitted for plans and specifications review and approval in the case of awarded Step 2+3 projects where the EPA Regional Administrator has been advised that additional environmental review is necessary, in accordance with §6.505(d)(2), §6.508(b)(2) or §6.511(c)(2); and

(11) Maintenance of official EPA monthly status reports as required under §6.402(b).

(b) *Elimination of duplication.* The responsible official shall assure that maximum efforts are undertaken to minimize duplication within the limits described under paragraph (a) of this section. In carrying out requirements under this subpart, maximum consideration shall be given to eliminating duplication in accordance with §1506.2 of this title. Where there are State or local procedures comparable to NEPA, EPA should enter into memoranda of understanding with these States concerning workload distribution and responsibilities not specifically reserved to EPA in paragraph (a) of this section

for implementing the environmental review and facilities planning process.

[50 FR 26317, June 25, 1985, as amended at 51 FR 32613, Sept. 12, 1986]

Subpart F—Environmental Review Procedures for the New Source NPDES Program

§ 6.600 Purpose.

(a) *General.* This subpart provides procedures for carrying out the environmental review process for the issuance of new source National Pollutant Discharge Elimination System (NPDES) discharge permits authorized under section 306, section 402, and section 511(c)(1) of the Clean Water Act.

(b) *Permit regulations.* All references in this subpart to the *permit regulations* shall mean parts 122 and 124 of title 40 of the CFR relating to the NPDES program.

[44 FR 64177, Nov. 6, 1979, as amended at 47 FR 9831, Mar. 8, 1982]

§ 6.601 Definitions.

(a) The term *administrative action* for the sake of this subpart means the issuance by EPA of an NPDES permit to discharge as a new source, pursuant to 40 CFR 124.15.

(b) The term *applicant* for the sake of this subpart means any person who applies to EPA for the issuance of an NPDES permit to discharge as a new source.

[44 FR 64177, Nov. 6, 1979, as amended at 47 FR 9831, Mar. 8, 1982]

§ 6.602 Applicability.

(a) *General.* The procedures set forth under subparts A, B, C and D, and this subpart shall apply to the issuance of new source NPDES permits, except for the issuance of a new source NPDES permit from any State which has an approved NPDES program in accordance with section 402(b) of the Clean Water Act.

(b) *New Source Determination.* An NPDES permittee must be determined a *new source* before these procedures apply. New source determinations will be undertaken pursuant to the provisions of the permit regulations under § 122.29(a) and (b) of this chapter and § 122.53(h).

[44 FR 64177, Nov. 6, 1979, as amended at 47 FR 9831, Mar. 8, 1982; 51 FR 32613, Sept. 12, 1986]

§ 6.603 Limitations on actions during environmental review process.

The processing and review of an applicant's NPDES permit application shall proceed concurrently with the procedures within this subpart. Actions undertaken by the applicant or EPA shall be performed consistent with the requirements of § 122.29(c) of this chapter.

[47 FR 9831, Mar. 8, 1982, as amended at 51 FR 32613, Sept. 12, 1986]

§ 6.604 Environmental review process.

(a) *New source.* If EPA's initial determination under § 6.602(b) is that the facility is a new source, the responsible official shall evaluate any environmental information to determine if any significant impacts are anticipated and an EIS is necessary. If the permit applicant requests, the responsible official shall establish time limits for the completion of the environmental review process consistent with 40 CFR 1501.8.

(b) *Information needs.* Information necessary for a proper environmental review shall be provided by the permit applicant in an environmental information document. The responsible official shall consult with the applicant to determine the scope of an environmental information document. In doing this the responsible official shall consider the size of the new source and the extent to which the applicant is capable of providing the required information. The responsible official shall not require the applicant to gather data or perform analyses which unnecessarily duplicate either existing data or the results of existing analyses available to EPA. The responsible official shall keep requests for data to the minimum consistent with his responsibilities under NEPA.

(c) *Environmental assessment.* The responsible official shall prepare a written environmental assessment based on an environmental review of either the environmental information document

and/or any other available environmental information.

(d) *EIS determination.* (1) When the environmental review indicates that a significant environmental impact may occur and that the significant adverse impacts cannot be eliminated by making changes in the proposed new source project, a notice of intent shall be issued, and a draft EIS prepared and distributed. When the environmental review indicates no significant impacts are anticipated or when the proposed project is changed to eliminate the significant adverse impacts, a FNSI shall be issued which lists any mitigation measures necessary to make the recommended alternative environmentally acceptable.

(2) The FNSI together with the environmental assessment that supports the finding shall be distributed in accordance with §6.400(d) of this regulation.

(e) *Lead agency.* (1) If the environmental review reveals that the preparation of an EIS is required, the responsible official shall determine if other Federal agencies are involved with the project. The responsible official shall contact all other involved agencies and together the agencies shall decide the lead agency based on the criteria set forth in 40 CFR 1501.5.

(2) If, after the meeting of involved agencies, EPA has been determined to be the lead agency, the responsible official may request that other involved agencies be cooperating agencies. Cooperating agencies shall be chosen and shall be involved in the EIS preparation process in the manner prescribed in the 40 CFR 1501.6(a). If EPA has been determined to be a cooperating agency, the responsible official shall be involved in assisting in the preparation of the EIS in the manner prescribed in 40 CFR 1501.6(b).

(f) *Notice of intent.* (1) If EPA is the lead agency for the preparation of an EIS, the responsible official shall arrange through OER for the publication of the notice of intent in the FEDERAL REGISTER, distribute the notice of intent and arrange and conduct a scoping meeting as outlined in 40 CFR 1501.7.

(2) If the responsible official and the permit applicant agree to a third party method of EIS preparation, pursuant to §6.604(g)(3) of this part, the responsible official shall insure that a notice of intent is published and that a scoping meeting is held before the third party contractor begins work which may influence the scope of the EIS.

(g) *EIS method.* EPA shall prepare EISs by one of the following means:

(1) Directly by its own staff;

(2) By contracting directly with a qualified consulting firm; or

(3) By utilizing a third party method, whereby the responsible official enters into a *third party agreement* for the applicant to engage and pay for the services of a third party contractor to prepare the EIS. Such an agreement shall not be initiated unless both the applicant and the responsible official agree to its creation. A third party agreement will be established prior to the applicant's environmental information document and eliminate the need for that document. In proceeding under the third party agreement, the responsible official shall carry out the following practices:

(i) In consultation with the applicant, choose the third party contractor and manage that contract.

(ii) Select the consultant based on his ability and an absence of conflict of interest. Third party contractors will be required to execute a disclosure statement prepared by the responsible official signifying they have no financial or other conflicting interest in the outcome of the project.

(iii) Specify the information to be developed and supervise the gathering, analysis and presentation of the information. The responsible official shall have sole authority for approval and modification of the statements, analyses, and conclusions included in the third party EIS.

(h) *Documents for the administrative record.* Pursuant to 40 CFR 124.9(b)(6) and 124.18(b)(5) any environmental assessment, FNSI EIS, or supplement to an EIS shall be made a part of the administrative record related to permit issuance.

[44 FR 64177, Nov. 6, 1979, as amended at 47 FR 9831, Mar. 8, 1982]

§6.605 Criteria for preparing EISs.

(a) *General guidelines.* (1) When determining the significance of a proposed

new source's impact, the responsible official shall consider both its short term and long term effects as well as its direct and indirect effects and beneficial and adverse environmental impacts as defined in 40 CFR 1508.8.

(2) If EPA is proposing to issue a number of new source NPDES permits during a limited time span and in the same general geographic area, the responsible official shall examine the possibility of tiering EISs. If the permits are minor and environmentally insignificant when considered separately, the responsible official may determine that the cumulative impact of the issuance of all these permits may have a significant environmental effect and require an EIS for the area. Each separate decision to issue an NPDES permit shall then be based on the information in this areawide EIS. Site specific EISs may be required in certain circumstances in addition to the areawide EIS.

(b) *Specific criteria.* An EIS will be prepared when:

(1) The new source will induce or accelerate significant changes in industrial, commercial, agricultural, or residential land use concentrations or distributions which have the potential for significant environmental effects. Factors that should be considered in determining if these changes are environmentally significant include but are not limited to: The nature and extent of the vacant land subject to increased development pressure as a result of the new source; the increases in population or population density which may be induced and the ramifications of such changes; the nature of land use regulations in the affected area and their potential effects on development and the environment; and the changes in the availability or demand for energy and the resulting environmental consequences.

(2) The new source will directly, or through induced development, have significant adverse effect upon local ambient air quality, local ambient noise levels, floodplains, surface or groundwater quality or quantity, fish, wildlife, and their natural habitats.

(3) Any major part of the new source will have significant adverse effect on the habitat of threatened or endangered species on the Department of the Interior's or a State's lists of threatened and endangered species.

(4) The environmental impact of the issuance of a new source NPDES permit will have significant direct and adverse effect on a property listed in or eligible for listing in the National Register of Historic Places.

(5) Any major part of the source will have significant adverse effects on parklands, wetlands, wild and scenic rivers, reservoirs or other important bodies of water, navigation projects, or agricultural lands.

§ 6.606 Record of decision.

(a) *General.* At the time of permit award, the responsible official shall prepare a record of decision in those cases where a final EIS was issued in accordance with 40 CFR 1505.2 and pursuant to the provisions of the permit regulations under 40 CFR 124.15 and 124.18(b)(5). The record of decision shall list any mitigation measures necessary to make the recommended alternative environmentally acceptable.

(b) *Mitigation measures.* The mitigation measures derived from the EIS process shall be incorporated as conditions of the permit; ancillary agreements shall not be used to require mitigation.

[44 FR 64177, Nov. 6, 1979, as amended at 47 FR 9831, Mar. 8, 1982]

§ 6.607 Monitoring.

In accordance with 40 CFR 1505.3 and pursuant to 40 CFR 122.66(c) and 122.10 the responsible official shall ensure that there is adequate monitoring of compliance with all NEPA related requirements contained in the permit.

[47 FR 9831, Mar. 8, 1982]

Subpart G—Environmental Review Procedures for Office of Research and Development Projects

SOURCE: 56 FR 20543, May 6, 1991, unless otherwise noted.

§ 6.700 Purpose.

(a) This subpart amplifies the requirements described in subparts A

through D by providing specific environmental review procedures for activities undertaken or funded by the Office of Research and Development (ORD).

(b) The ORD Program provides scientific support for setting environmental standards as well as the technology needed to prevent, monitor and control pollution. Intramural research is conducted at EPA laboratories and field stations throughout the United States. Extramural research is implemented through grants, cooperative agreements, and contracts. The majority of ORD's research is conducted within the confines of laboratories. Outdoor research includes monitoring, sampling, and environmental stress and ecological effects studies.

§6.701 Definition.

The term *appropriate program* official means the official at each decision level within ORD to whom the Assistant Administrator has delegated responsibility for carrying out the environmental review process.

§6.702 Applicability.

The requirements of this subpart apply to administrative actions undertaken to approve intramural and extramural projects under the purview of ORD.

§6.703 General.

(a) *Environmental information.* (1) For intramural research projects, information necessary to perform the environmental review shall be obtained by the appropriate program official.

(2) For extramural research projects, environmental information documents shall be submitted to EPA by applicants to facilitate the Agency's environmental review process. Guidance on environmental information documents shall be included in all assistance application kits and in contract proposal instructions. If there is a question concerning the preparation of an environmental information document, the applicant should consult with the project officer or contract officer for guidance.

(b) *Environmental review.* The diagram in figure 1 represents the various stages of the environmental review process to be undertaken for ORD projects.

(1) For intramural research projects, an environmental review will be performed for each laboratory's projects at the start of the planning year. The review will be conducted before projects are incorporated into the ORD program planning system. Projects added at a later date and, therefore, not identified at the start of the planning year, or any redirection of a project that could have significant environmental effects, also will be subjected to an environmental review. This review will be performed in accordance with the process set forth in this subpart and depicted in figure 1.

(2) For extramural research projects, the environmental review shall be conducted before an initial or continuing award is made. The appropriate program official will perform the environmental review in accordance with the process set forth in this subpart and depicted in figure 1. EPA form 5300–23 will be used to document categorical exclusion determinations or, with appropriate supporting analysis, as the environmental assessment (EA). The completed form 5300–23 and any finding of no significant impact (FNSI) or environmental impact statement (EIS) will be submitted with the proposal package to the appropriate EPA assistance or contract office.

(c) *Agency coordination.* In order to avoid duplication of effort and ensure consistency throughout the Agency, environmental reviews of ORD projects will be coordinated, as appropriate and feasible, with reviews performed by other program offices. Technical support documents prepared for reviews in other EPA programs may be adopted for use in ORD's environmental reviews and supplemented, as appropriate.

§6.704 Categorical exclusions.

(a) At the beginning of the environmental review process (see Figure 1), the appropriate program official shall determine whether an ORD project can be categorically excluded from the substantive requirements of a NEPA review. This determination shall be based on general criteria in §6.107(d) and specialized categories of ORD actions eligible for exclusion in §6.704(b). If the

appropriate program official determines that an ORD project is consistent with the general criteria and any of the specialized categories of eligible activities, and does not satisfy the criteria in § 6.107(e) for not granting a categorical exclusion, then this finding shall be documented and no further action shall be required. A categorical exclusion shall be revoked by the appropriate program official if it is determined that the project meets the criteria for revocation in § 6.107(c). Projects that fail to qualify for categorical exclusion or for which categorical exclusion has been revoked must undergo full environmental review in accordance with § 6.705 and § 6.706.

(b) The following specialized categories of ORD actions are eligible for categorical exclusion from a detailed NEPA review:

(1) Library or literature searches and studies;

(2) Computer studies and activities;

(3) Monitoring and sample collection wherein no significant alteration of existing ambient conditions occurs;

(4) Projects conducted completely within a contained facility, such as a laboratory or other enclosed building, where methods are employed for appropriate disposal of laboratory wastes and safeguards exist against hazardous, toxic, and radioactive materials entering the environment. Laboratory directors or other appropriate officials must certify and provide documentation that the laboratory follows good laboratory practices and adheres to applicable federal statutes, regulations and guidelines.

§ 6.705 Environmental assessment and finding of no significant impact.

(a) When a project does not meet any of the criteria for categorical exclusion, the appropriate program official shall undertake an environmental assessment in accordance with 40 CFR 1508.9 in order to determine whether an EIS is required or if a FNSI can be made. ORD projects which normally result in the preparation of an EA include the following:

(1) Initial field demonstration of a new technology;

(2) Field trials of a new product or new uses of an existing technology;

(3) Alteration of a local habitat by physical or chemical means.

(b) If the environmental assessment reveals that the research is not anticipated to have a significant impact on the environment, the appropriate program official shall prepare a FNSI in accordance with § 6.105(f). Pursuant to § 6.400(d), no administrative action will be taken on a project until the prescribed 30-day comment period for a FNSI has elapsed and the Agency has fully considered all comments.

(c) On actions involving potentially significant impacts on the environment, a FNSI may be prepared if changes have been made in the proposed action to eliminate any significant impacts. These changes must be documented in the proposal and in the FNSI.

(d) If the environmental assessment reveals that the research may have a significant impact on the environment, an EIS must be prepared. The appropriate program official may make a determination that an EIS is necessary without preparing a formal environmental assessment. This determination may be made by applying the criteria for preparation of an EIS in § 6.706.

§ 6.706 Environmental impact statement.

(a) *Criteria for preparation*. In performing the environmental review, the appropriate program official shall assure that an EIS is prepared when any of the conditions under § 6.108 (a) through (g) exist or when:

(1) The proposed action may significantly affect the environment through the release of radioactive, hazardous or toxic substances;

(2) The proposed action, through the release of an organism or organisms, may involve environmental effects which are significant;

(3) The proposed action involves effects upon the environment which are likely to be highly controversial;

(4) The proposed action involves environmental effects which may accumulate over time or combine with effects of other actions to create impacts which are significant;

(5) The proposed action involves uncertain environmental effects or highly unique environmental risks which may be significant.

(b) *ORD actions which may require preparation of an EIS.* There are no ORD actions which normally require the preparation of an EIS. However, each ORD project will be evaluated using the EIS criteria as stated in § 6.706(a) to determine whether an EIS must be prepared.

(c) *Notice of intent.* (1) If the environmental review reveals that a proposed action may have a significant effect on the environment and this effect cannot be eliminated by redirection of the research or other means, the appropriate program official shall issue a notice of intent to prepare an EIS pursuant to § 6.400(b).

(2) As soon as possible after release of the notice of intent, the appropriate program official shall ensure that a draft EIS is prepared in accordance with subpart B and that the public is involved in accordance with subpart D.

(3) Draft and final EISs shall be sent to the Assistant Administrator for ORD for approval.

(4) Pursuant to § 6.401(b), a decision on whether to undertake or fund a project must be made in conformance with the time frames indicated.

(d) *Record of decision.* Before the project is undertaken or funded, the appropriate program official shall prepare, in accordance with § 6.105 (g) and (h), a record of decision in any case where a final EIS has been issued.

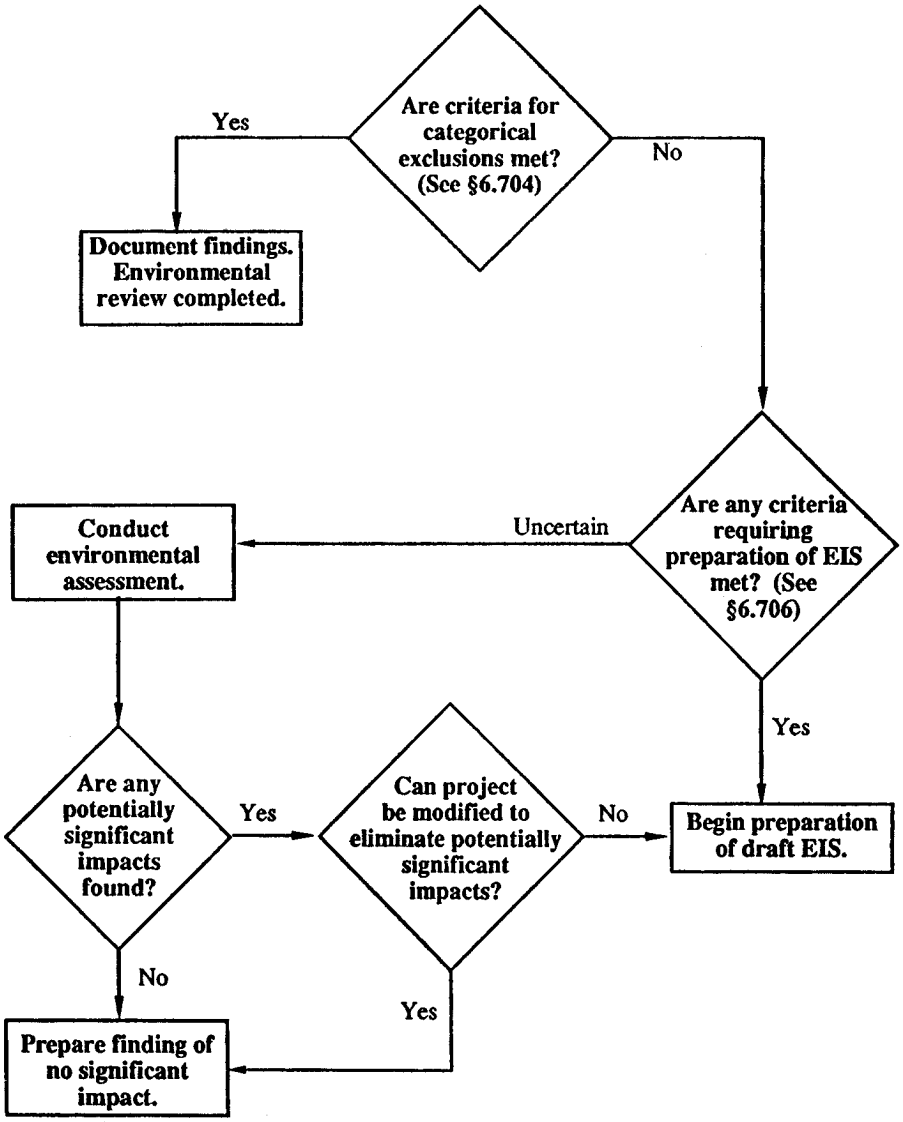

[FR Doc. 91-10609 Filed 5-3-91; 8:45 am]
BILLING CODE 6560-50-C

Subpart H—Environmental Review Procedures for Solid Waste Demonstration Projects

§6.800 Purpose.

This subpart amplifies the procedures described in subparts A through D by providing more specific environmental review procedures for demonstration projects undertaken by the Office of Solid Waste and Emergency Response.

[44 FR 64177, Nov. 6, 1979, as amended at 51 FR 32613, Sept. 12, 1986]

§6.801 Applicability.

The requirements of this subpart apply to solid waste demonstration projects for resource recovery systems and improved solid waste disposal facilities undertaken pursuant to section 8006 of the Resource Conservation and Recovery Act of 1976.

§6.802 Criteria for preparing EISs.

The responsible official shall assure that an EIS will be prepared when it is determined that any of the conditions in §6.108 exist.

[44 FR 64177, Nov. 6, 1979, as amended at 50 FR 26323, June 25, 1985]

§6.803 Environmental review process.

(a) *Environmental information.* (1) Environmental information documents shall be submitted to EPA by grant applicants or contractors. If there is a question concerning the need for a document, the potential contractor or grantee should consult with the appropriate project officer for the grant or contract.

(2) The environmental information document shall contain the same sections specified for EIS's in subpart B. Guidance alerting potential grantees and contractors of the environmental information documents shall be included in all grant application kits, attached to letters concerning the submission of unsolicited proposals, and included with all requests for proposal.

(b) *Environmental review.* An environmental review will be conducted before a grant or contract award is made. This review will include the preparation of an environmental assessment by the responsible official; the appropriate Regional Administrator's input will include his recommendations on the need for an EIS.

(c) *Notice of intent and EIS.* Based on the environmental review if the criteria in §6.802 of this part apply, the responsible official will assure that a notice of intent and a draft EIS are prepared. The responsible official may request the appropriate Regional Administrator to assist him in the preparation and distribution of the environmental documents.

(d) *Finding of no significant impact.* If the environmental review indicated no significant environmental impacts, the responsible official will assure that a FNSI is prepared which lists any mitigation measures necessary to make the recommended alternative environmentally acceptable.

(e) *Timing of action.* Pursuant to §6.401(b), in no case shall a contract or grant be awarded until the prescribed 30-day review period for a final EIS has elapsed. Similarly, no action shall be taken until the 30-day comment period for a FNSI is completed.

§6.804 Record of decision.

The responsible official shall prepare a record of decision in any case where final EIS has been issued in accordance with 40 CFR 1505.2. It shall be prepared at the time of contract or grant award. The record of decision shall list any mitigation measures necessary to make the recommended alternative environmentally acceptable.

Subpart I—Environmental Review Procedures for EPA Facility Support Activities

§6.900 Purpose.

This subpart amplifies the general requirements described in subparts A through D by providing environmental procedures for the preparation of EISs on construction and renovation of special purpose facilities.

§6.901 Definitions.

(a) The term *special purpose facility* means a building or space, including land incidental to its use, which is wholly or predominantly utilized for the special purpose of an agency and not generally suitable for other uses,

as determined by the General Services Administration.

(b) The term *program of requirements* means a comprehensive document (booklet) describing program activities to be accomplished in the new special purpose facility or improvement. It includes architectural, mechanical, structural, and space requirements.

(c) The term *scope of work* means a document similar in content to the program of requirements but substantially abbreviated. It is usually prepared for small-scale projects.

§ 6.902 Applicability.

(a) *Actions covered.* These procedures apply to all new special purpose facility construction, activities related to this construction (e.g., site acquisition and clearing), and any improvements or modifications to facilities having potential environmental effects external to the facility, including new construction and improvements undertaken and funded by the Facilities Engineering and Real Estate Branch, Facilities and Support Services Division, Office of the Assistant Administrator for Administration and Resource Management; or by a regional office .

(b) *Actions excluded.* This subpart does not apply to those activities of the Facilities Engineering and Real Estate Branch, Facilities and Support Services Division, for which the branch does not have full fiscal responsibility for the entire project. This includes pilot plant construction, land acquisition, site clearing and access road construction where the Facilities Engineering and Real Estate Branch's activity is only supporting a project financed by a program office. Responsibility for considering the environmental impacts of such projects rests with the office managing and funding the entire project. Other subparts of this regulation apply depending on the nature of the project.

[44 FR 64177, Nov. 6, 1979, as amended at 51 FR 32613, Sept. 12, 1986]

§ 6.903 Criteria for preparing EISs.

(a) *Preliminary information.* The responsible official shall request an environmental information document from a construction contractor or consulting architect/engineer employed by EPA if he is involved in the planning, construction or modification of special purpose facilities when his activities have potential environmental effects external to the facility. Such modifications include but are not limited to facility additions, changes in central heating systems or wastewater treatment systems, and land clearing for access roads and parking lots.

(b) *EIS preparation criteria.* The responsible official shall conduct an environmental review of all actions involving construction of special purpose facilities and improvements to these facilities. The responsible official shall assure that an EIS will be prepared when it is determined that any of the conditions in § 6.108 of this part exist.

[44 FR 64177, Nov. 6, 1979, as amended at 50 FR 26323, June 25, 1985]

§ 6.904 Environmental review process.

(a) *Environmental review.* (1) An environmental review shall be conducted when the program of requirements or scope of work has been completed for the construction, improvements, or modification of special purpose facilities. For special purpose facility construction, the Chief, Facilities Engineering and Real Estate Branch, shall request the assistance of the appropriate program office and Regional Administrator in the review. For modifications and improvement, the appropriate responsible official shall request assistance in making the review from other cognizant EPA offices.

(2) Any environmental information documents requested shall contain the same sections listed for EISs in subpart B. Contractors and consultants shall be notified in contractual documents when an environmental information document must be prepared.

(b) *Notice of intent, EIS, and FNSI.* The responsible official shall decide at the completion of the Environmental review whether there may be any significant environmental impacts. If there could be significant environmental impacts, a notice of intent and an EIS shall be prepared according to the procedures under subparts A, B, C and D. If there are not any significant environmental impacts, a FNSI shall be prepared according to the procedures in subparts A and D. The FNSI shall list

any mitigation measures necessary to make the recommended alternative environmentally acceptable.

(c) *Timing of action.* Pursuant to §6.401(b), in no case shall a contract be awarded or construction activities begun until the prescribed 30-day wait period for a final EIS has elapsed. Similarly, under §6.400(d), no action shall be taken until the 30-day comment period for FNSIs is completed.

§6.905 Record of decision.

At the time of contract award, the responsible official shall prepare a record of decision in those cases where a final EIS has been issued in accordance with 40 CFR 1505.2. The record of decision shall list any mitigation measures necessary to make the recommended alternative environmentally acceptable.

Subpart J—Assessing the Environmental Effects Abroad of EPA Actions

AUTHORITY: Executive Order 12114, 42 U.S.C. 4321, note.

SOURCE: 46 FR 3364, Jan. 14, 1981, unless otherwise noted.

§6.1001 Purpose and policy.

(a) *Purpose.* On January 4, 1979, the President signed Executive Order 12114 entitled ''Environmental Effects Abroad of Major Federal Actions.'' The purpose of this Executive Order is to enable responsible Federal officials in carrying out or approving major Federal actions which affect foreign nations or the global commons to be informed of pertinent environmental considerations and to consider fully the environmental impacts of the actions undertaken. While based on independent authority, this Order furthers the purpose of the National Environmental Policy Act (NEPA) (42 U.S.C. 4321 *et seq.*) and the Marine Protection Research and Sanctuaries Act (MPRSA) (33 U.S.C. 1401 *et seq.*). It should be noted, however, that in fulfilling its responsibilities under Executive Order 12114, EPA shall be guided by CEQ regulations only to the extent that they are made expressly applicable by this subpart. The procedures set forth below reflect EPA's duties and responsibilities as required under the Executive Order and satisfy the requirement for issuance of procedures under section 2–1 of the Executive Order.

(b) *Policy.* It shall be the policy of this Agency to carry out the purpose and requirements of the Executive Order to the fullest extent possible. EPA, within the realm of its expertise, shall work with the Department of State and the Council on Environmental Quality to provide information to other Federal agencies and foreign nations to heighten awareness of and interest in the environment. EPA shall further cooperate to the extent possible with Federal agencies to lend special expertise and assistance in the preparation of required environmental documents under the Executive Order. EPA shall perform environmental reviews of activities significantly affecting the global commons and foreign nations as required under Executive Order 12114 and as set forth under these procedures.

§6.1002 Applicability.

(a) Administrative actions requiring environmental review. The environmental review requirements apply to the activities of EPA as set forth below:

(1) Major research or demonstration projects which affect the global commons or a foreign nation.

(2) Ocean dumping activities carried out under section 102 of the MPRSA which affect the related environment.

(3) Major permitting or licensing by EPA of facilities which affect the global commons or the environment of a foreign nation. This may include such actions as the issuance by EPA of hazardous waste treatment, storage, or disposal facility permits pursuant to section 3005 of the Resource Conservation and Recovery Act (42 U.S.C. 6925), NPDES permits pursuant to section 402 of the Clean Water Act (33 U.S.C. 1342), and prevention of significant deterioration approvals pursuant to Part C of the Clean Air Act (42 U.S.C. 7470 *et seq.*).

(4) Wastewater Treatment Construction Grants Program under section 201 of the Clean Water Act when activities

addressed in the facility plan would have environmental effects abroad.

(5) Other EPA activities as determined by OER and OIA (see § 6.1007(c)).

§ 6.1003 Definitions.

As used in this subpart, *environment* means the natural and physical environment and excludes social, economic and other environments; *global commons* is that area (land, air, water) outside the jurisdiction of any nation; and *responsible official* is either the EPA Assistant Administrator or Regional Administrator as appropriate for the particular EPA program. Also, an action *significantly* affects the environment if it does *significant* harm to the environment even though on balance the action may be beneficial to the environment. To the extent applicable, the responsible official shall address the considerations set forth in the CEQ Regulations under 40 CFR 1508.27 in determining significant effect.

§ 6.1004 Environmental review and assessment requirements.

(a) *Research and demonstration projects.* The appropriate Assistant Administrator is responsible for performing the necessary degree of environmental review on research and demonstration projects undertaken by EPA. If the research or demonstration project affects the environment of the global commons, the applicant shall prepare an environmental analysis. This will assist the responsible official in determining whether an EIS is necessary. If it is determined that the action significantly affects the environment of the global commons, then an EIS shall be prepared. If the undertaking significantly affects a foreign nation EPA shall prepare a unilateral, bilateral or multilateral environmental study. EPA shall afford the affected foreign nation or international body or organization an opportunity to participate in this study. This environmental study shall discuss the need for the action, analyze the environmental impact of the various alternatives considered and list the agencies and other parties consulted.

(b) *Ocean dumping activities.* (1) The Assistant Administrator for Water and Waste Management shall ensure the preparation of appropriate environmental documents relating to ocean dumping activities in the global commons under section 102 of the MPRSA. For ocean dumping site designations prescribed pursuant to section 102(c) of the MPRSA and 40 CFR part 228, EPA shall prepare an environmental impact statement consistent with the requirements of EPA's Procedures for the Voluntary Preparation of Environmental Impact Statements dated October 21, 1974 (see 39 FR 37419). Also EPA shall prepare an environmental impact statement for the establishment or revision of criteria under section 102(a) of MPRSA.

(2) For individual permits issued by EPA under section 102(b) an environmental assessment shall be made by EPA. Pursuant to 40 CFR part 221, the permit applicant shall submit with the application an environmental analysis which includes a discussion of the need for the action, an outline of alternatives, and an analysis of the environmental impact of the proposed action and alternatives consistent with the EPA criteria established under section 102(a) of MPRSA. The information submitted under 40 CFR part 221 shall be sufficient to satisfy the environmental assessment requirement.

(c) *EPA permitting and licensing activities.* The appropriate Regional Administrator is responsible for conducting concise environmental reviews with regard to permits issued under section 3005 of the Resource Conservation and Recovery Act (RCRA permits), section 402 of the Clean Water Act (NPDES permits), and section 165 of the Clean Air Act (PSD permits), for such actions undertaken by EPA which affect the global commons or foreign nations. The information submitted by applicants for such permits or approvals under the applicable consolidated permit regulations (40 CFR parts 122 and 124) and Prevention of Significant Deterioration (PSD) regulations (40 CFR part 52) shall satisfy the environmental document requirement under section 2–4(b) of Executive Order 12114. Compliance with applicable requirements in part 124 of the consolidated permit regulations (40 CFR part 124) shall be sufficient to satisfy the requirements to

conduct a concise environmental review for permits subject to this paragraph.

(d) *Wastewater treatment facility planning.* 40 CFR 6.506 details the environmental review process for the facilities planning process under the wastewater treatment works construction grants program. For the purpose of these regulations, the facility plan shall also include a concise environmental review of those activities that would have environmental effects abroad. This shall apply only to the Step 1 grants awarded after January 14, 1981, but on or before December 29, 1981, and facilities plans developed after December 29, 1981. Where water quality impacts identified in a facility plan are the subject or water quality agreements with Canada or Mexico, nothing in these regulations shall impose on the facility planning process coordination and consultation requirements in addition to those required by such agreements.

(e) *Review by other Federal agencies and other appropriate officials.* The responsible officials shall consult with other Federal agencies with relevant expertise during the preparation of the environmental document. As soon as feasible after preparation of the environmental document, the responsible official shall make the document available to the Council on Environmental Quality, Department of State, and other appropriate officials. The responsible official with assistance from OIA shall work with the Department of State to establish procedures for communicating with and making documents available to foreign nations and international organizations.

[46 FR 3364, Jan. 14, 1981, as amended at 50 FR 26323, June 25, 1985]

§6.1005 Lead or cooperating agency.

(a) *Lead Agency.* Section 3–3 of Executive Order 12114 requires the creation of a lead agency whenever an action involves more than one federal agency. In implementing section 3–3, EPA shall, to the fullest extent possible, follow the guidance for the selection of a lead agency contained in 40 CFR 1501.5 of the CEQ regulations.

(b) *Cooperating Agency.* Under section 2–4(d) of the Executive Order, Federal agencies with special expertise are encouraged to provide appropriate resources to the agency preparing environmental documents in order to avoid duplication of resources. In working with a lead agency, EPA shall to the fullest extent possible serve as a cooperating agency in accordance with 40 CFR 1501.6. When other program commitments preclude the degree of involvement requested by the lead agency, the responsible EPA official shall so inform the lead agency in writing.

§6.1006 Exemptions and considerations.

Under section 2–5 (b) and (c) of the Executive Order, Federal agencies may provide for modifications in the contents, timing and availability of documents or exemptions from certain requirements for the environmental review and assessment. The responsible official, in consultation with the Director, Office of Environmental Review (OER), and the Director, Office of International Activities (OIA), may approve modifications for situations described in section 2–5(b). The responsible official, in consultation with the Director, OER and Director OIA, shall obtain exemptions from the Administrator for situations described in section 2–5(c). The Department of State and the Council on Environmental Quality shall be consulted as soon as possible on the utilization of such exemptions.

§6.1007 Implementation.

(a) *Oversight.* OER is responsible for overseeing the implementation of these procedures and shall consult with OIA wherever appropriate. OIA shall be utilized for making formal contacts with the Department of State. OER shall assist the responsible officials in carrying out their responsibilities under these procedures.

(b) *Information exchange.* OER with the aid of OIA, shall assist the Department of State and the Council on Environmental Quality in developing the informational exchange on environmental review activities with foreign nations.

(c) *Unidentified activities.* The responsible official shall consult with OER

and OIA to establish the type of environmental review or document appropriate for any new EPA activities or requirements imposed upon EPA by statute, international agreement or other agreements.

APPENDIX A—STATEMENT OF PROCEDURES ON FLOODPLAIN MANAGEMENT AND WETLANDS PROTECTION

Contents:

Section 1 General
Section 2 Purpose
Section 3 Policy
Section 4 Definitions
Section 5 Applicability
Section 6 Requirements
Section 7 Implementation

Section 1 General

a. Executive Order 11988 entitled ''Floodplain Management'' dated May 24, 1977, requires Federal agencies to evaluate the potential effects of actions it may take in a floodplain to avoid adversely impacting floodplains wherever possible, to ensure that its planning programs and budget requests reflect consideration of flood hazards and floodplain management, including the restoration and preservation of such land areas as natural undeveloped floodplains, and to prescribe procedures to implement the policies and procedures of this Executive Order. Guidance for implementation of the Executive Order has been provided by the U.S. Water Resources Council in its Floodplain Management Guidelines dated February 10, 1978 (see 40 FR 6030).

b. Executive Order 11990 entitled ''Protection of Wetlands'', dated May 24, 1977, requires Federal agencies to take action to avoid adversely impacting wetlands wherever possible, to minimize wetlands destruction and to preserve the values of wetlands, and to prescribe procedures to implement the policies and procedures of this Executive Order.

c. It is the intent of these Executive Orders that, wherever possible, Federal agencies implement the floodplains/wetlands requirements through existing procedures, such as those internal procedures established to implement the National Environmental Policy Act (NEPA) and OMB A–95 review procedures. In those instances where the environmental impacts of a proposed action are not significant enough to require an environmental impact statement (EIS) pursuant to section 102(2)(C) of NEPA, or where programs are not subject to the requirements of NEPA, alternative but equivalent floodplain/wetlands evaluation and notice procedures must be established.

Section 2 Purpose

a. The purpose of this Statement of Procedures is to set forth Agency policy and guidance for carrying out the provisions of Executive Orders 11988 and 11990.

b. EPA program offices shall amend existing regulations and procedures to incorporate the policies and procedures set forth in this Statement of Procedures.

c. To the extent possible, EPA shall accommodate the requirements of Executive Orders 11988 and 11990 through the Agency NEPA procedures contained in 40 CFR part 6.

Section 3 Policy

a. The Agency shall avoid wherever possible the long and short term impacts associated with the destruction of wetlands and the occupancy and modification of floodplains and wetlands, and avoid direct and indirect support of floodplain and wetlands development wherever there is a practicable alternative.

b. The Agency shall incorporate floodplain management goals and wetlands protection considerations into its planning, regulatory, and decisionmaking processes. It shall also promote the preservation and restoration of floodplains so that their natural and beneficial values can be realized. To the extent possible EPA shall:

(1) Reduce the hazard and risk of flood loss and wherever it is possible to avoid direct or indirect adverse impact on floodplains;

(2) Where there is no practical alternative to locating in a floodplain, minimize the impact of floods on human safety, health, and welfare, as well as the natural environment;

(3) Restore and preserve natural and beneficial values served by floodplains;

(4) Require the construction of EPA structures and facilities to be in accordance with the standards and criteria, of the regulations promulgated pursuant to the National Flood Insurance Program;

(5) Identify floodplains which require restoration and preservation and recommend management programs necessary to protect these floodplains and to include such considerations as part of on-going planning programs; and

(6) Provide the public with early and continuing information concerning floodplain management and with opportunities for participating in decision making including the (evaluation of) tradeoffs among competing alternatives.

c. The Agency shall incorporate wetlands protection considerations into its planning, regulatory, and decisionmaking processes. It shall minimize the destruction, loss, or degradation of wetlands and preserve and enhance the natural and beneficial values of wetlands. Agency activities shall continue to

be carried out consistent with the Administrator's Decision Statement No. 4 dated February 21, 1973 entitled ''EPA Policy to Protect the Nation's Wetlands.''

Section 4 Definitions

a. *Base Flood* means that flood which has a one percent chance of occurrence in any given year (also known as a 100-year flood). This term is used in the National Flood Insurance Program (NFIP) to indicate the minimum level of flooding to be used by a community in its floodplain management regulations.

b. *Base Floodplain* means the land area covered by a 100-year flood (one percent chance floodplain). Also see definition of floodplain.

c. *Flood or Flooding* means a general and temporary condition of partial or complete inundation of normally dry land areas from the overflow of inland and/or tidal waters, and/or the unusual and rapid accumulation or runoff of surface waters from any source, or flooding from any other source.

d. *Floodplain* means the lowland and relatively flat areas adjoining inland and coastal waters and other floodprone areas such as offshore islands, including at a minimum, that area subject to a one percent or greater chance of flooding in any given year. The base floodplain shall be used to designate the 100-year floodplain (one percent chance floodplain). The critical action floodplain is defined as the 500-year floodplain (0.2 percent chance floodplain).

e. *Floodproofing* means modification of individual structures and facilities, their sites, and their contents to protect against structural failure, to keep water out or to reduce effects of water entry.

f. *Minimize* means to reduce to the smallest possible amount or degree.

g. *Practicable* means capable of being done within existing constraints. The test of what is practicable depends upon the situation and includes consideration of the pertinent factors such as environment, community welfare, cost, or technology.

h. *Preserve* means to prevent modification to the natural floodplain environment or to maintain it as closely as possible to its natural state.

i. *Restore* means to re-establish a setting or environment in which the natural functions of the floodplain can again operate.

j. *Wetlands* means those areas that are inundated by surface or ground water with a frequency sufficient to support and under normal circumstances does or would support a prevalence of vegetative or aquatic life that requires saturated or seasonally saturated soil conditions for growth and reproduction. Wetlands generally include swamps, marshes, bogs, and similar areas such as sloughs, potholes, wet meadows, river overflows, mud flats, and natural ponds.

Section 5 Applicability

a. The Executive Orders apply to activities of Federal agencies pertaining to (1) acquiring, managing, and disposing of Federal lands and facilities, (2) providing Federally undertaken, financed, or assisted construction and improvements, and (3) conducting Federal activities and programs affecting land use, including but not limited to water and related land resources planning, regulating, and licensing activities.

b. These procedures shall apply to EPA's programs as follows: (1) All Agency actions involving construction of facilities or management of lands or property. This will require amendment of the EPA Facilities Management Manual (October 1973 and revisions thereafter).

(2) All Agency actions where the NEPA process applies. This would include the programs under sections 306/402 of the Clean Water Act pertaining to new source permitting and section 201 of the Clean Water Act pertaining to wastewater treatment construction grants.

(3) All agency actions where there is sufficient independent statutory authority to carry out the floodplain/wetlands procedures.

(4) In program areas where there is no EIS requirement nor clear statutory authority for EPA to require procedural implementation, EPA shall continue to provide leadership and offer guidance so that the value of floodplain management and wetlands protection can be understood and carried out to the maximum extent practicable in these programs.

c. These procedures shall not apply to any permitting or source review programs of EPA once such authority has been transferred or delegated to a State. However, EPA shall, to the extent possible, require States to provide equivalent effort to assure support for the objectives of these procedures as part of the state assumption process.

Section 6 Requirements

a. Floodplain/Wetlands review of proposed Agency actions.

(1) *Floodplain/Wetlands Determination*—Before undertaking an Agency action, each program office must determine whether or not the action will be located in or affect a floodplain or wetlands. The Agency shall utilize maps prepared by the Federal Insurance Administration of the Federal Emergency Management Agency (Flood Insurance Rate Maps or Flood Hazard Boundary Maps), Fish and Wildlife Service (National Wetlands Inventory Maps), and other appropriate agencies to determine whether a proposed action is located in or will likely affect a floodplain or wetlands. If there is no floodplain/wetlands impact identified, the action may proceed without further consideration of the remaining procedures set forth below.

(2) *Early Public Notice*—When it is apparent that a proposed or potential agency action is likely to impact a floodplain or wetlands, the public should be informed through appropriate public notice procedures.

(3) *Floodplain/Wetlands Assessment*—If the Agency determines a proposed action is located in or affects a floodplain or wetlands, a floodplain/wetlands assessment shall be undertaken. For those actions where an environmental assessment (EA) or environmental impact statement (EIS) is prepared pursuant to 40 CFR part 6, the floodplain/wetlands assessment shall be prepared concurrently with these analyses and shall be included in the EA or EIS. In all other cases, a *floodplain/wetlands assessment* shall be prepared. Assessments shall consist of a description of the proposed action, a discussion of its effect on the floodplain/wetlands, and shall also describe the alternatives considered.

(4) *Public Review of Assessments*—For proposed actions impacting floodplain/wetlands where an EA or EIS is prepared, the opportunity for public review will be provided through the EIS provisions contained in 40 CFR parts 6, 25, or 35, where appropriate. In other cases, an equivalent public notice of the floodplain/wetlands assessment shall be made consistent with the public involvement requirements of the applicable program.

(5) *Minimize, Restore or Preserve*—If there is no practicable alternative to locating in or affecting the floodplain or wetlands, the Agency shall act to minimize potential harm to the floodplain or wetlands. The Agency shall also act to restore and preserve the natural and beneficial values of floodplains and wetlands as part of the analysis of all alternatives under consideration.

(6) *Agency Decision*—After consideration of alternative actions, as they have been modified in the preceding analysis, the Agency shall select the desired alternative. For all Agency actions proposed to be in or affecting a floodplain/wetlands, the Agency shall provide further public notice announcing this decision. This decision shall be accompanied by a Statement of Findings, not to exceed three pages. This Statement shall include: (i) The reasons why the proposed action must be located in or affect the floodplain or wetlands; (ii) a description of significant facts considered in making the decision to locate in or affect the floodplain or wetlands including alternative sites and actions; (iii) a statement indicating whether the proposed action conforms to applicable State or local floodplain protection standards; (iv) a description of the steps taken to design or modify the proposed action to minimize potential harm to or within the floodplain or wetlands; and (v) a statement indicating how the proposed action affects the natural or beneficial values of the floodplain or wetlands. If the provisions of 40 CFR part 6 apply, the Statement of Findings may be incorporated in the final EIS or in the environmental assessment. In other cases, notice should be placed in the FEDERAL REGISTER or other local medium and copies sent to Federal, State, and local agencies and other entities which submitted comments or are otherwise concerned with the floodplain/wetlands assessment. For floodplain actions subject to Office of Management and Budget (OMB) Circular A–95, the Agency shall send the Statement of Findings to State and areawide A–95 clearinghouse in the geographic area affected. At least 15 working days shall be allowed for public and interagency review of the Statement of Findings.

(7) *Authorizations/Appropriations*—Any requests for new authorizations or appropriations transmitted to OMB shall include, a floodplain/wetlands assessment and, for floodplain impacting actions, a Statement of Findings, if a proposed action will be located in a floodplain or wetlands.

b. *Lead agency concept.* To the maximum extent possible, the Agency shall relay on the lead agency concept to carry out the provisions set forth in section 6.a of this appendix. Therefore, when EPA and another Federal agency have related actions, EPA shall work with the other agency to identify which agency shall take the lead in satisfying these procedural requirements and thereby avoid duplication of efforts.

c. *Additional floodplain management provisions relating to Federal property and facilities.*

(1) *Construction Activities*—EPA controlled structures and facilities must be constructed in accordance with existing criteria and standards set forth under the NFIP and must include mitigation of adverse impacts wherever feasible. Deviation from these requirements may occur only to the extent NFIP standards are demonstrated as inappropriate for a given structure or facility.

(2) *Flood Protection Measures*—If newly constructed structures or facilities are to be located in a floodplain, accepted floodproofing and other flood protection measures shall be undertaken. To achieve flood protection, EPA shall, wherever practicable, elevate structures above the base flood level rather than filling land.

(3) *Restoration and Preservation*—As part of any EPA plan or action, the potential for restoring and preserving floodplains and wetlands so that their natural and beneficial values can be realized must be considered and incorporated into the plan or action wherever feasible.

(4) *Property Used by Public*—If property used by the public has suffered damage or is located in an identified flood hazard area, EPA shall provide on structures, and other places where appropriate, conspicuous indicators of past and probable flood height to enhance public knowledge of flood hazards.

(5) *Transfer of EPA Property*—When property in flood plains is proposed for lease, easement, right-of-way, or disposal to non-Federal public or private parties, EPA shall reference in the conveyance those uses that are restricted under Federal, State and local floodplain regulations and attach other restrictions to uses of the property as may be deemed appropriate. Notwithstanding, EPA shall consider withholding such properties from conveyance.

Section 7 Implementation

a. Pursuant to section 2, the EPA program offices shall amend existing regulations, procedures, and guidance, as appropriate, to incorporate the policies and procedures set forth in this Statement of Procedures. Such amendments shall be made within six months of the date of these Procedures.

b. The Office of External Affairs (OEA) is responsible for the oversight of the implementation of this Statement of Procedures and shall be given advanced opportunity to review amendments to regulations, procedures, and guidance. OEA shall coordinate efforts with the program offices to develop necessary manuals and more specialized supplementary guidance to carry out this Statement of Procedures.

[44 FR 64177, Nov. 6, 1976, as amended at 50 FR 26323, June 25, 1985]

PART 7—NONDISCRIMINATION IN PROGRAMS RECEIVING FEDERAL ASSISTANCE FROM THE ENVIRONMENTAL PROTECTION AGENCY

Subpart A—General

Sec.
7.10 Purpose of this part.
7.15 Applicability.
7.20 Responsible agency officers.
7.25 Definitions.

Subpart B—Discrimination Prohibited on the Basis of Race, Color, National Origin or Sex

7.30 General prohibition.
7.35 Specific prohibitions.

Subpart C—Discrimination Prohibited on the Basis of Handicap

7.45 General prohibition.
7.50 Specific prohibitions against discrimination.
7.55 Separate or different programs.
7.60 Prohibitions and requirements relating to employment.
7.65 Accessibility.
7.70 New construction.
7.75 Transition plan.

Subpart D—Requirements for Applicants and Recipients

7.80 Applicants.
7.85 Recipients.
7.90 Grievance procedures.
7.95 Notice of nondiscrimination.
7.100 Intimidation and retaliation prohibited.

Subpart E—Agency Compliance Procedures

7.105 General policy.
7.110 Preaward compliance.
7.115 Postaward compliance.
7.120 Complaint investigations.
7.125 Coordination with other agencies.
7.130 Actions available to EPA to obtain compliance.
7.135 Procedure for regaining eligibility.
APPENDIX A TO PART 7—EPA ASSISTANCE PROGRAMS AS LISTED IN THE ''CATALOG OF FEDERAL DOMESTIC ASSISTANCE''

AUTHORITY: 42 U.S.C. 2000d to 2000d–4; 29 U.S.C. 794; 33 U.S.C. 1251 nt.

SOURCE: 49 FR 1659, Jan. 12, 1984, unless otherwise noted.

Subpart A—General

§7.10 Purpose of this part.

This part implements: Title VI of the Civil Rights Act of 1964, as amended; section 504 of the Rehabilitation Act of 1973, as amended; and section 13 of the Federal Water Pollution Control Act Amendments of 1972, Public Law 92–500, (collectively, the Acts).

§7.15 Applicability.

This part applies to all applicants for, and recipients of, EPA assistance in the operation of programs or activities receiving such assistance beginning February 13, 1984. New construction (§7.70) for which design was initiated prior to February 13, 1984, shall comply with the accessibility requirements in the Department of Health, Education and Welfare (now the Department of Health and Human Services) nondiscrimination regulation, 45 CFR 84.23, issued June 3, 1977, or with equivalent standards that ensure the facility is readily accessible to and usable by handicapped persons. Such assistance includes but is not limited to that which is listed in the *Catalogue of Federal Domestic Assistance* under the

66.000 series. It supersedes the provisions of former 40 CFR parts 7 and 12.

§ 7.20 Responsible agency officers.

(a) The EPA Office of Civil Rights (OCR) is responsible for developing and administering EPA's compliance programs under the Acts.

(b) EPA's Project Officers will, to the extent possible, be available to explain to each recipient its obligations under this part and to provide recipients with technical assistance or guidance upon request.

§ 7.25 Definitions.

As used in this part:

Administrator means the Administrator of EPA. It includes any other agency official authorized to act on his or her behalf, unless explicity stated otherwise.

Alcohol abuse means any misuse of alcohol which demonstrably interferes with a person's health, interpersonal relations or working ability.

Applicant means any entity that files an application or unsolicited proposal or otherwise requests EPA assistance (see definition for *EPA assistance*).

Assistant Attorney General is the head of the Civil Rights Division, U.S. Department of Justice.

Award Official means the EPA official with the authority to approve and execute assistance agreements and to take other assistance related actions authorized by this part and by other EPA regulations or delegation of authority.

Drug abuse means:

(a) The use of any drug or substance listed by the Department of Justice in 21 CFR 1308.11, under authority of the Controlled Substances Act, 21 U.S.C. 801, as a controlled substance unavailable for prescription because:

(1) The drug or substance has a high potential for abuse,

(2) The drug or other substance has no currently accepted medical use in treatment in the United States, or

(3) There is a lack of accepted safety for use of the drug or other substance under medical supervision.

NOTE: Examples of drugs under paragraph (a)(1) of this section include certain opiates and opiate derivatives (*e.g.*, heroin) and hallucinogenic substances (*e.g.*, marijuana, mescaline, peyote) and depressants (*e.g.*, methaqualone). Examples of (a)(2) include opium, coca leaves, methadone, amphetamines and barbiturates.

(b) The misuse of any drug or substance listed by the Department of Justice in 21 CFR 1308.12–1308.15 under authority of the Controlled Substances Act as a controlled substance available for prescription.

EPA means the United States Environmental Protection Agency.

EPA assistance means any grant or cooperative agreement, loan, contract (other than a procurement contract or a contract of insurance or guaranty), or any other arrangement by which EPA provides or otherwise makes available assistance in the form of:

(1) Funds;

(2) Services of personnel; or

(3) Real or personal property or any interest in or use of such property, including:

(i) Transfers or leases of such property for less than fair market value or for reduced consideration; and

(ii) Proceeds from a subsequent transfer or lease of such property if EPA's share of its fair market value is not returned to EPA.

Facility means all, or any part of, or any interests in structures, equipment, roads, walks, parking lots, or other real or personal property.

Handicapped person:

(a) *Handicapped person* means any person who (1) has a physical or mental impairment which substantially limits one or more major life activities, (2) has a record of such an impairment, or (3) is regarded as having such an impairment. For purposes of employment, the term *handicapped person* does not include any person who is an alcoholic or drug abuser whose current use of alcohol or drugs prevents such individual from performing the duties of the job in question or whose employment, by reason of such current drug or alcohol abuse, would constitute a direct threat to property or the safety of others.

(b) As used in this paragraph, the phrase:

(1) *Physical or mental impairment* means (i) any physiological disorder or condition, cosmetic disfigurement, or anatomical loss affecting one or more of the following body systems: Neurological; musculoskeletal; special sense

organs; respiratory, including speech organs; cardiovascular; reproductive; digestive; genito-urinary; hemic and lymphatic; skin; and endocrine; and (ii) any mental or psychological disorder, such as mental retardation, organic brain syndrome, emotional or mental illness, and specific learning disabilities.

(2) *Major life activities* means functions such as caring for one's self, performing manual tasks, walking, seeing, hearing, speaking, breathing, learning, and working.

(3) *Has a record of such an impairment* means has a history of, or has been misclassified as having, a mental or physical impairment that substantially limits one or more major life activities.

(4) *Is regarded as having an impairment* means:

(i) Has a physical or mental impairment that does not substantially limit major life activities but that is treated by a recipient as constituting such a limitation;

(ii) Has a physical or mental impairment that substantially limits major life activities only as a result of the attitudes of others toward such impairment; or

(iii) Has none of the impairments defined above but is treated by a recipient as having such an impairment.

Office of Civil Rights or OCR means the Director of the Office of Civil Rights, EPA Headquarters or his/her designated representative.

Project Officer means the EPA official designated in the assistance agreement (as defined in *EPA assistance*) as EPA's program contact with the recipient; Project Officers are responsible for monitoring the project.

Qualified handicapped person means:

(a) With respect to employment: A handicapped person who, with reasonable accommodation, can perform the essential functions of the job in question.

(b) With respect to services: A handicapped person who meets the essential eligibility requirements for the receipt of such services.

Racial classifications:[1]

(a) *American Indian or Alaskan native.* A person having origins in any of the original peoples of North America, and who maintains cultural identification through tribal affiliation or community recognition.

(b) *Asian or Pacific Islander.* A person having origins in any of the original peoples of the Far East, Southeast Asia, the Indian subcontinent, or the Pacific Islands. This area includes, for example, China, Japan, Korea, the Philippine Islands, and Samoa.

(c) *Black and not of Hispanic origin.* A person having origins in any of the black racial groups of Africa.

(d) *Hispanic.* A person of Mexican, Puerto Rican, Cuban, Central or South American or other Spanish culture or origin, regardless or race.

(e) *White, not of Hispanic origin.* A person having origins in any of the original peoples of Europe, North Africa, or the Middle East.

Recipient means, for the purposes of this regulation, any state or its political subdivision, any instrumentality of a state or its political subdivision, any public or private agency, institution, organization, or other entity, or any person to which Federal financial assistance is extended directly or through another recipient, including any successor, assignee, or transferee of a recipient, but excluding the ultimate beneficiary of the assistance.

Section 13 refers to section 13 of the Federal Water Pollution Control Act Amendments of 1972.

United States includes the states of the United States, the District of Columbia, the Commonwealth of Puerto Rico, the Virgin Islands, American Samoa, Guam, Wake Island, the Canal Zone, and all other territories and possessions of the United States; the term *State* includes any one of the foregoing.

---

[1] Additional subcategories based on national origin or primary language spoken may be used where appropriate on either a national or a regional basis. Subparagraphs (a) through (e) are in conformity with Directive 15 of the Office of Federal Statistical Policy and Standards, whose function is now in the Office of Information and Regulatory Affairs, Office of Management and Budget. Should that office, or any successor office, change or otherwise amend the categories listed in Directive 15, the categories in this paragraph shall be interpreted to conform with any such changes or amendments.

Subpart B—Discrimination Prohibited on the Basis of Race, Color, National Origin or Sex

§ 7.30 General prohibition.

No person shall be excluded from participation in, be denied the benefits of, or be subjected to discrimination under any program or activity receiving EPA assistance on the basis of race, color, national origin, or on the basis of sex in any program or activity receiving EPA assistance under the Federal Water Pollution Control Act, as amended, including the Environmental Financing Act of 1972.

§ 7.35 Specific prohibitions.

(a) As to any program or activity receiving EPA assistance, a recipient shall not directly or through contractual, licensing, or other arrangements on the basis of race, color, national origin or, if applicable, sex:

(1) Deny a person any service, aid or other benefit of the program;

(2) Provide a person any service, aid or other benefit that is different, or is provided differently from that provided to others under the program;

(3) Restrict a person in any way in the enjoyment of any advantage or privilege enjoyed by others receiving any service, aid, or benefit provided by the program;

(4) Subject a person to segregation in any manner or separate treatment in any way related to receiving services or benefits under the program;

(5) Deny a person or any group of persons the opportunity to participate as members of any planning or advisory body which is an integral part of the program, such as a local sanitation board or sewer authority;

(6) Discriminate in employment on the basis of sex in any program subject to section 13, or on the basis of race, color, or national origin in any program whose purpose is to create employment; or, by means of employment discrimination, deny intended beneficiaries the benefits of the EPA assistance program, or subject the beneficiaries to prohibited discrimination.

(7) In administering a program or activity receiving Federal financial assistance in which the recipient has previously discriminated on the basis of race, color, sex, or national origin, the recipient shall take affirmative action to provide remedies to those who have been injured by the discrimination.

(b) A recipient shall not use criteria or methods of administering its program which have the effect of subjecting individuals to discrimination because of their race, color, national origin, or sex, or have the effect of defeating or substantially impairing accomplishment of the objectives of the program with respect to individuals of a particular race, color, national origin, or sex.

(c) A recipient shall not choose a site or location of a facility that has the purpose or effect of excluding individuals from, denying them the benefits of, or subjecting them to discrimination under any program to which this part applies on the grounds of race, color, or national origin or sex; or with the purpose or effect of defeating or substantially impairing the accomplishment of the objectives of this subpart.

(d) The specific prohibitions of discrimination enumerated above do not limit the general prohibition of § 7.30.

Subpart C—Discrimination Prohibited on the Basis of Handicap

§ 7.45 General prohibition.

No qualified handicapped person shall solely on the basis of handicap be excluded from participation in, be denied the benefits of, or otherwise be subjected to discrimination under any program or activity receiving EPA assistance.

§ 7.50 Specific prohibitions against discrimination.

(a) A recipient, in providing any aid, benefit or service under any program or activity receiving EPA assistance shall not, on the basis of handicap, directly or through contractual, licensing, or other arrangement:

(1) Deny a qualified handicapped person any service, aid or other benefit of a federally assisted program;

(2) Provide different or separate aids, benefits, or services to handicapped persons or to any class of handicapped persons than is provided to others unless the action is necessary to provide

qualified handicapped persons with aids, benefits, or services that are as effective as those provided to others;

(3) Aid or perpetuate discrimination against a qualified handicapped person by providing significant assistance to an entity that discriminates on the basis of handicap in providing aids, benefits, or services to beneficiaries of the recipient's program;

(4) Deny a qualified handicapped person the opportunity to participate as a member of planning or advisory boards; or

(5) Limit a qualified handicapped person in any other way in the enjoyment of any right, privilege, advantage, or opportunity enjoyed by others receiving an aid, benefit or service from the program.

(b) A recipient may not, in determining the site or location of a facility, make selections: (1) That have the effect of excluding handicapped persons from, denying them the benefits of, or otherwise subjecting them to discrimination under any program or activity that receives or benefits from EPA assistance or (2) that have the purpose or effect of defeating or substantially impairing the accomplishment of the objectives of the program or activity receiving EPA assistance with respect to handicapped persons.

(c) A recipient shall not use criteria or methods of administering any program or activity receiving EPA assistance which have the effect of subjecting individuals to discrimination because of their handicap, or have the effect of defeating or substantially impairing accomplishment of the objectives of such program or activity with respect to handicapped persons.

(d) Recipients shall take appropriate steps to ensure that communications with their applicants, employees, and beneficiaries are available to persons with impaired vision and hearing.

(e) The exclusion of non-handicapped persons or specified classes of handicapped persons from programs limited by Federal statute or Executive Order to handicapped persons or a different class of handicapped persons is not prohibited by this subpart.

§7.55 Separate or different programs.

Recipients shall not deny a qualified handicapped person an opportunity equal to that afforded others to participate in or benefit from the aid, benefit, or service in the program receiving EPA assistance. Recipients shall administer programs in the most integrated setting appropriate to the needs of qualified handicapped persons.

§7.60 Prohibitions and requirements relating to employment.

(a) No qualified handicapped person shall, on the basis of handicap, be subjected to discrimination in employment under any program or activity that receives or benefits from Federal assistance.

(b) A recipient shall make all decisions concerning employment under any program or activity to which this part applies in a manner which ensures that discrimination on the basis of handicap does not occur, and shall not limit, segregate, or classify applicants or employees in any way that adversely affects their opportunities or status because of handicap.

(c) The prohibition against discrimination in employment applies to the following activities:

(1) Recruitment, advertising, and the processing of applications for employment;

(2) Hiring, upgrading, promotion, award of tenure, demotion, transfer, layoff, termination, right of return from layoff, and rehiring;

(3) Rates of pay or any other form of compensation and changes in compensation;

(4) Job assignments, job classifications, organizational structures, position descriptions, lines of progression, and seniority lists;

(5) Leaves of absence, sick leave, or any other leave;

(6) Fringe benefits available by virtue of employment, whether or not administered by the recipient;

(7) Selection and financial support for training, including apprenticeship, professional meetings, conferences, and other related activities, and selection for leaves of absence to pursue training;

(8) Employer sponsored activities, including social or recreational programs; or

(9) Any other term, condition, or privilege of employment.

(d) A recipient shall not participate in a contractual or other relationship that has the effect of subjecting qualified handicapped applicants or employees to discrimination prohibited by this subpart. The relationships referred to in this paragraph include relationships with employment and referral agencies, with labor unions, with organizations providing or administering fringe benefits to employees of the recipient, and with organizations providing training and apprenticeship programs.

(e) A recipient shall make reasonable accommodation to the known physical or mental limitations of an otherwise qualified handicapped applicant or employee unless the recipient can demonstrate that the accommodation would impose an undue hardship on the operation of its program.

(f) A recipient shall not use employment tests or criteria that discriminate against handicapped persons and shall ensure that employment tests are adapted for use by persons who have handicaps that impair sensory, manual, or speaking skills.

(g) A recipient shall not conduct a preemployment medical examination or make a preemployment inquiry as to whether an applicant is a handicapped person or as to the nature or severity of a handicap except as permitted by the Department of Justice in 28 CFR 42.513.

§ 7.65 Accessibility.

(a) *General.* A recipient shall operate each program or activity receiving EPA assistance so that such program or activity, when viewed in its entirety, is readily accessible to and usable by handicapped persons. This paragraph does not:

(1) Necessarily require a recipient to make each of its existing facilities or every part of an existing facility accessible to and usable by handicapped persons.

(2) Require a recipient to take any action that the recipient can demonstrate would result in a fundamental alteration in the nature of its program or activity or in undue financial and administrative burdens. If an action would result in such an alternation or such financial and administrative burdens, the recipient shall be required to take any other action that would not result in such an alteration or financial and administrative burdens but would nevertheless ensure that handicapped persons receive the benefits and services of the program or activity receiving EPA assistance.

(b) *Methods of making existing programs accessible.* A recipient may comply with the accessibility requirements of this section by making structural changes, redesigning equipment, reassigning services to accessible buildings, assigning aides to beneficiaries, or any other means that make its program or activity accessible to handicapped persons. In choosing among alternatives, a recipient must give priority to methods that offer program benefits to handicapped persons in the most integrated setting appropriate.

(c) *Deadlines.* (1) Except where structural changes in facilities are necessary, recipients must adhere to the provisions of this section within 60 days after the effective date of this part.

(2) Recipients having an existing facility which does require alterations in order to make a program or activity accessible must prepare a transition plan in accordance with § 7.75 within six months from the effective date of this part. The recipient must complete the changes as soon as possible, but not later than three years from date of award.

(d) *Notice of accessibility*. The recipient must make sure that interested persons, including those with impaired vision or hearing, can find out about the existence and location of the assisted program services, activities, and facilities that are accessible to and usable by handicapped persons.

(e) *Structural and financial feasibility*. This section does not require structural alterations to existing facilities if making such alterations would not be structurally or financially feasible. An alteration is not structurally feasible when it has little likelihood of being accomplished without removing

or altering a load-bearing structural member. Financial feasibility shall take into account the degree to which the alteration work is to be assisted by EPA assistance, the cost limitations of the program under which such assistance is provided, and the relative cost of accomplishing such alterations in manners consistent and inconsistent with accessibility.

§ 7.70 New construction.

(a) *General.* New facilities shall be designed and constructed to be readily accessible to and usable by handicapped persons. Alterations to existing facilities shall, to the maximum extent feasible, be designed and constructed to be readily accessible to and usable by handicapped persons.

(b) *Conformance with Uniform Federal Accessibility Standards.* (1) Effective as of January 18, 1991, design, construction, or alteration of buildings in conformance with sections 3-8 of the Uniform Federal Accessibility Standards (USAF) (appendix A to 41 CFR subpart 101–19.6) shall be deemed to comply with the requirements of this section with respect to those buildings. Departures from particular technical and scoping requirements of UFAS by the use of other methods are permitted where substantially equivalent or greater access to and usability of the building is provided.

(2) For purposes of this section, section 4.1.6(1)(g) of UFAS shall be interpreted to exempt from the requirements of UFAS only mechanical rooms and other spaces that, because of their intended use, will not require accessibility to the public or beneficiaries or result in the employment or residence therein of persons with physical handicaps.

(3) This section does not require recipients to make building alterations that have little likelihood of being accomplished without removing or altering a load-bearing structural member.

[49 FR 1659, Jan. 12, 1984, as amended at 55 FR 52138, 52142, Dec. 19, 1990]

§ 7.75 Transition plan.

If structural changes to facilities are necessary to make the program accessible to handicapped persons, a recipient must prepare a transition plan.

(a) *Requirements.* The transition plan must set forth the steps needed to complete the structural changes required and must be developed with the assistance of interested persons, including handicapped persons or organizations representing handicapped persons. At a minimum, the transition plan must:

(1) Identify the physical obstacles in the recipient's facilities that limit handicapped persons' access to its program or activity,

(2) Describe in detail what the recipient will do to make the facilities accessible,

(3) Specify the schedule for the steps needed to achieve full program accessibility, and include a year-by-year timetable if the process will take more than one year,

(4) Indicate the person responsible for carrying out the plan.

(b) *Availability.* Recipients shall make available a copy of the transition plan to the OCR upon request and to the public for inspection at either the site of the project or at the recipient's main office.

Subpart D—Requirements for Applicants and Recipients

§ 7.80 Applicants.

(a) *Assurances*—(1) *General.* Applicants for EPA assistance shall submit an assurance with their applications stating that, with respect to their programs or activities that receive EPA assistance, they will comply with the requirements of this part. Applicants must also submit any other information that the OCR determines is necessary for preaward review. The applicant's acceptance of EPA assistance is an acceptance of the obligation of this assurance and this part.

(2) *Duration of assurance*—(i) *Real property.* When EPA awards assistance in the form of real property, or assistance to acquire real property, or structures on the property, the assurance will obligate the recipient, or transferee, during the period the real property or structures are used for the purpose for which EPA assistance is extended, or for another purpose in which similar services or benefits are provided. The transfer instrument shall contain a covenant running with the

land which assures nondiscrimination. Where applicable, the covenant shall also retain a right of reverter which will permit EPA to recover the property if the covenant is ever broken.

(ii) *Personal property*. When EPA provides assistance in the form of personal property, the assurance will obligate the recipient for so long as it continues to own or possess the property.

(iii) *Other forms of assistance*. In all other cases, the assurance will obligate the recipient for as long as EPA assistance is extended.

(b) *Wastewater treatment project*. EPA Form 4700–4 shall also be submitted with applications for assistance under Title II of the Federal Water Pollution Control Act.

(c) *Compliance information*. Each applicant for EPA assistance shall submit regarding the program or activity that would receive EPA assistance:

(1) Notice of any lawsuit pending against the applicant alleging discrimination on the basis of race, color, sex, handicap, or national origin;

(2) A brief description of any applications pending to other federal agencies for assistance, and of Federal assistance being provided at the time of the application; and

(3) A statement describing any civil rights compliance reviews regarding the applicant conducted during the two-year period before the application, and information concerning the agency or organization performing the reviews.

(Approved by the Office of Management and Budget under control number 2000–0006)

§ 7.85 Recipients.

(a) *Compliance information*. Each recipient shall collect, maintain, and on request of the OCR, provide the following information to show compliance with this part:

(1) A brief description of any lawsuits pending against the recipient that allege discrimination which this part prohibits;

(2) Racial/ethnic, national origin, sex and handicap data, or EPA Form 4700–4 information submitted with its application;

(3) A log of discrimination complaints which identifies the complaint, the date it was filed, the date the recipient's investigation was completed, the disposition, and the date of disposition; and

(4) Reports of any compliance reviews conducted by any other agencies.

(b) *Additional compliance information*. If necessary, the OCR may require recipients to submit data and information specific to certain programs to determine compliance where there is reason to believe that discrimination may exist in a program or activity receiving EPA assistance or to investigate a complaint alleging discrimination in a program or activity receiving EPA assistance. Requests shall be limited to data and information which is relevant to determining compliance and shall be accompanied by a written statement summarizing the complaint or setting forth the basis for the belief that discrimination may exist.

(c) *Self-evaluation*. Each recipient must conduct a self-evaluation of its administrative policies and practices, to consider whether such policies and practices may involve handicap discrimination prohibited by this part. When conducting the self-evaluation, the recipient shall consult with interested and involved persons including handicapped persons or organizations representing handicapped persons. The evaluation shall be completed within 18 months after the effective date of this part.

(d) Preparing compliance information. In preparing compliance information, a recipient must:

(1) [Reserved]

(2) Use the racial classifications set forth in § 7.25 in determining categories of race, color or national origin.

(e) *Maintaining compliance information*. Recipients must keep records for paragraphs (a) and (b) of this section for three (3) years after completing the project. When any complaint or other action for alleged failure to comply with this part is brought before the three-year period ends, the recipient shall keep records until the complaint is resolved.

(f) Accessibility to compliance information. A recipient shall:

(1) Give the OCR access during normal business hours to its books, records, accounts and other sources of information, including its facilities, as

may be pertinent to ascertain compliance with this part;

(2) Make compliance information available to the public upon request; and

(3) Assist in obtaining other required information that is in the possession of other agencies, institutions, or persons not under the recipient's control. If such party refuses to release that information, the recipient shall inform the OCR and explain its efforts to obtain the information.

(g) *Coordination of compliance effort.* If the recipient employs fifteen (15) or more employees, it shall designate at least one person to coordinate its efforts to comply with its obligations under this part.

(Approved by the Office of Management and Budget under control number 2000–0006)

§7.90 Grievance procedures.

(a) *Requirements.* Each recipient shall adopt grievance procedures that assure the prompt and fair resolution of complaints which allege violation of this part.

(b) *Exception.* Recipients with fewer than fifteen (15) full-time employees need not comply with this section unless the OCR finds a violation of this part or determines that creating a grievance procedure will not significantly impair the recipient's ability to provide benefits or services.

§7.95 Notice of nondiscrimination.

(a) *Requirements.* A recipient shall provide initial and continuing notice that it does not discriminate on the basis of race, color, national origin, or handicap in a program or activity receiving EPA assistance or, in programs covered by section 13, on the basis of sex. Methods of notice must accommodate those with impaired vision or hearing. At a minimum, this notice must be posted in a prominent place in the recipient's offices or facilities. Methods of notice may also include publishing in newspapers and magazines, and placing notices in recipient's internal publications or on recipient's printed letterhead. Where appropriate, such notice must be in a language or languages other than English. The notice must identify the responsible employee designated in accordance with §7.85.

(b) *Deadline.* Recipients of assistance must provide initial notice by thirty (30) calendar days after award and continuing notice for the duration of EPA assistance.

§7.100 Intimidation and retaliation prohibited.

No applicant, recipient, nor other person shall intimidate, threaten, coerce, or discriminate against any individual or group, either:

(a) For the purpose of interfering with any right or privilege guaranteed by the Acts or this part, or

(b) Because the individual has filed a complaint or has testified, assisted or participated in any way in an investigation, proceeding or hearing under this part, or has opposed any practice made unlawful by this regulation.

Subpart E—Agency Compliance Procedures

§7.105 General policy.

EPA's Administrator, Director of the Office of Civil Rights, Project Officers and other responsible officials shall seek the cooperation of applicants and recipients in securing compliance with this part, and are available to provide help.

§7.110 Preaward compliance.

(a) *Review of compliance information.* Within EPA's application processing period, the OCR will determine whether the applicant is in compliance with this part and inform the Award Official. This determination will be based on the submissions required by §7.80 and any other information EPA receives during this time (including complaints) or has on file about the applicant. When the OCR cannot make a determination on the basis of this information, additional information will be requested from the applicant, local government officials, or interested persons or organizations, including handicapped persons or organizations representing such persons. The OCR may also conduct an on-site review only when it has reason to believe discrimination may be occurring in a program

or activity which is the subject of the application.

(b) *Voluntary compliance.* If the review indicates noncompliance, an applicant may agree in writing to take the steps the OCR recommends to come into compliance with this part. The OCR must approve the written agreement before any award is made.

(c) *Refusal to comply.* If the applicant refuses to enter into such an agreement, the OCR shall follow the procedure established by paragraph (b) of § 7.130.

§ 7.115 Postaward compliance.

(a) *Periodic review.* The OCR may periodically conduct compliance reviews of any recipient's programs or activities receiving EPA assistance, including the request of data and information, and may conduct on-site reviews when it has reason to believe that discrimination may be occurring in such programs or activities.

(b) *Notice of review.* After selecting a recipient for review or initiating a complaint investigation in accordance with § 7.120, the OCR will inform the recipient of:

(1) The nature of and schedule for review, or investigation; and

(2) Its opportunity, before the determination in paragraph (d) of this section is made, to make a written submission responding to, rebutting, or denying the allegations raised in the review or complaint.

(c) *Postreview notice.* (1) Within 180 calendar days from the start of the compliance review or complaint investigation, the OCR will notify the recipient in writing by certified mail, return receipt requested, of:

(i) Preliminary findings;

(ii) Recommendations, if any, for achieving voluntary compliance; and

(iii) Recipient's right to engage in voluntary compliance negotiations where appropriate.

(2) The OCR will notify the Award Official and the Assistant Attorney General for Civil Rights of the preliminary findings of noncompliance.

(d) *Formal determination of noncompliance.* After receiving the notice of the preliminary finding of noncompliance in paragraph (c) of this section, the recipient may:

(1) Agree to the OCR's recommendations, or

(2) Submit a written response sufficient to demonstrate that the preliminary findings are incorrect, or that compliance may be achieved through steps other than those recommended by OCR.

If the recipient does not take one of these actions within fifty (50) calendar days after receiving this preliminary notice, the OCR shall, within fourteen (14) calendar days, send a formal written determination of noncompliance to the recipient and copies to the Award Official and Assistant Attorney General.

(e) *Voluntary compliance time limits.* The recipient will have ten (10) calendar days from receipt of the formal determination of noncompliance in which to come into voluntary compliance. If the recipient fails to meet this deadline, the OCR must start proceedings under paragraph (b) of § 7.130.

(f) *Form of voluntary compliance agreements.* All agreements to come into voluntary compliance must:

(1) Be in writing;

(2) Set forth the specific steps the recipient has agreed to take, and

(3) Be signed by the Director, OCR or his/her designee and an official with authority to legally bind the recipient.

§ 7.120 Complaint investigations.

The OCR shall promptly investigate all complaints filed under this section unless the complainant and the party complained against agree to a delay pending settlement negotiations.

(a) *Who may file a complaint.* A person who believes that he or she or a specific class of persons has been discriminated against in violation of this part may file a complaint. The complaint may be filed by an authorized representative. A complaint alleging employment discrimination must identify at least one individual aggrieved by such discrimination. Complaints solely alleging employment discrimination against an individual on the basis of race, color, national origin, sex or religion shall be processed under the procedures for complaints of employment discrimination filed against recipients of federal assistance (see 28 CFR part 42, subpart H and 29 CFR part 1691).

Complainants are encouraged but not required to make use of any grievance procedure established under §7.90 before filing a complaint. Filing a complaint through a grievance procedure does not extend the 180 day calendar requirement of paragraph (b)(2 of this section.

(b) *Where, when and how to file complaint.* The complainant may file a complaint at any EPA office. The complaint may be referred to the region in which the alleged discriminatory acts occurred.

(1) The complaint must be in writing and it must describe the alleged discriminatory acts which violate this part.

(2) The complaint must be filed within 180 calendar days of the alleged discriminatory acts, unless the OCR waives the time limit for good cause. The filing of a grievance with the recipient does not satisfy the requirement that complaints must be filed within 180 days of the alleged discriminatory acts.

(c) *Notification.* The OCR will notify the complainant and the recipient of the agency's receipt of the complaint within five (5) calendar days.

(d) *Complaint processing procedures.* After acknowledging receipt of a complaint, the OCR will immediately initiate complaint processing procedures.

(1) *Preliminary investigation* (i) Within twenty (20) calendar days of acknowledgment of the complaint, the OCR will review the complaint for acceptance, rejection, or referral to the appropriate Federal agency.

(ii) If the complaint is accepted, the OCR will notify the complainant and the Award Official. The OCR will also notify the applicant or recipient complained against of the allegations and give the applicant or recipient opportunity to make a written submission responding to, rebutting, or denying the allegations raised in the complaint.

(iii) The party complained against may send the OCR a response to the notice of complaint within thirty (30) calendar days of receiving it.

(2) *Informal resolution.* (i) OCR shall attempt to resolve complaints informally whenever possible. When a complaint cannot be resolved informally, OCR shall follow the procedures established by paragraphs (c) through (e) of §7.115.

(ii) [Reserved]

(e) *Confidentiality.* EPA agrees to keep the complainant's identity confidential except to the extent necessary to carry out the purposes of this part, including the conduct of any investigation, hearing, or judicial proceeding arising thereunder. Ordinarily in complaints of employment discrimination, the name of the complainant will be given to the recipient with the notice of complaint.

(f) [Reserved]

(g) *Dismissal of complaint.* If OCR's investigation reveals no violation of this part, the Director, OCR, will dismiss the complaint and notify the complainant and recipient.

§7.125 Coordination with other agencies.

If, in the conduct of a compliance review or an investigation, it becomes evident that another agency has jurisdiction over the subject matter, OCR will cooperate with that agency during the continuation of the review of investigation. EPA will:

(a) Coordinate its efforts with the other agency, and

(b) Ensure that one of the agencies is designated the lead agency for this purpose. When an agency other than EPA serves as the lead agency, any action taken, requirement imposed, or determination made by the lead agency, other than a final determination to terminate funds, shall have the same effect as though such action had been taken by EPA.

§7.130 Actions available to EPA to obtain compliance.

(a) General. If compliance with this part cannot be assured by informal means, EPA may terminate or refuse to award or to continue assistance. EPA may also use any other means authorized by law to get compliance, including a referral of the matter to the Department of Justice.

(b) Procedure to deny, annul, suspend or terminate EPA assistance.

(1) *OCR finding.* If OCR determines that an applicant or recipient is not in compliance with this part, and if compliance cannot be achieved voluntarily,

OCR shall make a finding of noncompliance. The OCR will notify the applicant or recipient (by registered mail, return receipt requested) of the finding, the action proposed to be taken, and the opportunity for an evidentiary hearing.

(2) *Hearing.* (i) Within 30 days of receipt of the above notice, the applicant or recipient shall file a written answer, under oath or affirmation, and may request a hearing.

(ii) The answer and request for a hearing shall be sent by registered mail, return receipt requested, to the Chief Administrative Law Judge (ALJ) (A–110), United States Environmental Protection Agency, 401 M Street, SW., Washington, DC 20460. Upon receipt of a request for a hearing, the ALJ will send the applicant or recipient a copy of the ALJ's procedures. If the recipient does not request a hearing, it shall be deemed to have waived its right to a hearing, and the OCR finding shall be deemed to be the ALJ's determination.

(3) *Final decision and disposition.* (i) The applicant or recipient may, within 30 days of receipt of the ALJ's determination, file with the Administrator its exceptions to that determination. When such exceptions are filed, the Administrator may, within 45 days after the ALJ's determination, serve to the applicant or recipient, a notice that he/she will review the determination. In the absence of either exceptions or notice of review, the ALJ's determination shall constitute the Administrator's final decision.

(ii) If the Administrator reviews the ALJ's determination, all parties shall be given reasonable opportunity to file written statements. A copy of the Administrator's decision will be sent to the applicant or recipient.

(iii) If the Administrator's decision is to deny an application, or annul, suspend or terminate EPA assistance, that decision becomes effective thirty (30) days from the date on which the Administrator submits a full written report of the circumstances and grounds for such action to the Committees of the House and Senate having legislative jurisdiction over the program or activity involved. The decision of the Administrator shall not be subject to further administrative appeal under EPA's General Regulation for Assistance Programs (40 CFR part 30, subpart L).

(4) *Scope of decision.* The denial, annulment, termination or suspension shall be limited to the particular applicant or recipient who was found to have discriminated, and shall be limited in its effect to the particular program or the part of it in which the discrimination was found.

§ 7.135 Procedure for regaining eligibility.

(a) *Requirements.* An applicant or recipient whose assistance has been denied, annulled, terminated, or suspended under this part regains eligibility as soon as it:

(1) Provides reasonable assurance that it is complying and will comply with this part in the future, and

(2) Satisfies the terms and conditions for regaining eligibility that are specified in the denial, annulment, termination or suspension order.

(b) *Procedure.* The applicant or recipient must submit a written request to restore eligibility to the OCR declaring that it has met the requirements set forth in paragraph (a) of this section. Upon determining that these requirements have been met, the OCR must notify the Award Official, and the applicant or recipient that eligibility has been restored.

(c) Rights on denial of restoration of eligibility. If the OCR denies a request to restore eligibility, the applicant or recipient may file a written request for a hearing before the EPA Chief Administrative Law Judge in accordance with paragraph (c) § 7.130, listing the reasons it believes the OCR was in error.

APPENDIX A TO PART 7—EPA ASSISTANCE PROGRAMS AS LISTED IN THE ''CATALOG OF FEDERAL DOMESTIC ASSISTANCE''

1. Assistance provided by the Office of Air, Noise and Radiation under the Clean Air Act of 1977, as amended; Pub. L. 95–95, 42 U.S.C. 7401 *et seq.* (ANR 66.001)

2. Assistance provided by the Office of Air, Noise and Radiation under the Clean Air Act of 1977, as amended; Pub. L. 95–95, 42 U.S.C. 7401 *et seq.* (ANR 66.003)

3. Assistance provided by the Office of Water under the Clean Water Act of 1977, as amended; sections 101(e), 109(b), 201–05, 207,

208(d), 210–12, 215–19, 304(d)(3), 313, 501, 502, 511 and 516(b); Pub. L. 97–117; Pub. L. 95–217; Pub. L. 96–483; 33 U.S.C. 1251 *et seq.* (OW 66.418)

4. Assistance provided by the Office of Water under the Clean Water Act of 1977, as amended; section 106; Pub. L. 95–217; 33 U.S.C. 1251 *et seq.* (OW 66.419)

5. Assistance provided by the Office of Water under the Clean Water Act of 1977, as amended; Pub. L. 95–217; 33 U.S.C. 1251 *et seq.* (OW 66.426)

6. Assistance provided by the Office of Water under the Public Health Service Act, as amended by the Safe Drinking Water Act, Pub. L. 93–523; as amended by Pub. L. 93–190; Pub. L. 96–63; and Pub. L. 93–502. (OW 66.432)

7. Assistance provided by the Office of Water under the Safe Drinking Water Act, Pub. L. 93–523, as amended by Pub. L. 96–63, Pub. L. 95–190, and Pub. L. 96–502. (OW 66.433)

8. Assistance provided by the Office of Water under the Clean Water Act of 1977, section 205(g), as amended by Pub. L. 95–217 and the Federal Water Pollution Control Act, as amended; Pub. L. 97–117; 33 U.S.C. 1251 *et seq.* (OW 66.438)

9. Assistance provided by the Office of Water under the Resource Conservation and Recovery Act of 1976; as amended by the Solid Waste Disposal Act; Pub. L. 94–580; section 3011, 42 U.S.C. 6931, 6947, 6948–49. (OW 66.802).

10. Assistance provided by the Office of Research and Development under the Clean Air Act of 1977, as amended; Pub. L. 95–95; 42 U.S.C. *et seq.*; Clean Water Act of 1977, as amended; Pub. L. 95–217; 33 U.S.C. 1251 *et seq.*, section 8001 of the Solid Water Disposal Act, as amended by the Resource Conservation and Recovery Act of 1976; Pub. L. 94–580; 42 U.S.C. 6901, Public Health Service Act as amended by the Safe Drinking Water Act as amended by Pub. L. 95–190; Federal Insecticide, Fungicide and Rodenticide Act; Pub. L. 95–516; 7 U.S.C. 136 *et seq.*, as amended by Pub. L.'s 94–140 and 95–396; Toxic Substances Control Act; 15 U.S.C. 2609; Pub. L. 94–469. (ORD 66.500)

11. Assistance provided by the Office of Research and Development under the Clean Air Act of 1977, as amended; Pub. L. 95–95; 42 U.S.C. 7401 *et seq.* (ORD 66.501)

12. Assistance provided by the Office of Research and Development under the Federal Insecticide, Fungicide and Rodenticide Act, Pub. L. 95–516, 7 U.S.C. 136 *et seq.*, as amended by Pub. L.'s 94–140 and 95–396. (ORD 66.502)

13. Assistance provided by the Office of Research and Development under the Solid Waste Disposal Act, as amended by the Resource Conservation and Recovery Act of 1976; 42 U.S.C. 6901, Pub. L. 94–580, section 8001. (ORD 66.504)

14. Assistance provided by the Office of Research and Development under the Clean Water Act of 1977, as amended; Pub. L. 95–217; 33 U.S.C. 1251 *et seq.* (ORD 66.505)

15. Assistance provided by the Office of Research and Development under the Public Health Service Act as amended by the Safe Drinking Water Act, as amended by Pub. L. 95–190 (ORD 66.506)

16. Assistance provided by the Office of Research and Development under the Toxic Substances Control Act; Pub. L. 94–469; 15 U.S.C. 2609; section 10. (ORD 66.507)

17. Assistance provided by the Office of Administration, including but not limited to: Clean Air Act of 1977, as amended, Pub. L. 95–95; 42 U.S.C. 7401 *et seq.*, Clean Water Act of 1977, as amended; Pub. L. 95–217; 33 U.S.C. 1251 *et seq.;* Solid Waste Disposal Act, as amended by the Resource Conservation and Recovery Act of 1976; 42 U.S.C. 6901; Pub. L. 94–580; Federal Insecticide, Fungicide and Rodenticide Act; Pub. L. 92–516; 7 U.S.C. 136 *et seq.* as amended by Pub. L.'s 94–140 and 95–396; Public Health Service Act, as amended by the Safe Drinking Water Act, as amended by Pub. L. 95–190. (OA 66.600)

18. Assistance provided by the Office of Administration under the Clean Water Act of 1977, as amended; Pub. L. 95–217; section 213; 33 U.S.C. 1251 *et seq.* (OA 66.603)

19. Assistance provided by the Office of Enforcement Counsel under the Federal Insecticide and Rodenticide Act, as amended; Pub. L. 92–516; 7 U.S.C. 136 *et seq.*, as amended by Pub. L. 94–140, section 23(a) and Pub. L. 95–396. (OA 66.700)

20. Assistance provided by the Office of Solid Waste and Emergency Response under the Comprehensive Environmental Responses, Compensation and Liability Act of 1980; Pub. L. 96–510, section 3012, 42 U.S.C. 9601, *et seq.* (OSW—number not to be assigned since Office of Management and Budget does not catalog one-year programs.)

21. Assistance provided by the Office of Water under the Clean Water Act as amended; Pub. L. 97–117, 33 U.S.C. 1313. (OW—66.454)

PART 9—OMB APPROVALS UNDER THE PAPERWORK REDUCTION ACT

AUTHORITY: 7 U.S.C. 135 et seq., 136–136y; 15 U.S.C. 2001, 2003, 2005, 2006, 2601–2671; 21 U.S.C. 331j, 346a, 348; 31 U.S.C. 9701; 33 U.S.C. 1251 et seq., 1311, 1313d, 1314, 1318, 1321, 1326, 1330, 1342, 1344, 1345 (d) and (e), 1361; E.O. 11735, 38 FR 21243, 3 CFR, 1971–1975 Comp. p. 973; 42 U.S.C. 241, 242b, 243, 246, 300f, 300g, 300g–1, 300g–2, 300g–3, 300g–4, 300g–5, 300g–6, 300j–1, 300j–2, 300j–3, 300j–4, 300j–9, 1857 et seq., 6901–6992k, 7401–7671q, 7542, 9601–9657, 11023, 11048.

§9.1 OMB approvals under the Paperwork Reduction Act.

This part consolidates the display of control numbers assigned to collections of information in certain EPA

regulations by the Office of Management and Budget (OMB) under the Paperwork Reduction Act (PRA). This part fulfills the requirements of section 3507(f) of the PRA.

40 CFR citation	OMB control No.
Public Information	
Part 2, subpart B	2050–0143
General Regulation for Assistance Programs for Other than State and Local Governments	
30.400	2030–0020
30.500	2030–0020
30.501	2030–0020
30.503	2030–0020
30.505	2030–0020
30.510	2030–0020
30.520	2030–0020
30.530	2030–0020
30.531	2030–0020
30.532	2030–0020
30.535	2030–0020
30.1002	2030–0020
30.1003	2030–0020
30.1200	2030–0020
Uniform Administrative Requirements for Grants and Cooperative Agreements to State and Local Governments	
31.10	2030–0020
31.20–31.21	2030–0020
31.31–31.32	2030–0020
31.36(g)–31.36(h)	2030–0020
31.40	2030–0020
31.42	2030–0020
31.6	2030–0020
Procurement Under Assistance Agreements	
33.110	2030–0003
33.211	2030–0003
State and Local Assistance	
35.2015	2040–0027
35.2025	2040–0027
35.2034	2040–0027
35.2040	2040–0027
35.2105–35.2107	2040–0027
35.2110	2040–0027
35.2114	2040–0027
35.2118	2040–0027
35.2120	2040–0027
35.2127	2040–0027
35.2130	2040–0027
35.2140	2040–0027
35.2211–35.2212	2040–0027
35.2215–35.2216	2040–0027
35.2218	2040–0027
35.3010	2040–0095
35.3030	2040–0095
35.3130	2040–0118
35.3135	2040–0118
35.3140	2040–0118
35.3145	2040–0118
35.3150	2040–0118
35.3155	2040–0118
35.3160	2040–0118
35.3165	2040–0118
35.3170	2040–0118
35.6055(a)(2)	2010–0020
35.6055(b)(1)	2010–0020
35.6055(b)(2)(i)–(ii)	2010–0020
35.6105(a)(2)(i)–(v), (vii)	2010–0020
35.6110(b)(2)	2010–0020
35.6120	2010–0020
35.6145	2010–0020
35.6155(a), (c)	2010–0020
35.6230(a), (c)	2010–0020
35.6300(a)(3)	2010–0020
35.6315(c)	2010–0020
35.6320	2010–0020
35.6340(a)	2010–0020
35.6350	2010–0020
35.6500	2010–0020
35.6550(a)(1)(ii)	2010–0020
35.6550(b)(1)(iii)	2010–0020
35.6550(b)(2)(i)	2010–0020
35.6585	2010–0020
35.6595(a)	2010–0020
35.6600(a)	2010–0020
35.6650	2010–0020
35.6655	2010–0020
35.6660	2010–0020
35.6665(a)	2010–0020
35.6700	2010–0020
35.6705	2010–0020
35.6710	2010–0020
35.6805	2010–0020
35.6815 (a), (d), (e)	2010–0020
35.9000–35.9070	2040–0138
Requirements for Preparation, Adoption, and Submittal of Implementation Plans	
51.160–51.166	2060–0003
51.321–51.323	2060–0088
51.353–51.354	2060–0252
51.365–51.366	2060–0252
51.370–51.371	2060–0252
51.850–51.860	2060–0279
Approval and Promulgation of Implementation Plans	
52.21	2060–0003
52.741	2060–0203
Outer Continental Shelf Air Regulations	
55.4–55.8	2060–0249
55.11–55.14	2060–0249
Ambient Air Quality Surveillance	
58.11–58.14	2060–0084
58.20–58.23	2060–0084
58.25–58.28	2060–0084
58.30–58.31	2060–0084
58.33	2060–0084
58.35	2060–0084
58.40–58.41	2060–0084
58.43	2060–0084
58.45	2060–0084
58.50	2060–0084
Standards of Performance for New Stationary Sources [1]	
60.7(d)	2060–0207

40 CFR citation	OMB control No.
60.45–60.47	2060–0026
60.46a–60.49a	2060–0023
60.40b	2060–0072
60.42b	2060–0072
60.44b–60.49b	2060–0072
60.42c	2060–0202
60.44c–60.48c	2060–0202
60.53–60.54	2060–0040
60.50a	2060–0210
60.56a–60.59a	2060–0210
60.63–60.65	2060–0025
60.73–60.74	2060–0019
60.84–60.85	2060–0041
60.93	2060–0083
60.104–60.108	2060–0022
60.113a–60.115a	2060–0121
60.113b–60.116b	2060–0074
60.123	2060–0080
60.133	2060–0110
60.142–60.144	2060–0029
60.143a–60.145a	2060–0029
60.153–60.155	2060–0035
60.192(b)	2060–0031
60.194–60.195	2060–0031
60.203–60.204	2060–0037
60.213–60.214	2060–0037
60.223–60.224	2060–0037
60.233–60.234	2060–0037
60.243–60.244	2060–0037
60.253–60.254	2060–0122
60.273–60.276	2060–0038
60.273a–60.276a	2060–0038
60.284–60.286	2060–0021
60.292–60.293	2060–0054
60.296	2060–0054
60.303	2060–0082
60.310	2060–0106
60.313–60.316	2060–0106
60.334–60.335	2060–0028
60.343–60.344	2060–0063
60.373–60.374	2060–0081
60.384–60.386	2060–0016
60.393–60.396	2060–0034
60.398	2060–0034
60.403–60.404	2060–0111
60.433–60.435	2060–0105
60.443–60.447	2060–0004
60.453–60.456	2060–0108
60.463–60.466	2060–0107
60.473–60.474	2060–0002
60.482–2	2060–0012
60.482–3	2060–0012
60.482–4	2060–0012
60.482–7	2060–0012
60.482–8	2060–0012
60.482–10	2060–0012
60.483–1	2060–0012
60.483–2	2060–0012
60.484–60.487	2060–0012
60.493–60.496	2060–0001
60.502–60.503	2060–0006
60.505	2060–0006
60.530–60.536	2060–0161
60.537 (a)(1)–(2), (a)(4)–(5), (b)–(i)	2060–0161
60.538–60.539	2060–0161
60.543 (b)(2)–(4), (c)–(n)	2060–0156
60.544	2060–0156
60.545 (a)–(d), (f)	2060–0156
60.546 (a)–(e), (f)(4)–(6), (g)–(j)	2060–0156
60.547	2060–0156
60.562–1	2060–0145
60.562–2	2060–0145
60.563–60.565	2060–0145
60.580	2060–0073
60.583–60.585	2060–0073
60.592–60.593	2060–0067
60.603–60.604	2060–0059
60.613–60.615	2060–0197
60.622	2060–0079
60.624–60.625	2060–0079
60.632–60.636	2060–0120
60.640	2060–0120
60.642–60.644	2060–0120
60.646–60.647	2060–0120
60.663–60.665	2060–0197
60.670	2060–0050
60.672	2060–0050
60.674–60.676	2060–0050
60.683–60.685	2060–0114
60.692–1	2060–0172
60.692–2	2060–0172
60.692–3	2060–0172
60.692–4	2060–0172
60.692–5	2060–0172
60.693–1	2060–0172
60.693–2	2060–0172
60.695–60.698	2060–0172
60.703–60.705	2060–0269
60.710	2060–0171
60.713–60.717	2060–0171
60.722–60.725	2060–0162
60.734–60.736	2060–0251
60.740	2060–0181
60.743–60.747	2060–0181
National Emission Standards for Hazardous Air Pollutants [2]	
61.24–61.25	2060–0191
61.32–61.34	2060–0092
61.53–61.55	2060–0097
61.65(b)–(d)	2060–0071
61.67–61.71	2060–0071
61.93–61.95	2060–0191
61.103–61.105	2060–0191
61.107	2060–0191
61.123–61.124	2060–0191
61.126	2060–0191
61.132–61.133	2060–0185
61.135–61.139	2060–0185
61.142	2060–0101
61.144–61.147	2060–0101
61.149	2060–0101
61.150–61.155	2060–0101
61.163–61.165	2060–0043
61.203	2060–0191
61.206–61.209	2060–0191
61.223–61.224	2060–0191
61.242–1	2060–0068
61.242–2	2060–0068
61.242–3	2060–0068
61.242–4	2060–0068
61.242–7	2060–0068
61.242–8	2060–0068
61.242–10	2060–0068
61.242–11	2060–0068
61.243–1	2060–0068
61.243–2	2060–0068
61.244–61.247	2060–0068
61.253–61.255	2060–0191
61.271–61.276	2060–0185
61.300	2060–0182
61.302–61.305	2060–0182
61.342	2060–0183

40 CFR citation	OMB control No.
61.344–61.349	2060–0183
61.354–61.357	2060–0183
National Emission Standards for Hazardous Air Pollutants for Source Categories [3]	
63.52–63.56	2060–0266
63.72	2060–0222
63.74–63.79	2060–0222
63.91–63.96	2060–0264
63.103	2060–0282
63.105	2060–0282
63.117–63.118	2060–0282
63.122–63.123	2060–0282
63.129–63.130	2060–0282
63.146–63.148	2060–0282
63.151–63.152	2060–0282
63.181–63.182	2060–0282
63.302–63.311	2060–0253
63.322–63.325	2060–0234
63.345–63.347	2060–0327
63.363–63.367	2060–0283
63.403–63.406	2060–0268
63.420	2060–0325
63.422–63.428	2060–0325
63.467–63.468	2060–0273
63.525–63.528	2060–0290
63.548–63.550	2060–0296
63.563–63.567	2060–0289
63.653	2060–0340
63.654	2060–0340
63.703–63.707	2060–0326
63.752–63.753	2060–0341
63.806–63.807	2060–0324
63.829–63.830	2060–0335
Chemical Accident Prevention Provisions	
68.120 (a), (e), and (g)	2050–0127
State Operating Permit Programs	
70.3–70.11	2060–0243
Federal Operating Permit Programs	
71.5	2060–0336
71.6(a),(c),(d),(g)	2060–0336
71.7	2060–0336
71.9(e)–(j)	2060–0336
71.24–71.26	2060–0276
Permits Regulation	
72.7–72.10	2060–0258
72.20–72.25	2060–0258
72.30–72.33	2060–0258
72.40–72.44	2060–0258
72.50–72.51	2060–0258
72.60–72.69	2060–0258
72.70–72.74	2060–0258
72.80–72.85	2060–0258
72.90–72.96	2060–0258
Allowance System	
73.10–73.13	2060–0261
73.16	2060–0261
73.18–73.21	2060–0261
73.30–73.38	2060–0258
73.50–73.53	2060–0258
73.70–73.77	2060–0221
73.80–73.86	2060–0258
73.90	2060–0258
Sulfur Dioxide Opt-ins	
74.12	2060–0258
74.14	2060–0258
74.16	2060–0258
74.18	2060–0258
74.20	2060–0258
74.22	2060–0258
74.24–74.25	2060–0258
74.41	2060–0258
74.43–74.44	2060–0258
74.46–74.47	2060–0258
74.60–74.64	2060–0258
Continuous Emission Monitoring	
75.4–75.5	2060–0258
75.10–75.18	2060–0258
75.20–75.24	2060–0258
75.30–75.34	2060–0258
75.40–75.48	2060–0258
75.50–75.52	2060–0258
75.53–75.56	2060–0258
75.60–75.67	2060–0258
Nitrogen Oxides Emission Reduction Program	
76.8–76.15	2060-0258
Excess Emissions	
77.3–77.6	2060–0258
Appeal Procedures for Acid Rain Program	
78.1–78.20	2060–0258
Registration of Fuels and Fuel Additives	
79.10–79.11	2060–0150
79.20–79.21	2060–0150
79.31–79.33	2060–0150
79.51(a), (c), (d), (g), (h)	2060–0150
79.52	2060–0150
79.57(a)(5)	2060–0150
79.57(f)(5)	2060–0150
79.58(e)	2060–0150
79.59(b)–(d)	2060–0150
79.60	2060–0150
79.61(e)	2060–0150
79.62–79.68	2060–0297
Regulation of Fuels and Fuel Additives	
80.20	2060–0066
80.25	2060–0066
80.27	2060–0178
80.29(c)	2060–0308
80.141(c)–(f)	2060–0275
80.157	2060–0275
80.158	2060–0275

40 CFR citation	OMB control No.
80.160	2060–0275
Protection of Stratospheric Ozone	
82.9–82.13	2060–0170
82.21	2060–0170
82.36	2060–0247
82.38	2060–0247
82.40	2060–0247
82.42	2060–0247
82.122	2060–0259
82.156	2060–0256
82.160–82.162	2060–0256
82.164	2060–0256
82.166	2060–0256
82.176(a)	2060–0226
82.176(c)(3)	2060–0226
82.178	2060–0226
82.180(a)(5)	2060–0226
82.180(b)(3)	2060–0226
82.184(c)	2060–0226
82.184(e)	2060–0226
Control of Air Pollution From Motor Vehicles and Motor Vehicle Engines	
85.503	2060–0104
85.505	2060–0104
85.1503–85.1507	2060–0095
85.1509–85.1510	2060–0095
85.1511(b)–(d), (f)	2060–0095
85.1511(b)(3)	2060–0007
85.1512	2060–0095
85.1514–85.1515	2060–0095
85.1703	2060–0124
85.1705–85.1706	2060–0007
85.1901–85.1909	2060–0048
85.2112–85.2123	2060–0065
85.2114	2060–0016
85.2115	2060–0016
Control of Air Pollution From New and In-Use Motor Vehicles and New and In-Use Motor Vehicle Engines: Certification and Test Procedures	
86.079–31–86.079–33	2060–0104
86.079–36	2060–0104
86.079–39	2060–0104
86.080–12	2060–0104
86.082–34	2060–0104
86.085–13	2060–0104
86.085–37	2060–0104
86.087–38	2060–0104
86.090–14	2060–0104
86.090–21	2060–0104
86.090–25	2060–0104
86.090–26	2060–0104
86.090–27	2060–0104
86.091–7	2060–0104
86.091–15	2060–0104
86.091–21	2060–0104
86.091–23	2060–0104
86.091–28	2060–0104
86.091–30	2060–0104
86.092–14	2060–0104
86.092–15	2060–0104
86.092–23	2060–0104
86.092–24	2060–0104
86.092–26	2060–0104
86.092–35	2060–0104
86.094–7–86.094–9	2060–0104
86.094–15–86.094–16	2060–0104
86.094–17	2060–0104
86.094–18	2060–0104
86.094–21	2060–0104
86.094–23	2060–0104
86.094–24(a)(3)(iii)	2060–0314
86.094–25	2060–0104
86.094–30	2060–0104
86.094–35	2060–0104
86.095–14	2060–0104
86.095–23	2060–0104
86.095–24	2060–0104
86.095–26	2060–0104
86.095–30	2060–0104
86.095–35	2060–0104
86.094–38	2060–0104
86.096–7	2060–0104
86.096–8	2060–0104
86.096–9	2060-0104
86.096–10	2060–0104
86.096–14	2060–0104
86.096–21	2060-0104
86.096–23	2060-0104
86.096–24	2060-0104
86.096–26	2060–0104
86.096–30	2060–0104
86.096–35	2060-0104
86.097–9	2060–0104
86.098–23	2060–0104
86.098–28	2060–0104
86.099–8	2060–0104
86.099–9	2060–0104
86.099–10	2060–0104
86.111–94	2060–0104
86.113–82	2060–0104
86.113–87	2060–0104
86.113–90	2060–0104
86.113–91	2060–0104
86.113–94	2060–0104
86.135–82	2060–0104
86.135–90	2060–0104
86.135–94	2060–0104
86.142–90	2060–0104
86.144–90	2060–0104
86.144–94	2060–0104
86.150–98	2060–0104
86.336–79	2060–0104
86.337–79	2060–0104
86.412–78	2060–0104
86.414–78	2060–0104
86.415–78	2060–0104
86.416–80	2060–0104
86.421–78	2060–0104
86.423–78	2060–0104
86.427–78	2060–0104
86.428–80	2060–0104
86.429–78	2060–0104
86.431–78	2060–0104
86.432–78	2060–0104
86.434–78	2060–0104
86.435–78	2060–0104
86.436–78	2060–0104
86.437–78	2060–0104
86.438–78	2060–0104
86.439–78	2060–0104
86.440–78	2060–0104
86.513–94	2060–0104
86.537–90	2060–0104
86.542–90	2060–0104
86.603–88	2060–0064
86.604–84	2060–0064
86.605–88	2060–0064
86.606–84	2060–0064

40 CFR citation	OMB control No.
86.607–84	2060–0064
86.608–88	2060–0064
86.608–90	2060–0064
86.608–96	2060–0104
86.609–84	2060–0064
86.609–96	2060–0104
86.612–84	2060–0064
86.614–84	2060–0064
86.615–84	2060–0064
86.709–94	2060–0104
86.709–99	2060–0104
86.884–5	2060–0104
86.884–7	2060–0104
86.884–9	2060–0104
86.884–10	2060–0104
86.884–12	2060–0104
86.884–13	2060–0104
86.1003–88	2060–0064
86.1003–90	2060–0064
86.1004–84	2060–0064
86.1005–88	2060–0064
68.1005–90	2060–0064
86.1006–84	2060–0064
86.1007–84	2060–0064
86.1008–88	2060–0064
86.1008–90	2060–0064
86.1008–96	2060–0104
86.1009–84	2060–0064
86.1009–96	2060–0104
86.1012–84	2060–0064
86.1014–84	2060–0064
86.1015–87	2060–0064
86.1106–87	2060–0132
86.1108–87	2060–0132
86.1110–87	2060–0132
86.1111–87	2060–0104
86.1112–87–86.1115–87	2060–0132
86.1213–85	2060–0104
86.1213–87	2060–0104
86.1242–85	2060–0104
86.1242–90	2060–0104
86.1308–84	2060–0104
86.1310–90	2060–0104
86.1311–94	2060–0104
86.1313–84	2060–0104
86.1313–87	2060–0104
86.1313–90	2060–0104
86.1313–91	2060–0104
86.1313–94	2060–0104
86.1314–84	2060–0104
86.1316–84	2060–0104
86.1316–90	2060–0104
86.1319–84	2060–0104
86.1319–90	2060–0104
86.1321–84	2060–0104
86.1321–90	2060–0104
86.1323–84	2060–0104
86.1327–84	2060–0104
86.1327–88	2060–0104
86.1327–90	2060–0104
86.1332–84	2060–0104
86.1332–90	2060–0104
86.1334–84	2060–0104
86.1335–90	2060–0104
86.1336–84	2060–0104
86.1340–84	2060–0104
86.1340–90	2060–0104
86.1341–90	2060–0104
86.1342–90	2060–0104
86.1344–94	2060–0104
86.1413	2060–0104
86.1427	2060–0104
86.1432	2060–0104
86.1434	2060-0104
86.1437	2060–0104
86.1442	2060–0104
86.1542–84	2060–0104
86.1544–84	2060–0104
86.2500	2060–0104
Clean–Fuel Vehicles	
88.104–94 (a), (c), (e), (f), (g), (h), (i), (j), (k)	2060–0104
88.105–94	2060–0104
88.204–94(b)(1)	2060–0314
88.204–94(c)	2060–0314
88.305–94	2060–0104
88.306–94(a), (b) introductory text	2060–0104
88.306–94(b)(1)	2060–0314
88.306–94(b)(2)	2060–0314
88.306–94(b)(4)	2060–0314
88.306–94(c)	2060–0314
88.306–94(f)	2060–0314
Control of Emissions From New and In-Use Nonroad Engines	
89.1	2060–0124
89.2	2060–0124
89.114–96–89.120–96	2060–0287
89.122–96–89.127–96	2060–0287
89.129–96	2060–0287
89.203–96–89.207–96	2060–0287
89.209–96–89.211–96	2060–0287
89.304–96–89.331–96	2060–0287
89.404–96–89.424–96	2060–0287
89.505–89.905	2060–0064
89.511	2060–0064
89.512	2060–0064
89.603–89.605	2060–0095
89.607–89.610	2060–0095
89.611	2060–0007, 2060–0095
89.612	2060–0095
89.801	2060–0048
89.803	2060–0048
89.903	2060–0048
89.905	2060–0007
89.906	2060–0007
Control of Emissions From New and In-use Nonroad Engines	
90.107–90.108	2060–0338
90.113	2060–0338
90.115–90.124	2060–0338
90.126	2060–0338
90.304–90.329	2060–0338
90.404–90.427	2060–0338
90.505–90.509	2060–0295
90.511–90.512	2060–0295
90.604	2060–0294
90.611–90.613	2060–0294
90.800	2060–0048
90.802–90.804	2060–0048
90.806	2060–0048
90.903	2060–0124
90.905–90.906	2060–0007
Determining Conformity of Federal Actions to State or Federal Implementation Plans	
93.150–93.160	2060–0279

40 CFR citation	OMB control No.
Mandatory Patent Licenses	
95.2	2060–0307
Oil Pollution Prevention	
112.1–112.7	2050–0021
Oil Pollution Prevention; Non-Transportation-Related Onshore Facilities	
112.20	2050–0135
Designation, Reportable Quantities, and Notification for Hazardous Substances	
116.4	2050–0046
117.3	2050–0046
117.21	2050–0046
EPA Administered Permit Programs: The National Pollutant Discharge Elimination System	
122.21(f)–(l)	2040–0086, 2040–0170
122.21(j)(4)	2040–0150
122.21(m)–(p)	2040–0068, 2040–0170
122.26(c), (d)	2040–0086
122.41(h)	2040–0068, 2040–0170
122.41(j)	2040–0009, 2040–0110, 2040–0170
122.41(l)	2040–0110, 2040–0068, 2040–0170
122.42(c)	2040–0086
122.42(a), (b), (l)	2040–0068, 2040–0170
122.44(g), (i)	2040–0004, 2040–0170
122.44(r)	2040–0180
122.45(b)	2040–0004, 2040–0110
122.45(b)(4)	2040–0068
122.47(a)	2040–0110, 2040–0170
122.47(b)	2040–0110, 2040–0068, 2040–0170
122.48	2040–0004, 2040–0170
122.62(a)	2040–0068, 2040–0170
122.63	2040–0068, 2040–0170
State Permit Requirements	
123.21–123.24	2040–0057, 2040–0170
123.25	2040–0004, 2040–0110, 2040–0170, 2040–0180
123.26–123.29	2040–0057, 2040–0170
123.43	2040–0057, 2040–0170
123.44	2040–0057, 2040–0170, 2040–0180
123.45	2040–0057, 2040–0170
123.62	2040–0057, 2040–0170, 2040–0180
123.63	2040–0057, 2040–0170, 2040–0180
123.64	2040–0057, 2040–0170
Procedures for Decisionmaking	
124.5	2040–0068
124.31	2050–0149
124.32	2050–0149
124.33	2050–0149
124.53–124.54	2040–0057
Criteria and Standards for the National Pollutant Discharge Elimination System	
125.59–125.67, and Appendix A and B	2040–0088
Water Quality Planning and Management	
130.6–130.10	2040–0071
130.15	2040–0071
Water Quality Standards Regulation	
131.1	2040–0180
131.5	2040–0180
131.6–131.8	2040–0049
131.20	2040–0049
131.21	2040–0049, 2040–0180
131.22	2040–0049
131.31–131.36	2040–0049
Water Quality Guidance for the Great Lakes System	
132.1	2040–0180
132.2	2040–0180
132.3	2040–0180
132.4	2040–0180
132.5	2040–0180
Part 132, Appendix A	2040–0180
Part 132, Appendix B	2040–0180
Part 132, Appendix C	2040–0180
Part 132, Appendix D	2040–0180
Part 132, Appendix E	2040–0180
Part 132, Appendix F	2040–0180
National Primary Drinking Water Regulations	
141.2	2040–0090
141.4	2040–0090
141.11–141.15	2040–0090
141.21–141.22	2040–0090
141.23–141.24	2040–0090
141.25–141.30	2040–0090
141.31–141.32	2040–0090

40 CFR citation	OMB control No.
141.33–141.35	2040–0090
141.40	2040–0090
141.41–141.43	2040–0090
141.50–141.52	2040–0090
141.60–141.63	2040–0090
141.70–141.75	2040–0090
141.80–141.91	2040–0090
141.100	2040–0090
141.110–141.111	2040–0090
National Primary Drinking Water Regulations Implementation	
142.2–142.3	2040–0090
142.10–142.15	2040–0090
142.16	2060–0090
142.17–142.24	2040–0090
142.56–142.57	2040–0090
142.60–142.61	2040–0090
142.62	2040–0090
142.63–142.64	2040–0090
142.70–142.78	2040–0090
142.81–142.81	2040–0090
Underground Injection Control Program	
144.8	2040–0042
144.12	2040–0042
144.14–144.15	2040–0042
144.23	2040–0042
144.25–144.28	2040–0042
144.31–144.33	2040–0042
144.38	2040–0042
144.41	2040–0042
144.51–144.55	2040–0042
144.62–144.66	2040–0042
144.70	2040–0042
Underground Injection Control Program: Criteria and Standards	
146.10	2040–0042
146.12–146.15	2040–0042
146.22–146.25	2040–0042
146.32–146.35	2040–0042
146.52	2040–0042
146.64	2040–0042
146.66–146.73	2040–0042
State Underground Injection Control Programs	
147.104	2040–0042
147.304–147.305	2040–0042
147.504	2040–0042
147.754	2040–0042
147.904	2040–0042
147.1154	2040–0042
147.1354–147.1355	2040–0042
147.1454	2040–0042
147.1654	2040–0042
147.1954	2040–0042
147.2103–147.2104	2040–0042
147.2154	2040–0042
147.2402	2040–0042
147.2905	2040–0042
147.2912–147.2913	2040–0042
147.2915	2040–0042
147.2918	2040–0042
147.2920–147.2926	2040–0042
147.2929	2040–0042
147.3002–147.3003	2040–0042
147.3006–147.3007	2040–0042
147.3011	2040–0042
147.3014–147.3016	2040–0042
147.3101	2040–0042
147.3104–147.3105	2040–0042
147.3107–147.3109	2040–0042
Hazardous Waste Injection Restrictions	
148.5	2040–0042
148.20–148.23	2040–0042
Pesticide Registration and Classification Procedures	
152.46	2070–0060
152.50	2070–0024, 2070–0040 & 2070–0060
152.80	2070–0040 & 2070–0060
152.85	2070–0040 & 2070–0060
152.98	2070–0060
152.122	2070–0060
152.132	2070–0044
152.135	2070–0060
152.164	2070–0060
152.404	2070–0040 & 2070–0060
152.406	2070–0040 & 2070–0060
152.412	2070–0040 & 2070–0060
152.414	2070–0040 & 2070–0060
Registration Standards	
155.30	2070–0057
Labeling Requirements for Pesticides and Devices	
156.36	2070–0052
156.206	2070–0060
156.208	2070–0060
156.210	2070–0060
156.212	2070–0060
Packaging Requirements for Pesticides and Devices	
157.22	2070–0052
157.24	2070–0052
157.34	2070–0052
157.36	2070–0052
Data Requirements for Registration	
158.30	2070–0040, 2070–0057, 2070–0060 & 2070–0107
158.32	2070–0040, 2070–0053, 2070–0057, 2070–0060 & 2070–0107
158.34	2070–0040,

40 CFR citation	OMB control No.
	2070–0057, 2070–0060 & 2070–0107
158.45	2070–0040, 2070–0057, 2070–0060 & 2070–0107
158.75	2070–0040, 2070–0057, 2070–0060 & 2070–0107
158.101	2070–0040, 2070–0057, 2070–0060 & 2070–0107
158.155	2070–0040, 2070–0057, 2070–0060 & 2070–0107
158.160	2070–0040, 2070–0057, 2070–0060 & 2070–0107
158.162	2070–0040, 2070–0057, 2070–0060 & 2070–0107
158.165	2070–0040, 2070–0057, 2070–0060 & 2070–0107
158.167	2070–0040, 2070–0057, 2070–0060 & 2070–0107
158.170	2070–0040, 2070–0057, 2070–0060 & 2070–0107
158.175	2070–0040, 2070–0057, 2070–0060 & 2070–0107
158.180	2070–0040, 2070–0057, 2070–0060 & 2070–0107
158.190	2070–0040, 2070–0057, 2070–0060 & 2070–0107
158.240	2070–0057, 2070–0060 & 2070–0107
158.290	2070–0057, 2070–0060 & 2070–0107
158.340	2070–0057, 2070–0060 & 2070–0107
158.390	2070–0057, 2070–0060 & 2070–0107
158.440	2070–0057, 2070–0060 & 2070–0107
158.490	2070–0057, 2070–0060 & 2070–0107
158.540	2070–0057, 2070–0060 & 2070–0107
158.590	2070–0057, 2070–0060 & 2070–0107
158.640	2070–0057, 2070–0060 & 2070–0107
158.690	2070–0057, 2070–0060 & 2070–0107
158.740	2070–0057, 2070–0060 & 2070–0107
Good Laboratory Practice Standards	
Part 160	2070–0024, 2070–0032, 2070–0040, 2070–0055, 2070–0057, 2070–0060 & 2070–0107
State Registration of Pesticide Products	
162.153	2070–0055
Certification of Usefulness of Pesticide Chemicals	
163.4	2070–0060 & 2070–0024
163.5	2070–0060 & 2070–0024
Exemption of Federal and State Agencies for Use of Pesticides Under Emergency Conditions	
166.20	2070–0032
166.32	2070–0032
166.43	2070–0032
166.50	2070–0032
Registration of Pesticide and Active Ingredient Producing Establishments, Submission of Pesticide Reports	
Part 167	2070–0078
Statements of Enforcement Policies and Interpretations	
168.65	2070–0027
168.75	2070–0027
168.85	2070–0027, 2070–0028, & 2070–0078
Books and Records of Pesticide Production and Distribution	
169.2	2070–0028
Worker Protection Standards for Agricultural Pesticides	
170.112	2070–0060
Part 170	2070–0148

40 CFR citation	OMB control No.
Certification of Pesticide Applicators	
171.7	2070–0029
171.8	2070–0029
171.9	2070–0029
171.10	2070–0029
171.11	2070–0029
Experimental Use Permits	
172.4	2070–0040
172.8	2070–0040
Issuance of Food Additive Regulations	
177.81	2070–0024
177.92	2070–0024
177.98	2070–0024
177.99	2070–0024
177.102	2070–0024
177.105	2070–0024
177.110	2070–0024
177.116	2070–0024
Tolerances and Exemptions from Tolerances for Pesticide Chemicals in or on Raw Agricultural Commodities	
180.7	2070–0024
180.8	2070–0024
180.9	2070–0024
180.31	2070–0024
180.32	2070–0024
180.33	2070–0024
404 State Program Regulations	
233.10–233.12	2040–0168
233.21	2040–0168
233.30	2040–0168
233.50	2040–0168
233.52	2040–0168
233.61	2040–0140
Criteria for Municipal Solid Waste Landfills	
258.10–258.16	2050–0122
258.20	2050–0122
258.23	2050–0122
258.28–258.29	2050–0122
258.51	2050–0122
258.53–258.55	2050–0122
258.57–258.58	2050–0122
258.60–258.61	2050–0122
258.71–258.74	2050–0122
Hazardous Waste Management System: General	
260.20–260.22	2050–0053
260.23	2050–0145
260.31–260.33	2050–0053
Identification and Listing of Hazardous Waste	
261.3	2050–0085
261.4	2050–0053
261.35	2050–0115
Standards Applicable to Generators of Hazardous Waste	
262.12	2050–0028
262.20	2050–0039
262.22–262.23	2050–0039
262.34	2050–0035, 2050–0085
262.40(a)	2050–0039
262.40(b)	2050–0024
262.40(c)	2050–0035
262.41	2050–0024
262.42	2050–0039
262.43	2050–0035
262.44(a)–(b)	2050–0039
262.44(c)	2050–0035
262.53–262.57	2050–0035
262.60	2050–0035
Standards Applicable to Transporters of Hazardous Waste	
263.11	2050–0028
263.20–263.22	2050–0039
263.30	2050–0039
Standards for Owners and Operators of Hazardous Waste Treatment, Storage, and Disposal Facilities	
264.11	2050–0028
264.12 (a)	2050–0120
264.13	2050–0120 & 2050–0009
264.14	2050–0009
264.15	2050–0120 & 2050–0009
264.16	2050–0120 & 2050–0009
264.17	2050–0120
264.18	2050–0009
264.19	2050–0009
264.32	2050–0009
264.35	2050–0009
264.37	2050–0120
264.51	2050–0009
264.52	2050–0009
264.53	2050–0120
264.54	2050–0120
264.56	2050–0120
264.71	2050–0039
264.72	2050–0039
264.73	2050–0120
264.74	2050–0120
264.75	2050–0024
264.76	2050–0039
264.90	2050–0009
264.96	2050–0120
264.97 (g)	2050–0120
264.97 (h)	2050–0009
264.97 (j)	2050–0120
264.98 (c), (g)(1), (g)(5), (g)(6)	2050–0033
264.98 (g)(4), (h)	2050–0009
264.99 (c), (g), (h)(1), (i)(1), (i)(2)	2050–0033
264.99 (h)(2), (i)(3), (j)	2050–0009
264.100 (e), (f), (g)	2050–0033
264.100 (h)	2050–0009
264.101	2050–0120
264.112 (a), (b), (c)	2050–0009
264.112 (d)	2050–0120
264.113 (a), (b), (d)	2050–0120

40 CFR citation	OMB control No.
264.113 (e)	2050–0050
264.115	2050–0120
264.116	2050–0120
264.118	2050–0009
264.119 (a) & (b)	2050–0120
264.119 (c)	2050–0009
264.120	2050–0120
264.142 (a)	2050–0009
264.142 (b), (c), (d)	2050–0120
264.143	2050–0120
264.144 (a)	2050–0009
264.144 (b), (c), (d)	2050–0120
264.145	2050–0120
264.147 (a)(7), (b)(7), (f),(g)	2050–0120
264.147 (a)(1), (b)(1), (c), (f), (g), (h), (i), (j)	2050–0009
264.148	2050–0120
264.149	2050–0009
264.150	2050–0009
264.190	2050–0050
264.191	2050–0050
264.192 (a)	2050–0009
264.192 (g)	2050–0050
264.193 (c), (d), (e), (g), (h)	2050–0009
264.193 (i)	2050–0050
264.196	2050–0050
264.197 (b)	2050–0050
264.197 (c)	2050–0009
264.221	2050–0009
264.222 (a)	2050–0009
264.222 (b)	2050–0050
264.223 (a)	2050–0009
264.223 (b), (c)	2050–0050
264.226 (c)	2050–0050 & 2050–0009
264.226 (d)	2050–0050
264.227	2050–0050
264.231	2050–0009
264.251	2050–0009
264.252 (a)	2050–0009
264.252 (b)	2050–0050
264.253 (a)	2050–0009
264.253 (b), (c)	2050–0050
264.254	2050–0050
264.259	2050–0009
264.271	2050–0009
264.272	2050–0009
264.276	2050–0050 & 2050–0009
264.278 (a)–(f), (h)	2050–0050
264.278 (g)	2050–0050 & 2050–0009
264.280	2050–0050
264.283	2050–0009
264.301	2050–0009
264.302 (a)	2050–0009
264.302 (b)	2050–0050
264.303 (a)	2050–0009
264.303 (b)	2050–0050
264.304 (a)	2050–0009
264.304 (b), (c)	2050–0050
264.314	2050–0050
264.317	2050–0009
264.340	2050–0009
264.343	2050–0050
264.344	2050–0009
264.347	2050–0050
264.552	2050–0009
264.570	2050–0050
264.571	2050–0050
264.573	2050–0050
264.574	2050–0050
264.575	2050–0009
264.603	2050–0050
264.1033 (a)	2050–0009
264.1033 (j)	2050–0050
264.1034	2050–0050
264.1035	2050–0050
264.1036	2050–0050
264.1061	2050–0050
264.1062	2050–0050
264.1063	2050–0050
264.1064	2050–0050 & 2050–0009
264.1065	2050–0050
264.1089	2060–0318
264.1090	2060–0318
264.1100	2050–0050
264.1101	2050–0050

Interim Status Standards for Owners and Operators of Hazardous Waste Treatment, Storage, and Disposal Facilities

40 CFR citation	OMB control No.
265.11	2050–0028
265.12 (a)	2050–0120
265.13	2050–0120
265.15	2050–0120
265.16	2050–0120
265.19	2050–0120
265.37	2050–0120
265.51	2050–0120
265.52	2050–0120
265.53	2050–0120
265.54	2050–0120
265.56	2050–0120
265.71	2050–0039
265.72	2050–0039
265.73	2050–0120
265.75	2050–0024
265.76	2050–0039
265.90	2050–0033
265.92	2050–0033
265.93	2050–0033
265.94	2050–0033
265.112	2050–0120
265.113 (a), (b), (d)	2050–0120
265.113 (e)	2050–0050
265.115	2050–0120
265.116	2050–0120
265.118	2050–0120
265.119	2050–0120
265.120	2050–0120
265.142	2050–0120
265.143	2050–0120
265.144	2050–0120
265.145	2050–0120
265.147	2050–0120
265.148	2050–0120
265.149	2050–0120
265.150	2050–0120
265.190	2050–0035 & 2050–0050
265.191	2050–0035 & 2050–0050
265.192	2050–0035 & 2050–0050
265.193	2050–0035 & 2050–0050
265.195	2050–0120
265.196	2050–0035 & 2050–0050
265.197 (b)	2050–0050
265.197 (c)	2050–0120
265.221	2050–0050
265.222	2050–0050

40 CFR citation	OMB control No.
265.223	2050–0050
265.225	2050–0050
265.226	2050–0050
265.229	2050–0050
265.254	2050–0050
265.255	2050–0050
265.259	2050–0050
265.260	2050–0050
265.273	2050–0120
265.276	2050–0050
265.278	2050–0050
265.280	2050–0050
265.301	2050–0050
265.302	2050–0050
265.303	2050–0050
265.304	2050–0050
265.314	2050–0050
265.340	2050–0050
265.352	2050–0050
265.383	2050–0050
265.404	2050–0050
265.440	2050–0050
265.441	2050–0050
265.443	2050–0050
265.444	2050–0050
265.445	2050–0120
265.1033	2050–0050
265.1034	2050–0050
265.1035	2050–0050
265.1061	2050–0050
265.1062	2050–0050
265.1063	2050–0050
265.1064	2050–0050
265.1090	2060–0318
265.1100	2050–0050
265.1101	2050–0050
Standards for the Management of Specific Hazardous Wastes and Specific Types of Hazardous Waste Management Facilities	
266.70 (b)	2050–0028
266.70 (c)	2050–0050
266.80	2050–0028
266.100	2050–0073
266.102	2050–0073
266.103	2050–0073
266.104	2050–0073
266.106	2050–0073
266.107	2050–0073
266.108	2050–0073
266.109	2050–0073
266.111	2050–0073
266.112	2050–0073
Appendix IX	2050–0073
Land Disposal Restrictions	
268.4–268.5	2050–0085
268.6	2050–0062
268.7	2050–0085
268.9	2050–0085
268.42	2050–0085
268.44	2050–0085
EPA Administered Permit Programs: The Hazardous Waste Permit Program	
270.1	2050–0028 & 2050–0034 & 2050–0009
270.10	2050–0009
270.11	2050–0034
270.13	2050–0034
270.14	2050–0009
270.14 (b)(21)	2050–0062 & 2050–0085
270.15	2050–0009
270.16	2050–0009
270.17	2050–0009
270.18	2050–0009
270.19	2050–0009
270.20	2050–0009
270.21	2050–0009
270.22	2050–0073
270.23	2050–0009
270.24	2050–0009
270.25	2050–0009
270.26	2050–0115
270.30	2050–0120
270.33	2050–0009
270.40	2050–0009
270.41	2050–0009
270.42	2050–0009
270.51	2050–0009
270.62	2050–0009 & 2050–0149
270.63	2050–0009
270.65	2050–0009
270.66	2050–0073 & 2050–0149
270.72	2050–0034
270.73	2050–0009
Requirements for Authorization of State Hazardous Waste Programs	
271.5–271.8	2050–0041
271.20–271.21	2050–0041
271.23	2050–0041
Standards for Universal Waste Management	
273.14	2050–0145
273.15	2050–0145
273.18	2050–0145
273.32	2050–0145
273.34	2050–0145
273.35	2050–0145
273.38	2050–0145
273.39	2050–0145
273.61	2050–0145
273.62	2050–0145
273.80	2050–0145
Standards for Management of Used Oil	
279.10–279.11	2050–0124
279.42	2050–0028, 2050–0124
279.43–279.44	2050–0124
279.46	2050–0050
279.51	2050–0028
279.52–279.55	2050–0124
279.56	2050–0050
279.57	2050–0050, 2050–0124
279.62	2050–0028
279.63	2050–0124
279.65–279.66	2050–0050
279.72	2050–0050
279.73	2050–0028

40 CFR citation	OMB control No.
279.74–279.75	2050–0050
279.82	2050–0124
Technical Standards and Corrective Action Requirements for Owners and Operators of Underground Storage Tanks (USTs)	
280.11(a)	2050–0068
280.20(a)–(b)	2050–0068
280.20(e)	2050–0068
280.22(a)–(f)	2050–0068
280.22(g)	2050–0068
280.31	2050–0068
280.33(f)	2050–0068
280.34(a)	2050–0068
280.34(b)	2050–0068
280.34(c)	2050–0068
280.40	2050–0068
280.43	2050–0068
280.44	2050–0068
280.45	2050–0068
280.50	2050–0068
280.53	2050–0068
280.61	2050–0068
280.62	2050–0068
280.63	2050–0068
280.64	2050–0068
280.65	2050–0068
280.66(a)	2050–0068
280.66(c)	2050–0068
280.66(d)	2050–0068
280.67	2050–0068
280.71(a)	2050–0068
280.72(a)	2050–0068
280.74	2050–0068
280.95	2050–0068
280.96	2050–0068
280.97	2050–0068
280.98	2050–0068
280.99	2050–0068
280.100	2050–0068
280.101	2050–0068
280.102	2050–0068
280.103	2050–0068
280.104	2050–0068
280.105	2050–0068
280.106	2050–0068
280.107	2050–0068
280.108	2050–0068
280.109(a)	2050–0068
280.109(b)	2050–0068
280.110	2050–0068
280.111	2050–0068
280.111(b)(11)	2050–0068
280.114(a)–(d)	2050–0068
280.114(e)	2050–0068
Approval of State Underground Storage Tank Programs	
281.120(a)	2050–0068
281.120(g)	2050–0068
281.121	2050–0068
281.122	2050–0068
281.124	2050–0068
281.125	2050–0068
281.140	2050–0068
281.143(a)	2050–0068
281.150	2050–0068
281.152	2050–0068
281.161	2050–0068

40 CFR citation	OMB control No.
National Oil and Hazardous Substances Pollution Contingency Plan	
300.405	2050–0046
300.425	2050–0095
300.430	2050–0096
300.435	2050–0096
300.920	2050–0141
Part 300, Appendix A	2050–0095
Designation, reportable quantities, and notification	
302.4	2050–0046
302.6	2050–0046
302.8	2050–0086
Hazardous Substances Superfund; Response Claims Procedures	
307.11–307.14	2050–0106
307.21–307.23	2050–0106
307.30–307.32	2050–0106
Reimbursement to Local Governments for Emergency Response to Hazardous Substance Releases	
310.05	2050–0077
310.10–310.12	2050–0077
310.20	2050–0077
310.30	2050–0077
310.40	2050–0077
310.50	2050–0077
310.60	2050–0077
310.70	2050–0077
310.80	2050–0077
310.90	2050–0077
Part 310, Appendix II	2050–0077
Worker Protection Standards for Hazardous Waste Operations and Emergency Response	
311.1–311.2	2050–0105
Trade Secrecy Claims for Emergency Planning and Community Right-to-Know; Health Professionals	
350.5–350.16	2050–0078
350.27	2050–0078
350.40	2050–0078
Emergency planning and notification	
Part 355, Appendix A, Appendix B	2050–0046
Toxic Chemical Release Reporting: Community Right–to–Know	
Part 372	2070–0093
Part 372, subpart A	2070-0093 & 2070-0143
372.22	2070-0093 & 2070-0143
372.25	2070-0093
372.27	2070-0143
372.30	2070-0093 & 2070-0143

40 CFR citation	OMB control No.
372.38	2070-0093 & 2070-0143
Part 372, subpart C	2070-0093 & 2070-0143
Part 372, subpart D	2070-0093 & 2070-0143
372.85	2070-0093
372.95	2070-0143
General Pretreatment Regulations for Existing and New Sources of Pollution	
403.5(b)	2040–0009
403.6–403.7	2040–0009
403.8(a)–(e)	2040–0009
403.8(f)	2040–0009
403.9–403.10	2040–0009
403.12(b)–(g)	2040–0009
403.12 (h), (i)	2040–0009
403.12 (j), (k), (l), (o)	2040–0009
403.12 (m), (p)	2040–0009
403.13	2040–0009
403.15	2040–0009
403.17–403.18	2040–0009, 2040–0170
Steam Electric Generating Point Source Category	
423.12–423.13	2040–0033
423.15	2040–0033
Pulp, Paper, and Paperboard Point Source Category	
430.14–430.17	2040–0033
430.24–430.27	2040–0033
430.54–430.57	2040–0033
430.64–430.67	2040–0033
430.74–430.77	2040–0033
430.84–430.87	2040–0033
430.94–430.97	2040–0033
430.104–430.107	2040–0033
430.114–430.117	2040–0033
430.134–430.137	2040–0033
430.144–430.147	2040–0033
430.154–430.157	2040–0033
430.164–430.167	2040–0033
430.174–430.177	2040–0033
430.184–430.187	2040–0033
430.194–430.197	2040–0033
430.204–430.207	2040–0033
430.214–430.217	2040–0033
430.224–430.227	2040–0033
430.234–430.237	2040–0033
430.244–430.247	2040–0033
430.254–430.257	2040–0033
430.264–430.267	2040–0033
The Builders' Paper and Board Mills Point Source Category	
431.14–431.17	2040–0033
Pharmaceutical Manufacturing Point Source Category	
439.14–439.17	2040–0033
439.24–439.27	2040–0033
439.34–439.37	2040–0033
439.44–439.47	2040–0033

40 CFR citation	OMB control No.
Coil Coating Point Source Category	
465.03	2040–0033
Porcelain Enameling Point Source Category	
466.03	2040–0033
Aluminum Forming Point Source Category	
467.03	2040–0033
State Sludge Management Program Requirements	
501.15(a)	2040–0086, 2040–0110
501.15(b)	2040–0004, 2040–0068, 2040–0110
501.15(c)	2040–0068
501.16	2040–0057
501.21	2040–0057
Standards for the Use or Disposal of Sewage Sludge	
503.17–503.18	2040–0157
503.27–503.28	2040–0157
503.47–503.48	2040–0157
Fuel Economy of Motor Vehicles	
600.006–86	2060–0104
600.007–80	2060–0104
600.010–86	2060–0104
600.113–88	2060–0104
600.113–93	2060–0104
600.206–86	2060–0104
600.207–86	2060–0104
600.209–85	2060–0104
600.306–86	2060–0104
600.307–86	2060–0104
600.311–86	2060–0104
600.312–86	2060–0104
600.313–86	2060–0104
600.314–86	2060–0104
600.507–86	2060–0104
600.509–86	2060–0104
600.510–86	2060–0104
600.512–86	2060–0104
Toxic Substances Control Act: General	
700.45	2070–0012 & 2070–0038
Reporting and Recordkeeping Requirements	
704.5	2010–0019 & 2070–0067
704.11	2010–0019 & 2070–0067
704.25	2070–0067
704.33	2070–0067
704.43	2070–0067
704.45	2070–0067
704.95	2070–0067
704.102	2070–0067

40 CFR citation	OMB control No.
704.104	2070–0067
704.175	2070–0067
Chemical Imports and Exports	
707.65	2070–0030
707.67	2070–0030
707.72	2070–0030
Inventory Reporting Regulations	
Part 710	2070–0070
Chemical Information Rules	
712.5	2070–0054
712.7	2070–0054
712.20	2070–0054
712.28	2070–0054
712.30	2070–0054
Health and Safety Data Reporting	
716.5	2070–0004
716.10	2070–0004
716.20	2070–0004
716.25	2070–0004
716.30	2070–0004
716.35	2070–0004
716.40	2070–0004
716.45	2070–0004
716.50	2070–0004
716.60	2070–0004
716.65	2070–0004
716.105	2070–0004
716.120	2070–0004
Records and Reports of Allegations that Chemical Substances Cause Significant Adverse Reactions to Health or the Environment	
717.5	2070–0017
717.7	2070–0017
717.12	2070–0017
717.15	2070–0017
717.17	2070–0017
Premanufacture Notification	
720.1	2070–0012
720.22	2070–0012
720.25	2070–0012
720.30	2070–0012
720.36	2070–0012
720.38	2070–0012
Part 720, subpart C	2070–0012
720.62	2070–0012
720.75	2070–0012
720.78	2070–0012
720.80	2070–0012
720.85	2070–0012
720.87	2070–0012
720.90	2070–0012
720.102	2070–0012
Part 720, Appendix A	2070–0012

40 CFR citation	OMB control No.
Significant New Uses of Chemical Substances	
Part 721, subpart A	2070–0012 & 2070–0038
721.72	2070–0012 & 2070–0038
721.125	2070–0012 & 2070–0038
721.160	2070–0012 & 2070–0038
721.170	2070–0012 & 2070–0038
721.185	2070–0012 & 2070–0038
721.225	2070–0012
721.275	2070–0012
721.285	2070–0012
721.320	2070–0012
721.323	2070–0012
721.325	2070–0012
721.370	2070–0012
721.390	2070–0012
721.400	2070–0012
721.415	2070–0012
721.430	2070–0012
721.445	2070–0012
721.460	2070–0012
721.470	2070–0012
721.490	2070–0012
721.505	2070–0012
721.520	2070–0012
721.530	2070–0012
721.536	2070–0012
721.540	2070–0012
721.550	2070–0012
721.562	2070-0012
721.575	2070–0012
721.600	2070–0012
721.625	2070–0012
721.639	2070-0012
721.642	2070–0012
721.650	2070–0038
721.700	2070–0012
721.715	2070–0012
721.750	2070–0012
721.757	2070–0012
721.775	2070–0012
721.805	2070–0012
721.825	2070–0012
721.840	2070–0012
721.875	2070–0012
721.925	2070–0012
721.950	2070–0012
721.982	2070–0012
721.1000	2070–0012
721.1025	2070–0038
721.1050	2070–0012
721.1068	2070–0012
721.1075	2070–0012
721.1120	2070–0012
721.1150	2070–0012
721.1175	2070–0012
721.1187	2070–0012
721.1193	2070-0012
721.1210	2070–0012
721.1225	2070–0012
721.1240	2070–0012
721.1300	2070–0012
721.1325	2070–0012
721.1350	2070–0012
721.1372	2070–0012
721.1375	2070–0012
721.1425	2070–0038

40 CFR citation	OMB control No.
721.1430	2070–0038
721.1435	2070–0038
721.1440	2070–0038
721.1450	2070–0012
721.1500	2070–0012
721.1525	2070–0012
721.1550	2070–0012
721.1555	2070–0012
721.1568	2070–0012
721.1575	2070–0012
721.1612	2070–0012
721.1625	2070–0012
721.1630	2070–0012
721.1637	2070–0012
721.1640	2070–0012
721.1643	2070-0012
721.1645	2070–0012
721.1650	2070–0012
721.1675	2070–0012
721.1700	2070–0012
721.1725	2070–0012
721.1728	2070–0012
721.1732	2070–0012
721.1735	2070–0012
721.1740	2070–0012
721.1745	2070–0012
721.1750	2070–0012
721.1755	2070–0012
721.1765	2070–0012
721.1769	2070–0012
721.1775	2070–0012
721.1790	2070–0038
721.1800	2070–0012
721.1820	2070–0012
721.1825	2070–0012
721.1850	2070–0012
721.1875	2070–0012
721.1900	2070–0012
721.1907	2070–0012
721.1920	2070–0012
721.1925	2070–0012
721.1950	2070–0012
721.2025	2070–0012
721.2050	2070–0012
721.2075	2070–0012
721.2084	2070–0038
721.2085	2070–0012
721.2086	2070–0012
721.2088	2070–0012
721.2089	2070-0012
721.2092	2070–0038
721.2120	2070–0012
721.2140	2070–0012
721.2170	2070–0012
721.2175	2070–0012
721.2250	2070–0012
721.2260	2070–0012
721.2270	2070–0012
721.2275	2070–0012
721.2287	2070–0038
721.2340	2070–0012
721.2355	2070–0038
721.2380	2070–0012
721.2410	2070–0012
721.2420	2070–0012
721.2475	2070–0012
721.2520	2070–0012
721.2540	2070–0012
721.2560	2070–0012
721.2565	2070–0012
721.2575	2070–0012
721.2600	2070–0038
721.2625	2070–0012
721.2650	2070–0012
721.2675	2070–0012
721.2725	2070–0038
721.2750	2070–0012
721.2800	2070–0038
721.2815	2070-0012
721.2825	2070–0012
721.2840	2070–0012
721.2860	2070–0012
721.2880	2070–0012
721.2900	2070–0012
721.2920	2070–0012
721.2930	2070–0012
721.2940	2070–0012
721.2950	2070–0012
721.2980	2070–0012
721.3000	2070–0012
721.3020	2070–0012
721.3028	2070–0012
721.3034	2070–0012
721.3040	2070–0012
721.3060	2070–0012
721.3080	2070–0012
721.3100	2070–0012
721.3120	2070–0012
721.3140	2070–0012
721.3152	2070-0012
721.3160	2070–0038
721.3180	2070–0012
721.3200	2070–0012
721.3220	2070–0038
721.3248	2070–0012
721.3260	2070–0012
721.3320	2070–0012
721.3340	2070–0012
721.3350	2070–0038
721.3360	2070–0012
721.3364	2070–0012
721.3374	2070–0012
721.3380	2070–0012
721.3390	2070–0012
721.3420	2070–0012
721.3430	2070–0038
721.3435	2070–0012
721.3437	2070–0012
721.3440	2070–0012
721.3460	2070–0012
721.3480	2070–0012
721.3486	2070-0012
721.3500	2070–0012
721.3520	2070–0012
721.3560	2070–0012
721.3620	2070–0012
721.3625	2070–0012
721.3627	2070–0012
721.3629	2070–0012
721.3640	2070–0012
721.3680	2070–0012
721.3700	2070–0012
721.3720	2070–0012
721.3740	2070–0012
721.3760	2070-0012
721.3764	2070–0012
721.3780	2070–0012
721.3790	2070–0012
721.3800	2070–0012
721.3815	2070–0012
721.3840	2070–0012
721.3860	2070–0012
721.3870	2070–0012
721.3880	2070–0012
721.3900	2070–0012
721.4000	2070–0012

40 CFR citation	OMB control No.
721.4020	2070–0012
721.4040	2070–0012
721.4060	2070–0012
721.4080	2070–0038
721.4100	2070–0012
721.4110	2070–0012
721.4128	2070–0012
721.4133	2070–0012
721.4140	2070–0038
721.4155	2070–0038
721.4160	2070–0038
721.4180	2070–0038
721.4200	2070–0012
721.4215	2070–0012
721.4220	2070–0012
721.4240	2070–0012
721.4250	2070–0012
721.4255	2070–0012
721.4260	2070–0012
721.4270	2070–0012
721.4280	2070–0012
721.4300	2070–0012
721.4320	2070–0012
721.4340	2070–0012
721.4360	2070–0038
721.4380	2070–0012
721.4390	2070–0012
721.4400	2070–0012
721.4420	2070–0012
721.4460	2070–0012
721.4463	2070-0012
721.4466	2070-0012
721.4470	2070–0012
721.4473	2070-0012
721.4480	2070–0012
721.4490	2070–0012
721.4500	2070–0012
721.4520	2070–0012
721.4550	2070–0012
721.4568	2070–0012
721.4585	2070–0012
721.4590	2070–0012
721.4594	2070–0012
721.4600	2070–0012
721.4620	2070–0012
721.4640	2070–0012
721.4660	2070–0012
721.4680	2070–0012
721.4700	2070–0012
721.4720	2070–0012
721.4740	2070–0038
721.4780	2070–0012
721.4790	2070–0012
721.4794	2070–0012
721.4800	2070–0012
721.4820	2070–0012
721.4840	2070–0012
721.4880	2070–0012
721.4925	2070–0038
721.5050	2070–0012
721.5075	2070–0012
721.5175	2070–0038
721.5192	2070-0012
721.5200	2070–0012
721.5225	2070–0012
721.5250	2070–0012
721.5275	2070–0012
721.5278	2070-0012
721.5282	2070-0012
721.5285	2070–0012
721.5300	2070–0012
721.5310	2070–0012
721.5325	2070–0012
721.5330	2070–0012
721.5350	2070–0012
721.5375	2070–0012
721.5385	2070–0012
721.5400	2070–0012
721.5425	2070–0012
721.5450	2070–0012
721.5475	2070–0012
721.5500	2070–0012
721.5525	2070–0012
721.5540	2070–0012
721.5550	2070–0012
721.5575	2070–0012
721.5600	2070–0038
721.5700	2070–0012
721.5705	2070–0012
721.5710	2070–0038
721.5740	2070–0012
721.5760	2070–0012
721.5763	2070-0012
721.5769	2070-0012
721.5780	2070–0012
721.5800	2070–0012
721.5820	2070–0012
721.5840	2070–0012
721.5860	2070–0012
721.5867	2070-0012
721.5880	2070–0012
721.5900	2070–0012
721.5910	2070–0012
721.5915	2070–0012
721.5920	2070–0012
721.5960	2070–0012
721.5970	2070–0012
721.5980	2070–0012
721.5990	2070–0012
721.6000	2070–0038
721.6020	2070–0012
721.6060	2070–0012
721.6070	2070–0012
721.6080	2070–0012
721.6085	2070–0012
721.6090	2070–0012
721.6100	2070–0012
721.6110	2070-0012
721.6120	2070–0012
721.6140	2070–0012
721.6160	2070–0012
721.6180	2070–0012
721.6186	2070–0012
721.6200	2070–0012
721.6220	2070–0012
721.6440	2070–0012
721.6470	2070–0012
721.6500	2070–0012
721.6520	2070–0012
721.6540	2070–0012
721.6560	2070–0012
721.6580	2070–0012
721.6600	2070–0012
721.6620	2070–0012
721.6625	2070–0012
721.6640	2070–0012
721.6660	2070–0012
721.6680	2070–0012
721.6700	2070–0012
721.6720	2070–0012
721.6740	2070–0012
721.6760	2070–0012
721.6780	2070–0012
721.6820	2070–0012
721.6840	2070–0012
721.6880	2070–0012

40 CFR citation	OMB control No.
721.6900	2070–0012
721.6920	2070–0012
721.6940	2070–0012
721.6960	2070–0012
721.6980	2070–0012
721.7000	2070–0012
721.7020	2070–0012
721.7040	2070–0012
721.7046	2070-0012
721.7080	2070–0012
721.7100	2070–0012
721.7140	2070–0012
721.7160	2070–0012
721.7180	2070–0012
721.7200	2070–0012
721.7210	2070–0012
721.7220	2070–0012
721.7240	2070–0012
721.7260	2070–0012
721.7280	2070–0012
721.7300	2070–0012
721.7320	2070–0012
721.7340	2070–0012
721.7360	2070–0012
721.7370	2070–0012
721.7400	2070–0012
721.7420	2070–0012
721.7440	2070–0012
721.7450	2070–0012
721.7460	2070–0012
721.7480	2070–0012
721.7500	2070–0012
721.7540	2070–0012
721.7560	2070–0012
721.7580	2070–0012
721.7600	2070–0012
721.7620	2070–0012
721.7655	2070–0012
721.7660	2070–0012
721.7680	2070–0012
721.7780	2070–0012
721.7710	2070–0012
721.7720	2070–0012
721.7700	2070–0012
721.7740	2070–0012
721.7760	2070–0012
721.7770	2070–0012
721.8075	2070–0012
721.8082	2070–0012
721.8090	2070-0012
721.8100	2070–0012
721.8155	2070–0012
721.8160	2070–0012
721.8170	2070–0012
721.8175	2070–0012
721.8225	2070–0012
721.8250	2070–0012
721.8265	2070–0012
721.8275	2070–0012
721.8290	2070–0012
721.8300	2070–0012
721.8325	2070–0012
721.8335	2070–0012
721.8350	2070–0012
721.8375	2070–0012
721.8400	2070–0012
721.8425	2070–0012
721.8450	2070–0012
721.8475	2070–0012
721.8500	2070–0012
721.8525	2070–0012
721.8550	2070–0012
721.8575	2070–0012
721.8600	2070–0012
721.8650	2070–0012
721.8654	2070–0012
721.8670	2070–0012
721.8675	2070–0012
721.8700	2070–0012
721.8750	2070–0012
721.8775	2070–0012
721.8825	2070–0012
721.8850	2070–0012
721.8875	2070–0012
721.8900	2070–0012
721.8965	2070–0012
721.9000	2070–0038
721.9075	2070–0012
721.9100	2070–0012
721.9220	2070–0012
721.9240	2070–0012
721.9260	2070–0012
721.9280	2070–0012
721.9300	2070–0012
721.9320	2070–0012
721.9360	2070–0012
721.9400	2070–0012
721.9420	2070–0012
721.9460	2070–0012
721.9470	2070–0038
721.9480	2070–0012
721.9500	2070–0012
721.9505	2070–0012
721.9510	2070–0012
721.9520	2070–0012
721.9525	2070–0012
721.9526	2070-0012
721.9527	2070–0012
721.9530	2070–0012
721.9540	2070–0012
721.9550	2070–0012
721.9570	2070–0012
721.9580	2070–0038
721.9620	2070–0012
721.9630	2070–0012
721.9650	2070–0012
721.9656	2070-0012
721.9658	2070-0012
721.9660	2070–0038
721.9665	2070–0012
721.9675	2070–0012
721.9700	2070–0012
721.9720	2070–0012
721.9730	2070–0012
721.9740	2070–0012
721.9750	2070–0012
721.9780	2070–0012
721.9800	2070–0012
721.9820	2070–0012
721.9850	2070–0012
721.9870	2070–0012
721.9892	2070-0012
721.9900	2070–0012
721.9920	2070–0012
721.9925	2070–0012
721.9930	2070–0038
721.9940	2070–0012
721.9957	2070–0038
721.9975	2070–0012

Premanufacture Notification Exemptions

723.50	2070–0012
723.175	2070–0012
723.250(m)(1)	2070–0012

40 CFR citation	OMB control No.
Lead-Based Paint Poisioning Prevention in Certain Residential Structures	
Part 745, subpart F	2070-0151
Water Treatment Chemicals	
Part 749, subpart D	2060–0193
749.68	2060–0193
Polychlorinated Biphenyls (PCBs) Manufacturing, Processing, Distribution in Commerce, and Use Prohibitions	
761.20	2070–0008 & 2070–0021
761.30	2070–0003, 2070–0008 & 2070–0021
761.60	2070–0011
761.65	2070–0112
761.70	2070–0011
761.75	2070–0011
761.80	2070–0021
761.93(a)(1)(iii)	2070–0149
761.93(b)	2070–0149
761.125	2070–0112
761.180	2070–0112
761.185	2070–0008
761.187	2070–0008
761.193	2070–0008
761.202	2070–0112
761.205	2070–0112
761.207	2070–0112
761.207(a)	2050–0039
761.208	2070–0112
761.209	2070–0112
761.210	2070–0112
761.211	2070–0112
761.215	2070–0112
761.218	2070–0112
Asbestos	
Part 763, subpart E	2070–0091
Part 763, subpart G	2070–0072
Part 763, subpart I	2070–0082
Dibenzo–para–dioxin/Dibenzofurans	
766.35(b)(1)	2070–0054
766.35(b)(2)	2070–0054
766.35(b)(3)	2070–0017
766.35(b)(4)(iii)	2070–0054
766.35(c)(1)(i)	2070–0054
766.35(c)(1)(ii)	2070–0054
766.35(c)(1)(iii)	2070–0017
766.35(d) Form	2070–0017
766.38	2070–0054
Procedures Governing Testing Consent Agreements and Test Rules	
790.5	2070–0033
790.42	2070–0033
790.45	2070–0033
790.50	2070–0033
790.55	2070–0033
790.60	2070–0033
790.62	2070–0033
790.68	2070–0033
790.80	2070–0033
790.82	2070–0033
790.85	2070–0033
790.99	2070–0033
Good Laboratory Practice Standards	
Part 792	2010–0019, 2070–0004, 2070–0017, 2070–0033, 2070–0054 & 2070–0067
Provisional Test Guidelines	
795.45	2070–0067
795.232	2070–0033
Identification of Specific Chemical Substance and Mixture Testing Requirements	
799.1053	2070–0033
799.1250	2070–0033
799.1560	2070–0033
799.1575	2070–0033
799.1645	2070–0033
799.1700	2070–0033
799.2155	2070–0033
799.2325	2070–0033
799.2475	2070–0033
799.2500	2070–0033
799.2700	2070–0033
799.3300	2070–0033
799.4360	2070–0033
799.4440	2070–0033
799.5000	2070–0033
799.5025	2070–0033
799.5050	2070–0033
799.5055	2070–0033
799.5075	2070–0033

[1] The ICRs referenced in this section of the Table encompass the applicable general provisions contained in 40 CFR part 60, subpart A, which are not independent information collection requirements.

[2] The ICRs referenced in this section of the Table encompass the applicable general provisions contained in 40 CFR part 61, subpart A, which are not independent information collection requirements.

[3] The ICRs referenced in this section of the Table encompass the applicable general provisions contained in 40 CFR part 63, subpart A, which are not independent information collection requirements.

[58 FR 27472, May 10, 1993]

EDITORIAL NOTE: For Federal Register citations affecting §9.1 see the List of CFR Sections Affected in the Finding Aids section of this volume.

EFFECTIVE DATE NOTES: 1. At 61 FR 16309, Apr. 12, 1996, in §9.1 table, the heading ''Public Information'' and its entry for part 2, subpart B were added, effective July 11, 1996.

2. At 61 FR 33206, June 26, 1996, in §9.1 table, the entry for 170.112 was removed and the entry for part 170 was added, effective Aug. 26, 1996.

3. At 61 FR 34228, July 1, 1996, in § 9.1 table, entries 71.5, 71.6(a),(c),(d),(g), 71.7, and 71.9(e)–(j) were added, effective July 31, 1996.

PART 10—ADMINISTRATIVE CLAIMS UNDER FEDERAL TORT CLAIMS ACT

Subpart A—General

Sec.
10.1 Scope of regulations.

Subpart B—Procedures

10.2 Administrative claim; when presented; place of filing.
10.3 Administrative claims; who may file.
10.4 Evidence to be submitted.
10.5 Investigation, examination, and determination of claims.
10.6 Final denial of claim.
10.7 Payment of approved claim.
10.8 Release.
10.9 Penalties.
10.10 Limitation on Environmental Protection Agency's authority.
10.11 Relationship to other agency regulations.

AUTHORITY: Sec. 1, 80 Stat. 306; 28 U.S.C. 2672; 28 CFR Part 14.

SOURCE: 38 FR 16868, June 27, 1973, unless otherwise noted.

Subpart A—General

§ 10.1 Scope of regulations.

The regulations in this part apply only to claims asserted under the Federal Tort Claims Act, as amended, 28 U.S.C. 2671–2680, for money damages against the United States because of damage to or loss of property or personal injury or death, caused by the negligent or wrongful act or omission of any employee of the Environmental Protection Agency (EPA) while acting within the scope of his/her employment.

[51 FR 25832, July 16, 1986]

Subpart B—Procedures

§ 10.2 Administrative claim; when presented; place of filing.

(a) For purpose of the regulations in this part, a claim shall be deemed to have been presented when the Environmental Protection Agency receives, at a place designated in paragraph (c) of this section, an executed Standard Form 95 or other written notification of an incident accompanied by a claim for money damages in a sum certain for damage to or loss of property, for personal injury, or for death, alleged to have occurred by reason of the incident. A claim which should have been presented to EPA, but which was mistakenly addressed to or filed with another Federal agency, shall be deemed to be presented to EPA as of the date that the claim is received by EPA. A claim mistakenly addressed to or filed with EPA shall forthwith be transferred to the appropriate Federal agency, if ascertainable, or returned to the claimant.

(b) A claim presented in compliance with paragraph (a) of this section may be amended by the claimant at any time prior to final action by the Administrator, or his designee, or prior to the exercise of the claimant's option to bring suit under 28 U.S.C. 2675(a). Amendments shall be submitted in writing and signed by the claimant or his duly authorized agent or legal representative. Upon the timely filing of an amendment to a pending claim, EPA shall have 6 months in which to make a final disposition of the claim as amended and the claimant's option under 28 U.S.C. 2675(a) shall not accrue until 6 months after the filing of an amendment.

(c) Forms may be obtained and claims may be filed with the EPA office having jurisdiction over the employee involved in the accident or incident, or with the EPA Claims Officer, Office of General Counsel (LE–132G), 401 M Street SW., Washington, DC 20460.

[38 FR 16868, June 27, 1973, as amended at 51 FR 25832, July 16, 1986]

§ 10.3 Administrative claims; who may file.

(a) A claim for injury to or loss of property may be presented by the owner of the property interest which is the subject of the claim, his duly authorized agent, or his legal representative.

(b) A claim for personal injury may be presented by the injured person, his duly authorized agent, or his legal representative.

(c) A claim based on death may be presented by the executor or administrator of the decedent's estate or by any other person legally entitled to assert such a claim under applicable State law.

(d) A claim for loss wholly compensated by an insurer with the rights of a subrogee may be presented by the insurer. A claim for loss partially compensated by an insurer with the rights of a subrogee may be presented by the insurer or the insured individually as their respective interests appear, or jointly. Whenever an insurer presents a claim asserting the rights of a subrogee, he shall present with his claim appropriate evidence that he has the rights of a subrogee.

(e) A claim presented by an agent or legal representative shall be presented in the name of the claimant, be signed by the agent or legal representative, show the title or legal capacity of the person signing, and be accompanied by evidence of his authority to present a claim on behalf of the claimant as agent, executor, administrator, parent, guardian, or other representative.

§10.4 Evidence to be submitted.

(a) *Death*. In support of a claim based on death, the claimant may be required to submit the following evidence or information:

(1) An authenticated death certificate or other competent evidence showing cause of death, date of death, and age of the decedent.

(2) Decedent's employment or occupation at time of death, including his monthly or yearly salary or earnings (if any), and the duration of his last employment or occupation.

(3) Full names, addresses, birth dates, kinship, and marital status of the decedent's survivors, including identification of those survivors who were dependent for support upon the decedent at the time of his death.

(4) Degree of support afforded by the decendent to each survivor dependent upon him for support at the time of his death.

(5) Decedent's general physical and mental condition before death.

(6) Itemized bills for medical and burial expenses incurred by reason of the incident causing death, or itemized receipts of payments for such expenses.

(7) If damages for pain and suffering prior to death are claimed, a physician's detailed statement specifying the injuries suffered, duration of pain and suffering, any drugs administered for pain and the decedent's physical condition in the interval between injury and death.

(8) Any other evidence or information which may have a bearing on either the responsibility of the United States for the death or the damages claimed.

(b) *Personal Injury*. In support of a claim for personal injury, including pain and suffering, the claimant may be required to submit the following evidence or information:

(1) A written report by his attending physician or dentist setting forth the nature and extent of the injury, nature and extent of treatment, any degree of temporary or permanent disability, the prognosis, period of hospitalization, and any diminished earning capacity. In addition, the claimant may be required to submit to a physical or mental examination by a physician employed or designated by EPA. A copy of the report of the examining physician shall be made available to the claimant upon the claimant's written request provided that the claimant has, upon request, furnished the report referred to in the first sentence of this subparagraph and has made or agrees in writing to make available to EPA any other physician's reports previously or thereafter made of the physical or mental condition which is the subject matter of his claim.

(2) Itemized bills for medical, dental, hospital and related expenses incurred, or itemized receipts of payment for such expenses.

(3) If the prognosis reveals the necessity for future treatment, a statement of expected duration of and expenses for such treatment.

(4) If a claim is made for loss of time from employment, a written statement from his employer showing actual time lost from employment, whether he is a full or part-time employee, and wages or salary actually lost.

(5) If a claim is made for loss of income and the claimant is self-employed, documentary evidence showing the amount of earnings actually lost.

(6) Any other evidence or information which may have a bearing on the responsibility of the United States for either the personal injury or the damages claimed.

(c) *Property Damage.* In support of a claim for damage to or loss of property, real or personal, the claimant may be required to submit the following evidence or information:

(1) Proof of ownership.

(2) A detailed statement of the amount claimed with respect to each item of property.

(3) An itemized receipt of payment for necessary repairs or itemized written estimates of the cost of such repairs.

(4) A statement listing date of purchase, purchase price, market value of the property as of date of damage, and salvage value, where repair is not economical.

(5) Any other evidence or information which may have a bearing on the responsibility of the United States either for the injury to or loss of property or for the damage claimed.

(d) *Time limit.* All evidence required to be submitted by this section shall be furnished by the claimant within a reasonable time. Failure of a claimant to furnish evidence necessary to a determination of his claim within three months after a request therefor has been mailed to his last known address may be deemed an abandonment of the claim. The claim may be thereupon disallowed.

§ 10.5 Investigation, examination, and determination of claims.

The EPA Claims Officer adjusts, determines, compromises and settles all administrative tort claims filed with EPA. In carrying out these functions, the EPA Claims Officer makes such investigations as are necessary for a determination of the validity of the claim. The decision of the EPA Claims Officer is a final agency decision of purposes of 28 U.S.C. 2675.

[51 FR 25832, July 16, 1986]

§ 10.6 Final denial of claim.

(a) Final denial of an administrative claim shall be in writing and sent to the claimant, his attorney, or legal representative by certified or registered mail. The notification of final denial may include a statement of the reasons for the denial and shall include a statement that, if the claimant is dissatisfied with EPA's action, he may file suit in an appropriate U.S. District Court not later than 6 months after the date of mailing of the notification.

(b) Prior to the commencement of suit and prior to the expiration of the 6-month period after the date of mailing by certified or registered mail of notice of final denial of the claim as provided in 28 U.S.C. 2401(b), a claimant, his duly authorized agent, or legal representative, may file a written request with the EPA for reconsideration of a final denial of a claim under paragraph (a) of this section. Upon the timely filing of a request for reconsideration, EPA shall have 6 months from the date of filing in which to make a final disposition of the claim and the claimant's option under 28 U.S.C. 2675(a) to bring suit shall not accrue until 6 months after the filing of a request for reconsideration. Final action on a request for reconsideration shall be effected in accordance with the provisions of paragraph (a) of this section.

§ 10.7 Payment of approved claim.

(a) Upon allowance of his claim, claimant or his duly authorized agent shall sign the voucher for payment, Standard Form 1145, before payment is made.

(b) When the claimant is represented by an attorney, the voucher for payment (SF 1145) shall designate both the claimant and his attorney as ''payees.'' The check shall be delivered to the attorney whose address shall appear on the voucher.

(c) No attorney shall charge fees in excess of 25 percent of a judgment or settlement after litigation, or in excess of 20 percent of administrative settlements (28 U.S.C. 2678).

§ 10.8 Release.

Acceptance by the claimant, his agent or legal representative of any award, compromise or settlement made

hereunder, shall be final and conclusive on the claimant, his agent or legal representative and any other person on whose behalf or for whose benefit the claim has been presented, and shall constitute a complete release of all claims against either the United States or any employee of the Government arising out of the same subject matter.

§ 10.9 Penalties.

A person who files a false claim or makes a false or fraudulent statement in a claim against the United States may be liable to a fine of not more than $10,000 or to imprisonment of not more than 5 years, or both (18 U.S.C. 287,1001), and, in addition, to a forfeiture of $2,000 and a penalty of double the loss or damage sustained by the United States (31 U.S.C. 3729).

[38 FR 16868, June 27, 1973, as amended at 51 FR 25832, July 16, 1986]

§ 10.10 Limitation on Environmental Protection Agency's authority.

(a) An award, compromise or settlement of a claim hereunder in excess of $25,000 shall be effected only with the prior written approval of the Attorney General or his designee. For the purposes of this paragraph, a principal claim and any derivative or subrogated claim shall be treated as a single claim.

(b) An administrative claim may be adjusted, determined, compromised or settled hereunder only after consultation with the Department of Justice when, in the opinion of the Environmental Protection Agency:

(1) A new precedent or a new point of law is involved; or

(2) A question of policy is or may be involved; or

(3) The United States is or may be entitled to indemnity or contribution from a third party and the Agency is unable to adjust the third party claim; or

(4) The compromise of a particular claim, as a practical matter, will or may control the disposition of a related claim in which the amount to be paid may exceed $25,000.

(c) An administrative claim may be adjusted, determined, compromised, or settled by EPA hereunder only after consultation with the Department of Justice when EPA is informed or is otherwise aware that the United States or an employee, agent, or cost-plus contractor of the United States is involved in litigation based on a claim arising out of the same incident or transaction.

§ 10.11 Relationship to other agency regulations.

The regulations in this part supplement the Attorney General's regulations in part 14 of Chapter 1 of title 28, CFR, as amended. Those regulations, including subsequent amendments thereto, and the regulations in this part apply to the consideration by the Environmental Protection Agency of administrative claims under the Federal Tort Claims Act.

[38 FR 16868, June 27, 1973, as amended at 51 FR 25832, July 16, 1986]

PART 11—SECURITY CLASSIFICATION REGULATIONS PURSUANT TO EXECUTIVE ORDER 11652

Sec.

11.1 Purpose.
11.2 Background.
11.3 Responsibilities.
11.4 Definitions.
11.5 Procedures.
11.6 Access by historical researchers and former Government officials.

AUTHORITY: Executive Order 11652 (37 FR 5209, March 10, 1972) and the National Security Directive of May 17, 1972 (37 FR 10053, May 19, 1972).

SOURCE: 37 FR 23541, Nov. 4, 1972, unless otherwise noted.

§ 11.1 Purpose.

These regulations establish policy and procedures governing the classification and declassification of national security information. They apply also to information or material designated under the Atomic Energy Act of 1954, as amended, as ''Restricted Data,'' or ''Formerly Restricted Data'' which, additionally, is subject to the provisions of the Act and regulations of the Atomic Energy Commission.

§ 11.2 Background.

While the Environmental Protection Agency does not have the authority to

originally classify information or material in the interest of the national security, it may under certain circumstances downgrade or declassify previously classified material or generate documents incorporating classified information properly originated by other agencies of the Federal Government which must be safeguarded. Agency policy and procedures must conform to applicable provisions of Executive Order 11652, and the National Security Council Directive of May 17, 1972, governing the safeguarding of national security information.

§ 11.3 Responsibilities.

(a) Classification and Declassification Committee: This committee, appointed by the Administrator, has the authority to act on all suggestions and complaints with respect to EPA's administration of this order. It shall establish procedures to review and act within 30 days upon all applications and appeals regarding requests for declassification. The Administrator, acting through the committee, shall be authorized to overrule previous determinations in whole or in part when, in its judgment, continued protection is no longer required. If the committee determines that continued classification is required under section 5(B) of Executive Order 11652, it shall promptly so notify the requester and advise him that he may appeal the denial to the Interagency Classification Review Committee.

(b) Director, Security and Inspection Division, Office of Administration: The Director, Security and Inspection Division, is responsible for the overall management and direction of a program designed to assure the proper handling and protection of classified information, and that classified information in the Agency's possession bears the appropriate classification markings. He also will assure that the program operates in accordance with the policy established herein, and will serve as Secretary of the Classification and Declassification Committee.

(c) Assistant Administrators, Regional Administrators, Heads of Staff Offices, Directors of National Environmental Research Centers are responsible for designating an official within their respective areas who shall be responsible for:

(1) Serving as that area's liaison with the Director, Security and Inspection Division, for questions or suggestions concerning security classification matters.

(2) Reviewing and approving, as the representative of the contracting offices, the DD Form 254, Contract Security Classification Specification, issued to contractors.

(d) Employees; (1) Those employees generating documents incorporating classified information properly originated by other agencies of the Federal Government are responsible for assuring that the documents are marked in a manner consistent with security classification assignments.

(2) Those employees preparing information for public release are responsible for assuring that such information is reviewed to eliminate classified information.

(3) All employees are responsible for bringing to the attention of the Director, Security and Inspection Division, any security classification problems needing resolution.

§ 11.4 Definitions.

(a) *Classified information.* Official information which has been assigned a security classification category in the interest of the national defense or foreign relations of the United States.

(b) *Classified material.* Any document, apparatus, model, film, recording, or any other physical object from which classified information can be derived by study, analysis, observation, or use of the material involved.

(c) *Marking.* The act of physically indicating the classification assignment on classified material.

(d) *National security information.* As used in this order this term is synonymous with ''classified information.'' It is any information which must be protected against unauthorized disclosure in the interest of the national defense or foreign relations of the United States.

(e) *Security classification assignment.* The prescription of a specific security classification for a particular area or item of information. The information involved constitutes the sole basis for

determining the degree of classification assigned.

(f) *Security classification category*. The specific degree of classification (Top Secret, Secret or Confidential) assigned to classified information to indicate the degree of protection required.

(1) *Top Secret*. Top Secret refers to national security information or material which requires the highest degree of protection. The test for assigning Top Secret classification shall be whether its unauthorized disclosure could reasonably be expected to cause exceptionally grave damage to the national security. Examples of ''exceptionally grave damage'' include armed hostilities against the United States or its allies; disruption of foreign relations vitally affecting the national security; the compromise of vital national defense plans or complex cryptologic and communications intelligence systems; the revelation of sensitive intelligence operations; and the disclosure of scientific or technological developments vital to national security. This classification shall be used with the utmost restraint.

(2) *Secret*. Secret refers to that national security information or material which requires a substantial degree of protection. The test for assigning Secret classification shall be whether its unauthorized disclosure could reasonably be expected to cause serious damage to the national security. Examples of ''serious damage'' include disruption of foreign relations significantly affecting the national security; significant impairment of a program or policy directly related to the national security; revelation of significant military plans or intelligence operations; and compromise of scientific or technological developments relating to national security. The classification Secret shall be sparingly used.

(3) *Confidential*. Confidential refers to that national security information or material which requires protection. The test for assigning Confidential classification shall be whether its unauthorized disclosure could reasonably be expected to cause damage to the national security.

§ 11.5 Procedures.

(a) *General*. Agency instructions on access, marking, safekeeping, accountability, transmission, disposition, and destruction of classification information and material will be found in the EPA Security Manual for Safeguarding Classified Material. These instructions shall conform with the National Security Council Directive of May 17, 1972, governing the classification, downgrading, declassification, and safeguarding of National Security Information.

(b) *Classification*. (1) When information or material is originated within EPA and it is believed to require classification, the person or persons responsible for its origination shall protect it in the manner prescribed for protection of classified information. The information will then be transmitted under appropriate safeguards to the Director, Security and Inspection Division, who will forward it to the department having primary interest in it with a request that a classification determination be made.

(2) A holder of information or material which incorporates classified information properly originated by other agencies of the Federal Government shall observe and respect the classification assigned by the originator.

(3) If a holder believes there is unnecessary classification, that the assigned classification is improper, or that the document is subject to declassification, he shall so advise the Director, Security and Inspection Division, who will be responsible for obtaining a resolution.

(c) *Downgrading and declassification*. Classified information and material officially transferred to the Agency during its establishment, pursuant to Reorganization Plan No. 3 of 1970, shall be declassified in accordance with procedures set forth below. Also, the same procedures will apply to the declassification of any information in the Agency's possession which originated in departments or agencies which no longer exist, except that no declassification will occur in such cases until other departments having an interest in the subject matter have been consulted. Other classified information in the Agency's possession may be downgraded or declassified by the official

authorizing its classification, by a successor in capacity, or by a supervisory official of either.

(1) *General Declassification Schedule*—(i) *Top Secret.* Information or material originally classified Top Secret shall become automatically downgraded to Secret at the end of the second full calendar year following the year in which it was originated, downgraded to Confidential at the end of the fourth full calendar year following the year in which it was originated, and declassified at the end of the 10th full calendar year following the year in which it was originated.

(ii) *Secret.* Information and material originally classified Secret shall become automatically downgraded to Confidential at the end of the second full calendar year following the year in which it was originated, and declassified at the end of the eighth full calendar year following the year in which it was originated.

(iii) *Confidential.* Information and material originally classified Confidential shall become automatically declassified at the end of the sixth full calendar year following the year in which it was originated.

(2) *Exemption from the General Declassification Schedule.* Information or material classified before June 1, 1972, assigned to Group 4 under Executive Order No. 10501, as amended, shall be subject to the General Declassification Schedule. All other information or material classified before June 1, 1972, whether or not assigned to Groups 1, 2, or 3, of Executive Order No. 10501, as amended, shall be excluded from the General Declassification Schedule. However, at any time after the expiration of 10 years after the date of origin it shall be subject to a mandatory classification review and disposition in accordance with the following criteria and conditions:

(i) It shall be declassified unless it falls within one of the following criteria:

(*a*) Classified information or material furnished by foreign governments or international organizations and held by the United States on the understanding that it be kept in confidence.

(*b*) Classified information or material specifically covered by statute, or pertaining to cryptography, or disclosing intelligence sources or methods.

(*c*) Classified information or material disclosing a system, plan, installation, project, or specific foreign relations matter, the continuing protection of which is essential to the national security.

(*d*) Classified information or material the disclosure of which would place a person in immediate jeopardy.

(ii) *Mandatory review of exempted material.* All classified information and material originated after June 1, 1972, which is exempted under any of the above criteria shall be subject to a classification review by the originating department at any time after the expiration of 10 years from the date of origin provided:

(*a*) A department or member of the public requests a review;

(*b*) The request describes the document or record with sufficient particularity to enable the department to identify it; and

(*c*) The record can be obtained with a reasonable amount of effort.

(*d*) Information or material which no longer qualifies for exemption under any of the above criteria shall be declassified. Information or material which continues to qualify under any of the above criteria shall be so marked, and, unless impossible, a date for automatic declassification shall be set.

(iii) All requests for ''mandatory review'' shall be directed to:

Director, Security and Inspection Division, Environmental Protection Agency, Washington, DC 20460.

The Director, Security and Inspection Division shall promptly notify the action office of the request, and the action office shall immediately acknowledge receipt of the request in writing.

(iv) *Burden of proof for administrative determinations.* The burden of proof is on the originating Agency to show that continued classification is warranted within the terms of this paragraph (c)(2).

(v) *Availability of declassified material.* Upon a determination under paragraph (ii) of this paragraph (c)(2), that the requested material no longer warrants classification, it shall be declassified

and made promptly available to the requester, if not otherwise exempt from disclosure under section 552(b) of Title 5 U.S.C. (Freedom of Information Act) or other provision of law.

(vi) *Classification review requests.* As required by paragraph (ii) of this paragraph (c)(2) of this order, a request for classification review must describe the document with sufficient particularity to enable the Department or Agency to identify it and obtain it with a reasonable amount of effort. Whenever a request is deficient in its description of the record sought, the requester should be asked to provide additional identifying information whenever possible. Before denying a request on the ground that it is unduly burdensome, the requester should be asked to limit his request to records that are reasonably obtainable. If nonetheless the requester does not describe the records sought with sufficient particularity, or the record requested cannot be obtained with a reasonable amount of effort, the requester shall be notified of the reasons why no action will be taken and of his right to appeal such decision.

§11.6 Access by historical researchers and former Government officials.

(a) Access to classified information or material may be granted to historical researchers or to persons who formerly occupied policymaking positions to which they were appointed by the President: *Provided, however,* That in each case the head of the originating Department shall:

(1) Determine that access is clearly consistent with the interests of the national security; and

(2) Take appropriate steps to assure that classified information or material is not published or otherwise compromised.

(b) Access granted a person by reason of his having previously occupied a policymaking position shall be limited to those papers which the former official originated, reviewed, signed, or received while in public office, except as related to the ''Declassification of Presidential Papers,'' which shall be treated as follows:

(1) *Declassification of Presidential Papers.* The Archivist of the United States shall have authority to review and declassify information and material which has been classified by a President, his White House Staff or special committee or commission appointed by him and which the Archivist has in his custody at any archival depository, including a Presidential library. Such declassification shall only be undertaken in accord with:

(i) The terms of the donor's deed of gift;

(ii) Consultations with the Departments having a primary subject-matter interest; and

(iii) The provisions of §11.5(c).

PART 12—NONDISCRIMINATION ON THE BASIS OF HANDICAP IN PROGRAMS OR ACTIVITIES CONDUCTED BY THE ENVIRONMENTAL PROTECTION AGENCY

Sec.

12.101 Purpose.
12.102 Application.
12.103 Definitions.
12.104—12.109 [Reserved]
12.110 Self-evaluation.
12.111 Notice.
12.112—12.129 [Reserved]
12.130 General prohibitions against discrimination.
12.131—12.139 [Reserved]
12.140 Employment.
12.141—12.148 [Reserved]
12.149 Program accessibility: Discrimination prohibited.
12.150 Program accessibility: Existing facilities.
12.151 Program accessibility: New construction and alterations.
12.152—12.159 [Reserved]
12.160 Communications.
12.161—12.169 [Reserved]
12.170 Compliance procedures.
12.171—12.999 [Reserved]

AUTHORITY: 29 U.S.C. 794.

SOURCE: 52 FR 30606, Aug. 14, 1987, unless otherwise noted.

§12.101 Purpose.

The purpose of this part is to effectuate section 119 of the Rehabilitation, Comprehensive Services, and Developmental Disabilities Amendments of 1978, which amended section 504 of the Rehabilitation Act of 1973 to prohibit discrimination on the basis of handicap in programs or activities conducted by Executive agencies or the U.S. Postal

Service. Section 504 regulations applicable to recipients of financial assistance from the Environmental Protection Agency (EPA) may be found at 40 CFR part 7 (1986).

§ 12.102 Application.

This part applies to all programs or activities conducted by the agency, except for programs or activities conducted outside the United States that do not involve individuals with handicaps in the United States.

§ 12.103 Definitions.

For purposes of this part, the term—

Agency means Environmental Protection Agency.

Assistant Attorney General means the Assistant Attorney General, Civil Rights Division, U.S. Department of Justice.

Auxiliary aids means services or devices that enable persons with impaired sensory, manual, or speaking skills to have an equal opportunity to participate in, and enjoy the benefits of, programs or activities conducted by the agency. For example, auxiliary aids useful for persons with impaired vision include readers, Brailled materials, audio recordings, and other similar services and devices. Auxiliary aids useful for persons with impaired hearing include telephone handset amplifiers, telephones compatible with hearing aids, telecommunication devices for deaf persons (TDD's), interpreters, notetakers, written materials, and other similar services and devices.

Complete complaint means a written statement that contains the complainant's name and address and describes the agency's alleged discriminatory action in sufficient detail to inform the agency of the nature and date of the alleged violation of section 504. It shall be signed by the complainant or by someone authorized to do so on his or her behalf. Complaints filed on behalf of classes or third parties shall describe or identify (by name, if possible) the alleged victims of discrimination.

Facility means all or any portion of buildings, structures, equipment, roads, walks, parking lots, rolling stock or other conveyances, or other real or personal property.

Individual with handicaps means any person who has a physical or mental impairment that substantially limits one or more major life activities, has a record of such an impairment, or is regarded as having such an impairment. As used in this definition, the phrase:

(1) *Physical or mental impairment* includes—

(i) Any physiological disorder or condition, cosmetic disfigurement, or anatomical loss affecting one or more of the following body systems: Neurological; musculoskeletal; special sense organs; respiratory, including speech organs; cardiovascular; reproductive, digestive, genitourinary; hemic and lymphatic; skin, and endocrine; or

(ii) Any mental or psychological disorder, such as mental retardation, organic brain syndrome, emotional or mental illness, and specific learning disabilities. The term *physical or mental impairment* includes, but is not limited to, such diseases and conditions as orthopedic, visual, speech, and hearing impairments, cerebral palsy, epilepsy, muscular dystrophy, multiple sclerosis, cancer, heart disease, diabetes, mental retardation, emotional illness, and drug addiction and alcoholism.

(2) *Major life activities* includes functions such as caring for one's self, performing manual tasks, walking, seeing, hearing, speaking, breathing, learning, and working.

(3) *Has a record of such an impairment* means has a history of, or has been misclassified as having, a mental or physical impairment that substantially limits one or more major life activities.

(4) *Is regarded as having an impairment* means—

(i) Has a physical or mental impairment that does not substantially limit major life activities but is treated by the agency as constituting such a limitation;

(ii) Has a physical or mental impairment that substantially limits major life activities only as a result of the attitudes of others toward such impairment; or

(iii) Has none of the impairments defined in subparagraph (1) of this definition but is treated by the agency as having such an impairment.

Qualified individual with handicaps means—

(1) With respect to any agency program or activity under which a person is required to perform services or to achieve a level of accomplishment, an individual with handicaps who meets the essential eligibility requirements and who can achieve the purpose of the program or activity, without modifications in the program or activity that the agency can demonstrate would result in a fundamental alteration in its nature; or

(2) With respect to any other program or activity an individual with handicaps who meets the essential eligibility requirements for participation in, or receipt of benefits from, that program or activity.

(3) *Qualified handicapped person* as that term is defined for purposes of employment in 29 CFR 1613.702(f), which is made applicable to this part by § 12.140.

Section 504 means section 504 of the Rehabilitation Act of 1973 (Pub. L. 93–112, 87 Stat. 394 (29 U.S.C. 794)), as amended by the Rehabilitation Act Amendments of 1974 (Pub. L. 93–516, 88 Stat. 1617); and the Rehabilitation, Comprehensive Services, and Developmental Disabilities Amendments of 1978 (Pub. L. 95–602, 92 Stat. 2955); and the Rehabilitation Act Amendments of 1986 (Pub. L. 99–506, 100 Stat. 1810). As used in this part, section 504 applies only to programs or activities conducted by Executive agencies and not to federally assisted programs.

§§ 12.104—12.109 [Reserved]

§ 12.110 Self-evaluation.

(a) The agency shall, by November 13, 1987, begin a nationwide evaluation, of its current policies and practices, and the effects thereof, that do not or may not meet the requirements of this part. The agency shall provide an opportunity to interested persons, including individuals with handicaps or organizations representing individuals with handicaps to, participate in the self-evaluation process by submitting comments (both oral and written).

(b) The evaluation shall be concluded by September 14, 1988, with a written report submitted to the Administrator that states the findings of the self-evaluation, any remedial action taken, and recommendations, if any, for further remedial action.

(c) The Administrator shall, within 60 days of the receipt of the report of the evaluation and recommendations, direct that certain remedial actions be taken as he/she deems appropriate.

(d) The agency shall, for at least three years following completion of the evaluation required under paragraph (b) of this section, maintain on file and make available for public inspection:

(1) A list of the interested persons consulted;

(2) A description of the areas examined and any problems identified; and

(3) A description of any modifications made.

§ 12.111 Notice.

The agency shall make available to employees, unions representing employees, applicants, participants, beneficiaries, and other interested persons such information regarding the provisions of this part and its applicability to the programs or activities conducted by the agency, and make such information available to them in such manner as the agency head finds necessary to apprise such persons of the protections against discrimination assured them by section 504 and this regulation.

§§ 12.112—12.129 [Reserved]

§ 12.130 General prohibitions against discrimination.

(a) No qualified individual with handicaps shall, on the basis of handicap, be excluded from participation in, be denied the benefits of, or otherwise be subjected to discrimination under any program or activity conducted by the agency.

(b) (1) The agency, in providing any aid, benefit, or service, may not, directly or through contractual, licensing, or other arrangements, on the basis of handicap—

(i) Deny a qualified individual with handicaps the opportunity to participate in or benefit from the aid, benefit, or service;

(ii) Afford a qualified individual with handicaps an opportunity to participate in or benefit from the aid, benefit,

or service that is not equal to that afforded others;

(iii) Provide a qualified individual with handicaps with an aid, benefit, or service that is not as effective in affording equal opportunity to obtain the same result, to gain the same benefit, or to reach the same level of achievement as that provided to others;

(iv) Provide different or separate aid, benefits, or services to individuals with handicaps or to any class of individuals with handicaps than is provided to others unless such action is necessary to provide qualified individuals with handicaps with aid, benefits, or services that are as effective as those provided to others;

(v) Deny a qualified individual with handicaps the opportunity to participate as a member of planning or advisory boards; or

(vi) Otherwise limit a qualified individual with handicaps in the enjoyment of any right, privilege, advantage, or opportunity enjoyed by others receiving the aid, benefit, or service.

(2) The agency may not deny a qualified individual with handicaps the opportunity to participate in programs or activities that are not separate or different, despite the existence of permissibly separate or different programs or activities.

(3) The agency may not, directly or through contractual or other arrangements, utilize criteria or methods of administration the purpose or effect of which would—

(i) Subject qualified individuals with handicaps to discrimination on the basis of handicap; or

(ii) Defeat or substantially impair accomplishment of individuals with handicaps.

(4) The agency may not, in determining the site or location of a facility, make selections the purpose or effect of which would—

(i) Exclude individuals with handicaps from, deny them the benefits of, or otherwise subject them to discrimination under any program or activity conducted by the agency; or

(ii) Defeat or substantially impair the accomplishment of the objectives of a program or activity with respect to individuals with handicaps.

(5) The agency, in the selection of procurement contractors, may not use criteria that subject qualified individuals with handicaps to discrimination on the basis of handicap.

(6) The agency may not administer a licensing or certification program in a manner that subjects qualified individuals with handicaps to discrimination on the basis of handicap, nor may the agency establish requirements for the programs or activities of licensees or certified entities that subject qualified individuals with handicaps to discrimination on the basis of handicap. However, the program or activities of entities that are licensed or certified by the agency are not, themselves, covered by this part.

(c) The exclusion of nonhandicapped persons from the benefits of a program limited by Federal statute or Executive order to individuals with handicaps or the exclusion of a specific class of individuals with handicaps from a program limited by Federal statute or Executive order to a different class of individuals with handicaps is not prohibited by this part.

(d) The agency shall administer programs and activities in the most integrated setting appropriate to the needs of qualified individuals with handicaps.

§§ 12.131—12.139 [Reserved]

§ 12.140 Employment.

No qualified individual with handicaps shall, on the basis of handicap, be subjected to discrimination in employment under any program or activity conducted by the agency. The definitions, requirements, and procedures of section 501 of the Rehabilitation Act of 1973 (29 U.S.C. 791), as established by the Equal Employment Opportunity Commission in 29 CFR part 1613, shall apply to employment in federally conducted programs or activities.

§§ 12.141—12.148 [Reserved]

§ 12.149 Program accessibility: Discrimination prohibited.

Except as otherwise provided in § 12.150, no qualified individual with handicaps shall, because the agency's facilities are inaccessible to or unusable by individuals with handicaps, be denied the benefits of, be excluded from

participation in, or otherwise be subjected to discrimination under any program or activity conducted by the agency.

§12.150 Program accessibility: Existing facilities.

(a) *General.* The agency shall operate each program or activity so that the program or activity, when viewed in its entirety, is readily accessible to and usable by individuals with handicaps. This paragraph does not—

(1) Necessarily require the agency to make each of its existing facilities accessible to and usable by individuals with handicaps; or

(2) Require the agency to take any action that it can demonstrate would result in a fundamental alteration in the nature of a program or activity or in undue financial and administrative burdens. In those circumstances where agency personnel believe that the proposed action would fundamentally alter the program or activity or would result in undue financial and administrative burdens, the agency has the burden of proving that compliance with §12.150(a) would result in such alteration or burdens. The decision that compliance would result in such alteration or burdens must be made by the agency head or designee after considering all agency resources available for use in the funding and operation of the conducted program or activity, and must be accompanied by a written statement of the reasons for reaching that conclusion. If an action would result in such an alteration or such burdens, the agency shall take any other action that would not result in such an alteration or such burdens but would nevertheless ensure that individuals with handicaps receive the benefits and services of the program or activity.

(b) *Methods.* The agency may comply with the requirements of this section through such means as redesign of equipment, reassignment of services to accessible buildings, assignment of aides to beneficiaries, home visits, delivery of services at alternate accessible sites, alteration of existing facilities and construction of new facilities, use of accessible rolling stock, or any other methods that result in making its programs or activities readily accessible to and usable by individuals with handicaps. The agency is not required to make structural changes in existing facilities where other methods are effective in achieving compliance with this section. The agency, in making alterations to existing buildings, shall meet accessibility requirements to the extent compelled by the Architectural Barriers Act of 1968, as amended (42 U.S.C. 4151–4157), and any regulations implementing it. In choosing among available methods for meeting the requirements of this section, the agency shall give priority to those methods that offer programs and activities to qualified individuals with handicaps in the most integrated setting appropriate.

(c) *Time period for compliance.* The agency shall comply with the obligations established under this section by November 13, 1987, except that where structural changes in facilities are undertaken, such changes shall be made by September 14, 1990, but in any event as expeditiously as possible.

(d) *Transition plan.* In the event that structural changes to facilities will be undertaken to achieve program accessibility, the agency shall develop, by March 14, 1988, a transition plan setting forth the steps necessary to complete such changes. The agency shall provide an opportunity to interested persons, including individuals with handicaps or organizations representing individuals with handicaps to participate in the development of the transition plan by submitting comments (both oral and written). A copy of the transition plan shall be made available for public inspection. The plan shall, at a minimum—

(1) Identify physical obstacles in the agency's facilities that limit the accessibility of its programs or activities to individuals with handicaps;

(2) Describe in detail the methods that will be used to make the facilities accessible;

(3) Specify the schedule for taking the steps necessary to achieve compliance with this section and, if the time period of the transition plan is longer than one year, identify steps that will be taken during each year of the transition period; and

(4) Indicate the official responsible for implementation of the plan.

§ 12.151 Program accessibility: New construction and alterations.

Each building or part of a building that is constructed or altered by, on behalf of, or for the use of the agency shall be designed, constructed, or altered so as to be readily accessible to and usable by individuals with handicaps. The definitions, requirements, and standards of the Architectural Barriers Act (42 U.S.C. 4151–4157), as established in 41 CFR 101–19.600 to 101–19.607, apply to buildings covered by this section.

§§ 12.152—12.159 [Reserved]

§ 12.160 Communications.

(a) The agency shall take appropriate steps to ensure effective communication with applicants, participants, personnel of other Federal entities, and members of the public.

(1) The agency shall furnish appropriate auxiliary aids where necessary to afford an individual with handicaps an equal opportunity to participate in, and enjoy the benefits of, a program or activity conducted by the agency.

(i) In determining what type of auxiliary aid is necessary, the agency shall give primary consideration to the requests of the individuals with handicaps.

(ii) The agency need not provide individually prescribed devices, readers for personal use or study, or other devices of a personal nature.

(2) Where the agency communicates with applicants and beneficiaries by telephone, telecommunication devices for deaf persons (TDD's) or equally effective telecommunication systems shall be used.

(b) The agency shall ensure that interested persons, including persons with impaired vision or hearing, can obtain information as to the existence and location of accessible services, activities, and facilities.

(c) The agency shall provide signage at a primary entrance to each of its inaccessible facilities, directing users to a location at which they can obtain information about accessible facilities. The international symbol for accessibility shall be used at each primary entrance of an accessible facility.

(d) This section does not require the agency to take any action that it can demonstrate would result in a fundamental alteration in the nature of a program or activity or in undue financial and administrative burdens. In those circumstances where agency personnel believe that the proposed action would fundamentally alter the program or activity or would result in undue financial and administrative burdens, the agency has the burden of proving that compliance with § 12.160 would result in such alteration or burdens. The decision that compliance would result in such alteration or burdens must be made by the agency head or designee after considering all agency resources available for use in the funding and operation of the conducted program or activity, and must be accompanied by a written statement of the reasons for reaching that conclusion. If an action required to comply with this section would result in such an alteration or such burdens, the agency shall take any other action that would not result in such an alteration or such burdens but would nevertheless ensure that, to the maximum extent possible, individuals with handicaps receive the benefits and services of the program or activity.

§§ 12.161—12.169 [Reserved]

§ 12.170 Compliance procedures.

(a) Except as provided in paragraph (b) of this section, this section applies to all allegations of discrimination on the basis of handicap in programs or activities conducted by the agency.

(b) The agency shall process complaints alleging violations of section 504 with respect to employment according to the procedures established by the Equal Employment Opportunity Commission in 29 CFR part 1613 pursuant to section 501 of the Rehabilitation Act of 1973 (29 U.S.C. 791).

(c) Responsibility for coordinating implementation of this section shall be vested in the Director of the Office of Civil Rights, EPA or his/her designate.

(d) The complainant may file a complete complaint at any EPA office. All complete complaints must be filed

within 180 days of the alleged act of discrimination. The agency may extend this time period for good cause. The agency shall accept and investigate all complete complaints for which it has jurisdiction.

(e) If the agency receives a complaint over which it does not have jurisdiction, it shall promptly notify the complainant and shall make reasonable efforts to refer the complaint to the appropriate Government entity.

(f) The agency shall notify the Architectural and Transportation Barriers Compliance Board upon receipt of any complaint alleging that a building of facility that is subject to the Architectural Barriers Act of 1968, as amended (42 U.S.C. 4151–4157), is not readily accessible to and usable by individuals with handicaps.

(g) Within 180 days of the receipt of a complete complaint for which it has jurisdiction, the agency shall notify the complainant of the results of the investigation in a letter containing—

(1) Findings of fact and conclusions of law;

(2) A description of a remedy for each violation found; and

(3) A notice of the right to appeal.

(h) Appeals of the findings of fact and conclusions of law or remedies must be filed by the complainant within 90 days of receipt from the agency of the letter required by paragraph (g) of this section. The agency may extend this time for good cause.

(i) Timely appeals shall be accepted and processed by the Administrator or a designee.

(j) The Administrator or a designee shall notify the complainant of the results of the appeal within 60 days of the receipt of the request. If the Administrator or designee determines that additional information is needed from the complainant, he or she shall have 60 days from the date of receipt of the additional information to make his or her determination on the appeal.

(k) The time limits cited in paragraphs (g) and (j) of this section above may be extended with the permission of the Assistant Attorney General.

(l) The agency may delegate its authority for conducting complaint investigations to other Federal agencies, except that the authority for making the final determination may not be delegated to another agency.

§§ 12.171—12.999 [Reserved]

PART 13—CLAIMS COLLECTION STANDARDS

Subpart A—General

Sec.
13.1 Purpose and scope.
13.2 Definitions.
13.3 Interagency claims.
13.4 Other remedies.
13.5 Claims involving criminal activities or misconduct.
13.6 Subdivision of claims not authorized.
13.7 Omission not a defense.

Subpart B—Collection

13.8 Collection rule.
13.9 Initial notice.
13.10 Aggressive collection actions; documentation.
13.11 Interest, penalty and administrative costs.
13.12 Interest and charges pending waiver or review.
13.13 Contracting for collection services.
13.14 Use of credit reporting agencies.
13.15 Taxpayer information.
13.16 Liquidation of collateral.
13.17 Suspension or revocation of license or eligibility.
13.18 Installment payments.
13.19 Analysis of costs; automation; prevention of overpayments, delinquencies or defaults.

Subpart C—Administrative Offset

13.20 Administrative offset of general debts.
13.21 Employee salary offset—general.
13.22 Salary offset when EPA is the creditor agency.
13.23 Salary offset when EPA is not the creditor agency.

Subpart D—Compromise of Debts

13.24 General.
13.25 Standards for compromise.
13.26 Payment of compromised claims.
13.27 Joint and several liability.
13.28 Execution of releases.

Subpart E—Suspension of Collection Action

13.29 Suspension—general.
13.30 Standards for suspension.

Subpart F—Termination of Debts

13.31 Termination—general.
13.32 Standards for termination.

Subpart G—Referrals

13.33 Referrals to the Department of Justice.

Subpart H—Referral of Debts to IRS for Tax Refund Offset

13.34 Purpose.
13.35 Applicability and scope.
13.36 Administrative charges.
13.37 Notice requirement before offset.
13.38 Review within the Agency.
13.39 Agency determination.
13.40 Stay of offset.

AUTHORITY:5 U.S.C. 552a, 5512, and 5514; 31 U.S.C. 3711 *et seq.* and 3720A; 4 CFR parts 101–10.

SOURCE: 53 FR 37270, Sept. 23, 1988, unless otherwise noted.

Subpart A—General

§ 13.1 Purpose and scope.

This regulation prescribes standards and procedures for the Environmental Protection Agency's (EPA's) collection and disposal of debts. These standards and procedures are applicable to all debts for which a statute, regulation or contract does not prescribe different standards or procedures. This regulation covers EPA's collection, compromise, suspension, termination, and referral of debts.

§ 13.2 Definitions.

(a) *Debt* means an amount owed to the United States from sources which include loans insured or guaranteed by the United States and all other amounts due the United States from fees, grants, contracts, leases, rents, royalties, services, sales of real or personal property, overpayments, fines, penalties, damages, interest, forfeitures (except those arising under the Uniform Code of Military Justice), and all other similar sources. As used in this regulation, the terms *debt* and *claim* are synonymous.

(b) *Delinquent debt* means any debt which has not been paid by the date specified by the Government for payment or which has not been satisfied in accordance with a repayment agreement.

(c) *Debtor* means an individual, organization, association, corporation, or a State or local government indebted to the United States or a person or entity with legal responsibility for assuming the debtor's obligation.

(d) *Agency* means the United States Environmental Protection Agency.

(e) *Administrator* means the Administrator of EPA or an EPA employee or official designated to act on the Administrator's behalf.

(f) *Administrative offset* means the withholding of money payable by the United States to, or held by the United States for, a person to satisfy a debt the person owes the Government.

(g) *Creditor agency* means the Federal agency to which the debt is —wed.

(h) *Disposable pay* means that part of current basic pay, special pay, incentive pay, retired pay, retainer pay, or in the case of an employee not entitled to basic pay, other authorized pay remaining after the deduction of any amount described in 5 CFR 581.105 (b) through (f). These deductions include, but are not limited to: Social security withholdings; Federal, State and local tax withholdings; health insurance premiums; retirement contributions; and life insurance premiums.

(i) *Employee* means a current employee of the Federal Government including a current member of the Armed Forces.

(j) *Person* means an individual, firm, partnership, corporation, association and, except for purposes of administrative offsets under subpart C and interest, penalty and administrative costs under subpart B of this regulation, includes State and local governments and Indian tribes and components of tribal governments.

(k) *Employee salary offset* means the administrative collection of a debt by deductions at one or more officially established pay intervals from the current pay account of an employee without the employee's consent.

(l) *Waiver* means the cancellation, remission, forgiveness or non-recovery of a debt or debt-related charge as permitted or required by law.

§ 13.3 Interagency claims.

This regulation does not apply to debts owed EPA by other Federal agencies. Such debts will be resolved by negotiation between the agencies or by referral to the General Accounting Office (GAO).

§ 13.4 Other remedies.

(a) This regulation does not supersede or require omission or duplication of administrative proceedings required by contract, statute, regulation or other Agency procedures, *e.g.*, resolution of audit findings under grants or contracts, informal grant appeals, formal appeals, or review under a procurement contract.

(b) The remedies and sanctions available to the Agency under this regulation for collecting debts are not intended to be exclusive. The Agency may impose, where authorized, other appropriate sanctions upon a debtor for inexcusable, prolonged or repeated failure to pay a debt. For example, the Agency may stop doing business with a grantee, contractor, borrower or lender; convert the method of payment under a grant or contract from an advance payment to a reimbursement method; or revoke a grantee's or contractor's letter-of-credit.

§ 13.5 Claims involving criminal activities or misconduct.

(a) The Administrator will refer cases of suspected criminal activity or misconduct to the EPA Office of Inspector General. That office has the responsibility for investigating or referring the matter, where appropriate, to the Department of Justice (DOJ), and/or returning it to the Administrator for further actions. Examples of activities which should be referred are matters involving fraud, anti-trust violations, embezzlement, theft, false claims or misuse of Government money or property.

(b) The Administrator will not administratively compromise, terminate, suspend or otherwise dispose of debts involving criminal activity or misconduct without the approval of DOJ.

§ 13.6 Subdivision of claims not authorized.

A claim will not be subdivided to avoid the $20,000 limit on the Agency's authority to compromise, suspend, or terminate a debt. A debtor's liability arising from a particular transaction or contract is a single claim.

§ 13.7 Omission not a defense.

Failure by the Administrator to comply with any provision of this regulation is not available to a debtor as a defense against payment of a debt.

Subpart B—Collection

§ 13.8 Collection rule.

(a) The Administrator takes action to collect all debts owed the United States arising out of EPA activities and to reduce debt delinquencies. Collection actions may include sending written demands to the debtor's last known address. Written demand may be preceded by other appropriate action, including immediate referral to DOJ for litigation, when such action is necessary to protect the Government's interest. The Administrator may contact the debtor by telephone, in person and/or in writing to demand prompt payment, to discuss the debtor's position regarding the existence, amount or repayment of the debt, to inform the debtor of its rights (*e.g.*, to apply for waiver of the indebtedness or to have an administrative review) and of the basis for the debt and the consequences of nonpayment or delay in payment.

(b) The Administrator maintains an administrative file for each debt and/or debtor which documents the basis for the debt, all administrative collection actions regarding the debt (including communications to and from the debtor) and its final disposition. Information from a debt file relating to an individual may be disclosed only for purposes which are consistent with this regulation, the Privacy Act of 1974 and other applicable law.

§ 13.9 Initial notice.

(a) When the Administrator determines that a debt is owed EPA, he provides a written initial notice to the debtor. Unless otherwise provided by agreement, contract or order, the initial notice informs the debtor:

(1) Of the amount, nature and basis of the debt;

(2) That payment is due immediately upon receipt of the notice;

(3) That the debt is considered delinquent if it is not paid within 30 days of the date mailed or hand-delivered;

(4) That interest charges and, except for State and local governments and Indian tribes, penalty charges and administrative costs may be assessed against a delinquent debt;

(5) Of any rights available to the debtor to dispute the validity of the debt or to have recovery of the debt waived (citing the available review or waiver authority, the conditions for review or waiver, and the effects of the review or waiver request on the collection of the debt), and of the possibility of assessment of interest, penalty and administrative costs; and

(6) The address, telephone number and name of the person available to discuss the debt.

(b) EPA will respond promptly to communications from the debtor. Response generally will be within 20 days of receipt of communication from the debtor.

(c) Subsequent demand letters also will advise the debtor of any interest, penalty or administrative costs which have been assessed and will advise the debtor that the debt may be referred to a credit reporting agency (see § 13.14), a collection agency (see § 13.13) or to DOJ (see § 13.33) if it is not paid.

§ 13.10 Aggressive collection actions; documentation.

(a) EPA takes actions and effective follow-up on a timely basis to collect all claims of the United States for money and property arising out of EPA's activities. EPA cooperates with other Federal agencies in their debt collection activities.

(b) All administrative collection actions are documented in the claim file, and the bases for any compromise, termination or suspension of collection actions is set out in detail. This documentation, including the Claims Collection Litigation Report required § 13.33, is retained in the appropriate debt file.

§ 13.11 Interest, penalty and administrative costs.

(a) *Interest.* EPA will assess interest on all delinquent debts unless prohibited by statute, regulation or contract.

(1) Interest begins to accrue on all debts from the date of the initial notice to the debtor. EPA will not recover interest where the debt is paid within 30 days of the date of the notice. EPA will assess an annual rate of interest that is equal to the rate of the current value of funds to the United States Treasury (*i.e.*, the Treasury tax and loan account rate) as prescribed and published by the Secretary of the Treasury in the FEDERAL REGISTER and the Treasury Fiscal Requirements Manual Bulletins, unless a different rate is necessary to protect the interest of the Government. EPA will notify the debtor of the basis for its finding that a different rate is necessary to protect the interest of the Government.

(2) The Administrator may extend the 30-day period for payment where he determines that such action is in the best interest of the Government. A decision to extend or not to extend the payment period is final and is not subject to further review.

(3) The rate of interest, as initially assessed, remains fixed for the duration of the indebtedness. If a debtor defaults on a repayment agreement, interest may be set at the Treasury rate in effect on the date a new agreement is executed.

(4) Interest will not be assessed on interest charges, administrative costs or later payment penalties. However, where a debtor defaults on a previous repayment agreement and interest, administrative costs and penalties charges have been waived under the defaulted agreement, these charges can be reinstated and added to the debt principal under any new agreement and interest charged on the entire amount of the debt.

(b) *Administrative costs of collecting overdue debts.* The costs of the Agency's administrative handling of overdue debts, based on either actual or average cost incurred, will be charged on all debts except those owed by State and local governments and Indian tribes. These costs include both direct and indirect costs. Administrative costs will be assessed monthly throughout the period the debt is overdue except as provided by § 13.12.

(c) *Penalties.* As provided by 31 U.S.C. 3717(e)(2), a penalty charge will be assessed on all debts, except those owned

by State and local governments and Indian tribes, more than 90 days delinquent. The penalty charge will be at a rate not to exceed 6% per annum and will be assessed monthly.

(d) *Allocation of payments.* A partial payment by a debtor will be applied first to outstanding administrative costs, second to penalty assessments, third to accrued interest and then to the outstanding debt principal.

(e) *Waiver.* (1) The Administrator may (without regard to the amount of the debt) waive collection of all or part of accrued interest, penalty or administrative costs, where he determines that—

(i) Waiver is justified under the criteria of §13.25;

(ii) The debt or the charges resulted from the Agency's error, action or inaction, and without fault by the debtor; or

(iii) Collection of these charges would be against equity and good conscience or not in the best interest of the United States.

(2) A decision to waive interest, penalty charges or administrative costs may be made at any time prior to payment of a debt. However, where these charges have been collected prior to the waiver decision, they will not be refunded. The Administrator's decision to waive or not waive collection of these charges is a final agency action.

§13.12 Interest and charges pending waiver or review.

Interest, penalty charges and administrative costs will continue to accrue on a debt during administrative appeal, either formal or informal, and during waiver consideration by the Agency; *except,* that interest, penalty charges and administrative costs will not be assessed where a statute or a regulation specifically prohibits collection of the debt during the period of the administrative appeal or the Agency review.

§13.13 Contracting for collection services.

EPA will use private collection services where it determines that their use is in the best interest of the Government. Where EPA determines that there is a need to contract for collection services it will—

(a) Retain sole authority to resolve any dispute by the debtor of the validity of the debt, to compromise the debt, to suspend or terminate collection action, to refer the debt to DOJ for litigation, and to take any other action under this part which does not result in full collection of the debt;

(b) Require the contractor to comply with the Privacy Act of 1974, as amended, to the extent specified in 5 U.S.C. 552a(m), with applicable Federal and State laws pertaining to debt collection practices (*e.g.,* the Fair Debt Collection Practices Act (15 U.S.C. 1692 *et seq.*)), and with applicable regulations of the Internal Revenue Service;

(c) Require the contractor to account accurately and fully for all amounts collected; and

(d) Require the contractor to provide to EPA, upon request, all data and reports contained in its files relating to its collection actions on a debt.

§13.14 Use of credit reporting agencies.

EPA reports delinquent debts to appropriate credit reporting agencies.

(a) EPA provides the following information to the reporting agencies:

(1) A statement that the claim is valid and is overdue;

(2) The name, address, taxpayer identification number and any other information necessary to establish the identity of the debtor;

(3) The amount, status and history of the debt; and

(4) The program or pertinent activity under which the debt arose.

(b) Before disclosing debt information, EPA will:

(1) Take reasonable action to locate the debtor if a current address is not available; and

(2) If a current address is available, notify the debtor by certified mail, return receipt requested, that:

(i) The designated EPA official has reviewed the claim and has determined that it is valid and overdue;

(ii) That within 60 days EPA intends to disclose to a credit reporting agency the information authorized for disclosure by this subsection; and

(iii) The debtor can request a complete explanation of the claim, can dispute the information in EPA's records

concerning the claim, and can file for an administrative review, waiver or reconsideration of the claim, where applicable.

(c) Before information is submitted to a credit reporting agency, EPA will provide a written statement to the reporting agency that all required actions have been taken. Additionally, EPA will, thereafter, ensure that the credit reporting agency is promptly informed of any substantive change in the conditions or amounts of the debt, and promptly verify or correct information relevant to the claim.

(d) If a debtor disputes the validity of the debt, the credit reporting agency will refer the matter to the appropriate EPA official. The credit reporting agency will exclude the debt from its reports until EPA certifies in writing that the debt is valid.

§ 13.15 Taxpayer information.

(a) The Administrator may obtain a debtor's current mailing address from the Internal Revenue Service.

(b) Addresses obtained from the Internal Revenue Service will be used by the Agency, its officers, employees, agents or contractors and other Federal agencies only to collect or dispose of debts, and may be disclosed to credit reporting agencies only for the purpose of their use in preparing a commercial credit report on the taxpayer for use by EPA.

§ 13.16 Liquidation of collateral.

Where the Administrator holds a security instrument with a power of sale or has physical possession of collateral, he may liquidate the security or collateral and apply the proceeds to the overdue debt. EPA will exercise this right where the debtor fails to pay within a reasonable time after demand, unless the cost of disposing of the collateral is disproportionate to its value or special circumstances require judicial foreclosure. However, collection from other businesses, including liquidation of security or collateral, is not a prerequisite to requiring payment by a surety or insurance company unless expressly required by contract or statute. The Administrator will give the debtor reasonable notice of the sale and an accounting of any surplus proceeds and will comply with any other requirements of law or contract.

§ 13.17 Suspension or revocation of license or eligibility.

When collecting statutory penalties, forfeitures, or debts for purposes of enforcement or compelling compliance, the Administrator may suspend or revoke licenses or other privileges for any inexcusable, prolonged or repeated failure of a debtor to pay a claim. Additionally, the Administrator may suspend or disqualify any contractor, lender, broker, borrower, grantee or other debtor from doing business with EPA or engaging in programs EPA sponsors or funds if a debtor fails to pay its debts to the Government within a reasonable time. Debtors will be notified before such action is taken and applicable suspension or debarment procedures will be used. The Administrator will report the failure of any surety to honor its obligations to the Treasury Department for action under 6 U.S.C. 11.

§ 13.18 Installment payments.

(a) Whenever, feasible, and except as otherwise provided by law, debts owed to the United States, together with interest, penalty and administrative costs, as required by § 13.11, will be collected in a single payment. However, where the Administrator determines that a debtor is financially unable to pay the indebtedness in a single payment or that an alternative payment mechanism is in the best interest of the United States, the Administrator may approve repayment of the debt in installments. The debtor has the burden of establishing that it is financially unable to pay the debt in a single payment or that an alternative payment mechanism is warranted. If the Administrator agrees to accept payment by installments, the Administrator may require a debtor to execute a written agreement which specifies all the terms of the repayment arrangement and which contains a provision accelerating the debt in the event of default. The size and frequency of installment payments will bear a reasonable relation to the size of the debt and the debtor's ability to pay. The installment payments will be sufficient in

size and frequency to liquidate the debt in not more than 3 years, unless the Administrator determines that a longer period is required. Installment payments of less than $50 per month generally will not be accepted, but may be accepted where the debtor's financial or other circumstances justify. If the debt is unsecured, the Administrator may require the debtor to execute a confess-judgment note with a tax carry-forward and a tax carry-back provision. Where the Administrator secures a confess-judgment note, the Administrator will provide the debtor a written explanation of the consequences of the debtor's signing the note.

(b) If a debtor owes more than one debt and designates how a voluntary installment payment is to be applied among the debts, that designation will be approved if the Administrator determines that the designation is in the best interest of the United States. If the debtor does not designate how the payment is to be applied, the Administrator will apply the payment to the various debts in accordance with the best interest of the United States, paying special attention to applicable statutes of limitations.

§13.19 Analysis of costs; automation; prevention of overpayments, delinquencies or defaults.

(a) The Administrator may periodically compare EPA's costs in handling debts with the amounts it collects,

(b) The Administrator may periodically consider the need, feasibility, and cost effectiveness of automated debt collection operations.

(c) The Administrator may establish internal controls to identify the causes of overpayments and delinquencies and may issue procedures to prevent future occurrences of the identified problems.

Subpart C—Administrative Offset

§13.20 Administrative offset of general debts.

This subpart provides for EPA's collection of debts by administrative offset under section 5 of the Debt Collection Act of 1982 (31 U.S.C. 3716), other statutory authorities and the common law. It does not apply to offsets against employee salaries covered by §§13.21, 13.22 and 13.23 of this subpart. EPA will collect debts by administrative offsets where it determines that such collections are feasible and are not otherwise prohibited by statute or contract.

EPA will decide, on a case-by-case basis, whether collection by administrative offset is feasible and that its use furthers and protects the interest of the United States.

(a) *Standards.* (1) The Administrator collects debts by administrative offset if—

(i) The debt is certain in amount;

(ii) Efforts to obtain direct payment from the debtor have been, or would most likely be, unsuccessful or the Administrator and the debtor agree to the offset;

(iii) Offset is not expressly or implicitly prohibited by statute, regulation or contract;

(iv) Offset is cost-effective or has significant deterrent value;

(v) Offset does not substantially impair or defeat program objectives; and

(vi) Offset is best suited to further and protect the Government's interest.

(2) The Administrator may, in determining the method and amount of the offset, consider the financial impact on the debtor.

(b) *Interagency offset.* The Administrator may offset a debt owed to another Federal agency from amounts due or payable by EPA to the debtor, or may request another Federal agency to offset a debt owed to EPA. The Administrator may request the Internal Revenue Service to offset an overdue debt from a Federal income tax refund due a debtor where reasonable attempts to obtain payment have failed. Interagency offsets from employee salaries will be made in accordance with the procedures contained in §§13.22 and 13.23.

(c) *Multiple debts.* Where moneys are available for offset against multiple debts of a debtor, it will be applied in accordance with the best interest of the Government as determined by the Administrator on a case-by-case basis.

(d) *Statutory bar to offset.* Administrative offset will not be made more than 10 years after the Government's right to collect the debt first accrued, unless facts material to the Government's

right to collect the debt were not known and could not have been known through the exercise of reasonable care by the officer responsible for discovering or collecting the debt. For purposes of offset, the right to collect a debt accrues when the appropriate EPA official determines that a debt exists (e.g., contracting officer, grant award official, etc.), when it is affirmed by an administrative appeal or a court having jurisdiction, or when a debtor defaults on a payment agreement, whichever is latest. An offset occurs when money payable to the debtor is first withheld or when EPA requests offset from money held by another agency.

(e) *Pre-offset notice.* Before initiating offset, the Administrator sends the debtor written notice of:

(1) The basis for and the amount of the debt as well as the Agency's intention to collect the debt by offset if payment or satisfactory response has not been received within 30 days of the notice;

(2) The debtor's right to submit an alternative repayment schedule, to inspect and copy agency records pertaining to the debt, to request review of the determination of indebtedness or to apply for waiver under any available statute or regulation; and

(3) Applicable interest, penalty charges and administrative costs.

(f) *Alternative repayment.* The Administrator may, at the Administrator's discretion, enter into a repayment agreement with the debtor in lieu of offset. In deciding whether to accept payment of the debt by an alternative repayment agreement, the Administrator may consider such factors as the amount of the debt, the length of the proposed repayment period, whether the debtor is willing to sign a confess-judgment note, past Agency dealings with the debtor, documentation submitted by the debtor indicating that an offset will cause undue financial hardship, and the debtor's financial ability to adhere to the terms of a repayment agreement. The Administrator may require financial documentation from the debtor before considering the repayment arrangement.

(g) *Review of administrative determination.* (1) A debt will not be offset while a debtor is seeking either formal or informal review of the validity of the debt under this section or under another statute, regulation or contract. However, interest, penalty and administrative costs will continue to accrue during this period, unless otherwise waived by the Administrator. The Administrator may initiate offset as soon as practical after completion of review or after a debtor waives the opportunity to request review.

(2) The Administrator may administratively offset a debt prior to the completion of a formal or informal review where the determines that:

(i) Failure to take the offset would substantially prejudice EPA's ability to collect the debt; and

(ii) The time before the first offset is to be made does not reasonably permit the completion of the review procedures. (Offsets taken prior to completion of the review process will be followed promptly by the completion of the process. Amounts recovered by offset but later found not to be owed will be refunded promptly.)

(3) The debtor must provide a written request for review of the decision to offset the debt no later than 15 days after the date of the notice of the offset unless a different time is specifically prescribed. The debtor's request must state the basis for the request for review.

(4) The Administrator may grant an extension of time for filing a request for review if the debtor shows good cause for the late filing. A debtor who fails timely to file or to request an extension waives the right to review.

(5) The Administrator will issue, no later than 60 days after the filing of the request, a written final decision based on the evidence, record and applicable law.

§ 13.21 Employee salary offset—general.

(a) *Purpose.* This section establishes EPA's policies and procedures for recovery of debts owed to the United States by installment collection from the current pay account of an employee.

(b) *Scope.* The provisions of this section apply to collection by salary offset under 5 U.S.C. 5514 of debts owed EPA

and debts owed to other Federal agencies by EPA employees. This section does not apply to debts owed EPA arising from travel advances under 5 U.S.C. 5705, employee training expenses under 5 U.S.C. 4108 and to other debts where collection by salary offset is explicitly provided for or prohibited by another statute.

(c) *References.* The following statutes and regulations apply to EPA's recovery of debts due the United States by salary offset:

(1) 5 U.S.C. 5514, as amended, governing the installment collection of debts;

(2) 31 U.S.C. 3716, governing the liquidation of debts by administrative offset;

(3) 5 CFR part 550, subpart K, setting forth the minimum requirements for executive agency regulations on salary offset; and

(4) 4 CFR parts 101–105, the Federal Claims Collection Standards.

§13.22 Salary offset when EPA is the creditor agency.

(a) *Entitlement to notice, hearing, written response and decision.* (1) Prior to initiating collection action through salary offset, EPA will first provide the employee with the opportunity to pay in full the amount owed, unless such notification will compromise the Government's ultimate ability to collect the debt.

(2) Except as provided in paragraph (b) of this section, each employee from whom the Agency proposes to collect a debt by salary offset under this section is entitled to receive a written notice as described in paragraph (c) of this section.

(3) Each employee owing a debt to the United States which will be collected by salary offset is entitled to request a hearing on the debt. This request must be filed as prescribed in paragraph (d) of this section. The Agency will make appropriate hearing arrangements which are consistent with law and regulations. Where a hearing is held, the employee is entitled to a written decision on the following issues:

(i) The determination of the Agency concerning the existence or amount of the debt; and

(ii) The repayment schedule, if it was not established by written agreement between the employee and the Agency.

(b) *Exceptions to entitlement to notice, hearing, written response and final decision.* The procedural requirements of paragraph (a) of this section are not applicable to any adjustment of pay arising out of an employee's election of coverage or a change in coverage under a Federal benefits program (such as health insurance) requiring periodic deductions from pay, if the amount to be recovered was accumulated over four pay periods or less. However, if the amount to be recovered was accumulated over more than four pay periods the full procedures prescribed under paragraph (d) of this section will be extended to the employee.

(c) *Notification before deductions begin.* Except as provided in paragraph (b) of this section, deductions will not be made unless the employee is first provided with a minimum of 30 calendar days written notice. Notice will be sent by certified mail (return receipt requested), and must include the following:

(1) The Agency's determination that a debt is owed, including the origin, nature, and amount of the debt;

(2) The Agency's intention to collect the debt by means of deductions from the employee's current disposable pay account;

(3) The amount, frequency, proposed beginning date and duration of the intended deductions. (The proposed beginning date for salary offset cannot be earlier than 30 days after the date of notice, unless this would compromise the Government's ultimate ability to resolve the debt);

(4) An explanation of the requirements concerning interest, penalty and administrative costs;

(5) The employee's right to inspect and copy all records relating to the debt or to request and receive a copy of such records;

(6) If not previously provided, the employee's right to enter into a written agreement for a repayment schedule differing from that proposed by the Agency where the terms of the proposed repayment schedule are acceptable to the Agency. (Such an agreement must be in writing and signed by

both the employee and the appropriate EPA official and will be included in the employee's personnel file and documented in the EPA payroll system);

(7) The right to a hearing conducted by a hearing official not under the control of the Administrator, if a request is filed;

(8) The method and time for requesting a hearing;

(9) That the filing of a request for hearing within 15 days of receipt of the original notification will stay the assessment of interest, penalty and administrative costs and the commencement of collection proceedings;

(10) That a final decision on the hearing (if requested) will be issued at the earliest practical date, but no later than 60 days after the filing of the request, unless the employee requests and the hearing official grants a delay in the proceedings;

(11) That knowingly false or frivolous statements, representations or evidence may subject the employee to—

(i) Disciplinary procedures under 5 U.S.C. chapter 75 or any other applicable statutes or regulations;

(ii) Criminal penalties under 18 U.S.C. 286, 287, 1001 and 1002 or other applicable statutory authority; or

(iii) Penalties under the False Claims Act, 31 U.S.C. 3729–3731, or any other applicable statutory authority;

(12) Any other rights and remedies available under statutes or regulations governing the program for which the collection is being made; and

(13) That amounts paid or deducted for the debt, except administrative costs and penalty charges where the entire debt is not waived or terminated, which are later waived or found not owed to the United States will be promptly refunded to the employee.

(d) *Request for hearing.* An employee may request a hearing by filing a written request directly with the Director, Financial Management Division (PM–226F), U.S. Environmental Protection Agency, 401 M Street SW., Washington, DC 20460. The request must state the bases upon which the employee disputes the proposed collection of the debt. The request must be signed by the employee and be received by EPA within 15 days of the employee's receipt of the notification of proposed deductions. The employee should submit in writing all facts, evidence and witnesses which support his/her position to the Director, Financial Management Division, within 15 days of the date of the request for a hearing. The Director, Financial Management Division, will arrange for the services of a hearing official not under the control of the Administrator and will provide the hearing official with all documents relating to the claim.

(e) *Requests for hearing made after time expires.* Late requests for a hearing may be accepted if the employee can show that the delay in filing the request for a hearing was due to circumstances beyond the employee's control.

(f) *Form of hearing, written response and final decision.* (1) Normally, a hearing will consist of the hearing official making a decision based upon a review of the claims file and any materials submitted by the debtor. However, in instances where the hearing official determines that the validity of the debt turns on an issue of veracity or credibility which cannot be resolved through review of documentary evidence, the hearing official at his discretion may afford the debtor an opportunity for an oral hearing. Such oral hearings will consist of an informal conference before a hearing official in which the employee and the Agency will be given the opportunity to present evidence, witnesses and argument. If desired, the employee may be represented by an individual of his/her choice. The Agency shall maintain a summary record of oral hearings provided under these procedures.

(2) Written decisions provided after a request for hearing will, at a minimum, state the facts evidencing the nature and origin of the alleged debt; and the hearing official's analysis, findings and conclusions.

(3) The decision of the hearing official is final and binding on the parties.

(g) *Request for waiver.* In certain instances, an employee may have a statutory right to request a waiver of overpayment of pay or allowances, e.g., 5 U.S.C. 5584 or 5 U.S.C. 5724(i). When an employee requests waiver consideration under a right authorized by statute, further collection on the debt will

be suspended until a final administrative decision is made on the waiver request. However, where it appears that the Government's ability to recover the debt may be adversely affected because of the employee's resignation, termination or other action, suspension of recovery is not required. During the period of the suspension, interest, penalty charges and administrative costs will not be assessed against the debt. The Agency will not duplicate, for purposes of salary offset, any of the procedures already provided the debtor under a request for waiver.

(h) *Method and source of collection.* A debt will be collected in a lump-sum or by installment deductions at established pay intervals from an employee's current pay account, unless the employee and the Agency agree to alternative arrangements for payment. The alternative payment schedule must be in writing, signed by both the employee and the Administrator and will be documented in the Agency's files.

(i) *Limitation on amount of deduction.* The size and frequency of installment deductions generally will bear a reasonable relation to the size of the debt and the employee's ability to pay. However, the amount deducted for any period may not exceed 15 percent of the disposable pay from which the deduction is made, unless the employee has agreed in writing to the deduction of a greater amount. If possible, the installment payments will be in amounts sufficient to liquidate the debt in three years or less. Installment payments of less than $25 normally will be accepted only in the most unusual circumstances.

(j) *Duration of deduction.* If the employee is financially unable to pay a debt in a lump-sum or the amount of the debt exceeds 15 percent of disposable pay, collection will be made in installments. Installment deductions will be made over the period of active duty or employment except as provided in paragraph (a)(1) of this section.

(k) *When deductions may begin.* (1) Deductions to liquidate an employee's debt will begin on the date stated in the Agency's notice of intention to collect from the employee's current pay unless the debt has been repaid or the employee has filed a timely request for hearing on issues for which a hearing is appropriate.

(2) If the employee has filed a timely request for hearing with the Agency, deductions will begin after the hearing official has provided the employee with a final written decision indicating the amount owed the Government. Following the decision by the hearing official, the employee will be given 30 days to repay the amount owed prior to collection through salary offset, unless otherwise provided by the hearing official.

(l) *Liquidation from final check.* If the employee retires, resigns, or the period of employment ends before collection of the debt is completed, the remainder of the debt will be offset from subsequent payments of any nature due the employee (e.g., final salary payment, lump-sum leave, etc.).

(m) *Recovery from other payments due a separated employee.* If the debt cannot be liquidated by offset from any final payment due the employee on the date of separation, EPA will liquidate the debt, where appropriate, by administrative offset from later payments of any kind due the former employee (*e.g.*, retirement pay). Such administrative offset will be taken in accordance with the procedures set forth in § 13.20.

(n) *Employees who transfer to another Federal agency.* If an EPA employee transfers to another Federal agency prior to repaying a debt owed to EPA, the following action will be taken:

(1) The appropriate debt-claim form specified by the Office of Personnel Management (OPM) will be completed and certified to the new paying office by EPA. EPA will certify: That the employee owes a debt; the amount and the basis for the debt; the date on which payment is due; the date the Government's rights to collect the debt first accrued; and that EPA's regulations implementing 5 U.S.C. 5514 have been approved by OPM.

(2) The new paying agency will be advised of the amount which has already been collected, the number of installments and the commencement date for the first installment, if other than the next officially established pay period. EPA will also identify to the new paying agency the actions it has taken and the dates of such actions.

(3) EPA will place or will arrange to have placed in the employee's official personnel file the information required by paragraphs (n) (1) and (2) of this section.

(4) Upon receipt of the official personnel file from EPA, the new paying agency will resume collection from the employee's current pay account and will notify both the employee and EPA of the resumption.

(o) *Interest, penalty and administrative cost.* EPA will assess interest and administrative costs on debts collected under these procedures. The following guidelines apply to the assessment of these costs on debts collected by salary offset:

(1) A processing and handling charge will be assessed on debts collected through salary offset under this section. Where offset begun prior to the employee's receipt of the 30-day written notice of the proposed offset, processing and handling costs will only be assessed after the expiration of the 30-day notice period and after the completion of any hearing requested under paragraph (d) of this section or waiver consideration under paragraph (g) of this section.

(2) Interest will be assessed on all debts not collected within 30 days of either the date of the notice where the employee has not requested a hearing within the allotted time, completion of a hearing pursuant to paragraph (d) of this section, or completion of waiver consideration under paragraph (g) of this section, whichever is later. Interest will continue to accrue during the period of the recovery.

(3) Deductions by salary offset normally begin prior to the time for assessment of a penalty. Therefore, a penalty charge will not be assessed unless deductions occur more than 120 days from the date of notice to the debtor and penalty assessments have not been suspended because of waiver consideration by EPA.

(p) *Non-waiver of right by payment.* An employee's payment under protest of all or any portion of a debt does not waive any rights which the employee may have under either these procedures or any other provision of law.

(q) *Refunds.* EPA will promptly refund to the employee amounts paid or deducted pursuant to this section, the recovery of which is subsequently waived or otherwise found not owing to the United States. Refunds do not bear interest unless specifically authorized by law.

(r) *Time limit for commencing recovery by salary setoff.* EPA will not initiate salary offset to collect a debt more than 10 years after the Government's right to collect the debt first accrued, unless facts material to the right to collect the debt were not known and could not have been known through the exercise of reasonable care by the Government official responsible for discovering and collecting such debts.

§ 13.23 Salary offset when EPA is not the creditor agency.

The requirements below apply when EPA has been requested to collect a debt owed by an EPA employee to another Federal agency.

(a) *Format for the request for recovery.* (1) The creditor agency must complete fully the appropriate claim form specified by OPM.

(2) The creditor agency must certify to EPA on the debt claim form: The fact that the employee owes a debt; the date that the debt first accrued; and that the creditor agency's regulations implementing 5 U.S.C. 5514 have been approved by OPM and send it to the Director, Financial Management Division (PM–226F), U.S. Environmental Protection Agency, 401 M Street SW., Washington, DC 20460.

(3) If the collection is to be made in installments, the creditor agency must also advise EPA of the number of installments to be collected, the amount of each installment, and the commencement date of the first installment, if a date other than the next established pay period.

(4) Unless the employee has consented in writing to the salary deductions or signed a statement acknowledging receipt of the required procedures and this information is attached to the claim form, the creditor agency must indicate the actions it took under its procedures for salary offset and the dates of such actions.

(b) *Processing of the claim by EPA*—(1) *Incomplete claims.* If EPA receives an improperly completed claim form, the

claim form and all accompanying material will be returned to the requesting (creditor) agency with notice that OPM procedures must be followed and a properly completed claim form must be received before any salary offset can be taken. The notice should identify specifically what is needed from the requesting agency for the claim to be processed.

(2) *Complete claims.* If the claim procedures in paragraph (a) of this section have been properly completed, deduction will begin on the next established pay period. EPA will not review the merits of the creditor agency's determinations with respect to the amount or validity of the debt as stated in the debt claim form. EPA will not assess a handling or any other related charge to cover the cost of its processing the claim.

(c) *Employees separating from EPA before a debt to another agency is collected*—(1) *Employees separating from Government service.* If an employee begins separation action before EPA collects the total debt due the creditor agency, the following actions will be taken:

(i) To the extent possible, the balance owed the creditor agency will be liquidated from subsequent payments of any nature due the employee from EPA in accordance with §13.22(1);

(ii) If the total amount of the debt cannot be recovered, EPA will certify to the creditor agency and the employee the total amount of EPA's collection; and

(iii) If EPA is aware that the employee is entitled to payments from the Civil Service Retirement and Disability Fund or other similar payments, it will forward a copy of the claim form to the agency responsible for making such payments as notice that a debt is outstanding. EPA will also send a copy of the claim form to the creditor agency so that it can file a certified claim against the payments.

(2) *Employees who transfer to another Federal agency.* If an EPA employee transfers to another Federal agency before EPA collects the total amount due the creditor agency, the following actions will be taken:

(i) EPA will certify the total amount of the collection made on the debt; and

(ii) The employee's official personnel folder will be sent to the new paying agency. (It is the responsibility of the creditor agency to ensure that the collection is resumed by the new paying agency.)

Subpart D—Compromise of Debts

§13.24 General.

EPA may compromise claims for money or property where the claim, exclusive of interest, penalty and administrative costs, does not exceed $20,000. Where the claim exceeds $20,000, the authority to accept the compromise rests solely with DOJ. The Administrator may reject an offer of compromise in any amount. Where the claim exceeds $20,000 and EPA recommends acceptance of a compromise offer, it will refer the claim with its recommendation to DOJ for approval. The referral will be in the form of the Claims Collection Litigation Report (CCLR) and will outline the basis for EPA's recommendation. EPA refers compromise offers for claims in excess of $100,000 to the Commercial Litigation Branch, Civil Division, Department of Justice, Washington, DC 20530, unless otherwise provided by Department of Justice delegations or procedures. EPA refers offers of compromise for claims of $20,000 to $100,000 to the United States Attorney in whose judicial district the debtor can be found. If the Administrator has a debtor's firm written offer for compromise which is substantial in amount but the Administrator is uncertain as to whether the offer should be accepted, he may refer the offer and the supporting data to DOJ or GAO for action.

§13.25 Standards for compromise.

(a) EPA may compromise a claim pursuant to this section if EPA cannot collect the full amount because the debtor does not have the financial ability to pay the full amount of the debt within a reasonable time, or the debtor refuses to pay the claim in full and the Government does not have the ability to enforce collection in full within a reasonable time by enforced collection proceedings. In evaluating the acceptability of the offer, the Administrator

may consider, among other factors, the following:

(1) *Individual debtors.* (i) Age and health of the debtor;

(ii) Present and potential income;

(iii) Inheritance prospects;

(iv) The possibility that assets have been concealed or improperly transferred by the debtor;

(v) The availability of assets or income which may be realized by enforced collection proceedings; or

(vi) The applicable exemptions available to the debtor under State and Federal law in determining the Government's ability to enforce collection.

(2) *Municipal and quasi-municipal debtors.* (i) The size of the municipality or quasi-municipal entity;

(ii) The availability of current and future resources sufficient to pay the debt (*e.g.,* bonding authority, rate adjustment authority, or taxing authority); or

(iii) The ratio of liabilities (both short and long term) to assets.

(3) *Commercial debtors.* (i) Ratio of assets to liabilities;

(ii) Prospects of future income or losses; or

(iii) The availability of assets or income which may be realized by enforced collection proceedings.

(b) EPA may compromise a claim, or recommend acceptance of a compromise to DOJ, where there is substantial doubt concerning the Government's ability to prove its case in court for the full amount of the claim, either because of the legal issues involved or a bona fide dispute as to the facts. The amount accepted in compromise in such cases will fairly reflect the probability of prevailing on the legal issues involved, considering fully the availability of witnesses and other evidentiary data required to support the Government's claim. In determining the litigative risks involved, EPA will give proportionate weight to the likely amount of court costs and attorney fees the Government may incur if it is unsuccessful in litigation.

(c) EPA may compromise a claim, or recommend acceptance of a compromise to DOJ, if the cost of collection does not justify the enforced collection of the full amount of the debt. The amount accepted in compromise in such cases may reflect an appropriate discount for the administrative and litigative costs of collection, taking into consideration the time it will take to effect collection. Costs of collection may be a substantial factor in the settlement of small claims, but normally will not carry great weight in the settlement of large claims. In determining whether the cost of collection justifies enforced collection of the full amount, EPA may consider the positive effect that enforced collection of the claim may have on the collection of other similar claims.

(d) Statutory penalties, forfeitures or debts established as an aid to enforcement and to compel compliance may be compromised where the Administrator determines that the Agency's enforcement policy, in terms of deterrence and securing compliance (both present and future), will be adequately served by accepting the offer.

§ 13.26 Payment of compromised claims.

The Administrator normally will not approve a debtor's request to pay a compromised claim in installments. However, where the Administrator determines that payment of a compromise by installments is necessary to effect collection, a debtor's request to pay in installments may be approved. Normally, where installment repayment is approved, the debtor will be required to execute a confess-judgment agreement which accelerates payment of the balance due upon default.

§ 13.27 Joint and several liability.

When two or more debtors are jointly and severally liable, collection action will not be withheld against one debtor until the other or others pay their proportionate share. The amount of a compromise with one debtor is not precedent in determining compromises from other debtors who have been determined to be jointly and severally liable on the claim.

§ 13.28 Execution of releases.

Upon receipt of full payment of a claim or the amount compromised, EPA will prepare and execute a release on behalf of the United States. The release will include a provision which

voids the release if it was procured by fraud, misrepresentation, a false claim or by mutual mistake of fact.

Subpart E—Suspension of Collection Action

§13.29 Suspension—general.

The Administrator may suspend the Agency's collection actions on a debt where the outstanding debt principal does not exceed $20,000, the Government cannot presently collect or enforce collection of any significant sum from the debtor, the prospects of future collection justify retention of the debt for periodic review and there is no risk of expiration of the statute of limitations during the period of suspension. Additionally, the Administrator may waive the assessment of interest, penalty charges and administrative costs during the period of the suspension. Suspension will be for an established time period and generally will be reviewed at least every six months to ensure the continued propriety of the suspension. DOJ approval is required to suspend debts exceeding $20,000. Unless otherwise provided by DOJ delegations or procedures, the Administrator refers requests for suspension of debts of $20,000 to $100,000 to the United States Attorney in whose district the debtor resides. Debts exceeding $100,000 are referred to the Commercial Litigation Branch, Civil Division, Department of Justice, for approval.

§13.30 Standards for suspension.

(a) *Inability to locate debtor.* The Administrator may suspend collection on a debt where he determines that the debtor cannot be located presently but that there is a reasonable belief that the debtor can be located in the future.

(b) *Financial condition of debtor.* The Administrator may suspend collection action on a claim when the debtor owns no substantial equity in real or personal property and is unable to make payment on the claim or effect a compromise but the debtor's future financial prospects justify retention of the claim for periodic review, provided that:

(1) The applicable statute of limitations will not expire during the period of the suspension, can be tolled or has started running anew;

(2) Future collection can be effected by offset, notwithstanding the 10-year statute of limitations for administrative offsets; or

(3) The debtor agrees to pay interest on the debt and suspension is likely to enhance the debtor's ability to fully pay the principal amount of the debt with interest at a later date.

(c) *Request for waiver or administrative review—mandatory.* The Administrator will suspend collection activity where a statute provides for mandatory waiver consideration or administrative review prior to agency collection of a debt. The Administrator will suspend EPA's collection actions during the period provided for the debtor to request review or waiver and during the period of the Agency's evaluation of the request.

(d) *Request for waiver or administrative review—permissive.* The Administrator may suspend collection activities on debts of $20,000 or less during the pendency of a permissive waiver or administrative review where he determines that:

(1) There is a reasonable possibility that waiver will be granted and the debtor may be found not owing the debt (in whole or in part);

(2) The Government's interest is protected, if suspension is granted, by the reasonable assurance that the debt can be recovered if the debtor does not prevail; or

(3) Collection of the debt will cause undue hardship to the debtor.

(e) *Refund barred by statute or regulation.* The Administrator will ordinarily suspend collection action during the pendency of his consideration of a waiver request or administrative review where statute and regulation preclude refund of amounts collected by the Agency should the debtor prevail. The Administrator may decline to suspend collection where he determines that the request for waiver or administrative review is frivolous or was made primarily to delay collection.

Subpart F—Termination of Debts

§ 13.31 Termination—general.

The Administrator may terminate collection actions and write-off debts, including accrued interest, penalty and administrative costs, where the debt principal does not exceed $20,000. If the debt exceeds $20,000, EPA obtains the approval of DOJ in order to terminate further collection actions. Unless otherwise provided for by DOJ regulations or procedures, requests to terminate collection on debts in excess of $100,000 are referred to the Commercial Litigation Branch, Civil Division, Department of Justice, for approval. Debts in excess of $20,000 but $100,000 or less are referred to the United States Attorney in whose judicial district the debtor can be found.

§ 13.32 Standards for termination.

A debt may be terminated where the Administrator determines that:

(a) The Government cannot collect or enforce collection of any significant sum from the debtor, having due regard for available judicial remedies, the debtor's ability to pay, and the exemptions available to the debtor under State and Federal law;

(b) The debtor cannot be located, there is no security remaining to be liquidated, the applicable statute of limitations has expired, and the prospects of collecting by offset are too remote to justify retention of the claim;

(c) The cost of further collection action is likely to exceed the amount recoverable;

(d) The claim is determined to be legally without merit; or

(e) The evidence necessary to prove the claim cannot be produced or the necessary witnesses are unavailable and efforts to induce voluntary payment have failed.

Subpart G—Referrals

§ 13.33 Referrals to the Department of Justice.

(a) *Prompt referral.* The Administrator refers to DOJ for litigation all claims on which aggressive collection actions have been taken but which could not be collected, compromised, suspended or terminated. Referrals are made as early as possible, consistent with aggressive agency collection action, and within the period for bringing a timely suit against the debtor.

(1) Unless otherwise provided by DOJ regulations or procedures, EPA refers for litigation debts of more than $100,000 to the Commercial Litigation Branch, Civil Division, Department of Justice, Washington, DC 20530.

(2) Unless otherwise provided by DOJ regulations or procedures, EPA refers for litigation debts of $100,000 or less to the United States Attorney in whose judicial district the debtor can be found.

(b) *Claims Collection Litigation Report (CCLR).* Unless an exception has been granted by DOJ, the CCLR is used for referrals of all administratively uncollectible claims to DOJ and is used to refer all offers of compromise.

Supbart H—Referral of Debts to IRS for Tax Refund Offset

Source: 59 FR 651, Jan. 5, 1994, unless otherwise noted.

§ 13.34 Purpose.

This subpart establishes procedures for the Environmental Protection Agency (EPA) to refer past-due debts to the Internal Revenue Service (IRS) for offset against the income tax refunds of persons owing debts to EPA. It specifies the Agency procedures and the rights of the debtor applicable to claims for the payment of debts owed to EPA.

§ 13.35 Applicability and scope.

(a) This subpart implements 31 U.S.C. 3720A, which authorizes the IRS to reduce a tax refund by the amount of a past-due legally enforceable debt owed to the United States.

(b) For purposes of this section, a past-due legally enforceable debt referable to the IRS is a debt which is owed to the United States and:

(1) Except in the case of a judgment debt, has been delinquent for at least three months but has not been delinquent for more than ten years at the time the offset is made;

(2) Cannot be currently collected pursuant to the salary offset provisions of 5 U.S.C. 5514(a)(1);

(3) Is ineligible for administrative offset under 31 U.S.C. 3716(a) by reason of 31 U.S.C. 3716(c)(2) or cannot be collected by administrative offset under 31 U.S.C. 3716(a) by the Agency against amounts payable to or on behalf of the debtor by or on behalf of the Agency;

(4) With respect to which EPA has given the taxpayer at least 60 days from the date of notification to present evidence that all or part of the debt is not past-due or not legally enforceable, has considered evidence presented by such taxpayer, if any, and has determined that an amount of such debt is past-due and legally enforceable;

(5) Has been disclosed by EPA to a consumer reporting agency as authorized by 31 U.S.C. 3711(f), unless a consumer reporting agency would be prohibited from using such information by 15 U.S.C. 1681c, or unless the amount of the debt does not exceed $100.00;

(6) With respect to which EPA has notified or has made a reasonable attempt to notify the taxpayer that the debt is past-due and, unless repaid within 60 days thereafter, the debt will be referred to the IRS for offset against any overpayment of tax;

(7) Is at least $25.00; and

(8) All other requirements of 31 U.S.C. 3720A and the Department of the Treasury regulations at 26 CFR 301.6402–6 relating to the eligibility of a debt for tax return offset have been satisfied.

§13.36 Administrative charges.

In accordance with §13.11, all administrative charges incurred in connection with the referral of a debt to the IRS shall be assessed on the debt and thus increase the amount of the offset.

§13.37 Notice requirement before offset.

A request for reduction of an IRS tax refund will be made only after EPA makes a determination that an amount is owed and past-due and provides the debtor with 60 days written notice. EPA's notice of intention to collect by IRS tax refund offset (Notice of Intent) will state:

(a) The amount of the debt;

(b) That unless the debt is repaid within 60 days from the date of EPA's Notice of Intent, EPA intends to collect the debt by requesting the IRS to reduce any amounts payable to the debtor as refunds of Federal taxes paid by an amount equal to the amount of the debt and all accumulated interest and other charges;

(c) That the debtor has a right to present evidence that all or part of the debt is not past-due or not legally enforceable; and

(d) A mailing address for forwarding any written correspondence and a contact name and phone number for any questions.

§13.38 Review within the Agency.

(a) *Notification by debtor.* A debtor who receives a Notice of Intent has the right to present evidence that all or part of the debt is not past-due or not legally enforceable. To exercise this right, the debtor must:

(1) Send a written request for a review of the evidence to the address provided in the notice;

(2) State in the request the amount disputed and the reasons why the debtor believes that the debt is not past-due or is not legally enforceable; and

(3) Include in the request any documents which the debtor wishes to be considered or state that additional information will be submitted within the remainder of the 60-day period.

(b) *Submission of evidence.* The debtor may submit evidence showing that all or part of the debt is not past-due or not legally enforceable along with the notification required by paragraph (a) of this section. Failure to submit the notification and evidence within 60 days will result in an automatic referral of the debt to the IRS without further action by EPA.

(c) *Review of the evidence.* EPA will consider all available evidence related to the debt. Within 30 days, if feasible, EPA will notify the debtor whether EPA has sustained, amended, or cancelled its determination that the debt is past-due and legally enforceable.

§13.39 Agency determination.

(a) Following review of the evidence, EPA will issue a written decision.

(b) If EPA either sustains or amends its determination, it shall notify the debtor of its intent to refer the debt to the IRS for offset against the debtor's

Federal income tax refund. If EPA cancels its original determination, the debt will not be referred to IRS.

§ 13.40 Stay of offset.

If the debtor timely notifies the EPA that he or she is exercising the right described in § 13.38(a) and timely submits evidence in accordance with § 13.38(b), any notice to the IRS will be stayed until the issuance of a written decision which sustains or amends its original determination.

PART 14—EMPLOYEE PERSONAL PROPERTY CLAIMS

Sec.
14.1 Scope and purpose.
14.2 Definitions.
14.3 Incident to service.
14.4 Reasonable and proper.
14.5 Who may file a claim.
14.6 Time limits for filing a claim.
14.7 Where to file a claim.
14.8 Investigation of claims.
14.9 Approval and payment of claims.
14.10 Procedures for reconsideration.
14.11 Principal types of allowable claims.
14.12 Principal types of unallowable claims.
14.13 Items fraudulently claimed.
14.14 Computation of award.

AUTHORITY: Military Personnel and Civilian Employees' Claims Act of 1964, as amended (31 U.S.C. 3721).

SOURCE: 51 FR 24146, July 2, 1986, unless otherwise noted.

§ 14.1 Scope and purpose.

This part prescribes regulations for the Military Personnel and Civilian Employees' Claims Act of 1964 (the Act), 31 U.S.C. 3721. The Act allows the Administrator of the U.S. Environmental Protection Agency (EPA) to settle and pay claims of EPA employees for damage to or loss of their personal property which was incident to service. A claim under the Act is allowed only where the claim is substantiated and the Administrator determines that possession of the property was reasonable or proper under the circumstances existing at the time and place of the loss and no part of the loss was caused by any negligent or wrongful act or omission of the employee or his/her agent.

§ 14.2 Definitions.

As used in this part:

(a) *EPA Claims Officer* is the Agency official delegated the responsibility by the Administrator to carry out the provisions of the Act.

(b) *Claim* means a demand for payment by an employee or his/her representative for the value or the repair cost of an item of personal property damaged, lost or destroyed as an incident to government service.

(c) *Employee* means a person appointed to a position with EPA.

(d) *Settle* means the act of considering, ascertaining, adjusting, determining or otherwise resolving a claim.

(e) *Accrual date* means the date of the incident causing the loss or damage or the date on which the loss or damage should have been discovered by the employee through the exercise of reasonable care.

(f) *Depreciation* is the reduction in value of an item caused by the elapse of time between the date of acquisition and the date of loss or damage.

§ 14.3 Incident to service.

In order for a claim to be allowed under this part, the EPA Claims Officer must determine that the item of personal property, at the time of damage or loss, was used by the employee as an incident to government service. An item is incident to service when possession of the item by the employee had substantial relationship to the employee's performance of duty. Whether an item is incident to service is determined by the facts of each claim. The employee has the burden of showing that the item was incident to his/her governmental service.

§ 14.4 Reasonable and proper.

EPA does not insure its employees from every loss or damage to personal property they may sustain. In order for a claim to be allowed, the item must not only have been incident to service, it must also have been reasonable and proper for the employee to possess the item at the time and place of its loss or damage. Generally, the possession of an item is reasonable and proper when the item is of a type and quantity which EPA reasonably expected its employees to possess at the time and

place of the loss or damage. Consequently, items which are exceptionally expensive, excessive quantities of otherwise allowable items, personal items which are used in place of items usually provided to employees by EPA or items which are primarily of aesthetic value are not considered reasonable or proper items and are unallowable.

§14.5 Who may file a claim.

A claim may be filed by an employee or by his/her authorized agent or legal representative. If a claim is otherwise allowable under this part, a claim can be filed by a surviving spouse, child, parent, brother or sister of a deceased employee.

§14.6 Time limits for filing a claim.

A claim under this part is considered by the EPA Claims Officer only if it is in writing and received within two years after the claim accrues. The EPA Claims Officer may consider a claim not filed within this period when the claim accrued during a period of armed conflict and the requirements of 31 U.S.C. 3721(g) are met.

§14.7 Where to file a claim.

An employee or his/her representative may file a claim with his/her Administrative Office or the Safety Office for the facility. The employee should complete and submit to the Administrative Office or the Safety Office a completed EPA Form 3370–1, ''Employee Claim for Loss of or Damage to Personal Property.'' That Office then forwards the form and any other relevant information to the EPA Claims Officer, Office of General Counsel (LE–132G), 401 M Street SW., Washington, DC 20460.

§14.8 Investigation of claims.

The EPA Claims Officer investigates claims filed under this part. The EPA Claims Officer may request additional documentation from an employee (e.g., repair estimates and receipts), interview witnesses, and conduct any further investigation he believes is warranted by the facts of the claim.

§14.9 Approval and payment of claims.

(a) EPA's approval and payment of a claim is limited by the Act to $25,000. The EPA Claims Officer considers, adjusts, determines, compromises and settles all claims filed under this part. The decision of the EPA Claims Officer is final unless reconsideration under §14.10 is granted.

(b) The EPA Claims Officer will approve and pay claims filed for a deceased employee by persons specified in §14.5 in the following order:

(1) The spouse's claim.
(2) A child's claim.
(3) A parent's claim.
(4) A brother's or sister's claim.

§14.10 Procedures for reconsideration.

The EPA Claims Officer, at his discretion, may reconsider a decision when the employee establishes that an error was made in the computation of the award or that evidence or material facts were unavailable to the employee at the time of the filing of the claim and the failure to provide the information was not the result of the employee's lack of care. An employee seeking reconsideration of a decision must file, within 30 days of the date of the decision, a written request with the EPA Claims Officer for reconsideration. The request for reconsideration must specify, where applicable, the error, the evidence or material facts not previously considered by the EPA Claims Officer and the reason why the employee believes that the evidence or facts previously were not available.

§14.11 Principal types of allowable claims.

(a) *General.* A claim under this part is allowed for tangible personal property of a type and quantity that was reasonable and proper for the employee to possess under the circumstances at the time of the loss or damage. In evaluating whether a claim is allowable, the EPA Claims Officer may consider such factors as: The employee's use of the item; whether EPA generally is aware that such items are used by its employees; or whether the loss was caused by a failure of EPA to provide adequate protection against the loss.

(b) *Examples of claims which are allowable.* Claims which are ordinarily allowed include loss or damage which occurred:

(1) In a place officially designated for storage of property such as a warehouse, office, garage, or other storage place;

(2) In a marine, rail, aircraft, or other common disaster or natural disaster such as a fire, flood, or hurricane;

(3) When the personal property was subjected to an extraordinary risk in the employee's performance of duty, such as in connection with an emergency situation, a civil disturbance, common or natural disaster, or during efforts to save government property or human life;

(4) When the property was used for the benefit of the government at the specific direction of a supervisor;

(5) When the property was money or other valuables deposited with an authorized government agent for safekeeping; and

(6) When the property was a vehicle which was subjected to an extraordinary risk in the employee's performance of duty and the use of the vehicle was at the specific direction of the employee's supervisor.

(c) *Claims for articles of clothing.* Claims for loss or damage to clothing and accessories worn by an employee may be allowed where:

(1) The damage or loss occurred during the employee's performance of official duty in an unusual or extraordinary risk situation;

(2) The loss or damage occurred during the employee's response to an emergency situation, to a natural disaster such as fire, flood, hurricane, or to a man-made disaster such as a chemical spill;

(3) The loss or damage was caused by faulty or defective equipment or furniture maintained by EPA; or

(4) The item was stolen even though the employee took reasonable precautions to protect the item from theft.

(d) *Claims for loss or damage to household items.* (1) Claims for damages to household goods may be allowed where:

(i) The loss or damages occurred while the goods were being shipped pursuant to an EPA authorized change in duty station;

(ii) The employee filed a claim for the damages with the appropriate carrier; and

(iii) The employee substantiates that he/she has suffered a loss in excess of the amount paid by the carrier.

(2) Where a carrier has refused to make an award to an employee because of his/her failure to comply with the carrier's claims procedures, any award by EPA will be reduced by the maximum amount payable for the item by the carrier under its contract of shipment. Where an employee fails to notify the carrier of damages or loss, either at the time of delivery of the household goods or within a reasonable time after discovery, any award by EPA will be reduced by the amount of the carrier's maximum contractual liability for the damage or loss. The employee has the burden of proving his/her entitlement to reimbursement from EPA for amounts in excess of that allowed by the carrier.

§ 14.12 Principal types of unallowable claims.

Claims that ordinarily will not be allowed include:

(a) Loss or damage totaling less than $25;

(b) Money or currency, except when deposited with an authorized government agency for safekeeping;

(c) Loss or damage to an item of extraordinary value or to an antique where the item was shipped with household goods, unless the employee filed a valid appraisal or authentication with the carrier prior to shipment of the item;

(d) Loss of bankbooks, checks, notes, stock certifications, money orders, or travelers checks;

(e) Property owned by the United States unless the employee is financially responsible for it to another government agency;

(f) Claims for loss or damage to a bicycle or a private motor vehicle, unless allowable under § 14.11(b)(6);

(g) Losses of insurers or subrogees;

(h) Losses recoverable from insurers or carriers;

(i) Losses recovered or recoverable pursuant to contract;

(j) Claims for damage or loss caused, in whole or in part, by the negligent or wrongful acts of the employee or his/her agent;

(k) Property used for personal business or profit;

(l) Theft from the possession of the employee unless the employee took reasonable precautions to protect the item from theft;

(m) Property acquired, possessed or transported in violation of law or regulations;

(n) Unserviceable property; or

(o) Damage or loss to an item during shipment of household goods where the damage or loss was caused by the employee's negligence in packing the item.

§ 14.13 Items fraudulently claimed.

Where the EPA Claims Officer determines that an employee has intentionally misrepresented the cost, condition, cost of repair or a material fact concerning a claim, he/she may, at his discretion, deny the entire amount claimed for the item. Further, where the EPA Claims Officer determines that the employee intentionally has materially misrepresented the costs, conditions or nature of repairs of the claim, he will refer it to appropriate officials (e.g., Inspector General, the employee's supervisor, etc.) for action.

§ 14.14 Computation of award.

(a) The amount awarded on any item may not exceed its adjusted cost. Adjusted cost is either the purchase price of the item or its value at the time of acquisition, less appropriate depreciation. The amount normally payable for property damaged beyond economical repair is its depreciated value immediately before the loss or damage, less any salvage value. If the cost of repair is less than the depreciated value, it will be considered to be economically repairable and only the cost of repair will be allowable.

(b) Notwithstanding a contract to the contrary, the representative of an employee is limited by 31 U.S.C. 3721(i) to receipt of not more than 10 percent of the amount of an award under this part for services related to the claim. A person violating this paragraph is subject to a fine of not more than $1,000. 31 U.S.C. 3721(i).

PART 16—IMPLEMENTATION OF PRIVACY ACT OF 1974

Sec.

16.1 Purpose and scope.
16.2 Definitions.
16.3 Procedures for requests pertaining to individual records in a record system.
16.4 Times, places, and requirements for identification of individuals making requests.
16.5 Disclosure of requested information to individuals.
16.6 Special procedures: Medical records.
16.7 Request for correction or amendment of record.
16.8 Initial determination on request for correction or amendment of record.
16.9 Appeal of initial adverse agency determination on request for correction or amendment.
16.10 Disclosure of record to person other than the individual to whom it pertains.
16.11 Fees.
16.12 Penalties.
16.13 General exemptions.
16.14 Specific exemptions.

AUTHORITY: 5 U.S.C. 552a.

SOURCE: 40 FR 53582, Nov. 19, 1975, unless otherwise noted.

§ 16.1 Purpose and scope.

(a) This part sets forth the Environmental Protection Agency procedures under the Privacy Act of 1974 as required by 5 U.S.C. 552a(f).

(b) These procedures describe how an individual may request notification of whether EPA maintains a record pertaining to him or her in any of its systems of records, request access to the record or to an accounting of its disclosure, request that the record be amended or corrected, and appeal an initial adverse determination concerning any such request.

(c) These procedures apply only to requests by individuals and only to records maintained by EPA, excluding those systems specifically exempt under §§ 16.13 and 16.14 and those determined as government-wide and published by the Civil Service Commission in 5 CFR parts 293 and 297.

§ 16.2 Definitions.

As used in this part:

(a) The terms *individual, maintain, record, system of records,* and *routine use* shall have the meaning given them by 5 U.S.C. 552a (a)(2), (a)(3), (a)(4), (a)(5) and (a)(7), respectively.

(b) *EPA* means the Environmental Protection Agency.

(c) *Working days* means calendar days excluding Saturdays, Sundays, and legal public holidays.

§ 16.3 Procedures for requests pertaining to individual records in a record system.

Any individual who wishes to have EPA inform him or her whether a system of records maintained by EPA contains any record pertaining to him or her which is retrieved by name or personal identifier, or who wishes to request access to any such record, shall submit a written request in accordance with the instructions set forth in EPA's annual notice of systems for that system of records. This request shall include:

(a) The name of the individual making the request;

(b) The name of the system of records (as set forth in the EPA notice of systems) to which the request relates;

(c) Any other information which the system notice indicates should be included; and

(d) If the request is for access, a statement as to whether a personal inspection or a copy by mail is desired.

§ 16.4 Times, places, and requirements for identification of individuals making requests.

(a) If an individual submitting a request for access under § 16.3 has asked that EPA authorize a personal inspection of records, and EPA has granted the request, he or she may present himself or herself at the time and place specified in EPA's response or arrange another time with the appropriate agency official.

(b) Prior to inspection of records, an individual shall present sufficient identification (e.g., driver's license, employee identification card, social security card, credit card) to establish that he or she is the individual to whom the records pertain. An individual who is unable to provide such identification shall complete and sign, in the presence of an agency official, a statement declaring his or her identity and stipulating that he or she understands it is a misdemeanor punishable by fine up to $5,000 to knowingly and willfully seek or obtain access to records about another individual under false pretenses.

(c) If an individual, having requested personal inspection of his or her records, wishes to have another person accompany him or her during inspection, he or she shall submit a written statement authorizing disclosure in the presence of the other person(s).

(d) An individual who has made a personal inspection of records may then request copies of those records. Such requests may be granted, but fees may be charged in accordance with § 16.11.

(e) If an individual submitting a request under § 16.3 wishes to have copies furnished by mail, he or she must include with the request sufficient data to allow EPA to verify his or her identity. Should sensitivity of the records warrant it, EPA may require a requester to submit a signed and notarized statement indicating that he or she is the individual to whom the records pertain and that he or she understands it is a misdemeanor punishable by fine up to $5,000 to knowingly and willfully seek or obtain access to records about another individual under false pretenses. Such mail requests may be granted, but fees may be charged in accordance with § 16.11.

(f) No verification of identity will be required where the records sought are publicly available under the Freedom of Information Act, as EPA procedures under 40 CFR part 2 will then apply.

§ 16.5 Disclosure of requested information to individuals.

(a) Each request received will be acted upon promptly.

(b) Within 10 working days of receipt of a request, the system manager shall acknowledge the request. Whenever practicable, the acknowledgment will indicate whether or not access will be granted and, if so, when and where. When access is to be granted, it shall be provided within 30 working days of first receipt. If the agency is unable to meet this deadline, the records system manager shall so inform the requester

stating reasons for the delay and an estimate of when access will be granted.

(c) If a request pursuant to §16.3 for access to a record is in a system of records which is exempted, the records system manager will determine whether the information will nonetheless be made available. If the determination is to deny access, the reason for denial and the appeal procedure will be given to the requester.

(d) Any person whose request is initially denied may appeal that denial to the Privacy Act Officer, who shall make an appeal determination within 10 working days.

(e) If the appeal under paragraph (d) of this section is denied, the requester may bring a civil action under 5 U.S.C. 552a(g) to seek review of the denial.

§16.6 Special procedures: Medical records.

Should EPA receive a request for access to medical records (including psychological records) disclosure of which the system manager determines would be harmful to the individual to whom they relate, EPA may refuse to disclose the records directly to the individual and instead offer to transmit them to a physician designated by the individual.

§16.7 Request for correction or amendment of record.

(a) An individual may request correction or amendment of any record pertaining to him or her in a system of records maintained by EPA by submitting to the system manager, in writing, the following:

(1) The name of the individual making the request;

(2) The name of the system, as described in the notice of systems;

(3) A description of the nature and substance of the correction or amendment request; and

(4) Any additional information specified in the system notice.

(b) Any person submitting a request under this section shall include sufficient information in support of that request to allow EPA to apply the standards set forth in 5 U.S.C. 552a (e)(1) and (e)(5).

(c) Any person whose request is denied may appeal that denial to the Privacy Act Officer.

(d) In the event that appeal is denied, the requester may bring a civil action to seek review of the denial, under 5 U.S.C. 552a(g).

§16.8 Initial determination on request for correction or amendment of record.

(a) Within 10 working days of receipt of a request for amendment or correction, the system manager shall acknowledge the request, and promptly either:

(1) Make any correction, deletion, or addition which the requester believes should be made; or

(2) Inform the requester of his or her refusal to correct or amend the record, the reason for refusal, and the procedures for appeal.

(b) If the system manager is unable to comply with the preceding paragraphs within 30 working days of his or her receipt of a request, he or she will inform the requester of that fact, the reasons, and an estimate of when a determination will be reached.

(c) In conducting the review of the request, the system manager will be guided by the requirements of 5 U.S.C. 552a (e)(1) and (e)(5).

(d) If the system manager determines to grant all or any portion of the request, he or she will:

(1) Advise the individual of that determination;

(2) Make the correction or amendment; and

(3) So inform any person or agency outside EPA to whom the record has been disclosed, and, where an accounting of that disclosure is maintained in accordance with 5 U.S.C. 552a(c), note the occurrence and substance of the correction or amendment in the accounting.

(e) If the system manager determines not to grant all or any portion of a request for correction or amendment, he or she will:

(1) Comply with paragraph (d)(3) of this section (if necessary);

(2) Advise the individual of the determination and its basis;

(3) Inform the individual that an appeal may be made; and

(4) Describe the procedures for making the appeal.

(f) If EPA receives from another Federal agency a notice of correction or amendment of information furnished by that agency and contained in one of EPA's systems of records, the system manager shall advise the individual and make the correction as if EPA had originally made the correction or amendment.

§ 16.9 Appeal of initial adverse agency determination on request for correction or amendment.

(a) Any individual whose request for correction or amendment is initially denied by EPA and who wishes to appeal may do so by letter to the Privacy Act Officer. The appeal shall contain a description of the initial request sufficient to identify it.

(b) The Privacy Act Officer shall make a final determination not later than 30 working days from the date on which the individual requests the review, unless, for good cause shown, the Privacy Act Officer extends the 30-day period and notifies the requester. Such extension will be utilized only in exceptional circumstances.

(c) In conducting the review of an appeal, the Privacy Act Officer will be guided by the requirements of 5 U.S.C. 552a (e)(1) and (e)(5).

(d) If the Privacy Act Officer determines to grant all or any portion of an appeal he or she shall so inform the requester and EPA shall make the correction or amendment and comply with § 16.8(d)(3).

(e) If the Privacy Act Officer determines not to grant all or any portion of an appeal he or she shall inform the requester:

(1) Of the determination and its basis;

(2) Of the requester's right to file a concise statement of reasons for disagreeing with EPA's decision;

(3) Of the procedures for filing such statement of disagreement;

(4) That such statements of disagreements will be made available in subsequent disclosures of the record, together with an agency statement (if deemed appropriate) summarizing its refusal;

(5) That prior recipients of the disputed record will be provided with statements as in paragraph (e)(4) of this section, to the extent that an accounting of disclosures is maintained under 5 U.S.C. 552a(c); and

(6) Of the requester's right to seek judicial review under 5 U.S.C. 552a(g).

§ 16.10 Disclosure of record to person other than the individual to whom it pertains.

EPA shall not disclose any record which is contained in a system of records it maintains except pursuant to a written request by, or with the written consent of, the individual to whom the record pertains, unless the disclosure is authorized by one or more of the provisions of 5 U.S.C. 552a(b).

§ 16.11 Fees.

No fees shall be charged for providing the first copy of a record or any portion to an individual to whom the record pertains. The fee schedule for reproducing other records is the same as that set forth in 40 CFR 2.120.

§ 16.12 Penalties.

The Act provides, in pertinent part:

''Any person who knowingly and willfully requests or obtains any record concerning an individual from an agency under false pretenses shall be guilty of a misdemeanor and fined not more than $5,000.'' (5 U.S.C. 552a(i)(3).)

§ 16.13 General exemptions.

(a) *Systems of records affected.*

¶EPA–4 OIG Criminal Investigative Index and Files—EPA/OIG.

¶EPA–17 NEIC Criminal Investigative Index and Files—EPA/NEIC/OCI.

(b) *Authority.* Under 5 U.S.C. 552a(j)(2), the head of any agency may by rule exempt any system of records within the agency from certain provisions of the Privacy Act of 1974, if the system of records is maintained by an agency or component thereof which performs as its principal function any activity pertaining to the enforcement of criminal laws and which consists of:

(1) Information compiled for the purpose of identifying individual criminal offenders and alleged offenders and consisting only of identifying data and notations of arrests, the nature and

disposition of criminal charges, sentencing, confinement, release, and parole and probation status;

(2) Information compiled for the purpose of a criminal investigation, including reports of informants and investigators, and associated with an identifiable individual; or

(3) Reports identifiable to an individual compiled at any stage of the process of enforcement of the criminal laws from arrest or indictment through release from supervision.

(c) *Scope of exemption.* (1) The EPA–4 system of records identified in § 16.13(a) is maintained by the Office of Investigations of the Office of Inspector General (OIG), a component of EPA which performs as its principal function activities pertaining to the enforcement of criminal laws. Authority for the criminal law enforcement activities of the OIG's Office of Investigations is the Inspector General Act of 1978, 5 U.S.C. app.

(2) The EPA–17 system of records identified in § 16.13(a) is maintained by the Office of Criminal Investigations (OCI) of the National Enforcement Investigations Center (NEIC), a component of EPA which performs as its principal function activities pertaining to the enforcement of criminal laws. Authority for the criminal law enforcement activities of the NEIC's Office of Criminal Investigations is 28 U.S.C. 533, with appointment letter from Benjamin Civiletti, Attorney General, to Douglas Costle, Administrator, EPA, dated January 16, 1981.

(3) The systems of records identified in § 16.13(a) are exempted from the following provisions of the Privacy Act of 1974: 5 U.S.C. 552a(c)(3) and (4); (d); (e)(1), (2), (3), (4)(G), (H), and (I), (5), and (8); (f); and (g).

(4) To the extent that the exemption claimed under 5 U.S.C. 552a(j)(2) is held to be invalid for the systems of records identified in § 16.13(a), then an exemption under 5 U.S.C. 552a(k)(2) is claimed for these systems of records.

(d) *Reasons for exemption.* The systems of records identified in § 16.13(a) are exempted from the above provisions of the Privacy Act of 1974 for the following reasons:

(1) 5 U.S.C. 552a(c)(3) requires an agency to make the accounting of each disclosure of records available to the individual named in the record at his request. These accountings must state the date, nature, and purpose of each disclosure of a record and the name and address of the recipient. Accounting for each disclosure would alert the subjects of an investigation to the existence of the investigation and the fact that they are subjects of the investigation. The release of such information to the subjects of an investigation would provide them with significant information concerning the nature of the investigation, and could seriously impede or compromise the investigation, endanger the physical safety of confidential sources, witnesses, law enforcement personnel and their families, and lead to the improper influencing of witnesses, the destruction of evidence, or the fabrication of testimony.

(2) 5 U.S.C. 552a(c)(4) requires an agency to inform any person or other agency about any correction or notation of dispute made by the agency in accordance with subsection (d) of the Act. Since EPA is claiming that these systems of records are exempt from subsection (d) of the Act, concerning access to records, this section is inapplicable and is exempted to the extent that these systems of records are exempted from subsection (d) of the Act.

(3) 5 U.S.C. 552a(d) requires an agency to permit an individual to gain access to records pertaining to him, to request amendment to such records, to request a review of an agency decision not to amend such records, and to contest the information contained in such records. Granting access to records in these systems of records could inform the subject of an investigation of an actual or potential criminal violation of the existence of that investigation, of the nature and scope of the information and evidence obtained as to his activities, of the identity of confidential sources, witnesses, and law enforcement personnel, and could provide information to enable the subject to avoid detection or apprehension. Granting access to such information could seriously impede or compromise an investigation, endanger the physical safety of confidential sources, witnesses, law enforcement personnel and

their families, lead to the improper influencing of witnesses, the destruction of evidence, or the fabrication of testimony, and disclose investigative techniques and procedures. In addition, granting access to such information could disclose classified, security-sensitive, or confidential business information and could constitute an unwarranted invasion of the personal privacy of others.

(4) 5 U.S.C. 552a(e)(1) requires each agency to maintain in its records only such information about an individual as is relevant and necessary to accomplish a purpose of the agency required by statute or by executive order of the President. The application of this provision could impair investigations and law enforcement, because it is not always possible to detect the relevance or necessity of specific information in the early stages of an investigation. Relevance and necessity are often questions of judgment and timing, and it is only after the information is evaluated that the relevance and necessity of such information can be established. In addition, during the course of the investigation, the investigator may obtain information which is incidental to the main purpose of the investigation but which may relate to matters under the investigative jurisdiction of another agency. Such information cannot readily be segregated. Furthermore, during the course of the investigation, the investigator may obtain information concerning the violation of laws other than those which are within the scope of his jurisdiction. In the interest of effective law enforcement, the EPA investigators should retain this information, since it can aid in establishing patterns of criminal activity and can provide valuable leads for other law enforcement agencies.

(5) 5 U.S.C. 552a(e)(2) requires an agency to collect information to the greatest extent practicable directly from the subject individual when the information may result in adverse determinations about an individual's rights, benefits, and privileges under Federal programs. The application of this provision could impair investigations and law enforcement by alerting the subject of an investigation of the existence of the investigation, enabling the subject to avoid detection or apprehension, to influence witnesses improperly, to destroy evidence, or to fabricate testimony. Moreover, in certain circumstances the subject of an investigation cannot be required to provide information to investigators, and information must be collected from other sources. Furthermore, it is often necessary to collect information from sources other than the subject of the investigation to verify the accuracy of the evidence collected.

(6) 5 U.S.C. 552a(e)(3) requires an agency to inform each person whom it asks to supply information, on a form that can be retained by the person, of the authority under which the information is sought and whether disclosure is mandatory or voluntary; of the principal purposes for which the information is intended to be used; of the routine uses which may be made of the information; and of the effects on the person, if any, of not providing all or any part of the requested information. The application of this provision could provide the subject of an investigation with substantial information about the nature of that investigation, which could interfere with the investigation. Moreover, providing such a notice to the subject of an investigation could seriously impede or compromise on undercover investigation by revealing its existence and could endanger the physical safety of confidential sources, witnesses, and investigators by revealing their identities.

(7) 5 U.S.C. 552a(e)(4)(G) and (H) require an agency to publish a FEDERAL REGISTER notice concerning its procedures for notifying an individual at his request if the system of records contains a record pertaining to him, how he can gain access to such a record, and how he can contest its content. Since EPA is claiming that these systems of records are exempt from subsection (f) of the Act, concerning agency rules, and subsection (d) of the Act, concerning access to records, these requirements are inapplicable and are exempted to the extent that these systems of records are exempted from subsections (f) and (d) of the Act. Although EPA is claiming exemption

from these requirements, EPA has published such a notice concerning its notification, access, and contest procedures because, under certain circumstances, EPA might decide it is appropriate for an individual to have access to all or a portion of his records in these systems of records.

(8) 5 U.S.C. 552a(e)(4)(I) requires an agency to publish a FEDERAL REGISTER notice concerning the categories of sources of records in the system of records. Exemption from this provision is necessary to protect the confidentiality of the sources of information, to protect the privacy and physical safety of confidential sources and witnesses, and to avoid the disclosure of investigative techniques and procedures. Although EPA is claiming exemption from this requirement, EPA has published such a notice in broad generic terms in the belief that this is all subsection (e)(4)(I) of the Act requires.

(9) 5 U.S.C. 552a(e)(5) requires an agency to maintain its records with such accuracy, relevance, timeliness, and completeness as is reasonably necessary to assure fairness to the individual in making any determination about the individual. Since the Act defines *maintain* to include the collection of information, complying with this provision would prevent the collection of any data not shown to be accurate, relevant, timely, and complete at the moment it is collected. In collecting information for criminal law enforcement purposes, it is not possible to determine in advance what information is accurate, relevant, timely, and complete. Facts are first gathered and then placed into a logical order to prove or disprove objectively the criminal behavior of an individual. Material which may seem unrelated, irrelevant, or incomplete when collected may take on added meaning or significance as the investigation progresses. The restrictions of this provision could interfere with the preparation of a complete investigative report, thereby impeding effective law enforcement.

(10) 5 U.S.C. 552a(e)(8) requires an agency to make reasonable efforts to serve notice on an individual when any record on such individual is made available to any person under compulsory legal process when such process becomes a matter of public record. Complying with this provision could prematurely reveal an ongoing criminal investigation to the subject of the investigation.

(11) 5 U.S.C. 552a(f)(1) requires an agency to promulgate rules which shall establish procedures whereby on an individual can be notified in response to his request if any system of records named by the individual contains a record pertaining to him. The application of this provision could impede or compromise an investigation or prosecution if the subject of an investigation was able to use such rules to learn of the existence of an investigation before it could be completed. In addition, mere notice of the fact of an investigation could inform the subject or others that their activities are under or may become the subject of an investigation and could enable the subjects to avoid detection or apprehension, to influence witnesses improperly, to destroy evidence, or to fabricate testimony. Since EPA is claiming that these systems of records are exempt from subsection (d) of the Act, concerning access to records, the requirements of subsections (f)(2) through (5) of the Act, concerning agency rules for obtaining access to such records, are inapplicable and are exempted to the extent that these systems of records are exempted from subsection (d) of the Act. Although EPA is claiming exemption from the requirements of subsection (f) of the Act, EPA has promulgated rules which establish Agency procedures because, under certain circumstances, it might be appropriate for an individual to have access to all or a portion of his records in these systems of records. These procedures are described elsewhere in this part.

(12) 5 U.S.C. 552a(g) provides for civil remedies if an agency fails to comply with the requirements concerning access to records under subsections (d)(1) and (3) of the Act; maintenance of records under subsection (e)(5) of the Act; and any other provision of the Act, or any rule promulgated thereunder, in such a way as to have an adverse effect on an individual. Since EPA is claiming that these systems of records are exempt from subsections (c)(3) and (4), (d), (e)(1), (2), (3), (4)(G),

(H), and (I), (5), and (8), and (f) of the Act, the provisions of subsection (g) of the Act are inapplicable and are exempted to the extent that these systems of records are exempted from those subsections of the Act.

(e) *Exempt records provided by another agency.* Individuals may not have access to records maintained by the EPA if such records were provided by another agency which has determined by regulation that such records are subject to general exemption under 5 U.S.C. 552a(j). If an individual requests access to such exempt records, EPA will consult with the source agency.

(f) *Exempt records included in a nonexempt system of records.* All records obtained from a system of records which has been determined by regulation to be subject to general exemption under 5 U.S.C. 552a(j) retain their exempt status even if such records are also included in a system of records for which a general exemption has not been claimed.

[51 FR 24146, July 2, 1986]

§ 16.14 Specific exemptions.

(a) *Exemptions under 5 U.S.C. 552a(k)(2)*—(1) *Systems of records affected.*

¶EPA–2 General Personnel Records—EPA.
¶EPA–4 OIG Criminal Investigative Index and Files—EPA/OIG.
¶EPA–5 OIG Personnel Security Files—EPA/OIG.
¶EPA–17 NEIC Criminal Investigative Index and Files— EPA/NEIC/OCI.
¶EPA–30 OIG Hotline Allegation System—EPA/OIG.

(2) *Authority.* Under 5 U.S.C. 552a(k)(2), the head of any agency may by rule exempt any system of records within the agency from certain provisions of the Privacy Act of 1974, if the system of records is investigatory material compiled for law enforcement purposes, other than material within the scope of subsection (j)(2).

(3) *Scope of exemption.* (i) The systems of records identified in §16.14(a)(1) are exempted from the following provisions of the Privacy Act of 1974, subject to the limitations set forth in 5 U.S.C. 552a(k)(2): 5 U.S.C. 552a (c)(3); (d); (e)(1), (4)(G), (H), and (I); and (f).

(ii) An individual is *denied any right, privilege, or benefit that he would otherwise be entitled by Federal law, or for which he would otherwise be eligible, as a result of the maintenance of such material,* only if the Agency actually uses the material in denying or proposing to deny such right, privilege, or benefit.

(iii) To the extent that records contained in the systems of records identified in §16.14(a)(1) are maintained by the Office of Investigations of the OIG or by the Office of Criminal Investigations of the NEIC, components of EPA which perform as their principal function activities pertaining to the enforcement of criminal laws, then an exemption under 5 U.S.C. 552a(j)(2) is claimed for these records.

(4) *Reasons for exemption.* The systems of records identified in §16.14(a)(1) are exempted from the above provisions of the Privacy Act of 1974 for the following reasons:

(i) 5 U.S.C. 552a(c)(3) requires an agency to make the accounting of each disclosure of records available to the individual named in the record at his request. These accountings must state the date, nature, and purpose of each disclosure of a record and the name and address of the recipient. Accounting for each disclosure would alert the subjects of an investigation to the existence of the investigation and the fact that they are subjects of the investigation. The release of such information to the subjects of an investigation would provide them with significant information concerning the nature of the investigation, and could seriously impede or compromise the investigation, endanger the physical safety of confidential sources, witnesses, law enforcement personnel and their families, and lead to the improper influencing of witnesses, the destruction of evidence, or the fabrication of testimony.

(ii) 5 U.S.C. 552a(d) requires an agency to permit an individual to gain access to records pertaining to him, to request amendment to such records, to request a review of an agency decision not to amend such records, and to contest the information contained in such records. Granting access to records in these systems of records could inform the subject of an investigation of an actual or potential criminal violation of the existence of that investigation,

of the nature and scope of the information and evidence obtained as to his activities, of the identity of confidential sources, witnesses, and law enforcement personnel, and could provide information to enable the subject to avoid detection or apprehension. Granting access to such information could seriously impede or compromise an investigation, endanger the physical safety of confidential sources, witnesses, law enforcement personnel and their families, lead to the improper influencing of witnesses, the destruction of evidence, or the fabrication of testimony, and disclose investigative techniques and procedures. In addition, granting access to such information could disclose classified, security-sensitive, or confidential business information and could constitute an unwarranted invasion of the personal privacy of others.

(iii) 5 U.S.C. 552a(e)(1) requires each agency to maintain in its records only such information about an individual as is relevant and necessary to accomplish a purpose of the agency required by statute or by executive order of the President. The application of this provision could impair investigations and law enforcement, because it is not always possible to detect the relevance or necessity of specific information in the early stages of an investigation. Relevance and necessity are often questions of judgment and timing, and it is only after the information is evaluated that the relevance and necessity of such information can be established. In addition, during the course of the investigation, the investigator may obtain information which is incidental to the main purpose of the investigation but which may relate to matters under the investigative jurisdiction of another agency. Such information cannot readily be segregated. Furthermore, during the course of the investigation, the investigator may obtain information concerning the violation of laws other than those which are within the scope of his jurisdiction. In the interest of effective law enforcement, EPA investigators should retain this information, since it can aid in establishing patterns of criminal activity and can provide valuable leads for other law enforcement agencies.

(iv) 5 U.S.C. 552a(e)(4)(G) and (H) require an agency to publish a FEDERAL REGISTER notice concerning its procedures for notifying an individual at his request if the system of records contains a record pertaining to him, how he can gain access to such a record, and how he can contest its content. Since EPA is claiming that these systems of records are exempt from subsection (f) of the Act, concerning agency rules, and subsection (d) of the Act, concerning access to records, these requirements are inapplicable and are exempted to the extent that these systems of records are exempted from subsections (f) and (d) of the Act. Although EPA is claiming exemption from these requirements, EPA has published such a notice concerning its notification, access, and contest procedures because, under certain circumstances, EPA might decide it is appropriate for an individual to have access to all or a portion of his records in these systems of records.

(v) 5 U.S.C. 552a(e)(4)(I) requires an agency to publish a FEDERAL REGISTER notice concerning the categories of sources of records in the system of records. Exemption from this provision is necessary to protect the confidentiality of the sources of information, to protect the privacy and physical safety of confidential sources and witnesses, and to avoid the disclosure of investigative techniques and procedures. Although EPA is claiming exemption from this requirement, EPA has published such a notice in broad generic terms in the belief that this is all subsection (e)(4)(I) of the Act requires.

(vi) 5 U.S.C. 552a(f)(1) requires an agency to promulgate rules which shall establish procedures whereby an individual can be notified in response to his request if any system of records named by the individual contains a record pertaining to him. The application of this provision could impede or compromise an investigation or prosecution if the subject of an investigation was able to use such rules to learn of the existence of an investigation before it could be completed. In addition, mere notice of the fact of an investigation could inform the subject or others that their activities are under or may become the subject of an investigation

and could enable the subjects to avoid detection or apprehension, to influence witnesses improperly, to destroy evidence, or to fabricate testimony. Since EPA is claiming that these systems of records are exempt from subsection (d) of the Act, concerning access to records, the requirements of subsections (f)(2) through (5) of the Act, concerning agency rules for obtaining access to such records, are inapplicable and are exempted to the extent that these systems of records are exempted from subsection (d) of the Act. Although EPA is claiming exemption from the requirements of subsection (f), EPA has promulgated rules which establish Agency procedures because, under certain circumstances, it might be appropriate for an individual to have access to all or a portion of his records in these systems of records. These procedures are described elsewhere in this part.

(b) *Exemption under 5 U.S.C. 552a(k)(5)*—(1) *Systems of records affected.*

¶EPA–2 General Personnel Records—EPA.
¶EPA–4 OIG Criminal Investigative Index and Files—EPA/OIG.
¶EPA–5 OIG Personnel Security Files—EPA/OIG.

(2) *Authority.* Under 5 U.S.C. 552a(k)(5), the head of any agency may by rule exempt any system of records within the agency from certain provisions of the Privacy Act of 1974, if the system of records is investigatory material compiled solely for the purpose of determining suitability, eligibility, or qualifications for Federal civilian employment, Federal contracts, or access to classified information, but only to the extent that the disclosure of such material would reveal the identity of a source who furnished information to the Government under an express promise that the identity of the source would be held in confidence, or, prior to September 27, 1975, under an implied promise that the identity would be held in confidence.

(3) *Scope of exemption.* (i) The systems of records identified in § 16.14(b)(1) are exempted from the following provisions of the Privacy Act of 1974, subject to the limitations of 5 U.S.C. 552a(k)(5): 5 U.S.C. 552a (c)(3); (d); (e)(1), (4)(H) and (I); and (f)(2) through (5).

(ii) To the extent that records contained in the systems of records identified in § 16.14(b)(1) reveal a violation or potential violation of law, then an exemption under 5 U.S.C. 552a(k)(2) is also claimed for these records.

(4) *Reasons for exemption.* The systems of records identified in § 16.14(b)(1) are exempted from the above provisions of the Privacy Act of 1974 for the following reasons:

(i) 5 U.S.C. 552a(c)(3) requires an agency to make the accounting of each disclosure of records available to the individual named in the record at his request. These accountings must state the date, nature, and purpose of each disclosure of a record and the name and address of the recipient. Making such an accounting could cause the identity of a confidential source to be revealed, endangering the physical safety of the confidential source, and could impair the future ability of the EPA to compile investigatory material for the purpose of determining suitability, eligibility, or qualifications for Federal civilian employment, Federal contracts, or access to classified information.

(ii) 5 U.S.C. 552a(d) requires an agency to permit an individual to gain access to records pertaining to him, to request amendment to such records, to request a review of an agency decision not to amend such records, and to contest the information contained in such records. Granting such access could cause the identity of a confidential source to be revealed, endangering the physical safety of the confidential source, and could impair the future ability of the EPA to compile investigatory material for the purpose of determining suitability, eligibility, or qualifications for Federal civilian employment, Federal contracts, or access to classified information.

(iii) 5 U.S.C. 552a(e)(1) requires each agency to maintain in its records only such information about an individual as is relevant and necessary to accomplish a purpose of the agency required by statute or by executive order of the President. The application of this provision could impair investigations, because it is not always possible to detect the relevance or necessity of specific information in the early stages of

an investigation. Relevance and necessity are often questions of judgment and timing, and it is only after the information is evaluated that the relevance and necessity of such information can be established.

(iv) 5 U.S.C. 552a(e)(4)(H) requires an agency to publish a FEDERAL REGISTER notice concerning its procedures for notifying an individual at his request how he can gain access to any record pertaining to him and how he can contest its content. Since EPA is claiming that these systems of records are exempt from subsections (f)(2) through (5) of the Act, concerning agency rules, and subsection (b) of the Act, concerning access to records, these requirements are inapplicable and are exempted to the extent that these systems of records are exempted from subsections (f)(2) through (5) and (d) of the Act. Although EPA is claiming exemption from these requirements, EPA has published such a notice concerning its access and contest procedures because, under certain circumstances, EPA might decide it is appropriate for an individual to have access to all or a portion of his records in these systems of records.

(v) 5 U.S.C. 552a(e)(4)(I) requires an agency to publish a FEDERAL REGISTER notice concerning the categories of sources of records in the system of records. Exemption from this provision is necessary to protect the confidentiality of the sources of information, to protect the privacy and physical safety of confidential sources, and to avoid the disclosure of investigative techniques and procedures. Although EPA is claiming exemption from this requirement, EPA has published such a notice in broad generic terms in the belief that this is all subsection (e)(4)(I) of the Act requires.

(vi) 5 U.S.C. 552a(f)(2) through (5) require an agency to promulgate rules for obtaining access to records. Since EPA is claiming that these systems of records are exempt from subsection (d) of the Act, concerning access to records, the requirements of subsections (f)(2) through (5) of the Act, concerning agency rules for obtaining access to such records, are inapplicable and are exempted to the extent that this system of records is exempted from subsection (d) of the Act. Although EPA is claiming exemption from the requirements of subsections (f)(2) through (5) of the Act, EPA has promulgated rules which establish Agency procedures because, under certain circumstances, it might be appropriate for an individual to have access to all or a portion of his records in this system of records. These procedures are described elsewhere in this part.

(c) *Exemption under 5 U.S.C. 552a(k)(1)*—(1) *System of records affected.*

¶EPA–5 OIG Personnel Security Files—EPA/OIG.

(2) *Authority.* Under 5 U.S.C. 552a(k)(1), the head of any agency may by rule exempt any system of records within the agency from certain provisions of the Privacy Act of 1974, if the system of records is subject to the provisions of 5 U.S.C. 552(b)(1). A system of records is subject to the provisions of 5 U.S.C. 552(b)(1) if it contains records that are specifically authorized under criteria established by an Executive order to be kept secret in the interest of national defense or foreign policy and are in fact properly classified pursuant to such Executive order. Executive Order 12356 establishes criteria for classifying records which are to be kept secret in the interest of national defense or foreign policy.

(3) *Scope of exemption.* To the extent that the system of records identified in § 16.14(c)(1) contains records provided by other Federal agencies that are specifically authorized under criteria established by Executive Order 12356 to be kept secret in the interest of national defense or foreign policy and are in fact properly classified by other Federal agencies pursuant to that Executive order, the system of records is exempted from the following provisions of the Privacy Act of 1974: 5 U.S.C. 552a (c)(3); (d); (e)(1), (4)(G), (H), and (I); and (f).

(4) *Reasons for exemption.* The system of records identified in § 16.14(c)(1) is exempted from the above provisions of the Privacy Act of 1974 for the following reasons:

(i) 5 U.S.C. 552a(c)(3) requires an agency to make the accounting of each disclosure of records available to the individual named in the record at his

request. These accountings must state the date, nature, and purpose of each disclosure of a record and the name and address of the recipient. Making such an accounting could result in the release of properly classified information, which would compromise the national defense or disrupt foreign policy.

(ii) 5 U.S.C. 552a(d) requires an agency to permit an individual to gain access to records pertaining to him, to request amendment to such records, to request a review of an agency decision not to amend such records, and to contest the information contained in such records. Granting such access could cause the release of properly classified information, which would compromise the national defense or disrupt foreign policy.

(iii) 5 U.S.C. 552a(e)(1) requires each agency to maintain in its records only such information about an individual as is relevant and necessary to accomplish a purpose of the agency required by statute or by executive order of the President. The application of this provision could impair personnel security investigations which use properly classified information, because it is not always possible to know the relevance or necessity of specific information in the early stages of an investigation. Relevance and necessity are often questions of judgment and timing, and it is only after the information is evaluated that the relevance and necessity of such information can be established.

(iv) 5 U.S.C. 552a(e)(4)(G) and (H) require an agency to publish a FEDERAL REGISTER notice concerning its procedures for notifying an individual at his request if the system of records contains a record pertaining to him, how he can gain access to such a record, and how he can contest its content. Since EPA is claiming that this system of records is exempt from subsection (f) of the Act, concerning agency rules, and subsection (d) of the Act, concerning access to records, these requirements are inapplicable and are exempted to the extent that this system of records is exempted from subsections (f) and (d) of the Act. Although EPA is claiming exemption from these requirements, EPA has published such a notice concerning its notification, access, and contest procedures because, under certain circumstances, EPA might decide it is appropriate for an individual to have access to all or a portion of his records in this system of records.

(v) 5 U.S.C. 552a(e)(4)(I) requires an agency to publish a FEDERAL REGISTER notice concerning the categories of sources of records in the system of records. Exemption from this provision is necessary to prevent the release of properly classified information, which would compromise the national defense or disrupt foreign policy. Although EPA is claiming exemption from this requirement, EPA has published such a notice in broad generic terms in the belief that this is all subsection (e)(4)(I) of the Act requires.

(vi) 5 U.S.C. 552(a)(f)(1) requires an agency to promulgate rules which shall establish procedures whereby an individual can be notified in response to his request if any system of records named by the individual contains a record pertaining to him. The application of this provision could result in the release of properly classified information, which would compromise the national defense or disrupt foreign policy. Since EPA is claiming that this system of records is exempt from subsection (d) of the Act, concerning access to records, the requirements of subsections (f)(2) through (5) of the Act, concerning agency rules for obtaining access to such records, are inapplicable and are exempted to the extent that this system of records is exempted from subsection (d) of the Act. Although EPA is claiming exemption from the requirements of subsection (f) of the Act, EPA has promulgated rules which establish Agency procedures because, under certain circumstances, it might be appropriate for an individual to have access to all or a portion of his records in this system of records. These procedures are described elsewhere in this part.

(d) *Exempt records provided by another agency.* Individuals may not have access to records maintained by the EPA if such records were provided by another agency which has determined by regulation that such records are subject to general exemption under 5 U.S.C. 552a(j) or specific exemption under 5 U.S.C. 552a(k). If an individual

requests access to such exempt records, EPA will consult with the source agency.

(e) *Exempt records included in a nonexempt system of records.* All records obtained from a system of records which has been determined by regulation to be subject to specific exemption under 5 U.S.C. 552a(k) retain their exempt status even if such records are also included in a system of records for which a specific exemption has not been claimed.

[51 FR 24147, July 2, 1986, as amended at 59 FR 17485, Apr. 13, 1994]

PART 17—IMPLEMENTATION OF THE EQUAL ACCESS TO JUSTICE ACT IN EPA ADMINISTRATIVE PROCEEDINGS

Subpart A—General Provisions

Sec.
17.1 Purpose of these rules.
17.2 Definitions.
17.3 Proceedings covered.
17.4 Applicability to EPA proceedings.
17.5 Eligibility of applicants.
17.6 Standards for awards.
17.7 Allowable fees and other expenses.
17.8 Delegation of authority.

Subpart B—Information Required From Applicants

17.11 Contents of application.
17.12 Net worth exhibit.
17.13 Documentation of fees and expenses.
17.14 Time for submission of application.

Subpart C—Procedures for Considering Applications

17.21 Filing and service of documents.
17.22 Answer to application.
17.23 Comments by other parties.
17.24 Settlement.
17.25 Extensions of time and further proceedings.
17.26 Decision on application.
17.27 Agency review.
17.28 Judicial review.
17.29 Payment of award.

AUTHORITY: Section 504, Title 5 U.S.C., as amended by sec. 203(a)(1), Equal Access to Justice Act (Title 2 of Pub. L. 96–481, 94 Stat. 2323).

SOURCE: 48 FR 39936, Sept. 2, 1983, unless otherwise noted.

Subpart A—General Provisions

§17.1 Purpose of these rules.

These rules are adopted by EPA pursuant to section 504 of title 5 U.S.C., as added by section 203(a)(1) of the Equal Access to Justice Act, Public Law No. 96–481. Under the Act, an eligible party may receive an award for attorney's fees and other expenses when it prevails over EPA in an adversary adjudication before EPA unless EPA's position as a party to the proceeding was substantially justified or special circumstances make an award unjust. The purpose of these rules is to establish procedures for the submission and consideration of applications for awards against EPA when the underlying decision is not reviewed by a court.

§17.2 Definitions.

As used in this part:

(a) *The Act* means section 504 of title 5 U.S.C., as amended by section 203(a)(1) of the Equal Access to Justice Act, Public Law No. 96–481.

(b) *Administrator* means the Administrator of the Environmental Protection Agency.

(c) *Adversary adjudication* means an adjudication required by statute to be held pursuant to 5 U.S.C. 554 in which the position of the United States is represented by counsel or otherwise, but excludes an adjudication for the purpose of granting or renewing a license.

(d) *EPA* means the Environmental Protection Agency, an Agency of the United States.

(e) *Presiding officer* means the official, without regard to whether he is designated as an administrative law judge or a hearing officer or examiner, who presides at the adversary adjudication.

(f) *Proceeding* means an adversary adjudication as defined in §17.2(b).

§17.3 Proceedings covered.

(a) These rules apply to adversary adjudications required by statute to be conducted by EPA under 5 U.S.C. 554. To the extent that they are adversary adjudications, the proceedings conducted by EPA to which these rules apply include:

(1) A hearing to consider the assessment of a noncompliance penalty under

section 120 of the Clean Air Act as amended (42 U.S.C. 7420);

(2) A hearing to consider the termination of an individual National Pollution Discharge Elimination System permit under section 402 of the Clean Water Act as amended (33 U.S.C. 1342);

(3) A hearing to consider the assessment of any civil penalty under section 16(a) of the Toxic Substances Control Act (15 U.S.C. 2615(a));

(4) A hearing to consider ordering a manufacturer of hazardous chemical substances or mixtures to take actions under section 6(b) of the Toxic Substances Control Act (15 U.S.C. 2605(b)), to decrease the unreasonable risk posed by a chemical substance or mixture;

(5) A hearing to consider the assessment of any civil penalty under section 14(a) of the Federal Insecticide, Fungicide, and Rodenticide Act as amended (7 U.S.C. 1361);

(6) A hearing to consider suspension of a registrant for failure to take appropriate steps in the development of registration data under section 3(c)(2)(B) of the Federal Insecticide, Fungicide and Rodenticide Act as amended (7 U.S.C. 136a);

(7) A hearing to consider the suspension or cancellation of a registration under section 6 of the Federal Insecticide, Fungicide, and Rodenticide Act as amended (7 U.S.C. 136d);

(8) A hearing to consider the assessment of any civil penalty or the revocation or suspension of any permit under section 105(a) or 105(f) of the Marine Protection, Research, and Sanctuaries Act as amended (33 U.S.C. 1415(a), 33 U.S.C. 1415(f));

(9) A hearing to consider the issuance of a compliance order or the assessment of any civil penalty conducted under section 3008 of the Resource Conservation and Recovery Act as amended (42 U.S.C. 6928);

(10) A hearing to consider the issuance of a compliance order under section 11(d) of the Noise Control Act as amended (42 U.S.C. 4910(d)).

(b) If a proceeding includes both matters covered by the Act and matters specifically excluded from coverage, any award made will include only fees and expenses related to covered issues.

§ 17.4 Applicability to EPA proceedings.

The Act applies to an adversary adjudication pending before EPA at any time between October 1, 1981 and September 30, 1984. This includes proceedings begun before October 1, 1981 if final EPA action has not been taken before that date, and proceedings pending on September 30, 1984.

§ 17.5 Eligibility of applicants.

(a) To be eligible for an award of attorney's fees and other expenses under the Act, the applicant must be a prevailing party in the adversary adjudication for which it seeks an award. The term *party* is defined in 5 U.S.C. 551(3). The applicant must show that it meets all conditions of eligibility set out in this subpart and in subpart B.

(b) The types of eligible applicants are as follows:

(1) An individual with a net worth of not more than $1 million;

(2) The sole owner of an unincorporated business which has a net worth of not more than $5 million and not more than 500 employees;

(3) A charitable or other tax-exempt organization described in section 501(c)(3) of the Internal Revenue Code (26 U.S.C. 501(c)(3)) with not more than 500 employees;

(4) A cooperative association as defined in section 15(a) of the Agricultural Marketing Act (12 U.S.C. 114j(a)) with not more than 500 employees; and

(5) Any other partnership, corporation, association, or public or private organization with a net worth of not more than $5 million and not more than 500 employees.

(c) For the purpose of eligibility, the net worth and number of employees of an applicant shall be determined as of the date of adversary adjudication was initiated.

(d) An applicant who owns an unincorporated business will be considered as an *individual* rather than a *sole owner of an unincorporated business* if the issues on which the applicant prevails are related primarily to personal interests rather than to business interest.

(e) The employees of an applicant include all persons who regularly perform services for remuneration for the

applicant under the applicant's direction and control. Part-time employees shall be included.

(f) The net worth and number of employees of the applicant and all of its affiliates shall be aggregated to determine eligibility. An individual or group of individuals, corporation, or other entity that directly or indirectly controls or owns a majority of the voting shares of another business' board of directors, trustees, or other persons exercising similar functions, shall be considered an affiliate of that business for purposes of this part. In addition, the Presiding Officer may determine that financial relationships of the applicant other than those described in this paragraph constitute special circumstances that would make an award unjust.

(g) An applicant is not eligible if it has participated in the proceeding on behalf of other persons or entities that are ineligible.

§17.6 Standards for awards.

(a) A prevailing applicant may receive an award for fees and expenses incurred in connection with a proceeding unless the position of the EPA as a party to the proceeding was substantially justified or unless special circumstances make the award sought unjust. No presumption arises that the agency's position was not substantially justified simply because the agency did not prevail.

(b) An award shall be reduced or denied if the applicant has unduly or unreasonably protracted the proceeding.

§17.7 Allowable fees and other expenses.

(a) The following fees and other expenses are allowable under the Act:

(1) Reasonable expenses of expert witnesses;

(2) The reasonable cost of any study, analysis, engineering report, test, or project which EPA finds necessary for the preparation of the party's case;

(3) Reasonable attorney or agent fees;

(b) The amount of fees awarded will be based upon the prevailing market rates for the kind and quality of services furnished, except that:

(1) Compensation for an expert witness will not exceed $24.09 per hour; and

(2) Attorney or agent fees will not be in excess of $75 per hour.

(c) In determining the reasonableness of the fee sought, the Presiding Officer shall consider the following:

(1) The prevailing rate for similar services in the community in which the attorney, agent, or witness ordinarily performs services;

(2) The time actually spent in the representation of the applicant;

(3) The difficulty or complexity of the issues raised by the application;

(4) Any necessary and reasonable expenses incurred;

(5) Such other factors as may bear on the value of the services performed.

§17.8 Delegation of authority.

The Administrator delegates to the Environmental Appeals Board authority to take final action relating to the Equal Access to Justice Act. The Environmental Appeals Board is described at 40 CFR 1.25(e). This delegation does not preclude the Environmental Appeals Board from referring any matter related to the Equal Access to Justice Act to the Administrator when the Environmental Appeals Board deems it appropriate to do so. When an appeal or motion is referred to the Administrator by the Environmental Appeals Board, all parties shall be so notified and the rules in this part referring to the Environmental Appeals Board shall be interpreted as referring to the Administrator.

[57 FR 5323, Feb 13, 1992]

Subpart B—Information Required From Applicants

§17.11 Contents of application.

(a) An application for award of fees and expenses under the Act shall identify the applicant and the proceeding for which an award is sought. The application shall show that the applicant has prevailed and identify the position of EPA in the proceeding that the applicant alleges was not substantially justified.

(b) The application shall include a statement that the applicant's net worth as of the time the proceeding was initiated did not exceed $1 million if the applicant is an individual (other

than a sole owner of an unincorporated business seeking an award in that capacity) or $5 million in the case of all other applicants. An applicant may omit this statement if:

(1) It attaches a copy of a ruling by the Internal Revenue Service that it qualifies as an organization described in section 501(c)(3) of the Internal Revenue Code of 1954 (26 U.S.C. 501(c)(3)) and is exempt from taxation under section 501(a) of the Code or, in the case of such an organization not required to obtain a ruling from the Internal Revenue Service on its exempt status, a statement that describes the basis for the applicant's belief that it qualifies under section 501(c)(3) of the Code; or

(2) It states that it is a cooperative association as defined in section 15(a) of the Agricultural Marketing Act (12 U.S.C. 114j(a)).

(c) If the applicant is a partnership, corporation, association, or organization, or a sole owner of an unincorporated business, the application shall state that the applicant did not have more than 500 employees at the time the proceeding was initiated, giving the number of its employees and describing briefly the type and purpose of its organization or business.

(d) The application shall itemize the amount of fees and expenses sought.

(e) The application may include any other matters that the applicant believes should be considered in determining whether and in what amount an award should be made.

(f) The application shall be signed by the applicant with respect to the eligibility of the applicant and by the attorney of the applicant with respect to fees and expenses sought. The application shall contain or be accompanied by a written verification under oath or affirmation or under penalty of perjury that the information provided in the application and all accompanying material is true and complete to the best of the signer's information and belief.

(Approved by the Office of Management and Budget under control number 2000–0403)

§ 17.12 Net worth exhibit.

(a) Each applicant except a qualified tax exempt organization or a qualified cooperative must submit with its application a detailed exhibit showing its net worth at the time the proceeding was initiated. If any individual, corporation, or other entity directly or indirectly controls or owns a majority of the voting shares or other interest of the applicant, or if the applicant directly or indirectly owns or controls a majority of the voting shares or other interest of any corporation or other entity, the exhibit must include a showing of the net worth of all such affiliates or of the applicant including the affiliates. The exhibit may be in any form that provides full disclosure of assets and liabilities of the applicant and any affiliates and is sufficient to determine whether the applicant qualifies under the standards of 5 U.S.C. 504(b)(1)(B)(i). The Presiding Officer may require an applicant to file additional information to determine the applicant's eligibility for an award.

(b) The net worth exhibit shall describe any transfers of assets from, or obligations incurred by, the applicant or any affiliate occurring in the one-year period prior to the date on which the proceeding was initiated that reduced the net worth of the applicant and its affiliates below the applicable net worth ceiling. If there were no such transactions, the applicant shall so state.

(c) The net worth exhibit shall be included in the public record of the proceeding.

(Approved by the Office of Management and Budget under control number 2000–0430)

§ 17.13 Documentation of fees and expenses.

(a) The application shall be accompanied by full documentation of fees and expenses, including the cost of any study, engineering report, test, or project, for which an award is sought.

(b) The documentation shall include an affidavit from any attorney, agent, or expert witness representing or appearing in behalf of the party stating the actual time expended and the rate at which fees and other expenses were computed and describing the specific services performed.

(1) The affidavit shall itemize in detail the services performed by the date, number of hours per date, and the services performed during those hours. In order to establish the hourly rate, the

affidavit shall state the hourly rate which is billed and paid by the majority of clients during the relevant time periods.

(2) If no hourly rate is paid by the majority of clients because, for instance, the attorney or agent represents most clients on a contingency basis, the attorney or agent shall provide affidavits from two attorneys or agents with similar experience, who perform similar work, stating the hourly rate which they bill and are paid by the majority of their clients during a comparable time period.

(c) The documentation shall also include a description of any expenses for which reimbursement is sought and a statement of the amounts paid and payable by the applicant or by any other person or entity for the services provided.

(d) The Presiding Officer may require the applicant to provide vouchers, receipts, or other substantiation for any expenses claimed.

(Approved by the Office of Management and Budget under control number 2000–0430)

§17.14 Time for submission of application.

(a) An application must be filed no later than 30 days after final disposition of the proceeding. If agency review or reconsideration is sought or taken of a decision in which an applicant believes it has prevailed, action on the award of fees shall be stayed pending final agency disposition of the underlying controversy.

(b) Final disposition means the later of: (1) The date on which the Agency decision becomes final, either through disposition by the Environmental Appeals Board of a pending appeal or through an initial decision becoming final due to lack of an appeal or (2) the date of final resolution of the proceeding, such as settlement or voluntary dismissal, which is not subject to a petition for rehearing or reconsideration.

(c) If judicial review is sought or taken of the final agency disposition of the underlying controversy, then agency proceedings for the award of fees will be stayed pending completion of judicial review. If, upon completion of review, the court decides what fees to award, if any, then EPA shall have no authority to award fees.

[48 FR 39936, Sept. 2, 1983, as amended at 57 FR 5323, Feb. 13, 1992]

Subpart C—Procedures for Considering Applications

§17.21 Filing and service of documents.

An application for an award and any other pleading or document related to the application shall be filed and served on all parties to the proceeding in the same manner as other pleadings in the proceeding.

§17.22 Answer to application.

(a) Within 30 calendar days after service of the application, EPA counsel shall file an answer.

(b) If EPA counsel and the applicant believe that they can reach a settlement concerning the award, EPA counsel may file a statement of intent to negotiate. The filing of such a statement shall extend the time for filing an answer an additional 30 days.

(c) The answer shall explain in detail any objections to the award requested and identify the facts relied on to support the objection. If the answer is based on any alleged facts not already reflected in the record of the proceeding, EPA counsel shall include with the answer either a supporting affidavit or affidavits or request for further proceedings under §17.25.

§17.23 Comments by other parties.

Any party to a proceeding other than the applicant and EPA counsel may file comments on an application within 30 calendar days after it is served or on an answer within 15 calendar days after it is served.

§17.24 Settlement.

A prevailing party and EPA counsel may agree on a proposed settlement of an award before final action on the application, either in connection with a settlement of the underlying proceeding or after the underlying proceeding has been concluded. If the party and EPA counsel agree on a proposed settlement of an award before an application has been filed, the application

shall be filed with the proposed settlement.

§ 17.25 Extensions of time and further proceedings.

(a) The Presiding Officer may, on motion and for good cause shown, grant extensions of time, other than for filing an application for fees and expenses, after final disposition in the adversary adjudication.

(b) Ordinarily, the determination of an award will be made on the basis of the written record of the underlying proceeding and the filings required or permitted by the foregoing sections of these rules. However, the adjudicative officer may *sua sponte* or on motion of any party to the proceedings require or permit further filings or other action, such as an informal conference, oral argument, additional written submissions, or an evidentiary hearing. Such further action shall be allowed only when necessary for full and fair resolution of the issues arising from the application and shall take place as promptly as possible. A motion for further filings or other action shall specifically identify the information sought on the disputed issues and shall explain why the further filings or other action is necessary to resolve the issues.

(c) In the event that an evidentiary hearing is required or permitted by the adjudicative officer, such hearing and any related filings or other action required or permitted shall be conducted pursuant to the procedural rules governing the underlying adversary adjudication.

§ 17.26 Decision on application.

The Presiding Officer shall issue a recommended decision on the application which shall include proposed written findings and conclusions on such of the following as are relevant to the decision: (a) The applicant's status as a prevailing party; (b) the applicant's qualification as a ''party'' under 5 U.S.C. 504(b)(1)(B); (c) whether EPA's position as a party to the proceeding was substantially justified; (d) whether the special cirumstances make an award unjust; (e) whether the applicant during the course of the proceedings engaged in conduct that unduly and unreasonably protracted the final resolution of the matter in controversy; and (f) the amounts, if any, awarded for fees and other expenses, explaining any difference between the amount requested and the amount awarded.

§ 17.27 Agency review.

The recommended decision of the Presiding Officer will be reviewed by EPA in accordance with EPA's procedures for the type of substantive proceeding involved.

§ 17.28 Judicial review.

Judicial review of final EPA decisions on awards may be sought as provided in 5 U.S.C. 504(c)(2).

§ 17.29 Payment of award.

An applicant seeking payment of an award shall submit a copy of the final decision granting the award to the Office of Financial Management for Processing. A statement that review of the underlying decision is not being sought in the United States courts or that the process for seeking review of the award has been completed must also be included.

PART 20—CERTIFICATION OF FACILITIES

Sec.

20.1 Applicability.
20.2 Definitions.
20.3 General provisions.
20.4 Notice of intent to certify.
20.5 Applications.
20.6 State certification.
20.7 General policies.
20.8 Requirements for certification.
20.9 Cost recovery.
20.10 Revocation.

APPENDIX A TO PART 20—GUIDELINES FOR CERTIFICATION

AUTHORITY: Secs. 301, 704, 80 Stat. 379, 83 Stat. 667; 5 U.S.C. 301, 26 U.S.C. 169.

SOURCE: 36 FR 22382, Nov. 25, 1971, unless otherwise noted.

§ 20.1 Applicability.

The regulations of this part apply to certifications by the Administrator of water or air pollution control facilities for purposes of section 169 of the Internal Revenue Code of 1954, as amended,

26 U.S.C. 169, as to which the amortization period began after December 31, 1975. Certification of air or water pollution control facilities as to which the amortization period began before January 1, 1976, will continue to be governed by Environmental Protection Agency regulations published November 25, 1971, at 36 FR 22382. Applicable regulations of the Department of Treasury are at 26 CFR 1.169 *et seq.*

[43 FR 1340, Jan. 9, 1978]

§ 20.2 Definitions.

As used in this part, the following terms shall have the meaning indicated below:

(a) *Act* means, when used in connection with water pollution control facilities, the Federal Water Pollution Control Act, as amended (33 U.S.C. 1251 *et seq.*) or, when used in connection with air pollution control facilities, the Clean Air Act, as amended (42 U.S.C. 1857 *et seq.*).

(b) *State certifying authority* means:

(1) For water pollution control facilities, the State pollution control agency as defined in section 502 of the Act.

(2) For air pollution control facilities, the air pollution control agency designated pursuant to section 302(b)(1) of the Act; or

(3) For both air and water pollution control facilities, any interstate agency authorized to act in place of the certifying agency of a State.

(c) *Applicant* means any person who files an application with the Administrator for certification that a facility is in compliance with the applicable regulations of Federal agencies and in furtherance of the general policies of the United States for cooperation with the States in the prevention and abatement of water or air pollution under the Act.

(d) *Administrator* means the Administrator, Environmental Protection Agency.

(e) *Regional Administrator* means the Regional designee appointed by the Administrator to certify facilities under this part.

(f) *Facility* means property comprising any new identifiable treatment facility which removes, alters, disposes of, stores, or prevents the creation of pollutants, contaminants, wastes, or heat.

(g) *State* means the States, the District of Columbia, the Commonwealth of Puerto Rico, the Canal Zone, Guam, American Samoa, the Virgin Islands, and the Trust Territory of the Pacific Islands.

[36 FR 22382, Nov. 25, 1971, as amended at 43 FR 1340, Jan. 9, 1978]

§ 20.3 General provisions.

(a) An applicant shall file an application in accordance with this part for each separate facility for which certification is sought; *Provided,* That one application shall suffice in the case of substantially identical facilities which the applicant has installed or plans to install in connection with substantially identical properties; *Provided further,* That an application may incorporate by reference material contained in an application previously submitted by the applicant under this part and pertaining to substantially identical facilities.

(b) The applicant shall, at the time of application to the State certifying authority, submit an application in the form prescribed by the Administrator to the Regional Administrator for the region in which the facility is located.

(c) Applications will be considered complete and will be processed when the Regional Administrator receives the completed State certification.

(d) Applications may be filed prior or subsequent to the commencement of construction, acquisition, installation, or operation of the facility.

(e) An amendment to an application shall be submitted in the same manner as the original application and shall be considered a part of the original application.

(f) If the facility is certified by the Regional Administrator, notice of certification will be issued to the Secretary of the Treasury or his delegate, and a copy of the notice shall be forwarded to the applicant and to the State certifying authority. If the facility is denied certification, the Regional Administrator will advise the applicant and State certifying authority in writing of the reasons therefor.

(g) No certification will be made by the Regional Administrator for any facility prior to the time it is placed in operation and the application, or amended application, in connection with such facility so states.

(h) An applicant may appeal any decision of the Regional Administrator which:

(1) Denies certification;

(2) Disapproves the applicant's suggested method of allocating costs pursuant to § 20.8(e); or

(3) Revokes a certification pursuant to § 20.10.

Any such appeal may be taken by filing with the Administrator within 30 days from the date of the decision of the Regional Administrator a written statement of objections to the decision appealed from. Within 60 days after receipt of such appeal the Administrator shall affirm, modify, or revoke the decision of the Regional Administrator, stating in writing his reasons therefor.

[36 FR 22382, Nov. 25, 1971, as amended at 43 FR 1340, Jan. 9, 1978]

§ 20.4 Notice of intent to certify.

(a) On the basis of applications submitted prior to the construction, reconstruction, erection, acquisition, or operation of a facility, the Regional Administrator may notify applicants that such facility will be certified if:

(1) The Regional Administrator determines that such facility, if constructed, reconstructed, erected, acquired, installed, and operated in accordance with such application will be in compliance with requirements identified in § 20.8; and if

(2) The application is accompanied by a statement from the State certifying authority that such facility, if constructed, reconstructed, acquired, erected, installed, and operated in accordance with such application, will be in conformity with the State program or requirements for abatement or control of water or air pollution.

(b) Notice of actions taken under this section will be given to the appropriate State certifying authority.

§ 20.5 Applications.

Applications for certification under this part shall be submitted in such manner as the Administrator may prescribe, shall be signed by the applicant or agent thereof, and shall include the following information:

(a) Name, address, and Internal Revenue Service identifying number of the applicant;

(b) Type and narrative description of the new identifiable facility for which certification is (or will be) sought, including a copy of schematic or engineering drawings, and a description of the function and operation of such facility;

(c) Address (or proposed address) of facility location;

(d) A general description of the operation in connection with which the facility is (or will be) used and a description of the specific process or processes resulting in discharges or emissions which are (or will be) controlled or prevented by the facility.

(e) If the facility is (or will be) used in connection with more than one plant or other property, one or more of which were not in operation before January 1, 1976, a description of the operations of the facility in respect to each plant or other property, including a reasonable allocation of the costs of the facility among the plants being serviced, and a description of the reasoning and accounting method or methods used to arrive at these allocations.

(f) A description of the effect of the facility in terms of type and quantity of pollutants, contaminants, wastes, or heat, removed, altered, stored, disposed of, or prevented by the facility.

(g) If the facility performs a function other than removal, alteration, storage, prevention, or disposal of pollutants, contaminants, wastes, or heat, a description of all functions performed by the facility, including a reasonable identification of the costs of the facility allocable to removal, alteration, storage, prevention, or disposal of pollutants, contaminants, wastes, or heat and a description of the reasoning and accounting method or methods used to arrive at the allocation.

(h) Date when such construction, reconstruction, or erection will be completed or when such facility was (or will be) acquired;

(i) Date when such facility is placed (or is intended to be placed) in operation;

(j) Identification of the applicable State and local water or air pollution control requirements and standards, if any;

(k) Expected useful life of facility;

(l) Cost of construction, acquisition, installation, operation, and maintenance of the facility;

(m) Estimated profits reasonably expected to be derived through the recovery of wastes or otherwise in the operation of the facility over the period referred to in paragraph (a)(6) of 26 CFR 1.169–2;

(n) The percentage (if any, and if the taxpayer claims that the percentage is 5 percent or less) by which the facility (1) increases the output or capacity, (2) extends the useful life, or (3) reduces the total operating costs of the operating unit of the plant or other property most directly associated with the pollution control facility and a description of the reasoning and accounting method or methods used to arrive at this percentage.

(o) Such other information as the Administrator deems necessary for certification.

[36 FR 22382, Nov. 25, 1971, as amended at 43 FR 1340, Jan. 9, 1978]

§ 20.6 State certification.

The State certification shall be by the State certifying authority having jurisdiction with respect to the facility in accordance with 26 U.S.C. 169(d)(1)(A) and (d)(2). The certification shall state that the facility described in the application has been constructed, reconstructed, erected, or acquired in conformity with the State program or requirements for abatement or control of water or air pollution. It shall be executed by an agent or officer authorized to act on behalf of the State certifying authority.

§ 20.7 General policies.

(a) The general policies of the United States for cooperation with the States in the prevention and abatement of water pollution are: To enhance the quality and value of our water resources; to eliminate or reduce the pollution of the nation's waters and tributaries thereof; to improve the sanitary condition of surface and underground waters; and to conserve such waters for public water supplies, propagation of fish and aquatic life and wildlife, recreational purposes, and agricultural, industrial, and other legitimate uses.

(b) The general policy of the United States for cooperation with the States in the prevention and abatement of air pollution is to cooperate with and to assist the States and local governments in protecting and enhancing the quality of the Nation's air resources by the prevention and abatement of conditions which cause or contribute to air pollution which endangers the public health or welfare.

§ 20.8 Requirements for certification.

(a) Subject to § 20.9, the Regional Administrator will certify a facility if he makes the following determinations:

(1) It has been certified by the State certifying authority.

(2) That the facility: (i) Removes, alters, disposes of, stores, or prevents the creation of pollutants, contaminants, wastes, or heat, which, but for the facility, would be released into the environment;

(ii) Does not by a factor or more than 5 percent: (A) Increase the output or capacity, (B) extend the useful life, or (C) reduce the total operating costs of the operating unit (of the plant or other property) most directly associated with the pollution control facility; and

(iii) Does not significantly alter the nature of the manufacturing or production process or facility.

(3) The applicant is in compliance with all regulations of Federal agencies applicable to use of the facility, including conditions specified in any NPDES permit issued to the applicant under section 402 of the Act.

(4) The facility furthers the general policies of the United States and the States in the prevention and abatement of pollution.

(5) The applicant has complied with all the other requirements of this part and has submitted all requested information.

(b) In determining whether use of a facility furthers the general policies of the United States and the States in the

prevention and abatement of water pollution, the Regional Administrator shall consider whether such facility is consistent with the following, insofar as they are applicable to the waters which will be affected by the facility:

(1) All applicable water quality standards, including water quality criteria and plans of implementation and enforcement established pursuant to section 303 of the Act or State laws or regulations;

(2) Decisions issued pursuant to section 310 of the Act;

(3) Water pollution control programs required pursuant to any one or more of the following sections of the Act: Section 306, section 307, section 311, section 318, or section 405; or in order to be consistent with a plan under section 208.

(c) In determining whether use of a facility furthers the general policies of the United States and the States in the prevention and abatement of air pollution, the Regional Administrator shall consider whether such facility is consistent with and meets the following requirements, insofar as they are applicable to the air which will be affected by the facility;

(1) Plans for the implementation, maintenance, and enforcement of ambient air quality standards adopted or promulgated pursuant to section 110 of the Act;

(2) Recommendations issued pursuant to sections 103(e) and 115 of the Act which are applicable to facilities of the same type and located in the area to which the recommendations are directed;

(3) Local government requirements for control of air pollution, including emission standards;

(4) Standards promulgated by the Administrator pursuant to the Act.

(d) A facility that removes elements or compounds from fuels that would be released as pollutants when such fuels are burned is eligible for certification if the facility is—

(1) Used in connection with a plant or other property in operation before January 1, 1976 (whether located and used at a particular plant or as a centralized facility for one or more plants), and

(2) Is otherwise eligible for certification.

(e) Where a facility is used in connection with more than one plant or other property, one or more of which were not in operation before January 1, 1976, or where a facility will perform a function other than the removal, alteration, storage, disposal, or prevention of pollutants, contaminants, wastes, or heat, the Regional Administrator will so indicate on the notice of certification and will approve or disapprove the applicant's suggested method of allocating costs. If the Regional Administrator disapproves the applicant's suggested method, he shall identify the proportion of costs allocable to each such plant, or to the removal, alteration, storage, disposal, or prevention of pollutants, contaminants, wastes, or heat.

[36 FR 22382, Nov. 25, 1971, as amended at 43 FR 1341, Jan. 9, 1978]

§ 20.9 Cost recovery.

Where it appears that, by reason of estimated profits to be derived through the recovery of wastes, through separate charges for use of the facility in question, or otherwise in the operation of such facility, all or a portion of its costs may be recovered over the period referred to in paragraph (a)(6) of 26 CFR 1.169–2, the Regional Administrator shall so signify in the notice of certification. Determinations as to the meaning of the term *estimated profits* and as to the percentage of the cost of a certified facility which will be recovered over such period shall be made by the Secretary of the Treasury, or his delegate: *Provided,* That in no event shall estimated profits be deemed to arise from the use or reuse by the applicant of recovered waste.

§ 20.10 Revocation.

Certification hereunder may be revoked by the Regional Administrator on 30 days written notice to the applicant, served by certified mail, whenever the Regional Administrator shall determine that the facility in question is no longer being operated consistent with the § 20.8(b) and (c) criteria in effect at the time the facility was placed in service. Within such 30-day period, the applicant may submit to the Regional Administrator such evidence, data or other written materials as the

applicant may deem appropriate to show why the certification hereunder should not be revoked. Notification of a revocation under this section shall be given to the Secretary of the Treasury or his delegate. See 26 CFR 1.169–4(b)(1).

APPENDIX A—GUIDELINES FOR CERTIFICATION

1. General.
2. Air Pollution Control Facilities.
a. Pollution control or treatment facilities normally eligible for certification.
b. Air pollution control facility boundaries.
c. Examples of eligibility limits.
d. Replacement of manufacturing process by another nonpolluting process.
3. Water Pollution Control Facilities.
a. Pollution control or treatment facilities normally eligible for certification.
b. Examples of eligibility limits.
4. Multiple-purpose facilities.
5. Facilities serving both old and new plants.
6. State certification.
7. Dispersal of pollutants.
8. Profit-making facilities.
9. Multiple applications.

1. *General.* Section 2112 of the Tax Reform Act of 1976 (Pub. L. 94–455, October 4, 1976) amended section 169 of the Internal Revenue Code of 1954, ''Amortization of Pollution Control Facilities.'' The amendment made permanent the rapid amortization provisions of section 704 of the Tax Reform Act of 1969 (Pub. L. 91–172, December 30, 1969) and redefined eligibility limits to allow certification of facilities which prevent the creation or emission of pollutants.

The law defines a *certified pollution control facility* as *a new identifiable treatment facility* which is:

(a) Used in connection with a plant or other property in operation before January 1, 1976, to abate or control air or water pollution by removing, altering, disposing of, storing, or preventing the creation or emission of pollutants, contaminants, wastes, or heat;

(b) Constructed, reconstructed, erected or (if purchased) first placed in service by the taxpayer after December 31, 1975;

(c) Not to *significantly* increase the output or capacity, extend the useful life, alter the nature of the manufacturing or production process or facility or reduce the total operating costs of the operating unit of the plant or other property most directly associated with the pollution control facility (as suggested by the legislative history, EPA regulations define the term *significant* as any increase, reduction or extension greater than 5%); and

(d) Certified by both State and Federal authorities, as provided in section 169(d)(1) (A) and (B) of the Internal Revenue Code.

If the facility is a building, the statute requires that it be exclusively devoted to pollution control. Most questions as to whether a facility is a *building* and, if so, whether it is *exclusively* devoted to pollution control are resolved by §1.169–2(b)(2) of the Treasury Department regulations.

Since a treatment facility is eligible only if it furthers the general policies of the United States under the Clean Air Act and the Clean Water Act, a facility will be certified only if its purpose is to improve the quality of the air or water outside the plant. Facilities to protect the health or safety of employees inside the plant are not eligible.

Facilities installed before January 1, 1976, in plants placed in operation after December 31, 1968, are ineligible for certification under the statute. 26 U.S.C. 169.

2. *Air pollution control facilities.*

a. *Pollution control or treatment facilities normally eligible for certification.* The following devices are illustrative of facilities for removal, alteration, disposal, storage or preventing the creation or emission of air pollution:

(1) Inertial separators (cyclones, etc.).
(2) Wet collection devices (scrubbers).
(3) Electrostatic precipitators.
(4) Cloth filter collectors (baghouses).
(5) Director fired afterburners.
(6) Catalytic afterburners.
(7) Gas absorption equipment.
(8) Vapor condensers.
(9) Vapor recovery systems.
(10) Floating roofs for storage tanks.
(11) Fuel cleaning equipment.
(12) Combinations of the above.

(b) *Air Pollution control facility boundaries.* Most facilities are systems consisting of several parts. A facility need not start at the point where the gaseous effluent leaves the last unit of the processing equipment, nor will it always extend to the point where the effluent is emitted to the atmosphere or existing stack, breeching, ductwork or vent. It includes all the auxiliary equipment used to operate the control system, such as fans, blowers, ductwork, valves, dampers and electrical equipment. It also includes all equipment used to handle, store, transport or dispose of the collected pollutants.

(c) *Examples of eligibility limits.* The amortization deduction is limited to new identifiable treatment facilities which remove, alter, destroy, dispose of, store, or prevent the creation or emission of pollutants, contaminants or wastes. It is not available for all expenditures for air pollution control and is limited to devices which are installed for the purpose of pollution control and which actually remove, alter, destroy, dispose of, store or prevent the creation or emission of

pollutants by removing potential pollutants at any stage of the production process.

(1) *Boiler modifications or replacements.* Modifications of boilers to accommodate *cleaner* fuels are not eligible for rapid amortization: e.g., removal of stokers from a coal-fired boiler and the addition of gas or oil burners. The purpose of the burners is to produce heat, and they are not identifiable as treatment facilities nor do they prevent the creation or emission of pollutants by removing potential pollutants. A new gas or oil-fired boiler that replaces a coal-fired boiler would also be ineligible for certification.

(2) *Fuel processing.* Eligible air pollution control facilities include preprocessing equipment which removes potential air pollutants from fuels before they are burned. A desulfurization facility would thus be eligible provided it is used in connection with the plant where the desulfurized coal will be burned or is used as a centralized facility for one or more plants. However, fluidized bed facilities would generally not be eligible for rapid amortization. Such facilities would almost certainly increase output or capacity, reduce total operating costs, or extend the useful life of the plant or other property by more than 5%, since the boiler itself would be the operating unit of the plant most closely associated with the pollution control facility. Where the Regional Office and the taxpayer disagree as to the applicability of the 5% rule, the Regional office should nonetheless certify the facility if it is otherwise eligible and leave the ultimate determination to the Treasury Department. The certification should alert Treasury to the possibility that the facility is ineligible for rapid amortization.

(3) *Incinerators.* The addition of an afterburner, secondary combustion chamber or particulate collector would be eligible as would any device added to effect more efficient combustion.

(4) *Collection devices used to collect products or process material.* In some manufacturing operations, devices are used to collect product or process material, as in the case of the manufacture of carbon black. The baghouse would be eligible for certification, but the certification should notify the Treasury Department of the profitable waste recovery involved. (See paragraph 8 below.)

(5) *Intermittent control systems.* Measuring devices which inform the taxpayer that ambient air quality standards are being exceeded are not eligible for certification since they do not physically remove, alter, destroy, dispose of, store or prevent the creation or emission of pollutants, but merely act as a signal to curtail operations. Of course, measuring devices used in connection with an eligible pollution control facility would be eligible.

d. *Replacement of manufacturing process by another, nonpolluting process.* An installation does not qualify for certification where it uses a process known to be *cleaner* than an alternative, but which does not actually remove, alter, destroy, dispose of, store or prevent the creation or emission of pollutants by removing potential pollutants at any stage in the production process. For example, a minimally polluting electric induction furnace to melt cast iron which replaces, or is installed instead of, a heavily polluting iron cupola furnace would be ineligible for this reason and because it is not an identifiable treatment facility. However, if the replacement equipment has an air pollution control device added to it, the control device would be eligible even though the process equipment would not. For example, where a primary copper smelting reverberatory furnace is replaced by a flash smelting furnace, followed by the installation of a contact sulfuric acid plant, the acid plant would qualify since it is a control device not necessary to the production process. The flash smelting furnace would not qualify because its purpose is to produce copper matte.

3. *Water Pollution Control Facilities.*

a. *Pollution control or treatment facilities normally eligible for certification.* The following types of equipment are illustrative of facilities to remove, alter, destroy, store or prevent the creation of water pollution:

(1) Pretreatment facilities which neutralize or stabilize industrial or sanitary wastes, or both, from a point immediately preceding the point of such treatment to the point of disposal to, and acceptance by, a publicly-owned treatment works. The necessary pumping and transmitting facilities are also eligible.

(2) Treatment facilities which neutralize or stabilize industrial or sanitary wastes, or both, to comply with Federal, State or local effluent or water quality standards, from a point immediately preceding the point of such treatment to the point of disposal, including necessary pumping and transmitting facilities, including those for recycle or segregation of wastewater.

(3) Ancillary devices and facilities such as lagoons, ponds and structures for storage, recycle, segregation or treatment, or any combination of these, of wastewaters or wastes from a plant or other property.

(4) Devices, equipment or facilities constructed or installed for the primary purpose of recovering a by-product of the operation (saleable or otherwise) previously lost either to the atmosphere or to the waste effluent. Examples are:

(A) A facility to concentrate and recover vaporous by-products from a process stream for reuse as raw feedstock or for resale, unless the estimated profits from resale exceed the cost of the facility (see paragraph 8 below).

(B) A facility to concentrate or remove *gunk* or similar *tars* or polymerized tar-like

materials from the process waste effluent previously discharged in the plant effluents. Removal may occur at any stage of the production process.

(C) A device used to extract or remove insoluble constitutents from a solid or liquid by use of a selective solvent; an open or closed tank or vessel in which such extraction or removal occurs; a diffusion battery of tanks or vessels for countercurrent decantation, extraction, or leaching, etc.

(D) A skimmer or similar device for removing grease, oils and fat-like materials from the process or effluent stream.

(b) *Examples of eligibility limits.*

(1) In-plant process changes which may result in the reduction or elimination of pollution but which do not themselves remove, alter, destroy, dispose of, store or prevent the creation of pollutants by removing potential pollutants at some point in the process stream are not eligible for certification.

(2) A device, piece of equipment or facility is not eligible if it is associated with or included in a stream for subsurface injection of untreated or inadequately treated industrial or sanitary waste.

4. *Multiple-purpose facilities.* A facility can qualify for rapid amortization if it serves a function other than the abatement of pollution (unless it is a building). Otherwise, the effect might be to discourage installation of sensible pollution abatement facilities in favor of less efficient single-function facilities.

The regulations require applicants to state what percentage of the cost of a facility is properly allocable to its abatement function and to justify the allocation. The Regional Office will review these allocations, and the certification will inform the Treasury Department if the allocation appears to be incorrect. Although not generally necessary or desireable, site inspections may be appropriate in cases involving large sums of money or unusual types of equipment.

5. *Facilities serving both old and new plants.* The statute provides that pollution control facilities must be used in connection with a plant or other property in operation before January 1, 1976. When a facility is used in connection with both pre-1976 and newer property, it may qualify for rapid amortization to the extent it is used in connection with pre-1976 property.

Again, the applicant will submit a theory of allocation for review by the Regional Office. The usual method of allocation is to compare the effluent capacity of the pre-1976 plant to the treatment capacity of the control facility. For example, if the old plant has a capacity of 80 units of effluent (but an average output of 60 units), the new plant has a capacity of 40 units (but an average output of 20 units), and the control facility has a capacity of 150 units, then $^{80}/_{150}$ of the cost of the control facility would be eligible for rapid amortization.

If a taxpayer presents a seemingly reasonable method of allocation different from the foregoing, Regional Office personnel should consult with the Office of Air Quality Planning and Standards or the Office of Water Planning and Standards, and with the Office of General Counsel.

6. *State certification.* To qualify for rapid amortization under section 169, a facility must first be certified by the State as having been installed ''in conformity with the State program or requirements for abatement or control of water or atmospheric pollution or contamination.'' Significantly, the statute does not say that the State must require that a facility be installed. If use of a facility will not actually contravene a State requirement, the State may certify. However, since State certification is a prerequisite to EPA certification, EPA may not certify if the State has denied certification for whatever reason.

It should be noted that certification of a facility does not constitute the personal warranty of the certifying official that the conditions of the statute have been met. EPA certification is binding on the Government only to the extent the submitted facts are accurate and complete.

7. *Dispersal of pollutants.* Section 169 applies to facilities which remove, alter, destroy, dispose of, store or prevent the creation or emission of pollutants—including heat. Facilities which merely disperse pollutants (such as tall stacks) do not qualify. However, there is no way to *dispose of* heat other than by transferring B.t.u.'s to the environment. A cooling tower is therefore eligible for certification provided it is used in connection with a pre-1976 plant. A cooling pond or an addition to an outfall structure which results in a decrease in the amount by which the temperature of the receiving water is raised and which meets applicable State standards is likewise eligible.

8. *Profit-making facilities.* The statute denies rapid amortization where the cost of pollution control facilities will be recovered from profits derived through the recovery or wastes *or otherwise.*

If a facility recovers marketable wastes, estimated profits on which are not sufficient to recover the entire cost of the facility, the amortization basis of the facility will be reduced in accordance with Treasury Department regulations. The responsibility of the Regional Offices is merely to identify for the Treasury Department those cases in which estimated profits will arise. The Treasury Department will determine the amount of such profits and the extent to which they can be expected to result in cost recovery, but the EPA certification should inform the Treasury whether cost recovery is possible.

The phrase *or otherwise* also includes situations where the taxpayer is in the business of renting the facility for a fee or charging for the treatment of waste. In such cases, the facility may theoretically qualify for EPA certification. The decision as to the extent of its profitability is for the Treasury Department. Situations may also arise where use of a facility is furnished at no additional charge to a number of users, or to the public, as part of a package of other services. In such cases, no profits will be deemed to arise from operation of the facility unless the other services included in the package are merely ancillary to use of the facility. Of course, the cost recovery provision does not apply where a taxpayer merely recovers the cost of a facility through general revenues; otherwise no profitable firm would ever be eligible for rapid amortization.

It should be noted that §20.9 of the EPA regulation is not meant to affect general principles of Federal income tax law. An individual other than the title holder of a piece of property may be entitled to take depreciation deductions on it if the arrangements by which such individual has use of the property may, for all practical purposes, be viewed as a purchase. In any such case, the facility could qualify for full rapid amortization, notwithstanding the fact that the title holder charges a separate fee for the use of the facility, so long as the taxpayer—in such a case, the user—does not charge a separate fee for use of the facility.

9. *Multiple applications.* Under EPA regulations, a multiple application may be submitted by a taxpayer who applies for certification of substantially identical pollution abatement facilities used in connection with substantially identical properties. It is not contemplated that the multiple application option will be used with respect to facilities in different States, since each such facility would require a separate application for certification to the State involved. EPA regulations also permit an applicant to incorporate by reference in an application material contained in an application previously filed. The purpose of this provision is to avoid the burden of furnishing detailed information (which may in some cases include portions of catalogs or process flow diagrams) which the certifying official has previously received. Accordingly, material filed with a Regional Office of EPA may be incorporated by reference only in an application subsequently filed with the same Regional Office.

[47 FR 38319, Aug. 31, 1982]

PART 21—SMALL BUSINESS

Sec.

21.1 Scope.
21.2 Definitions.
21.3 Submission of applications.
21.4 Review of application.
21.5 Issuance of statements.
21.6 Exclusions.
21.7 [Reserved]
21.8 Resubmission of application.
21.9 Appeals.
21.10 Utilization of the statement.
21.11 Public participation.
21.12 State issued statements.
21.13 Effect of certification upon authority to enforce applicable standards.

AUTHORITY: 15 U.S.C. 636, as amended by Pub. L. 92–500.

SOURCE: 42 FR 8083, Feb. 8, 1977, unless otherwise noted.

§ 21.1 Scope.

This part establishes procedures for the issuance by EPA of the statements, referred to in section 7(g) of the Small Business Act and section 8 of the Federal Water Pollution Control Act Amendments of 1972, to the effect that additions to or alterations in the equipment, facilities (including the construction of pretreatment facilities and interceptor sewers), or methods of operations of small business concerns are necessary and adequate to comply with requirements established under the Federal Water Pollution Control Act, 33 U.S.C. 1151, *et seq.*

§ 21.2 Definitions.

(a) *Small business concern* means a concern defined by section 2[3] of the Small Business Act, 15 U.S.C. 632, 13 CFR part 121, and regulations of the Small Business Administration promulgated thereunder.

(b) For purposes of paragraph 7(g)(2) of the Small Business Act, *necessary and adequate* refers to additions, alterations, or methods of operation in the absence of which a small business concern could not comply with one or more applicable standards. This can be determined with reference to design specifications provided by manufacturers, suppliers, or consulting engineers; including, without limitations, additions, alterations, or methods of operation the design specifications of which will provide a measure of treatment or abatement of pollution in excess of that required by the applicable standard.

(c) *Applicable Standard* means any requirement, not subject to an exception under §21.6, relating to the quality of

water containing or potentially containing pollutants, if such requirement is imposed by:

(1) The Act;

(2) EPA regulations promulgated thereunder or permits issued by EPA or a State thereunder;

(3) Regulations by any other Federal Agency promulgated thereunder;

(4) Any State standard or requirement as applicable under section 510 of the Act;

(5) Any requirements necessary to comply with an areawide management plan approved pursuant to section 208(b) of the Act;

(6) Any requirements necessary to comply with a facilities plan developed under section 201 of the Act (see 35 CFR, subpart E);

(7) Any State regulations or laws controlling the disposal of aqueous pollutants that may affect groundwater.

(d) *Regional Administrator* means the Regional Administrator of EPA for the region including the State in which the facility or method of operation is located, or his designee.

(e) *Act* means the Federal Water Pollution Control Act, 33 U.S.C. 1151, *et seq*.

(f) *Pollutant* means dredged spoil, solid waste, incinerator residue, sewage, garbage, sewage sludge, munitions, chemical wastes, biological materials, radioactive materials, heat, wrecked or discarded equipment, rock, sand, cellar dirt and industrial, municipal, and agricultural waste discharged into water. For the purposes of this section, the term also means sewage from vessels within the meaning of section 312 of the Act.

(g) *Permit* means any permit issued by either EPA or a State under the authority of section 402 of the Act; or by the Corps of Engineers under section 404 of the Act.

(h) *State* means a State, the District of Columbia, the Commonwealth of Puerto Rico, the Virgin Islands, Guam, American Samoa, and the Trust Territory of the Pacific Islands.

Comment: As the SBA does not extend its programs to the Canal Zone, the listing of the Canal Zone as a State for the purposes of meeting a requirement imposed by section 311 or 312 of the Act is not effective in this regulation.

(i) *Statement* means a written approval by EPA, or if appropriate, a State, of the application.

(j) *Facility* means any building, structure, installation or vessel, or portion thereof.

(k) *Construction* means the erection, building, acquisition, alteration, remodeling, modification, improvement, or extension of any facility; *Provided*, That it does not mean preparation or undertaking of: Plans to determine feasibility; engineering, architectural, legal, fiscal, or economic investigations or studies; surveys, designs, plans, writings, drawings, specifications or procedures.

Comment: This provision would not later preclude SBA financial assistance being utilized for any planning or design effort conducted previous to construction.

(l) The term *additions and alterations* means the act of undertaking construction of any facility.

(m) The term *methods of operation* means the installation, emplacement, or introduction of materials, including those involved in construction, to achieve a process or procedure to control: Surface water pollution from nonpoint sources—that is, agricultural, forest practices, mining, construction; ground or surface water pollution from well, subsurface, or surface disposal operations; activities resulting in salt water intrusion; or changes in the movement, flow, or circulation of navigable or ground waters.

(n) The term *vessel* means every description of watercraft or other artificial contrivance used, or capable of being used, as a means of transportation on the navigable waters of the United States other than a vessel owned or operated by the United States or a State or a political subdivision thereof, or a foreign nation; and is used for commercial purposes by a small business concern.

(o) *EPA* means the Environmental Protection Agency.

(p) *SBA* means the Small Business Administration.

(q) *Areawide agency* means an areawide management agency designated under section 208(c)(1) of the Act.

(r) *Lateral sewer* means a sewer which connects the collector sewer to the interceptor sewer.

(s) *Interceptor sewer* means a sewer whose primary purpose is to transport wastewaters from collector sewers to a treatment facility.

§ 21.3 Submission of applications.

(a) Applications for the statement described in §21.5 of this part shall be made to the EPA Regional Office for the region covering the State in which the additions, alterations, or methods of operation covered by the application are located. A listing of EPA Regional Offices, with their mailing addresses, and setting forth the States within each region is as follows:

Region	Address	State
I	Regional Administrator, region I, EPA, John F. Kennedy Federal Bldg., room 2303, Boston, MA 02203.	Connecticut, Maine, Massachusetts, New Hampshire, Rhode Island, and Vermont.
II	Regional Administrator, region II, EPA, 26 Federal Plaza, room 908, New York, NY 10007.	New Jersey, New York, Virgin Islands, and Puerto Rico.
III	Regional Administrator, region III, EPA, Curtis Bldg., 6th and Walnut Sts., Philadelphia, PA 19106.	Delaware, District of Columbia, Pennsylvania, Maryland, Virginia, and West Virginia.
IV	Regional Administrator, region IV, EPA, 345 Courtland St. NE., Atlanta, GA 30308.	Alabama, Florida, Georgia, Kentucky, Mississippi, North Carolina, South Carolina, and Tennessee.
V	Regional Administrator, region V, EPA, 230 South Dearborn St., Chicago, IL 60604.	Illinois, Indiana, Michigan, Minnesota, Ohio, and Wisconsin.
VI	Regional Administrator, region VI, EPA, 1201 Elm St., 27th floor, First International Bldg., 70 Dallas, TX 75201.	Arkansas, Louisiana, New Mexico, Oklahoma, and Texas.
VII	Regional Administrator, region VII, EPA, 1735 Baltimore Ave., Kansas City, MO 64108.	Iowa, Kansas, Missouri, and Nebraska.
VIII	Regional Administrator, region VIII, EPA, 1860 Lincoln St., Suite 900, Denver, CO 80203.	Colorado, Montana, North Dakota, South Dakota, Utah, and Wyoming.
IX	Regional Administrator, region IX, EPA, 100 California St., San Francisco, CA 94111.	Arizona, California, Hawaii, Nevada, Guam, American Samoa, and Trust Territory of the Pacific Islands.
X	Regional Administrator, region X, EPA, 1200 6th Ave., Seattle, WA 98101.	Alaska, Idaho, Oregon, and Washington.

(b) An application described in paragraph (1) of §21.3(c) may be submitted directly to the appropriate State, where a State has assumed responsibility for issuing the statement. Information on whether EPA has retained responsibility for certification or whether it has been assumed by the State may be obtained from either the appropriate Regional Administrator or the State Water Pollution Control Authority in which the facility is located.

(c) An application need be in no particular form, but it must be in writing and must include the following:

(1) Name of applicant (including business name, if different) and mailing address. Address of the affected facility or operation, if different, should also be included.

(2) Signature of the owner, partner, or principal executive officer requesting the statement.

(3) The Standard Industrial Classification number for the business for which an application is being submitted. Such SIC number shall be obtained from the Standard Industrial Classification Manual, 1972 edition. If the applicant does not know the SIC for the business, a brief description of the type of business activity being conducted should be provided.

(4) A description of the process or activity generating the pollution to be abated by the additions, alterations, or methods of operation covered by the application, accompanied by a schematic diagram of the major equipment and process, where practicable.

(5) A specific description of the additions, alterations, or methods of operation covered by the application. Where appropriate, such description will include a summary of the facility construction to be undertaken; a listing of the major equipment to be purchased or utilized in the operation of the facility; the purchase of any land or easements necessary to the operation of the facility; and any other

items that the applicant deems pertinent. Any information that the applicant considers to be a trade secret shall be identified as such.

(6) A declaration of the requirement, or requirements, for compliance with which the alterations, additions, or methods of operation are claimed to be necessary and adequate.

(i) If the requirement results from a permit issued by EPA or a State under section 402 of the Act, the permit number shall be included.

(ii) If the requirement results from a permit issued by EPA or a State for a publicly-owned treatment works, the municipal permit number shall be included along with a written declaration from the authorized agent for the publicly owned treatment works that received the permit detailing the specific pretreatment requirements being placed upon the applicant.

(iii) If the requirement initiates from a plan to include the applicant's effluent in an existing municipal sewer system through the construction of lateral or interceptor sewers, a written declaration from the authorized agent for the publicly owned treatment works shall be included noting that the sewer construction is consistent with the integrity of the system; will not result in the capacity of the publicly owned treatment works being exceeded; and where applicable, is consistent with a facilities plan developed under section 201 of the Act (see 35 CFR part 917).

(iv) If the requirement results from a State order, regulation, or other enforceable authority controlling pollution from a vessel as provided by section 312(f)(3) of the Act, a written declaration from the authorized agent of the State specifying the control measures being required of the applicant shall be included.

(v) If the requirement is a result of a permit issued by the Corps of Engineers related to permits for dredged or fill material as provided by section 404 of the Act, a copy of the permit as issued shall be included.

(vi) If the requirement results from a standard of performance for control of sewage from vessels as promulgated by the Coast Guard under section 312(b) of the Act, the vessel registration number or documentation number shall be included.

(vii) If the requirement results from a plan to control or prevent the discharge or spill of pollutants as identified in section 311 of the Act, the title and date of that plan shall be included.

(viii) If the requirement is the result of an order by a State or an areawide management agency controlling the disposal of aqueous pollutants so as to protect groundwater, a copy of the order as issued shall be included.

(7) Additionally, if the applicant has received from a State Water Pollution Control Agency a permit issued by the State within the preceding two years, and if such permit was not issued under the authorities of section 402 of the Act, and where the permit directly relates to abatement of the discharge for which a statement is sought, a copy of that permit shall also be included.

Comment: Some States under State permit programs, separate and distinct from the NPDES permit program under the Act, conduct an engineering review of the facilities or equipment that would be used to control pollution. The results of such a review would be materially helpful in determining the necessity and adequacy of any alterations or additions.

(8) Any written information from a manufacturer, supplier, or consulting engineer, or similar independent source, concerning the design capabilities of the additions or alterations covered by the application, including any warranty limitations or certifications obtained from or provided by such sources which would bear upon these design or performance capabilities. The Regional Administrator may waive the requirement for this paragraph if it appears that there is no independent source for the information described herein; as, for example, when the applicant has designed and constructed the additions or alterations with in-house capability.

(9) An estimated schedule for the construction or implementation of the alterations, additions, or methods of operation.

(10) An estimated cost of the alterations, additions, or methods of operation, and where practicable, the individual costs of major elements of the construction to be undertaken.

(11) Information on previously received loan assistance under this section for the facility or method of operation, including a description and dates of the activity funded.

(d) A separate application must be submitted for every addition, alteration, or method of operation that is at a separate geographical location from the initial application.

Comment: As an example, a chain has four dry cleaning establishments scattered through a community. A separate application would have to be filed for each.

(e) No statement shall be approved for any application that has not included the information or declaration requirements imposed by paragraph (c)(6) of § 21.3.

(f) All applications are to be submitted in duplicate.

(g) All applications are subject to the provisions of 18 U.S.C. 1001 regarding prosecution for the making of false statements or the concealing of material facts.

(h) Instructional guidelines to assist in the submission of applications for EPA certification are available from EPA or a certifying State.

§ 21.4 Review of application.

(a) The Regional Administrator or his designee will conduct a review of the application. This review will consist of a general assessment of the adequacy of the proposed alterations, additions, or methods of operation. The review will corroborate that the proposed alterations, additions, or methods of operation are required by an applicable standard. The review will identify any proposed alterations, additions, or methods of operation that are not required by an applicable standard, or that are extraneous to the achievement of an applicable standard.

(b) The assessment of adequacy will be conducted to ensure that the proposed additions, alterations, or methods of operation are sufficient to meet one or more applicable standards whether alone or in conjunction with other plans. The assessment will not generally examine whether other alternatives exist or would be more meritorious from a cost-effective, efficiency, or technological standpoint.

(c) An application which proposes additions, alterations, or methods of operation whose design, in anticipation of a future requirement, will achieve a level of performance above the requirements imposed by a presently applicable standard shall be reviewed and approved by EPA or a State without prejudice. The amount of financial assistance for such an application will be determined by SBA.

(d) The Regional Administrator shall retain one copy of the application and a summary of the action taken on it. Upon completion of his review, the Regional Administrator shall return the original application along with any other supporting documents or information provided to the applicant along with a copy to the appropriate SBA district office for processing.

§ 21.5 Issuance of statements.

(a) Upon application by a small business concern pursuant to § 21.3 the Regional Administrator will, if he finds that the additions, alterations, or methods of operation covered by the application are adequate and necessary to comply with an applicable standard, issue a written statement to the applicant to that effect, within 45 working days following receipt of the application, or within 45 working days following receipt of all information required to be submitted pursuant to § 21.3(c), whichever is later. Such a written statement shall be classified as a full approval. If an application is deficient in any respect, with regard to the specifications for submission listed in § 21.3(c), the Regional Administrator shall promptly, but in no event later than 30 working days following receipt of the application, notify the applicant of such deficiency.

(b) (1) If an application contains proposed alterations, additions, or methods of operation that are adequate and necessary to comply with an applicable standard but also contains proposed alterations, additions, or methods of operation that are not necessary to comply with an applicable standard, the Regional Administrator shall conditionally approve the application within the time limit specified in paragraph (a) of this section, and shall also identify in the approval those alterations,

additions, or methods of operation that he determines are not necessary.

(2) Conditional approvals as contained in a statement will satisfy the requirements for approval by EPA for those alterations, additions, or methods of operation determined to be necessary and adequate. Such conditional approvals may be submitted to SBA in satisfaction of the requirements of section 7(g)(2)(B) of the Small Business Act.

(3) Conditional approvals will not satisfy the requirements for approval by EPA for those alterations, additions, or methods of operation included in the application that are determined not to be necessary. Unnecessary alterations, additions, or methods of operation are those which are extraneous to the achievement of an applicable standard.

(4) Conditional approvals may be appealed to the Deputy Administrator by an applicant in accordance with the procedures identified in § 21.8.

(c) If the Regional Administrator determines that the additions, alterations, or methods of operation covered by an application are not necessary and adequate to comply with an applicable standard, he shall disapprove the application and shall so advise the applicant of such determination within the time limit specified in paragraph (a) of this section, and shall state in writing the reasons for his determination.

(d) Any application shall be disapproved if the Regional Administrator determines that the proposed addition, alteration, or method of operation would result in the violation of any other requirement of this Act, or of any other Federal or State law or regulation with respect to the protection of the environment.

(e) An applicant need not demonstrate that its facility or method of operation will meet all applicable requirements established under the Act. The applicant need only demonstrate that the additions, alterations, or methods of operation will assist in ensuring compliance with one or more of the applicable standards for which financial assistance is being requested.

Comment: As an example, a small business has two discharge pipes—one for process water, the other for cooling water. The application for loan assistance is to control pollution from the process water discharge. However, EPA or a State may review the applicant's situation and identify for SBA that the applicant is subject to other requirements for which the applicant has not sought assistance.

(f) An application should not include major alternative designs significantly differing in scope, concept, or capability. It is expected that the applicant at the time of submission will have selected the most appropriate or suitable design for the addition, alteration, or method of operation.

(g) EPA will not provide assistance in the form of engineering, design, planning or other technical services to any applicant in the preparation of his application.

(h) An applicant may be issued a certification for additions, alterations, or methods of operation constructed or undertaken before loan assistance was applied for by the applicant. Any such applications would be reviewed by SBA for eligibility under SBA criteria, including refinancing and loan exposure.

§ 21.6 Exclusions.

(a) Statements shall not be issued for applications in the following areas:

(1) *Local requirements.* Applications for statements for additions, alterations, or methods of operation that result from requirements imposed by municipalities, counties or other forms of local or regional authorities and governments, except for areawide management agencies designated and approved under section 208 of the Act, shall not be approved; except for those requirements resulting from the application of pretreatment requirements under section 307(b) of the Act; or those resulting from an approved project for facilities plans, and developed under section 201 of the Act. (See 35 CFR, subpart E); or under a delegation of authority under the Act.

(2) *Cost recovery and user charges.* Applications for statements involving a request for financial assistance in meeting revenue and service charges imposed upon a small business by a municipality conforming to regulations governing a user charge or capital cost system under section 204(b)(2)

of the Act (see 35 CFR 925–11 and 925–12) shall not be approved.

(3) *New facility sewer construction.* Applications for statements involving projects that involve the construction of a lateral, collection, or interceptor sewer, at a facility that was not in existence on October 18, 1972, shall not be approved. Applications for additions, alterations, or methods of operation for new facilities that do not involve sewer construction are not affected by this preclusion. Further, if an applicant is compelled to move as a result of a relocation requirement but operated at the facility prior to October 18, 1972, the cost of construction for a lateral, collection, or interceptor sewer can be approved for the new, relocated site. For the purpose of this exclusion lateral, collection, or interceptor sewer is determined as any sewer transporting waste from a facility or site to any publicly owned sewer.

(4) Other non-water related pollution abatement additions, alterations, or methods of operation which are not integral to meeting the requirements of the Act, although they may be achieving the requirements of another Federal or State law or regulation.

Comment: An example would be where stack emission controls were required on equipment that operated the water pollution control facility. This emission control equipment as an integral part of the water pollution control systems would be approvable. However, emission control equipment for a general purpose incinerator that only incidentally burned sewage sludge would not be approvable. The general purpose incinerator might also receive loan assistance but under separate procedures than those set out for water pollution control.

(5) *Privately owned treatment facility service or user costs.* Applications for statements involving financial assistance in meeting user cost or fee schedules related to participating in a privately owned treatment facility not under the ownership or control of the applicant shall not be approved.

(6) *Operation and maintenance charges.* Applications for statements containing a request for financial assistance in meeting the operations and maintenance costs of operating the applicant's additions, alterations, or methods of operation shall not be approved for any elements relating to such areas of cost.

(7) *Evidence of financial responsibility.* Applications for statements containing a request for financial assistance in meeting any requirements relating to evidence of financial responsibility as provided in section 311(p) of the Act shall not be approved.

§ 21.7 [Reserved]

Comment: Applications for a statement resulting from a requirement to control pollution from non-point sources as identified in section 304(e)(2)(A–F) of the Act and described in § 21.2(m) will not presently be issued a statement under § 21.5 unless the requirement is established through a permit under section 402. There is no requirement under the current Act that the Federal government control pollution from such sources, and the nature and scope of State or areawide management agency proposals or programs to control such sources cannot be determined at this time. As State and areawide plans for control of nonpoint sources being prepared under section 208 of the Act, will not be completed for several years, this section is being reserved pending a future determination on the eligibility of applications relating to non-profit sources to receive a statement under this part.

§ 21.8 Resubmission of application.

(a) A small business concern whose application is disapproved may submit an amended or corrected application to the Regional Administrator at any time. The applicant shall provide the date of any previous application.

§ 21.9 Appeals.

(a) An applicant aggrieved by a determination of a Regional Administrator under § 21.5 may appeal in writing to the Deputy Administrator of the Environmental Protection Agency, within 30 days of the date of the determination from which an appeal is taken; *Provided,* That the Deputy Administrator may, on good cause shown, accept an appeal at a later time.

(b) The applicant in requesting such an appeal shall submit to the Deputy Administrator a copy of the complete application as reviewed by the Regional Administrator.

(c) The applicant should also provide information as to why it believes the determination made by the Regional Administrator to be in error.

(d) The Deputy Administrator shall act upon such appeal within 60 days of receipt of any complete application for a review of the determination.

(e) Where a State has been delegated certification authority, the procedure for appeals shall be established in the State submission required in §21.12.

§21.10 Utilization of the statement.

(a) Statements issued by the Regional Administrator will be mailed to the small business applicant and to the district office of the Small Business Administration serving the geographic area where the business is located. It is the responsibility of the applicant to also forward the statement to SBA as part of the application for a loan.

(b) Any statement or determination issued under §21.5 shall not be altered, modified, changed, or destroyed by any applicant in the course of providing such statement to SBA. To do so can result in the revocation of any approval contained in the statement and subject the applicant to the penalties provided in 18 U.S.C. 1001.

(c) If an application for which a statement is issued under §21.5 is substantively changed in scope, concept, design, or capability prior to the approval by SBA of the financial assistance requested, the statement as issued shall be revoked. The applicant must resubmit a revised application under §21.3 and a new review must be conducted. Failure to meet the requirements of this paragraph could subject the applicant to the penalties specified in 18 U.S.C. 1001 and 18 U.S.C. 286. A substantive change is one which materially affects the performance or capability of the proposed addition, alteration, or method of operation.

(d) An agency, Regional Administrator, or State issuing a statement under §21.5 shall retain a complete copy of the application for a period of five years after the date of issuance of the statement. The application shall be made available upon request for inspection or use at any time by any agency of the Federal Government.

(e) No application for a statement or for financial assistance under this section or statement issued under this section shall constitute or be construed as suspending, modifying, revising, abrogating or otherwise changing the requirements imposed on the applicant by the terms, conditions, limitations or schedules of compliance contained in an applicable standard, permit, or other provision established or authorized under the Act or any State or local statute, ordinance or code.

(f) No statement as issued and reviewed shall be construed as a waiver to the applicants fulfilling the requirements of any State or local law, statute, ordinance, or code (including building, health, or zoning codes).

(g) An amended application need not be submitted if the facility, property, or operation for which the statement is issued is sold, leased, rented, or transferred by the applicant to another party prior to approval by SBA of the financial assistance: *Provided*, That there is or will be no substantive change in the scope, concept, design, capability, or conduct of the facility or operation.

Comment: However, eligibility for financial assistance would be reexamined by SBA with regard to any such sale, lease, rental or transfer.

(h) The Regional Administrator may include in any statement a date of expiration, after which date the approval by the Regional Administrator contained in the statement shall no longer apply. The date of expiration shall not become effective if the applicant has submitted the statement to the SBA, prior to the date of expiration, as part of the application for financial assistance.

§21.11 Public participation.

(a) Applications shall not generally be subject to public notice, public comment, or public hearings. Applications during the period of review as stated in §21.5, or during the period of appeal as provided in §21.8, shall be available for public inspection. Approved applications as provided in §21.10(d) shall be available for public inspection at all times during the five year period.

(b) The Regional Administrator, if he believes that the addition, alteration, or method of operation may adversely and significantly affect an interest of the public, shall provide for a public

notice and/or public hearing on the application. The public notice and/or public hearing shall be conducted in accordance with the procedures specified for a permit under 40 CFR 125.32 and 125.34(b).

(c) Where the applicant is able to demonstrate to the satisfaction of the Regional Administrator that disclosure of certain information or parts thereof as provided in § 21.3(c)(5) would result in the divulging of methods or processes entitled to protection as trade secrets, the Regional Administrator shall treat the information or the particular part as confidential in accordance with the purposes of section 1905 of Title 18 of the United States Code and not release it to any unauthorized person. *Provided, however,* That if access to such information is subsequently requested by any person, there will be compliance with the procedures specified in 40 CFR part 2. Such information may be disclosed to other officers, employees, or authorized representatives of the United States concerned with carrying out the Act or when relevant in any proceeding under the Act.

§ 21.12 State issued statements.

(a) Any State after the effective date of these regulations may submit to the Regional Administrator for his approval an application to conduct a program for issuing statements under this section.

(1) A State submission shall specify the organizational, legal, financial, and administrative resources and procedures that it believes will enable it to conduct the program.

(2) The State program shall constitute an equivalent effort to that required of EPA under this section.

(3) The State organization responsible for conducting the program should be the State water pollution control agency, as defined in section 502 of the Act.

(4) The State submission shall propose a procedure for adjudicating applicant appeals as provided under § 21.9.

(5) The State submission shall identify any existing or potential conflicts of interest on the part of any personnel who will or may review or approve applications.

(i) A conflict of interest shall exist where the reviewing official is the spouse of or dependent (as defined in the Tax Code, 26 U.S.C. 152) of an owner, partner, or principal officer of the small business, or where he has or is receiving from the small business concern applicant 10 percent of gross personal income for a calendar year, except that it shall mean 50 percent gross personal income for a calendar year if the recipient is over 60 years of age and is receiving such portion pursuant to retirement, pension, or similar arrangements.

(ii) If the State is unable to provide alternative parties to review or approve any application subject to conflict of interest, the Regional Administrator shall review and approve the application.

(b) The Regional Administrator, within 60 days after such application, shall approve any State program that conforms to the requirements of this Section. Any such approval shall be after sufficient notice has been provided to the Regional Director of SBA.

(c) If the Regional Administrator disapproves the application, he shall notify the State, in writing, of any deficiency in its application. A State may resubmit an amended application at any later time.

(d) Upon approval of a State submission, EPA will suspend all review of applications and issuance of statements for small businesses in that State, pending transferral. *Provided, however,* That in the event of a State conflict of interest as identified in § 21.12(a)(4) of this section, EPA shall review the application and issue the statement.

(e) Any applications shall, if received by an EPA Regional Office, be forwarded promptly to the appropriate State for action pursuant to section 7(g)(2) of the Small Business Act and these regulations.

(f) (1) EPA will generally not review or approve individual statements issued by a State. However, SBA, upon receipt and review of a State approved statement may request the Regional Administrator of EPA to review the statement. The Regional Administrator, upon such request can further approve or disapprove the State issued

statement, in accordance with the requirements of §21.5.

(2) The Regional Administrator will periodically review State program performance. In the event of State program deficiencies the Regional Administrator will notify the State of such deficiencies.

(3) During that period that any State's program is classified as deficient, statements issued by a State shall also be sent to the Regional Administrator for review. The Regional Administrator shall notify the State, the applicant, and the SBA of any determination subsequently made, in accordance with §21.5, on any such statement.

(i) If within 60 days after notice of such deficiencies has been provided, the State has not taken corrective efforts, and if the deficiencies significantly affect the conduct of the program, the Regional Administrator, after sufficient notice has been provided to the Regional Director of SBA, shall withdraw the approval of the State program.

(ii) Any State whose program is withdrawn and whose deficiencies have been corrected may later reapply as provided in §21.12(a).

(g) Funds appropriated under section 106 of the Act may be utilized by a State agency authorized to receive such funds in conducting this program.

§21.13 Effect of certification upon authority to enforce applicable standards.

The certification by EPA or a State for SBA Loan purposes in no way constitutes a determination by EPA or the State that the facilities certified (a) will be constructed within the time specified by an applicable standard or (b) will be constructed and installed in accordance with the plans and specifications submitted in the application, will be operated and maintained properly, or will be applied to process wastes which are the same as described in the application. The certification in no way constitutes a waiver by EPA or a State of its authority to take appropriate enforcement action against the owner or operator of such facilities for violations of an applicable standard.

PART 22—CONSOLIDATED RULES OF PRACTICE GOVERNING THE ADMINISTRATIVE ASSESSMENT OF CIVIL PENALTIES AND THE REVOCATION OR SUSPENSION OF PERMITS

Subpart A—General

Sec.
22.01 Scope of these rules.
22.02 Use of number and gender.
22.03 Definitions.
22.04 Powers and duties of the Environmental Appeals Board, the Regional Administrator, the Regional Judicial Officer, and the Presiding Officer; disqualification.
22.05 Filing, service, and form of pleadings and documents.
22.06 Filing and service of rulings, orders and decisions.
22.07 Computation and extension of time.
22.08 Ex parte discussion of proceeding.
22.09 Examination of documents filed.

Subpart B—Parties and Appearances

22.10 Appearances.
22.11 Intervention.
22.12 Consolidation and severance.

Subpart C—Prehearing Procedures

22.13 Issuance of complaint.
22.14 Content and amendment of the complaint.
22.15 Answer to the complaint.
22.16 Motions.
22.17 Default order.
22.18 Informal settlement; consent agreement and order.
22.19 Prehearing conference.
22.20 Accelerated decision; decision to dismiss.

Subpart D—Hearing Procedure

22.21 Scheduling the hearing.
22.22 Evidence.
22.23 Objections and offers of proof.
22.24 Burden of presentation; burden of persuasion.
22.25 Filing the transcript.
22.26 Proposed findings, conclusions, and order.

Subpart E—Initial Decision and Motion to Reopen a Hearing

22.27 Initial decision.
22.28 Motion to reopen a hearing.

Subpart F—Appeals and Administrative Review

22.29 Appeal from or review of interlocutory orders or rulings.
22.30 Appeal from or review of initial decision.

Subpart G—Final Order on Appeal

22.31 Final order on appeal.
22.32 Motion to reconsider a final order.

Subpart H—Supplemental Rules

22.33 Supplemental rules of practice governing the administrative assessment of civil penalties under the Toxic Substances Control Act.
22.34 Supplemental rules of practice governing the administrative assessment of civil penalties under Title II of the Clean Air Act.
22.35 Supplemental rules of practice governing the administrative assessment of civil penalties under the Federal Insecticide, Fungicide, and Rodenticide Act.
22.36 Supplemental rules of practice governing the administrative assessment of civil penalties and the revocation or suspension of permits under the Marine Protection, Research, and Sanctuaries Act.
22.37 Supplemental rules of practice governing the administrative assessment of civil penalties under the Solid Waste Disposal Act.
22.38 Supplemental rules of practice governing the administrative assessment of Class II penalties under the Clean Water Act.
22.39 Supplemental rules of practice governing the administrative assessment of administrative penalties under section 109 of the Comprehensive Environmental Response, Compensation, and Liability Act of 1980, as amended.
22.40 Supplemental rules of practice governing the administrative assessment of administrative penalties under section 325 of the Emergency Planning and Community Right-To-Know Act of 1986 (EPCRA).
22.41 Supplemental rules of practice governing the administrative assessment of civil penalties under Title II of the Toxic Substances Control Act, enacted as section 2 of the Asbestos Hazard Emergency Response Act (AHERA).
22.42 Supplemental rules of practice governing the administrative assessment of civil penalties for violations of compliance orders issued under Part B of the Safe Drinking Water Act.
22.43 Supplemental rules of practice governing the administrative assessment of civil penalties under section 113(d)(1) of the Clean Air Act.

APPENDIX TO PART 22—ADDRESSES OF EPA REGIONAL OFFICES

AUTHORITY: 15 U.S.C. 2615; 42 U.S.C. 7413(d), 7524(c), 7545(d), 7547(d), 7601 and 7607(a); 7 U.S.C. 136(l) and (m); 33 U.S.C. 1319, 1415 and 1418; 42 U.S.C. 6912, 6928 and 6991(e); 42 U.S.C. 9609; 42 U.S.C. 11045.

SOURCE: 45 FR 24363, Apr. 9, 1980, unless otherwise noted.

Subpart A—General

§ 22.01 Scope of these rules.

(a) These rules of practice govern all adjudicatory proceedings for:

(1) The assessment of any civil penalty conducted under section 14(a) of the Federal Insecticide, Fungicide and Rodenticide Act as amended (7 U.S.C. 1361(a));

(2) The assessment of any administrative penalty under sections 113(d)(1), 205(c), 211(d) and 213(d) of the Clean Air Act, as amended (CAA) (42 U.S.C. 7413(d)(1), 7524(c), 7545(d) and 7547(d)).

(3) The assessment of any civil penalty or for the revocation or suspension of any permit conducted under section 105 (a) and (f) of the Marine Protection, Research, and Sanctuaries Act as amended (33 U.S.C. 1415(a));

(4) The issuance of a compliance order or the issuance of a corrective action order, the suspension or revocation of authority to operate pursuant to section 3005(e) of the Solid Waste Disposal Act, or the assessment of any civil penalty under sections 3008, 9006 and 11005 of the Solid Waste Disposal Act, as amended (42 U.S.C. 6928, 6991(e) and 6992(d)), except as provided in 40 CFR parts 24 and 124.

(5) The assessment of any civil penalty conducted under section 16(a) of the Toxic Substances Control Act (15 U.S.C. 2615(a));

(6) The assessment of any Class II penalty under section 309(g) of the Clean Water Act (33 U.S.C. 1319(g));

(7) The assessment of any administrative penalty under section 109 of the Comprehensive Environmental Response, Compensation, and Liability Act of 1980, as amended (42 U.S.C. 9609);

(8) The assessment of any administrative penalty under section 325 of the Emergency Planning and Community Right-To-Know Act of 1986 (EPCRA) (42 U.S.C. 11045).

(9) The assessment of any civil penalty conducted under section 1414(g)(3)(B) of the Safe Drinking Water Act as amended (42 U.S.C. 300g–3(g)(3)(B)).

(b) The Supplemental rules of practice set forth in subpart H establish rules governing those aspects of the proceeding in question which are not covered in subparts A through G, and also specify procedures which supersede any conflicting procedures set forth in those subparts.

(c) Questions arising at any stage of the proceeding which are not addressed in these rules or in the relevant supplementary procedures shall be resolved at the discretion of the Administrator, Regional Administrator, or Presiding Officer, as appropriate.

[45 FR 24363, Apr. 9, 1980, as amended at 52 FR 30673, Aug. 17, 1987; 53 FR 12263, Apr. 13, 1988; 54 FR 12371, Mar. 24, 1989; 54 FR 21176, May 16, 1989; 56 FR 3757, Jan. 30, 1991; 57 FR 4318, Feb. 4, 1992]

§22.02 Use of number and gender.

As used in these rules of practice, words in the singular also include the plural and words in the masculine gender also include the feminine and vice versa, as the case may require.

§22.03 Definitions.

(a) The following definitions apply to part 22:

Act means the particular statute authorizing the institution of the proceeding at issue.

Administrative Law Judge means an Administrative Law Judge appointed under 5 U.S.C. 3105 (see also Pub. L. 95–251, 92 Stat. 183).

Administrator means the Administrator of the U.S. Environmental Protection Agency or his delegate.

Agency means the United States Environmental Protection Agency.

Complainant means any person authorized to issue a complaint on behalf of the Agency to persons alleged to be in violation of the Act. The complainant shall not be a member of the Environmental Appeals Board, the Regional Judicial Officer, or any other person who will participate or advise in the decision.

Complaint means a written communication, alleging one or more violations of specific provisions of the Act, or regulations or a permit promulgated thereunder, issued by the complainant to a person under §§22.13 and 22.14.

Consent Agreement means any written document, signed by the parties, containing stipulations or conclusions of fact or law and a proposed penalty or proposed revocation or suspension acceptable to both complainant and respondent.

Environmental Appeals Board means the Board within the Agency described in §1.25 of this title, located at U.S. Environmental Protection Agency, A–110, 401 M St. SW., Washington, DC 20460.

Final Order means (a) an order issued by the Administrator after an appeal of an initial decision, accelerated decision, decision to dismiss, or default order, disposing of a matter in controversy between the parties, or (b) an initial decision which becomes a final order under §22.27(c).

Hearing means a hearing on the record open to the public and conducted under these rules of practice.

Hearing Clerk means the Hearing Clerk, A–110, U.S. Environmental Protection Agency, 401 M St. SW., Washington, DC 20460.

Initial Decision means the decision issued by the Presiding Officer based upon the record of the proceedings out of which it arises.

Party means any person that participates in a hearing as complainant, respondent, or intervenor.

Permit means a permit issued under section 102 of the Marine Protection, Research, and Sanctuaries Act.

Person includes any individual, partnership, association, corporation, and any trustee, assignee, receiver or legal successor thereof; any organized group of persons whether incorporated or not; and any officer, employee, agent, department, agency or instrumentality of the Federal Government, of any State or local unit of government, or of any foreign government.

Presiding Officer means the Administrative Law Judge designated by the Chief Administrative Law Judge to serve as Presiding Officer, unless otherwise specified by any supplemental rules.

Regional Administrator means the Administrator of any Regional Office of

the Agency or any officer or employee thereof to whom his authority is duly delegated. Where the Regional Administrator has authorized the Regional Judicial Officer to act, the term *Regional Administrator* shall include the Regional Judicial Officer. In a case where the complainant is the Assistant Administrator for Enforcement or his delegate, the term *Regional Administrator* as used in these rules shall mean the Administrator.

Regional Hearing Clerk means an individual duly authorized by the Regional Administrator to serve as hearing clerk for a given region. Correspondence may be addressed to the Regional Hearing Clerk, U.S. Environmental Protection Agency (address of Regional Office—see appendix). In a case where the complainant is the Assistant Administrator for Enforcement or his delegate, the term *Regional Hearing Clerk* as used in these rules shall mean the Hearing Clerk.

Regional Judicial Officer means a person designated by the Regional Administrator under § 22.04(b) to serve as a Regional Judicial Officer.

Respondent means any person proceeded against in the complaint.

(b) Terms defined in the Act and not defined in these rules of practice are used consistent with the meanings given in the Act.

[45 FR 24363, Apr. 9, 1980, as amended at 57 FR 5323, Feb. 13, 1992]

§ 22.04 Powers and duties of the Environmental Appeals Board, the Regional Administrator, the Regional Judicial Officer, and the Presiding Officer; disqualification.

(a) *Environmental Appeals Board.* The Administrator delegates authority under the Act to the Environmental Appeals Board to perform the functions assigned to it in these rules of practice. An appeal or motion under this part directed to the Administrator, rather than to the Environmental Appeals Board, will not be considered. This delegation of authority to the Environmental Appeals Board does not preclude the Environmental Appeals Board from referring any case or motion governed by this part to the Administrator when the Environmental Appeals Board, in its direction, deems it appropriate to do so. When an appeal or motion is referred to the Administrator, all parties shall be so notified and the rules in this part referring to the Environmental Appeals Board shall be interpreted as referring to the Administrator. If a case or motion is referred to the Administrator by the Environmental Appeals Board, the Administrator may consult with any EPA employee concerning the matter, provided such consultation does not violate the ex parte rules set forth in § 22.08.

(b) *Regional Administrator.* The Regional Administrator shall exercise all powers and duties as prescribed or delegated under the Act and these rules of practice.

(1) *Delegation to Regional Judicial Officer.* One or more Regional Judicial Officers may be designated by the Regional Administrator to perform, within the region of their designation, the functions described below. The Regional Administrator may delegate his or her authority to a Regional Judicial Officer to act in a given proceeding. This delegation will not prevent the Regional Judicial Officer from referring any motion or case to the Regional Administrator. The Regional Judicial Officer shall exercise all powers and duties prescribed or delegated under the Act or these rules of practice.

(2) *Qualifications of Regional Judicial Officer.* A Regional Judicial Officer shall be an attorney who is a permanent or temporary employee of the Agency or some other Federal agency and who may perform other duties within the Agency. A Regional Judicial Officer shall not be employed by the Region's Enforcement Division or by the Regional Division directly associated with the type of violation at issue in the proceeding. A Regional Judicial Officer shall not have performed prosecutorial or investigative functions in connection with any hearing in which he serves as a Regional Judicial Officer or with any factually related hearing.

(c) *Presiding Officer.* The Presiding Officer shall conduct a fair and impartial proceeding, assure that the facts are fully elicited, adjudicate all issues, and avoid delay. The Presiding Officer shall have authority to:

(1) Conduct administrative hearings under these rules of practice;

(2) Rule upon motions, requests, and offers of proof, dispose of procedural requests, and issue all necessary orders;

(3) Administer oaths and affirmations and take affidavits;

(4) Examine witnesses and receive documentary or other evidence;

(5) For good cause, upon motion or sua sponte, order a party, or an officer or agent thereof, to produce testimony, documents, or other nonprivileged evidence, and failing the production thereof without good cause being shown, draw adverse inferences against that party;

(6) Admit or exclude evidence;

(7) Hear and decide questions of facts, law, or discretion;

(8) Require parties to attend conferences for the settlement or simplification of the issues, or the expedition of the proceedings;

(9) Issue subpoenas authorized by the Act; and

(10) Do all other acts and take all measures necessary for the maintenance of order and for the efficient, fair and impartial adjudication of issues arising in proceedings governed by these rules.

(d) *Disqualification; withdrawal.* (1) The Administrator, the Regional Administrator, the members of the Environmental Appeals Board, the Regional Judicial Officer, or the Presiding Officer may not perform functions provided for in these rules of practice regarding any matter in which they (i) have a financial interest or (ii) have any relationship with a party or with the subject matter which would make it inappropriate for them to act. Any party may at any time by motion made to the Regional Administrator request that the Regional Judicial Officer be disqualified from the proceeding. Any party may at any time by motion to the Administrator request that the Regional Administrator, a member of the Environmental Appeals Board, or the Presiding Officer be disqualified or request that the Administrator disqualify himself or herself from the proceeding. The Administrator, the Regional Administrator, a member of the Environmental Appeals Board, the Regional Judicial Officer, or the Presiding Officer may at any time withdraw from any proceeding in which they deem themselves disqualified or unable to act for any reason.

(2) If the Administrator, the Regional Administrator, the Regional Judicial Officer, or the Presiding Officer is disqualified or withdraws from the proceeding, a qualified individual who has none of the infirmities listed in paragraph (d)(1) of this section shall be assigned to replace him. Assignment of a replacement for Regional Administrator or for the Regional Judicial Officer shall be made by the Administrator or the Regional Administrator, respectively. The Administrator, should he or she withdraw or disqualify himself or herself, shall assign the Regional Administrator from the Region where the case originated to replace him or her. If that Regional Administrator would be disqualified, the Administrator shall assign a Regional Administrator from another region to replace the Administrator. The Regional Administrator shall assign a new Presiding Officer if the original Presiding Officer was not an Administrative Law Judge. The Chief Administrative Law Judge shall assign a new Presiding Officer from among available Administrative Law Judges if the original Presiding Officer was an Administrative Law Judge.

(3) The Chief Administrative Law Judge, at any stage in the proceeding, may reassign the case to an Administrative Law Judge other than the one originally assigned in the event of the unavailability of the Administrative Law Judge or where reassignment will result in efficiency in the scheduling of hearings and would not prejudice the parties.

[45 FR 24363, Apr. 9, 1980, as amended at 57 FR 5324, Feb. 13, 1992; 57 FR 60129, Dec. 18, 1992]

§22.05 Filing, service, and form of pleadings and documents.

(a) *Filing of pleadings and documents.* (1) Except as otherwise provided, the original and one copy of the complaint, and the original of the answer and of all other documents served in the proceeding shall be filed with the Regional Hearing Clerk.

(2) A certificate of service shall accompany each document filed or

served. Except as otherwise provided, a party filing documents with the Regional Hearing Clerk, after the filing of the answer, shall serve copies thereof upon all other parties and the Presiding Officer. The Presiding Officer shall maintain a duplicate file during the course of the proceeding.

(3) When the Presiding Officer corresponds directly with the parties, the original of the correspondence shall be sent to the Regional Hearing Clerk, a copy shall be maintained by the Presiding Officer in the duplicate file, and a copy shall be sent to all parties. Parties who correspond directly with the Presiding Officer shall in addition to serving all other parties send a copy of all such correspondence to the Regional Hearing Clerk. A certificate of service shall accompany each document served under this subsection.

(b) *Service of pleadings and documents*—(1) *Service of complaint.* (i) Service of a copy of the signed original of the complaint, together with a copy of these rules of practice, may be made personally or by certified mail, return receipt requested, on the respondent (or his representative).

(ii) Service upon a domestic or foreign corporation or upon a partnership or other unincorporated association which is subject to suit under a common name shall be made by personal service or certified mail, as prescribed by paragraph (b)(1)(i) of this section, directed to an officer, partner, a managing or general agent, or to any other person authorized by appointment or by Federal or State law to receive service of process.

(iii) Service upon an officer or agency of the United States shall be made by delivering a copy of the complaint to the officer or agency, or in any manner prescribed for service by applicable regulations. If the agency is a corporation, the complaint shall be served as prescribed in paragraph (b)(1)(ii) of this section.

(iv) Service upon a State or local unit of government, or a State or local officer, agency, department, corporation or other instrumentality shall be made by serving a copy of the complaint in the manner prescribed by the law of the State for the service of process on any such persons, or:

(A) If upon a State or local unit of government, or a State or local department, agency, corporation or other instrumentality, by delivering a copy of the complaint to the chief executive officer thereof;

(B) If upon a State or local officer by delivering a copy to such officer.

(v) Proof of service of the complaint shall be made by affidavit of the person making personal service, or by properly executed return receipt. Such proof of service shall be filed with the complaint immediately upon completion of service.

(2) *Service of documents other than complaint, rulings, orders, and decisions.* All documents other than the complaint, rulings, orders, and decisions, may be served personally or by certified or first class mail.

(c) *Form of pleadings and documents.* (1) Except as provided herein, or by order of the Presiding Officer or of the Environmental Appeals Board, there are no specific requirements as to the form of documents.

(2) The first page of every pleading, letter, or other document shall contain a caption identifying the respondent and the docket number which is exhibited on the complaint.

(3) The original of any pleading, letter or other document (other than exhibits) shall be signed by the party filing or by his counsel or other representative. The signature constitutes a representation by the signer that he has read the pleading, letter or other document, that to the best of his knowledge, information and belief, the statements made therein are true, and that it is not interposed for delay.

(4) The initial document filed by any person shall contain his name, address and telephone number. Any changes in this information shall be communicated promptly to the Regional Hearing Clerk, Presiding Officer, and all parties to the proceeding. A party who fails to furnish such information and any changes thereto shall be deemed to have waived his right to notice and service under these rules.

(5) The Environmental Appeals Board, the Regional Administrator, the Presiding Officer, or the Regional Hearing Clerk may refuse to file any document which does not comply with

this paragraph. Written notice of such refusal, stating the reasons therefor, shall be promptly given to the person submitting the document. Such person may amend and resubmit any document refused for filing upon motion granted by the Environmental Appeals Board, the Regional Administrator, or the Presiding Officer, as appropriate.

[45 FR 24363, Apr. 9, 1980, as amended at 57 FR 5324, Feb. 13, 1992]

§22.06 Filing and service of rulings, orders, and decisions.

All rulings, orders, decisions, and other documents issued by the Regional Administrator, Regional Judicial Officer, or Presiding Officer, as appropriate, shall be filed with the Regional Hearing Clerk. All such documents issued by the Environmental Appeals Board shall be filed with the Clerk of the Environmental Appeals Board. Copies of such rulings, orders, decisions, or other documents shall be served personally, or by certified mail, return receipt requested, upon all parties by the Environmental Appeals Board, the Regional Administrator, the Regional Judicial Officer, or the Presiding Officer, as appropriate.

[45 FR 24363, Apr. 9, 1980, as amended at 57 FR 5324, Feb. 13, 1992]

§22.07 Computation and extension of time.

(a) *Computation.* In computing any period of time prescribed or allowed in these rules of practice, except as otherwise provided, the day of the event from which the designated period begins to run shall not be included. Saturdays, Sundays, and Federal legal holidays shall be included. When a stated time expires on a Saturday, Sunday or legal holiday, the stated time period shall be extended to include the next business day.

(b) *Extensions of time.* The Environmental Appeals Board, the Regional Administrator, or the Presiding Officer, as appropriate, may grant an extension of time for the filing of any pleading, document, or motion (1) upon timely motion of a party to the proceeding, for good cause shown, and after consideration of prejudice to other parties, or (2) upon its or his own motion. Such a motion by a party may only be made after notice to all other parties, unless the movant can show good cause why serving notice is impracticable. The motion shall be filed in advance of the date on which the pleading, document or motion is due to be filed, unless the failure of a party to make timely motion for extension of time was the result of excusable neglect.

(c) *Service by mail.* Service of the complaint is complete when the return receipt is signed. Service of all other pleadings and documents is complete upon mailing. Where a pleading or document is served by mail, five (5) days shall be added to the time allowed by these rules for the filing of a responsive pleading or document.

[45 FR 24363, Apr. 9, 1980, as amended at 57 FR 5324, Feb. 13, 1992]

§22.08 Ex parte discussion of proceeding.

At no time after the issuance of the complaint shall the Administrator, the members of the Environmental Appeals Board, the Regional Administrator, the Regional Judicial Officer, the Presiding Officer, or any other person who is likely to advise these officials in the decision on the case, discuss ex parte the merits of the proceeding with any interested person outside the Agency, with any Agency staff member who performs a prosecutorial or investigative function in such proceeding or a factually related proceeding, or with any representative of such person. Any ex parte memorandum or other communication addressed to the Administrator, the Regional Administrator, the Environmental Appeals Board, the Regional Judicial Officer, or the Presiding Officer during the pendency of the proceeding and relating to the merits thereof, by or on behalf of any party shall be regarded as argument made in the proceeding and shall be served upon all other parties. The other parties shall be given an opportunity to reply to such memorandum or communication.

[45 FR 24363, Apr. 9, 1980, as amended at 57 FR 5325, Feb. 13, 1992]

§ 22.09 Examination of documents filed.

(a) Subject to the provisions of law restricting the public disclosure of confidential information, any person may, during Agency business hours, inspect and copy any document filed in any proceeding. Such documents shall be made available by the Regional Hearing Clerk, the Hearing Clerk, or the Environmental Appeals Board, as appropriate.

(b) The cost of duplicating documents filed in any proceeding shall be borne by the person seeking copies of such documents. The Agency may waive this cost in appropriate cases.

[45 FR 24363, Apr. 9, 1980, as amended at 57 FR 5325, Feb. 13, 1992]

Subpart B—Parties and Appearances

§ 22.10 Appearances.

Any party may appear in person or by counsel or other representative. A partner may appear on behalf of a partnership and an officer may appear on behalf of a corporation. Persons who appear as counsel or other representative must conform to the standards of conduct and ethics required of practitioners before the courts of the United States.

§ 22.11 Intervention.

(a) *Motion.* A motion for leave to intervene in any proceeding conducted under these rules of practice must set forth the grounds for the proposed intervention, the position and interest of the movant and the likely impact that intervention will have on the expeditious progress of the proceeding. Any person already a party to the proceeding may file an answer to a motion to intervene, making specific reference to the factors set forth in the foregoing sentence and paragraph (c) of this section, within ten (10) days after service of the motion for leave to intervene.

(b) *When filed.* A motion for leave to intervene in a proceeding must ordinarily be filed before the first prehearing conference or, in the absence of a prehearing conference, before the initiation of correspondence under § 22.19(e), or if there is no such correspondence, prior to the setting of a time and place for a hearing. Any motion filed after that time must include, in addition to the information set forth in paragraph (a) of this section, a statement of good cause for the failure to file in a timely manner. The intervenor shall be bound by any agreements, arrangements and other matters previously made in the proceeding.

(c) *Disposition.* Leave to intervene may be granted only if the movant demonstrates that (1) his presence in the proceeding would not unduly prolong or otherwise prejudice the adjudication of the rights of the original parties; (2) the movant will be adversely affected by a final order; and (3) the interests of the movant are not being adequately represented by the original parties. The intervenor shall become a full party to the proceeding upon the granting of leave to intervene.

(d) *Amicus curiae.* The motion shall identify the interest of the applicant and shall state the reasons why the proposed amicus brief is desirable. If the motion is granted, the Presiding Officer or Administrator shall issue an order setting the time for filing such brief. If the motion is granted, the Presiding Officer or the Environmental Appeals Board shall issue an order setting the time for filing such brief.

[45 FR 24363, Apr. 9, 1980, as amended at 57 FR 5325, Feb. 13, 1992]

§ 22.12 Consolidation and severance.

(a) *Consolidation.* The Presiding Officer may, by motion or sua sponte, consolidate any or all matters at issue in two or more proceedings docketed under these rules of practice where (1) there exists common parties or common questions of fact or law, (2) consolidation would expedite and simplify consideration of the issues, and (3) consolidation would not adversely affect the rights of parties engaged in otherwise separate proceedings.

(b) *Severance.* The Presiding Officer may, by motion or sua sponte, for good cause shown order any proceedings severed with respect to any or all parties or issues.

Subpart C—Prehearing Procedures

§22.13 Issuance of complaint.

If the complainant has reason to believe that a person has violated any provision of the Act, or regulations promulgated or a permit issued under the Act, he may institute a proceeding for the assessment of a civil penalty by issuing a complaint under the Act and these rules of practice. If the complainant has reason to believe that

(a) A permittee violated any term or condition of the permit, or

(b) A permittee misrepresented or inaccurately described any material fact in the permit application or failed to disclose all relevant facts in the permit application, or

(c) Other good cause exists for such action, he may institute a proceeding for the revocation or suspension of a permit by issuing a complaint under the Act and these rules of practice. A complaint may be for the suspension or revocation of a permit in addition to the assessment of a civil penalty.

§22.14 Content and amendment of the complaint.

(a) *Complaint for the assessment of a civil penalty*. Each complaint for the assessment of a civil penalty shall include:

(1) A statement reciting the section(s) of the Act authorizing the issuance of the complaint;

(2) Specific reference to each provision of the Act and implementing regulations which respondent is alleged to have violated;

(3) A concise statement of the factual basis for alleging the violation;

(4) The amount of the civil penalty which is proposed to be assessed;

(5) A statement explaining the reasoning behind the proposed penalty;

(6) Notice of respondent's right to request a hearing on any material fact contained in the complaint, or on the appropriateness of the amount of the proposed penalty.

A copy of these rules of practice shall accompany each complaint served.

(b) *Complaint for the revocation or suspension of a permit*. Each complaint for the revocation or suspension of a permit shall include:

(1) A statement reciting the section(s) of the Act, regulations, and/or permit authorizing the issuance of the complaint;

(2) Specific reference to each term or condition of the permit which the respondent is alleged to have violated, to each alleged inaccuracy or misrepresentation in respondent's permit application, to each fact which the respondent allegedly failed to disclose in his permit application, or to other reasons which form the basis for the complaint;

(3) A concise statement of the factual basis for such allegations;

(4) A request for an order to either revoke or suspend the permit and a statement of the terms and conditions of any proposed partial suspension or revocation;

(5) A statement indicating the basis for recommending the revocation, rather than the suspension, of the permit, or vice versa, as the case may be;

(6) Notice of the respondent's right to request a hearing on any material fact contained in the complaint, or on the appropriateness of the proposed revocation or suspension.

A copy of these rules of practice shall accompany each complaint served.

(c) *Derivation of proposed civil penalty*. The dollar amount of the proposed civil penalty shall be determined in accordance with any criteria set forth in the Act relating to the proper amount of a civil penalty and with any civil penalty guidelines issued under the Act.

(d) *Amendment of the complaint*. The complainant may amend the complaint once as a matter of right at any time before the answer is filed. Otherwise the complainant may amend the complaint only upon motion granted by the Presiding Officer or Regional Administrator, as appropriate. Respondent shall have twenty (20) additional days from the date of service of the amended complaint to file his answer.

(e) *Withdrawal of the complaint*. The complainant may withdraw the complaint, or any part thereof, without prejudice one time before the answer has been filed. After one withdrawal before the filing of an answer, or after the filing of an answer, the complainant may withdraw the complaint, or any part thereof, without prejudice,

only upon motion granted by the Presiding Officer or Regional Administrator, as appropriate.

§ 22.15 Answer to the complaint.

(a) *General.* Where respondent: (1) Contests any material fact upon which the complaint is based; (2) contends that the amount of the penalty proposed in the complaint or the proposed revocation or suspension, as the case may be, is inappropriate; or (3) contends that he is entitled to judgment as a matter of law, he shall file a written answer to the complaint with the Regional Hearing Clerk. Any such answer to the complaint must be filed with the Regional Hearing Clerk within twenty (20) days after service of the complaint.

(b) *Contents of the answer.* The answer shall clearly and directly admit, deny or explain each of the factual allegations contained in the complaint with regard to which respondent has any knowledge. Where respondent has no knowledge of a particular factual allegation and so states, the allegation is deemed denied. The answer shall also state (1) the circumstances or arguments which are alleged to constitute the grounds of defense, (2) the facts which respondent intends to place at issue, and (3) whether a hearing is requested.

(c) *Request for hearing.* A hearing upon the issues raised by the complaint and answer shall be held upon request of respondent in the answer. In addition, a hearing may be held at the discretion of the Presiding Officer, sua sponte, if issues appropriate for adjudication are raised in the answer.

(d) *Failure to admit, deny, or explain.* Failure of respondent to admit, deny, or explain any material factual allegation contained in the complaint constitutes an admission of the allegation.

(e) *Amendment of the answer.* The respondent may amend the answer to the complaint upon motion granted by the Presiding Officer.

§ 22.16 Motions.

(a) *General.* All motions, except those made orally on the record during a hearing, shall (1) be in writing; (2) state the grounds therefor with particularity; (3) set forth the relief or order sought; and (4) be accompanied by any affidavit, certificate, other evidence, or legal memorandum relied upon. Such motions shall be served as provided by § 22.05(b)(2).

(b) *Response to motions.* A party's response to any written motion must be filed within ten (10) days after service of such motion, unless additional time is allowed for such response. The response shall be accompanied by any affidavit, certificate, other evidence, or legal memorandum relied upon. If no response is filed within the designated period, the parties may be deemed to have waived any objection to the granting of the motion. The Presiding Officer, the Regional Administrator, or the Environmental Appeals Board, as appropriate, may set a shorter time for response, or make such orders concerning the disposition of motions as they deem appropriate.

(c) *Decision.* Except as provided in § 22.04(d)(1) and § 22.28(a), the Regional Administrator shall rule on all motions filed or made before an answer to the complaint is filed. The Environmental Appeals Board shall rule on all motions filed or made after service of the initial decision upon the parties. The Administrator shall rule on all motions filed or made after service of the initial decision upon the parties. The Presiding Officer shall rule on all other motions. Oral argument on motions will be permitted where the Presiding Officer, the Regional Administrator, or the Environmental Appeals Board considers it necessary or desirable.

[45 FR 24363, Apr. 9, 1980, as amended at 57 FR 5325, Feb. 13, 1992; 57 FR 60129, Dec. 18, 1992]

§ 22.17 Default order.

(a) *Default.* A party may be found to be in default (1) after motion, upon failure to file a timely answer to the complaint; (2) after motion or sua sponte, upon failure to comply with a prehearing or hearing order of the Presiding Officer; or (3) after motion or sua sponte, upon failure to appear at a conference or hearing without good cause being shown. No finding of default on the basis of a failure to appear at a hearing shall be made against the

respondent unless the complainant presents sufficient evidence to the Presiding Officer to establish a prima facie case against the respondent. Any motion for a default order shall include a proposed default order and shall be served upon all parties. The alleged defaulting party shall have twenty (20) days from service to reply to the motion. Default by respondent constitutes, for purposes of the pending action only, an admission of all facts alleged in the complaint and a waiver of respondent's right to a hearing on such factual allegations. If the complaint is for the assessment of a civil penalty, the penalty proposed in the complaint shall become due and payable by respondent without further proceedings sixty (60) days after a final order issued upon default. If the complaint is for the revocation or suspension of a permit, the conditions of revocation or suspension proposed in the complaint shall become effective without further proceedings on the date designated by the Administrator in his final order issued upon default. Default by the complainant shall result in the dismissal of the complaint with prejudice.

(b) *Procedures upon default.* When Regional Administrator or Presiding Officer finds a default has occurred, he shall issue a default order against the defaulting party. This order shall constitute the initial decision, and shall be filed with the Regional Hearing Clerk.

(c) *Contents of a default order.* A default order shall include findings of fact showing the grounds for the order, conclusions regarding all material issues of law or discretion, and the penalty which is recommended to be assessed or the terms and conditions of permit revocation or suspension, as appropriate.

(d) For good cause shown the Regional Administrator or the Presiding Officer, as appropriate, may set aside a default order.

§22.18 Informal settlement; consent agreement and order.

(a) *Settlement policy.* The Agency encourages settlement of a proceeding at any time if the settlement is consistent with the provisions and objectives of the Act and applicable regulations. The respondent may confer with complainant concerning settlement whether or not the respondent requests a hearing. Settlement conferences shall not affect the respondent's obligation to file a timely answer under §22.16.

(b) *Consent agreement.* The parties shall forward a written consent agreement and a proposed consent order to the Regional Administrator whenever settlement or compromise is proposed. The consent agreement shall state that, for the purpose of this proceeding, respondent (1) admits the jurisdictional allegations of the complaint; (2) admits the facts stipulated in the consent agreement or neither admits nor denies specific factual allegations contained in the complaint; and (3) consents to the assessment of a stated civil penalty or to the stated permit revocation or suspension, as the case may be. The consent agreement shall include any and all terms of the agreement, and shall be signed by all parties or their counsel or representatives.

(c) *Consent order.* No settlement or consent agreement shall dispose of any proceeding under these rules of practice without a consent order from the Regional Administrator. In preparing such an order, the Regional Administrator may require that the parties to the settlement appear before him to answer inquiries relating to the consent agreement or order.

§22.19 Prehearing conference.

(a) *Purpose of prehearing conference.* Unless a conference appears unnecessary, the Presiding Officer, at any time before the hearing begins, shall direct the parties and their counsel or other representatives to appear at a conference before him to consider:

(1) The settlement of the case;

(2) The simplification of issues and stipulation of facts not in dispute;

(3) The necessity or desirability of amendments to pleadings;

(4) The exchange of exhibits, documents, prepared testimony, and admissions or stipulations of fact which will avoid unnecessary proof;

(5) The limitation of the number of expert or other witnesses;

(6) Setting a time and place for the hearing; and

(7) Any other matters which may expedite the disposition of the proceeding.

(b) *Exchange of witness lists and documents.* Unless otherwise ordered by the Presiding Officer, each party at the prehearing conference shall make available to all other parties (1) The names of the expert and other witnesses he intends to call, together with a brief narrative summary of their expected testimony, and (2) copies of all documents and exhibits which each party intends to introduce into evidence. Documents and exhibits shall be marked for identification as ordered by the Presiding Officer. Documents that have not been exchanged and witnesses whose names have not been exchanged shall not be introduced into evidence or allowed to testify without permission of the Presiding Officer. The Presiding Officer shall allow the parties reasonable opportunity to review new evidence.

(c) *Record of the prehearing conference.* No transcript of a prehearing conference relating to settlement shall be made. With respect to other prehearing conferences, no transcript of any prehearing conferences shall be made unless ordered by the Presiding Officer upon motion of a party or sua sponte. The Presiding Officer shall prepare and file for the record a written summary of the action taken at the conference. The summary shall incorporate any written stipulations or agreements of the parties and all rulings and appropriate orders containing directions to the parties.

(d) *Location of prehearing conference.* The prehearing conference shall be held in the county where the respondent resides or conducts the business which the hearing concerns, in the city in which the relevant Environmental Protection Agency Regional Office is located, or in Washington, DC, unless (1) the Presiding Officer determines that there is good cause to hold it at another location in a region or by telephone, or (2) the Supplemental rules of practice provide otherwise.

(e) *Unavailability of a prehearing conference.* If a prehearing conference is unnecessary or impracticable, the Presiding Officer, on motion or sua sponte, may direct the parties to correspond with him to accomplish any of the objectives set forth in this section.

(f) *Other discovery.* (1) Except as provided by paragraph (b) of this section, further discovery, under this section, shall be permitted only upon determination by the Presiding Officer:

(i) That such discovery will not in any way unreasonably delay the proceeding;

(ii) That the information to be obtained is not otherwise obtainable; and

(iii) That such information has significant probative value.

(2) The Presiding Officer shall order depositions upon oral questions only upon a showing of good cause and upon a finding that:

(i) The information sought cannot be obtained by alternative methods; or

(ii) There is a substantial reason to believe that relevant and probative evidence may otherwise not be preserved for presentation by a witness at the hearing.

(3) Any party to the proceeding desiring an order of discovery shall make a motion therefor. Such a motion shall set forth;

(i) The circumstances warranting the taking of the discovery;

(ii) The nature of the information expected to be discovered; and

(iii) The proposed time and place where it will be taken. If the Presiding Officer determines that the motion should be granted, he shall issue an order for the taking of such discovery together with the conditions and terms thereof.

(4) When the information sought to be obtained is within the control of one of the parties, failure to comply with an order issued pursuant to this paragraph may lead to (i) the inference that the information to be discovered would be adverse to the party from whom the information was sought, or (ii) the issuance of a default order under § 22.17(a).

§ 22.20 Accelerated decision; decision to dismiss.

(a) *General.* The Presiding Officer, upon motion of any party or sua sponte, may at any time render an accelerated decision in favor of the complainant or the respondent as to all or any part of the proceeding, without

further hearing or upon such limited additional evidence, such as affidavits, as he may require, if no genuine issue of material fact exists and a party is entitled to judgment as a matter of law, as to all or any part of the proceeding. In addition, the Presiding Officer, upon motion of the respondent, may at any time dismiss an action without further hearing or upon such limited additional evidence as he requires, on the basis of failure to establish a prima facie case or other grounds which show no right to relief on the part of the complainant.

(b) *Effect.* (1) If an accelerated decision or a decision to dismiss is issued as to all the issues and claims in the proceeding, the decision constitutes an initial decision of the Presiding Officer, and shall be filed with the Regional Hearing Clerk.

(2) If an accelerated decision or a decision to dismiss is rendered on less than all issues or claims in the proceeding, the Presiding Officer shall determine what material facts exist without substantial controversy and what material facts remain controverted in good faith. He shall thereupon issue an interlocutory order specifying the facts which appear substantially uncontroverted, and the issues and claims upon which the hearing will proceed.

Subpart D—Hearing Procedure

§22.21 Scheduling the hearing.

(a) When an answer is filed, the Regional Hearing Clerk shall forward the complaint, the answer, and any other documents filed thus far in the proceeding to the Chief Administrative Law Judge who shall assign himself or another Administrative Law Judge as Presiding Officer, unless otherwise provided in the Supplemental rules of practice. The Presiding Officer shall then obtain the case file from the Chief Administrative Law Judge and notify the parties of his assignment.

(b) *Notice of hearing.* If the respondent requests a hearing in his answer, or one is ordered by the Presiding Officer under §22.15(c), the Presiding Officer shall serve upon the parties a notice of hearing setting forth a time and place for the hearing. The Presiding Officer may issue the notice of hearing at any appropriate time, but not later than twenty (20) days prior to the date set for the hearing.

(c) *Postponement of hearing.* No request for postponement of a hearing shall be granted except upon motion and for good cause shown.

(d) *Location of the hearing.* The location of the hearing shall be determined in accordance with the method for determining the location of a prehearing conference under §22.19(d).

§22.22 Evidence.

(a) *General.* The Presiding Officer shall admit all evidence which is not irrelevant, immaterial, unduly repetitious, or otherwise unreliable or of little probative value, except that evidence relating to settlement which would be excluded in the federal courts under Rule 408 of the Federal Rules of Evidence is not admissible. In the presentation, admission, disposition, and use of evidence, the Presiding Officer shall preserve the confidentiality of trade secrets and other commercial and financial information. The confidential or trade secret status of any information shall not, however, preclude its being introduced into evidence. The Presiding Officer may make such orders as may be necessary to consider such evidence *in camera,* including the preparation of a supplemental initial decision to address questions of law, fact, or discretion which arise out of that portion of the evidence which is confidential or which includes trade secrets.

(b) *Examination of witnesses.* Witnesses shall be examined orally, under oath or affirmation, except as otherwise provided in these rules of practice or by the Presiding Officer. Parties shall have the right to cross-examine a witness who appears at the hearing provided that such cross-examination is not unduly repetitious.

(c) *Verified statements.* The Presiding Officer may admit an insert into the record as evidence, in lieu of oral testimony, statements of fact or opinion prepared by a witness. The admissibility of the evidence contained in the statement shall be subject to the same rules as if the testimony were produced under oral examination. Before any

such statement is read or admitted into evidence, the witness shall deliver a copy of the statement to the Presiding Officer, the reporter, and opposing counsel. The witness presenting the statement shall swear to or affirm the statement and shall be subject to appropriate oral cross-examination upon the contents thereof.

(d) *Admission of affidavits where the witness is unavailable.* The Presiding Officer may admit into evidence affidavits of witnesses who are unavailable. The term ''unavailable'' shall have the meaning accorded to it by Rule 804(a) of the Federal Rules of Evidence.

(e) *Exhibits.* Where practicable, an original and one copy of each exhibit shall be filed with the Presiding Officer for the record and a copy shall be furnished to each party. A true copy of any exhibit may be substituted for the original.

(f) *Official notice.* Official notice may be taken of any matter judicially noticed in the Federal courts and of other facts within the specialized knowledge and experience of the Agency. Opposing parties shall be given adequate opportunity to show that such facts are erroneously noticed.

§ 22.23 Objections and offers of proof.

(a) *Objection.* Any objection concerning the conduct of the hearing may be stated orally or in writing during the hearing. The party raising the objection must supply a short statement of its grounds. The ruling by the Presiding Officer on any objection and the reasons given for it shall be part of the record. An exception to each objection overruled shall be automatic and is not waived by further participation in the hearing.

(b) *Offer of proof.* Whenever evidence is excluded from the record, the party offering the evidence may make an offer of proof, which shall be included in the record. The offer of proof for excluded oral testimony shall consist of a brief statement describing the nature of the evidence excluded. The offer of proof for excluded documents or exhibits shall consist of the insertion in the record of the documents or exhibits excluded. Where the Environmental Appeals Board decides that the ruling of the Presiding Officer in excluding the evidence was both erroneous and prejudicial, the hearing may be reopened to permit the taking of such evidence.

[45 FR 24363, Apr. 9, 1980, as amended at 57 FR 5325, Feb. 13, 1992]

§ 22.24 Burden of presentation; burden of persuasion.

The complainant has the burden of going forward with and of proving that the violation occurred as set forth in the complaint and that the proposed civil penalty, revocation, or suspension, as the case may be, is appropriate. Following the establishment of a prima facie case, respondent shall have the burden of presenting and of going forward with any defense to the allegations set forth in the complaint. Each matter of controversy shall be determined by the Presiding Officer upon a preponderance of the evidence.

§ 22.25 Filing the transcript.

The hearing shall be transcribed verbatim. Promptly following the taking of the last evidence, the reporter shall transmit to the Regional Hearing Clerk the original and as many copies of the transcript of testimony as are called for in the reporter's contract with the Agency, and also shall transmit to the Presiding Officer a copy of the transcript. A certificate of service shall accompany each copy of the transcript. The Regional Hearing Clerk shall notify all parties of the availability of the transcript and shall furnish the parties with a copy of the transcript upon payment of the cost of reproduction, unless a party can show that the cost is unduly burdensome. Any person not a party to the proceeding may receive a copy of the transcript upon payment of the reproduction fee, except for those parts of the transcript order to be kept confidential by the Presiding Officer.

§ 22.26 Proposed findings, conclusions, and order.

Within twenty (20) days after the parties are notified of the availability of the transcript, or within such longer time as may be fixed by the Presiding Officer, any party may submit for the consideration of the Presiding Officer, proposed findings of fact, conclusions of law, and a proposed order, together

with briefs in support thereof. The Presiding Officer shall set a time by which reply briefs must be submitted. All submissions shall be in writing, shall be served upon all parties, and shall contain adequate references to the record and authorities relied on.

Subpart E—Initial Decision and Motion To Reopen a Hearing

§22.27 Initial decision.

(a) *Filing and contents.* The Presiding Officer shall issue and file with the Regional Hearing Clerk his initial decision as soon as practicable after the period for filing reply briefs under §22.26 has expired. The Presiding Officer shall retain a copy of the complaint in the duplicate file. The initial decision shall contain his findings of fact, conclusions regarding all material issues of law or discretion, as well as reasons therefor, a recommended civil penalty assessment, if appropriate, and a proposed final order. Upon receipt of an initial decision, the Regional Hearing Clerk shall forward a copy to all parties, and shall send the original, along with the record of the proceeding, to the Hearing Clerk. The Hearing Clerk shall forward a copy of the initial decision to the Environmental Appeals Board.

(b) *Amount of civil penalty*. If the Presiding Officer determines that a violation has occurred, the Presiding Officer shall determine the dollar amount of the recommended civil penalty to be assessed in the initial decision in accordance with any criteria set forth in the Act relating to the proper amount of a civil penalty, and must consider any civil penalty guidelines issued under the Act. If the Presiding Officer decides to assess a penalty different in amount from the penalty recommended to be assessed in the complaint, the Presiding Officer shall set forth in the initial decision the specific reasons for the increase or decrease. The Presiding Officer shall not raise a penalty from that recommended to be assessed in the complaint if the respondent has defaulted.

(c) *Effect of initial decision*. The initial decision of the Presiding Officer shall become the final order of the Environmental Appeals Board within forty-five (45) days after its service upon the parties and without further proceedings unless (1) an appeal to the Environmental Appeals Board is taken from it by a party to the proceedings, or (2) the Environmental Appeals Board elects, sua sponte, to review the initial decision.

[45 FR 24363, Apr. 9, 1980, as amended at 57 FR 5325, Feb. 13, 1992]

§22.28 Motion to reopen a hearing.

(a) *Filing and content.* A motion to reopen a hearing to take further evidence must be made no later than twenty (20) days after service of the initial decision on the parties and shall (1) state the specific grounds upon which relief is sought, (2) state briefly the nature and purpose of the evidence to be adduced, (3) show that such evidence is not cumulative, and (4) show good cause why such evidence was not adduced at the hearing. The motion shall be made to the Presiding Officer and filed with the Regional Hearing Clerk.

(b) *Disposition of motion to reopen a hearing.* Within ten (10) days following the service of a motion to reopen a hearing, any other party to the proceeding may file with the Regional Hearing Clerk and serve on all other parties an answer thereto. The Presiding Officer shall announce his intent to grant or deny such motion as soon as practicable thereafter. The conduct of any proceeding which may be required as a result of the granting of any motion allowed in this section shall be governed by the provisions of the applicable sections of these rules. The filing of a motion to reopen a hearing shall automatically stay the running of all time periods specified under these Rules until such time as the motion is denied or the reopened hearing is concluded.

Subpart F—Appeals and Administrative Review

§22.29 Appeal from or review of interlocutory orders or rulings.

(a) *Request for interlocutory appeal.* Except as provided in this section, appeals to the Environmental Appeals Board shall obtain as a matter of right

only from a default order, an accelerated decision or decision to dismiss issued under § 22.20(b)(1), or an initial decision rendered after an evidentiary hearing. Appeals from other orders or rulings shall lie only if the Presiding Officer or Regional Administrator, as appropriate, upon motion of a party, certifies such orders or rulings to the Environmental Appeals Board on appeal. Requests for such certification shall be filed in writing within six (6) days of notice of the ruling or service of the order, and shall state briefly the grounds to be relied upon on appeal.

(b) *Availability of interlocutory appeal.* The Presiding Officer may certify any ruling for appeal to the Environmental Appeals Board when (1) the order or ruling involves an important question of law or policy concerning which there is substantial grounds for difference of opinion, and (2) either (i) an immediate appeal from the order or ruling will materially advance the ultimate termination of the proceeding, or (ii) review after the final order is issued will be inadequate or ineffective.

(c) *Decision.* If the Environmental Appeals Board determines that certification was improvidently granted, or if the Environmental Appeals Board takes no action within thirty (30) days of the certification, the appeal is dismissed. When the Presiding Officer declines to certify an order or ruling to the Environmental Appeals Board on interlocutory appeal, it may be reviewed by the Environmental Appeals Board only upon appeal from the initial decision, except when the Environmental Appeals Board determines, upon motion of a party and in exceptional circumstances, that to delay review would be contrary to the public interest. Such motion shall be made within six (6) days of service of an order of the Presiding Officer refusing to certify a ruling for interlocutory appeal to the Environmental Appeals Board. Ordinarily, the interlocutory appeal will be decided on the basis of the submissions made by the Presiding Officer. The Environmental Appeals Board may, however, allow further briefs and oral argument.

(d) *Stay of proceedings.* The Presiding Officer may stay the proceedings pending a decision by the Environmental Appeals Board upon an order or ruling certified by the Presiding Officer for an interlocutory appeal. Proceedings will not be stayed except in extraordinary circumstances. Where the Presiding Officer grants a stay of more than thirty (30) days, such stay must be separately approved by the Environmental Appeals Board.

[45 FR 24363, Apr. 9, 1980, as amended at 57 FR 5325, Feb. 13, 1992]

§ 22.30 Appeal from or review of initial decision.

(a) *Notice of appeal.* (1) Any party may appeal an adverse ruling or order of the Presiding Officer by filing a notice of appeal and an accompanying appellate brief with the Environmental Appeals Board and upon all other parties and amicus curiae within twenty (20) days after the initial decision is served upon the parties. The notice of appeal shall set forth alternative findings of fact, alternative conclusions regarding issues of law or discretion, and a proposed order together with relevant references to the record and the initial decision. The appellant's brief shall contain a statement of the issues presented for review, a statement of the nature of the case and the facts relevant to the issues presented for review, argument on the issues presented, and a short conclusion stating the precise relief sought, together with appropriate references to the record.

(2) Within fifteen (15) days of the service of notices of appeal and briefs under paragraph (a)(1) of this section, any other party or amicus curiae may file and serve with the Environmental Appeals Board a reply brief responding to argument raised by the appellant, together with references to the relevant portions of the record, initial decision, or opposing brief. Reply briefs shall be limited to the scope of the appeal brief. Further briefs shall be filed only with the permission of the Environmental Appeals Board.

(b) *Sua sponte review by the Environmental Appeals Board.* Whenever the Environmental Appeals Board determines sua sponte to review an initial decision, the Environmental Appeals Board shall serve notice of such intention on the parties within forty-five (45) days after the initial decision is served upon

the parties. The notice shall include a statement of issues to be briefed by the parties and a time schedule for the service and filing of briefs.

(c) *Scope of appeal or review.* If the Environmental Appeals Board determines that issues raised, but not appealed by the parties, should be argued, it shall give counsel for the parties reasonable written notice of such determination to permit preparation of adequate argument. Nothing herein shall prohibit the Environmental Appeals Board from remanding the case to the Presiding Officer for further proceedings.

(d) *Argument before the Environmental Appeals Board.* The Environmental Appeals Board may, upon request of a party or sua sponte, assign a time and place for oral argument after giving consideration to the convenience of the parties.

[45 FR 24363, Apr. 9, 1980, as amended at 57 FR 5325, Feb. 13, 1992]

Subpart G—Final Order on Appeal

§22.31 Final order on appeal.

(a) *Contents of the final order.* When an appeal has been taken or the Environmental Appeals Board issues a notice of intent to conduct a review sua sponte, the Environmental Appeals Board shall issue a final order as soon as practicable after the filing of all appellate briefs or oral argument, whichever is later. The Environmental Appeals Board shall adopt, modify, or set aside the findings and conclusions contained in the decision or order being reviewed and shall set forth in the final order the reasons for its actions. The Environmental Appeals Board may, in its discretion, increase or decrease the assessed penalty from the amount recommended to be assessed in the decision or order being reviewed, except that if the order being reviewed is a default order, the Environmental Appeals Board may not increase the amount of the penalty.

(b) *Payment of a civil penalty.* The respondent shall pay the full amount of the civil penalty assessed in the final order within sixty (60) days after receipt of the final order unless otherwise agreed by the parties. Payment shall be made by forwarding to the Regional Hearing Clerk a cashier's check or certified check in the amount of the penalty assessed in the final order, payable to the Treasurer, United States of America.

[45 FR 24363, Apr. 9, 1980, as amended at 57 FR 5326, Feb. 13, 1992]

§22.32 Motion to reconsider a final order.

Motions to reconsider a final order shall be filed within ten (10) days after service of the final order. Every such motion must set forth the matters claimed to have been erroneously decided and the nature of the alleged errors. Motions for reconsideration under this provision shall be directed to, and decided by, the Environmental Appeals Board. Motions for reconsideration directed to the Administrator, rather than to the Environmental Appeals Board, will not be considered, except in cases that the Environmental Appeals Board has referred to the Administrator pursuant to §22.04(a) and in which the Administrator has issued the final order. A motion for reconsideration shall not stay the effective date of the final order unless specifically so ordered by the Environmental Appeals Board.

[57 FR 5326, Feb. 13, 1992]

Subpart H—Supplemental Rules

§22.33 Supplemental rules of practice governing the administrative assessment of civil penalties under the Toxic Substances Control Act.

(a) *Scope of these Supplemental rules.* These Supplemental rules of practice shall govern, in conjunction with the preceding consolidated rules of practice (40 CFR part 22), all formal adjudications for the assessment of any civil penalty conducted under section 16(a) of the Toxic Substances Control Act (15 U.S.C. 2615(a)). Where inconsistencies exist between these Supplemental rules and the Consolidated rules, (§§22.01 through 22.32), these Supplemental rules shall apply.

(b) *Subpoenas.* (1) The attendance of witnesses or the production of documentary evidence may be required by subpoena. The Presiding Officer may grant a request for a subpoena upon a

showing of (i) the grounds and necessity therefor, and (ii) the materiality and relevancy of the evidence to be adduced. Requests for the production of documents shall describe the evidence sought as specifically as practicable.

(2) Subpoenas shall be served in accordance with § 22.05(b)(1) of the Consolidated Rules of Practice.

(3) Witnesses summoned before the Presiding Officer shall be paid the same fees and mileage that are paid witnesses in the courts of the United States. Fees shall be paid by the party at whose instance the witness appears. Where a witness appears pursuant to a request initiated by the Presiding Officer, fees shall be paid by the agency.

§ 22.34 Supplemental rules of practice governing the administrative assessment of civil penalties under title II of the Clean Air Act.

(a) *Scope of these Supplemental rules.* These Supplemental rules shall govern, in conjunction with the preceding Consolidated Rules of Practice (40 CFR part 22), all proceedings to assess a civil penalty conducted under sections 205(c), 211(d), and 213(d) of the Clean Air Act, as amended (42 U.S.C. 7524(c), 7545(d), and 7547(d)). Where inconsistencies exist between these Supplemental rules and the Consolidated Rules (§§ 22.01 through 22.32), these Supplemental rules shall apply.

(b) *Issuance of notice.* (1) Prior to the issuance of an administrative penalty order assessing a civil penalty, the person to whom the order is to be issued shall be given written notice of the proposed issuance of the order. Such notice shall be provided by the issuance of a complaint pursuant to § 22.13 of the Consolidated Rules of Practice.

(2) Notwithstanding § 22.15(a), any answer to the complaint must be filed with the Hearing Clerk within thirty (30) days after service of the complaint.

(c) *Subpoenas.* (1) The attendance of witnesses or the production of documentary evidence may be required by subpoena. The Presiding Officer may grant a request for a subpoena upon a showing of;

(i) The grounds and necessity therefor, and

(ii) The materiality and relevancy of the evidence to be adduced. Requests for the production of documents shall describe with specificity the documents sought.

(2) Subpoenas shall be served in accordance with § 22.05(b)(1) of the Consolidated Rules of Practice.

(3) Witnesses summoned before the Presiding Officer shall be paid the same fees and mileage that are paid in the courts of the United States. Fees shall be paid by the party at whose instance the witness appears. Where a witness appears pursuant to a request initiated by the Presiding Officer, fees shall be paid by EPA.

[57 FR 4318, Feb. 4, 1992]

§ 22.35 Supplemental rules of practice governing the administrative assessment of civil penalties under the Federal Insecticide, Fungicide, and Rodenticide Act.

(a) *Scope of these Supplemental rules.* These Supplemental rules of practice shall govern, in conjunction with the preceding Consolidated Rules of Practice (40 CFR part 22), all formal adjudications for the assessment of any civil penalty conducted under section 14(a) of the Federal Insecticide, Fungicide, and Rodenticide Act as amended (7 U.S.C. 1261(a)). Where inconsistencies exist between these Supplemental rules and the Consolidated rules, (§§ 22.01 through 22.32), these Supplemental rules shall apply.

(b) *Venue.* The prehearing conference and the hearing shall be held in the county, parish, or incorporated city of the residence of the person charged, unless otherwise agreed in writing by all parties.

(c) *Evaluation of proposed civil penalty.* In determining the dollar amount of the recommended civil penalty assessed in the initial decision, the Presiding Officer shall consider, in addition to the criteria listed in section 14(a)(3) of the Act, (1) respondent's history of compliance with the Act or its predecessor statute and (2) any evidence of good faith or lack thereof. The Presiding Officer must also consider the guidelines for the Assessment of Civil Penalties published in the FEDERAL REGISTER (39 FR 27711), and any amendments or supplements thereto.

§22.36 Supplemental rules of practice governing the administrative assessment of civil penalties and the revocation or suspension of permits under the Marine Protection, Research, and Sanctuaries Act.

(a) *Scope of these Supplemental rules.* These Supplemental rules shall govern, in conjunction with the preceding Consolidated Rules of Practice (40 CFR part 22), all formal adjudications conducted under section 105(a) or (f) of the Marine Protection, Research, and Sanctuaries Act as amended (33 U.S.C. 1415(a) and (f)). Where inconsistencies exist between these Supplemental rules and the Consolidated Rules, (§§22.01 through 22.32), these Supplemental rules shall apply.

(b) *Additional criterion for the issuance of a complaint for the revocation or suspension of a permit.* In addition to the three criteria listed in 40 CFR 22.13 for issuing a complaint for the revocation or suspension of a permit, complaints may be issued on the basis of a person's failure to keep records and notify appropriate officials of dumping activities, as required by 40 CFR 224.1 and 223.2.

§22.37 Supplemental rules of practice governing the administrative assessment of civil penalties under the Solid Waste Disposal Act.

(a) *Scope of these Supplemental rules.* These Supplemental rules of practice shall govern, in conjunction with the preceding Consolidated Rules of Practice (40 CFR part 22), all proceedings to assess a civil penalty conducted under section 3008 of the Solid Waste Disposal Act (42 U.S.C. 6928) (the ''Act''). Where inconsistencies exist between these Supplemental rules and the Consolidated Rules, (§§22.01 through 22.32), these Supplemental rules shall apply.

(b) *Issuance of notice.* Whenever, on the basis of any information, the Administrator determines that any person is in violation of (1) any requirement of subtitle C of the Act, (2) any regulation promulgated pursuant to subtitle C of the Act, or (3) a term or condition of a permit issued pursuant to subtitle C of the Act, the Administrator shall issue notice to the alleged violator of his failure to comply with such requirement, regulation or permit.

(c) *Content of notice.* Each notice of violation shall include:

(1) A specific reference to each provision of the Act, regulation, or permit term or condition which the alleged violator is alleged to have violated; and

(2) A concise statement of the factual basis for alleging such violation.

(d) *Service of notice.* Service of notice shall be made in accordance with §22.05(b)(2) of the Consolidated Rules of Practice.

(e) *Issuance of the complaint.* (1) Except as provided in paragraph (e)(3) of this section, the complainant may issue a complaint whenever he has reason to believe that any violation extends beyond the thirtieth day after service of the notice of violation.

(2) The complaint shall include, in addition to the elements stated in §22.14 of the Consolidated Rules, an order requiring compliance within a specified time period. The complaint shall be equivalent to the compliance order referred to in section 3008 of the Act.

(3) Whenever a violation is of a noncontinuous or intermittent nature, the Administrator may issue a complaint, without any prior notice to the violator, pursuant to §22.14 of the Consolidated Rules of Practice which may also require the violator to take any and all measures necessary to offset all adverse effects to health and the environment created, directly or indirectly, as a result of the violation.

(4) Notwithstanding §22.15(a), any answer to the complaint must be filed with the Regional Hearing Clerk within thirty (30) days after the filing of the complaint.

(f) *Subpoenas.* (1) The attendance of witnesses or the production of documentary evidence may be required by subpoena. The Presiding Officer may grant a request for a subpoena upon a showing of (i) the grounds and necessity therefor, and (ii) the materiality and relevancy of the evidence to be adduced. Requests for the production of documents shall describe with specificity the documents sought.

(2) Subpoenas shall be served in accordance with §22.05(b)(1) of the Consolidated Rules of Practice.

(3) Witnesses summoned before the Presiding Officer shall be paid the

same fees and mileage that are paid witnesses in the courts of the United States. Fees shall be paid by the party at whose instance the witness appears. Where a witness appears pursuant to a request initiated by the Presiding Officer, fees shall be paid by the Agency.

(g) *Final Orders to Federal Agencies on Appeal.* (1) In the case of an administrative order or decision issued to a department, agency, or instrumentality of the United States, such order or decision shall become the final order for purposes of the Federal Facility Compliance Act, 42 U.S.C. 6961(b), in accordance with §§22.27(c) and 22.31 except as provided in paragraph (g)(2) of this section.

(2) In the case of an administrative order or decision issued by the Environmental Appeals Board, if the head of the affected department, agency, or instrumentality requests a conference with the Administrator in writing and serves a copy of the request on the parties of record within thirty days of the Environmental Appeals Board's service of the order or decision, a decision by the Administrator (rather than the Environmental Appeals Board) shall be the final order for the purposes of the Federal Facility Compliance Act.

(3) In the event the department, agency, or instrumentality of the United States files a motion for reconsideration with the Environmental Appeals Board in accordance with §22.32, filing such motion for reconsideration shall not toll the thirty-day period for filing the request with the Administrator for a conference unless specifically so ordered by the Environmental Appeals Board.

(42 U.S.C. 6901, *et seq.*)

[45 FR 24363, Apr. 9, 1980, as amended at 61 FR 11092, Mar. 18, 1996]

EFFECTIVE DATE NOTE: At 45 FR 79808, Dec. 2, 1980, paragraphs (b), (c), (d), (e)(1) and (3) of §22.37 were suspended until further notice, effective Dec. 2, 1980.

§ 22.38 Supplemental rules of practice governing the administrative assessment of Class II penalties under the Clean Water Act.

(a) *Scope of these supplemental rules.* These supplemental rules of practice shall govern, in conjunction with the preceding Consolidated Rules of Practice (40 CFR part 22), administrative proceedings for the assessment of any Class II civil penalty under section 309(g) of the Clean Water Act (33 U.S.C. 1319(g)).

(b) *Consultation with states.* The Administrator will consult with the state in which the alleged violation occurs before issuing a final order assessing a Class II civil penalty.

(c) *Public notice.* Before issuing a final order assessing a Class II civil penalty, the Administrator will provide public notice of the complaint.

(d) *Comment by a person who is not a party.* A person not a party to the Class II proceeding who wishes to comment upon a complaint must file written comments with the Regional Hearing Clerk within 30 days after public notice of the complaint and serve a copy of the comments upon each party. For good cause shown the Administrator, the Regional Administrator, or the Presiding Officer, as appropriate, may accept late comments. The Administrator will give any person who comments on a complaint notice of any hearing and notice of the final order assessing a penalty. Although commenters may be heard and present evidence at any hearing held under section 309(g) of the Act, commenters shall not be accorded party status with right of cross examination unless they formally move to intervene and are granted party status under §22.11.

(e) *Administrative procedure and judicial review.* Action of the Administrator for which review could have been obtained under section 509(b)(1) of the Act shall not be subject to review in an administrative proceeding for the assessment of Class II civil penalty under section 309(g).

(f) *Petitions to set aside an order and to provide a hearing.* If no hearing on the complaint is held before issuance of an order assessing a Class II civil penalty, any person who commented on the complaint may petition the Administrator, within 30 days after issuance of the order, to set aside the order and to provide a hearing on the complaint. If the evidence presented by the petitioner in support of the petition is material and was not considered in the issuance of the order, the Administrator will immediately set aside the order

and provide a hearing in accordance with the Consolidated Rules of Practice and these supplemental rules of practice. If the Administrator denies a hearing under section 309(g)(4)(C) of the Act, the Administrator will provide to the petitioner, and publish in the FEDERAL REGISTER, notice of and the reasons for the denial.

[55 FR 23840, June 12, 1990]

§22.39 Supplemental rules of practice governing the administrative assessment of administrative penalties under section 109 of the Comprehensive Environmental Response, Compensation, and Liability Act of 1980, as amended.

(a) *Scope of these Supplemental rules.* These Supplemental rules of practice shall govern, in conjunction with the preceding Consolidated Rules of Practice (40 CFR part 22), administrative proceedings for the assessment of any civil penalty under section 109 of the Comprehensive Environmental Response, Compensation, and Liability Act of 1980, as amended (42 U.S.C. 9609). Where inconsistencies exist between these Supplemental rules and the Consolidated Rules (§§22.01 through 22.32), these Supplemental rules shall apply.

(b) *Subpoenas.* (1) The attendance and testimony of witnesses or the production of relevant papers, books, and documents may be required by subpoena. The Presiding Officer may grant a request for a subpoena upon a showing of—

(i) The grounds and necessity therefor, and

(ii) The materiality and relevancy of the evidence to be adduced.

Requests for the production of documents shall describe the evidence sought as specifically as practicable.

(2) Subpoenas shall be served in accordance with §22.05(b)(1) of the Consolidated Rules of Practice.

(3) Witnesses summoned before the Presiding Officer shall be paid the same fees and mileage that are paid witnesses in the courts of the United States. Fees shall be paid by the party at whose instance the witness appears. Where a witness appears pursuant to a request initiated by the Presiding Officer, fees shall be paid by the Agency.

(c) *Judicial review.* Any person who requested a hearing with respect to a Class II civil penalty under section 109 of CERCLA and who is the recipient of a final order assessing a civil penalty may file a petition for judicial review of such order with the United States Court of Appeals for the District of Columbia or for any other circuit in which such person resides or transacts business. Any person who requested a hearing with respect to a Class I civil penalty under section 109 of CERCLA and who is the recipient of a final order assessing the civil penalty may file a petition for judicial review of such order with the appropriate district court of the United States. All petitions must be filed within 30 days of the date the order making the assessment was issued.

(d) *Payment of civil penalty assessed.* Payment of civil penalties finally assessed by the Regional Administrator shall be made by forwarding a cashier's check, payable to the ''EPA, Hazardous Substances Superfund,'' in the amount assessed, and noting the case title and docket number, to the appropriate regional Superfund Lockbox Depository. Notice of payment must be sent by Respondent to the Hearing Clerk for inclusion as part of the administrative record for the proceeding in which the civil penalty was assessed. Interest on overdue payments shall be collected pursuant to the Debt Collection Act, 37 U.S.C. 3717.

[54 FR 21176, May 16, 1989]

§22.40 Supplemental rules of practice governing the administrative assessment of administrative penalties under section 325 of the Emergency Planning and Community Right-To-Know Act of 1986 (EPCRA).

(a) *Scope of these Supplemental Rules.* These Supplemental rules of practice shall govern, in conjunction with the preceding Consolidated Rules of Practice (40 CFR part 22), administrative proceedings for the assessment of any civil penalty under section 325 for violations of the Emergency Planning and Community Right-To-Know Act of 1986 (EPCRA). Where inconsistencies exist between these Supplemental rules and the Consolidated Rules, (§§22.01

through 22.32) these Supplemental rules shall apply.

(b) *Subpoenas.* (1) The attendance and testimony of witnesses or the production of relevant papers, books, and documents may be required by subpoena. The Presiding Officer may grant a request for a subpoena upon a showing of (i) the grounds and necessity therefore, and (ii) the materiality and relevancy of the evidence to be adduced. Requests for the production of documents shall describe the evidence sought as specifically as practicable.

(2) Subpoenas shall be served in accordance with § 22.05(b)(1) of the Consolidated Rules of Practice.

(3) Witnesses summoned before the Presiding Officer shall be paid the same fees and mileage that are paid witnesses in the courts of the United States. Fees shall be paid by the party at whose instance the witness appears. Where a witness appears pursuant to request initiated by the Presiding Officer, fees shall be paid by the Agency.

(c) *Judicial review.* Any person against whom a civil penalty is assessed may seek judicial review in the appropriate district court of the United States by filing a notice of appeal and by simultaneously sending a copy of such notice by certified mail to the Administrator. The notice must be filed within 30 days of the date the order making such assessment was issued. The Administrator shall promptly file in such court a certified copy of the record upon which such violation was found or such penalty imposed.

(d) *Procedures for collection of civil penalty.* If any person fails to pay an assessment of a civil penalty after it has become a final and unappealable order or after the appropriate court has entered final judgment in favor of the United States, the Administrator may request the Attorney General of the United States to institute a civil action in an appropriate district court of the United States to collect the penalty, and such court shall have jurisdiction to hear and decide any such action. In hearing such action, the court shall have authority to review the violation and the assessment of the civil penalty on the record. Interest on overdue payments shall be collected pursuant to the Debt Collection Act, 37 U.S.C. 3717.

[54 FR 21176, May 16, 1989]

§ 22.41 Supplemental rules of practice governing the administrative assessment of civil penalties under Title II of the Toxic Substances Control Act, enacted as section 2 of the Asbestos Hazard Emergency Response Act (AHERA).

(a) Scope of the Supplemental rules. These Supplemental rules of practice shall govern, in conjunction with the preceding Consolidated Rules of Practice (40 CFR part 22), all proceedings to assess a civil penalty conducted under section 207 of the Toxic Substances Control Act (the ''Act'') (15 U.S.C. 2647). Where inconsistencies exist between these Supplemental rules and the Consolidated rules (§§ 22.01 through 22.32), these Supplemental rules shall apply.

(b) Collection of civil penalty. Any civil penalty collected under section 207 of the Act shall be used by the local educational agency for purposes of complying with Title II of the Act. Any portion of a civil penalty remaining unspent after a local educational agency achieves compliance shall be deposited into the Asbestos Trust Fund established under section 5 of AHERA.

[54 FR 24112, June 5, 1989]

§ 22.42 Supplemental rules of practice governing the administrative assessment of civil penalties for violations of compliance orders issued under Part B of the Safe Drinking Water Act.

(a) *Scope of these supplemental rules.* These supplemental rules of practice shall govern, in conjunction with the preceding Consolidated Rules of Practice (40 CFR part 22), all proceedings to assess a civil penalty under section 1414(g)(3)(B). Where inconsistencies exist between these supplemental rules and the Consolidated rules, these supplemental rules shall apply.

(b) *Definition of ''person.''* In addition to the terms set forth in 40 CFR 22.03(a) that define *person,* for purposes of this section and proceedings under section 1414(g)(3)(B) of the Safe Drinking Water Act, the term person shall also include

any officer, employee, or agent of any corporation, company or association.

(c) *Issuance of complaint.* If the Administrator determines that a person has violated any provision of a compliance order issued under section 1414(g)(1) of the Safe Drinking Water Act, 42 U.S.C. 300g–3(g)(1), he may institute a proceeding for the assessment of a civil penalty by issuing a complaint under the Act and this part.

(d) *Content of the complaint.* A complaint for the assessment of civil penalties under this part shall include specific reference to:

(1) Each provision of the compliance order issued under section 1414(g)(1) of the Act, 42 U.S.C. 300g–3(g)(1), which is alleged to have violated; and

(2) Each violation of a Safe Drinking Water Act regulation, schedule, or other requirement which served as the basis for the compliance order which is alleged to have been violated.

(e) *Scope of hearing.* Action of the Administrator with respect to which judicial review could have been obtained under section 1448 of the Safe Drinking Water Act, 42 U.S.C. 300j–7, shall not be subject to review in an administrative proceeding for the assessment of a civil penalty under section 1414(g)(3)(B) of the SDWA and this part.

[56 FR 3757, Jan. 30, 1991]

§ 22.43 Supplemental rules of practice governing the administrative assessment of civil penalties under section 113(d)(1) of the Clean Air Act.

(a) *Scope of these Supplemental rules.* These Supplemental rules shall govern, in conjunction with the preceding Consolidated Rules of Practice (40 CFR part 22), all proceedings to assess a civil penalty conducted under section 113(d)(1) of the Clean Air Act (42 U.S.C. 7413(d)(1)). Where inconsistencies exist between these Supplemental rules and the Consolidated Rules (§§ 22.01 through 22.32), these Supplemental rules shall apply.

(b) *Issuance of notice.* (1) Prior to the issuance of an administrative penalty order assessing a civil penalty, the person to whom the order is to be issued shall be given written notice of the proposed issuance of the order. Such notice shall be provided by the issuance of a complaint pursuant to § 22.13 of the Consolidated Rules of Practice.

(2) Notwithstanding § 22.15(a), any answer to the complaint must be filed with the Regional Hearing Clerk within thirty (30) days after service of the complaint.

(c) *Subpoenas.* (1) The attendance of witnesses or the production of documentary evidence may be required by subpoena. The Presiding Officer may grant a request for a subpoena upon a showing of;

(i) The grounds and necessity therefor, and

(ii) The materiality and relevancy of the evidence to be adduced.

Requests for the production of documents shall describe with specificity the documents sought.

(2) Subpoenas shall be served in accordance with § 22.05(b)(1) of the Consolidated Rules of Practice.

(3) Witnesses summoned before the Presiding Officer shall be paid the same fees and mileage that are paid in the courts of the United States. Fees shall be paid by the party at whose instance the witness appears. Where a witness appears pursuant to a request initiated by the Presiding Officer, fees shall be paid by EPA.

[57 FR 4318, Feb. 4, 1992]

APPENDIX TO PART 22—ADDRESSES OF EPA REGIONAL OFFICES

Region I—John F. Kennedy Federal Building, Boston, MA 02203.

Region II—26 Federal Plaza, New York, NY 10007.

Region III—Curtis Building, 6th and Walnut Streets, Philadelphia, PA 19106.

Region IV—345 Courtland Street NE., Atlanta, GA 30308.

Region V—230 South Dearborn Street, Chicago, IL 60604.

Region VI—First International Building, 1201 Elm Street, Dallas, TX 75270.

Region VII—1735 Baltimore Street, Kansas City, MO 64108.

Region VIII—1860 Lincoln Street, Denver, CO 80203.

Region IX—215 Fremont Street, San Francisco, CA 94105.

Region X—1200 6th Avenue, Seattle, WA 98101.

PART 23—JUDICIAL REVIEW UNDER EPA—ADMINISTERED STATUTES

Sec.
23.1 Definitions.
23.2 Timing of Administrator's action under Clean Water Act.
23.3 Timing of Administrator's action under Clean Air Act.
23.4 Timing of Administrator's action under Resource Conservation and Recovery Act.
23.5 Timing of Administrator's action under Toxic Substances Control Act.
23.6 Timing of Administrator's action under Federal Insecticide, Fungicide and Rodenticide Act.
23.7 Timing of Administrator's action under Safe Drinking Water Act.
23.8 Timing of Administrator's action under Uranium Mill Tailings Radiation Control Act of 1978.
23.9 Timing of Administrator's action under the Atomic Energy Act.
23.10 Timing of Administrator's action under the Federal Food, Drug, and Cosmetic Act.
23.11 Holidays.
23.12 Filing notice of judicial review.

AUTHORITY: Clean Water Act, 33 U.S.C. 1361(a), 1369(b); Clean Air Act, 42 U.S.C. 7601(a)(1), 7607(b); Resource, Conservation and Recovery Act, 42 U.S.C. 6912(a), 6976; Toxic Substances Control Act, 15 U.S.C. 2618; Federal Insecticide, Fungicide, and Rodenticide Act, 7 U.S.C. 136n(b), 136w(a); Safe Drinking Water Act, 42 U.S.C. 300j–7(a)(2), 300j–9(a); Atomic Energy Act, 42 U.S.C. 2201, 2239; Federal Food, Drug, and Cosmetic Act, 21 U.S.C. 371(a), 346a, 348; 28 U.S.C. 2112(a), 2343, 2344.

SOURCE: 50 FR 7270, Feb. 21, 1985, unless otherwise noted.

§ 23.1 Definitions.

As used in this part, the term:

(a) *Federal Register document* means a document intended for publication in the Federal Register and bearing in its heading an identification code including the letters *FRL*.

(b) *Admininstrator* means the Administrator or any official exercising authority delegated by the Administrator.

(c) *General Counsel* means the General Counsel of EPA or any official exercising authority delegated by the General Counsel.

[50 FR 7270, Feb. 21, 1985, as amended at 53 FR 29322, Aug. 3, 1988]

§ 23.2 Timing of Administrator's action under Clean Water Act.

Unless the Administrator otherwise explicity provides in a particular promulgation or approval action, the time and date of the Administrator's action in promulgation (for purposes of sections 509(b)(1) (A), (C), and (E)), approving (for purposes of section 509(b)(1)(E)), making a determination (for purposes of section 509(b)(1) (B) and (D), and issuing or denying (for purposes of section 509(b)(1)(F)) shall be at 1:00 p.m. eastern time (standard or daylight, as appropriate) on (a) for a FEDERAL REGISTER document, the date that is two weeks after the date when the document is published in the FEDERAL REGISTER, or (b) for any other document, two weeks after it is signed.

§ 23.3 Timing of Administrator's action under Clean Air Act.

Unless the Administrator otherwise explicitly provides in a particular promulgation, approval, or action, the time and date of such promulgation, approval or action for purposes of the second sentence of section 307(b)(1) shall be at 1:00 p.m. eastern time (standard or daylight, as appropriate) on (a) for a FEDERAL REGISTER document, the date when the document is published in the FEDERAL REGISTER, or (b) for any other document, two weeks after it is signed.

§ 23.4 Timing of Administrator's action under Resource Conservation and Recovery Act.

Unless the Administrator otherwise explicitly provides in taking a particular action, for purposes of section 7006(b), the time and date of the Administrator's action in issuing, denying, modifying, or revoking any permit under section 3005, or in granting, denying, or withdrawing authorization or interim authorization under section 3006, shall be at 1:00 p.m. eastern time (standard or daylight, as appropriate) on the date that is (a) for a FEDERAL REGISTER document, two weeks after the date when the document is published in the FEDERAL REGISTER, or (b) for any other document, two weeks after it is signed.

§23.5 Timing of Administrator's action under Toxic Substances Control Act.

Unless the Administrator otherwise explicitly provides in promulgating a particular rule or issuing a particular order, the time and date of the Administrator's promulgation or issuance for purposes of section 19(a)(1) shall be at 1:00 p.m. eastern time (standard or daylight, as appropriate) on the date that is (a) for a FEDERAL REGISTER document, two weeks after the date when the document is published in the FEDERAL REGISTER, or (b) for any other document, two weeks after it is signed.

§23.6 Timing of Administrator's action under Federal Insecticide, Fungicide and Rodenticide Act.

Unless the Administrator otherwise explicitly provides in a particular order, the time and date of entry of an order issued by the Administrator following a public hearing for purposes of section 16(b) shall be at 1:00 p.m. eastern time (standard or daylight, as appropriate) on the date that is two weeks after it is signed.

§23.7 Timing of Administrator's action under Safe Drinking Water Act.

Unless the Administrator otherwise explicitly provides in a particular promulgation action or determination, the time and date of the Administrator's promulgation, issuance, or determination for purposes of section 1448(a)(2) shall be at 1:00 p.m. eastern time (standard or daylight, as appropriate) on the date that is (a) for a FEDERAL REGISTER document, two weeks after the date when the document is published in the FEDERAL REGISTER or (b) for any other document, two weeks after it is signed.

§23.8 Timing of Administrator's action under Uranium Mill Tailings Radiation Control Act of 1978.

Unless the Administrator otherwise explicitly provides in a particular rule, the time and date of the Administrator's promulgation for purposes of 42 U.S.C. 2022(c)(2) shall be at 1:00 p.m. eastern time (standard or daylight, as appropriate) on the date that is two weeks after the date when notice of promulgation is published in the FEDERAL REGISTER.

§23.9 Timing of Administrator's action under the Atomic Energy Act.

Unless the Administrator otherwise explicitly provides in a particular order, the time and date of the entry of an order for purposes of 28 U.S.C. 2344 shall be at 1:00 p.m. eastern time (standard or daylight, as appropriate) on the date that is two weeks after the date when notice thereof is published in the FEDERAL REGISTER.

§23.10 Timing of Administrator's action under the Federal Food, Drug, and Cosmetic Act.

Unless the Administrator otherwise explicitly provides in a particular order, the time and date of the entry of an order issued after a public hearing for purposes of 21 U.S.C. 346a(i) or 348(g) shall be at 1:00 p.m. eastern time (standard or daylight, as appropriate) on the date that is (a) for a FEDERAL REGISTER document, two weeks after the date when the document is published in the FEDERAL REGISTER, or (b) for any other document, two weeks after it is signed.

§23.11 Holidays.

If the date determined under §§23.2 to 23.10 falls on a Federal holiday, then the time and date of the Administrator's action shall be at 1:00 p.m. eastern time on the next day that is not a Federal holiday.

§23.12 Filing notice of judicial review.

(a) For the purposes of 28 U.S.C. 2112(a), a copy of any petition filed in any United States Court of Appeals challenging a final action of the Administrator shall be sent by certified mail, return receipt requested, or by personal delivery to the General Counsel. The petition copy shall be time-stamped by the Clerk of the Court when the original is filed with the Court. The petition should be addressed to: Correspondence Control Unit, Office of General Counsel (LE–130), U.S. Environmental Protection Agency, 401 M Street SW., Washington, DC 20460.

(b) If the General Counsel receives two or more petitions filed in two or more United States Courts of Appeals

for review of any Agency action within ten days of the effective date of that action for purposes of judicial review (as specified under §§ 23.2 through 23.10 of this part), the General Counsel will notify the United States Judicial Panel of Multidistrict Litigation of any petitions that were received within the ten day period, in accordance with the applicable rules of the Panel.

(c) For purposes of determining whether a petition for review has been received within the ten day period under paragraph (b) of this section, the petition shall be considered received on the date of service, if served personally. If service is accomplished by mail, the date of receipt shall be considered to be the date noted on the return receipt card.

[53 FR 29322, Aug. 3, 1988]

PART 24—RULES GOVERNING ISSUANCE OF AND ADMINISTRATIVE HEARINGS ON INTERIM STATUS CORRECTIVE ACTION ORDERS

Subpart A—General

Sec.
24.01 Scope of these rules.
24.02 Issuance of initial orders; definition of final orders and orders on consent.
24.03 Maintenance of docket and official record.
24.04 Filing and service of orders, decisions, and documents.
24.05 Response to the initial order; request for hearing.
24.06 Designation of Presiding Officer.
24.07 Informal settlement conference.
24.08 Selection of appropriate hearing procedures.

Subpart B—Hearings on Orders Requiring Investigations or Studies

24.09 Qualifications of Presiding Officer; ex parte discussion of the proceeding.
24.10 Scheduling the hearing; pre-hearing submissions by respondent.
24.11 Hearing; oral presentations and written submissions by the parties.
24.12 Summary of hearing; Presiding Officer's recommendation.

Subpart C—Hearings on Orders Requiring Corrective Measures

24.13 Qualifications of Presiding Officer; ex parte discussion of the proceeding.
24.14 Scheduling the hearing; pre-hearing submissions by the parties.
24.15 Hearing; oral presentations and written submissions by the parties.
24.16 Transcript or recording of hearing.
24.17 Presiding Officer's recommendation.

Subpart D—Post-Hearing Procedures

24.18 Final decision.
24.19 Final order.
24.20 Final agency action.

AUTHORITY: 42 U.S.C. sections 6912, 6928, 6991b.

SOURCE: 53 FR 12263, Apr. 13, 1988, unless otherwise noted.

Subpart A—General

§ 24.01 Scope of these rules.

(a) These rules establish procedures governing issuance of administrative orders for corrective action pursuant to sections 3008(h) and 9003(h) of the Solid Waste Disposal Act, as amended by the Resource Conservation and Recovery Act (the Act), and conduct of administrative hearings on such orders, except as specified in paragraphs (b) and (c) of this section.

(b) The hearing procedures appearing at 40 CFR part 22 govern administrative hearings on any order issued pursuant to section 3008(h) of the Act which:

(1) Is contained within an administrative order that includes claims under section 3008(a) of the Act; or

(2) Includes a suspension or revocation of authorization to operate under section 3005(e) of the Act; or

(3) Seeks penalties under section 3008(h)(2) of the Act for non-compliance with a section 3008(h) order.

(c) The hearing procedures appearing at 40 CFR part 22 govern administrative hearings on any order issued pursuant to section 9003(h) of the Act that is contained within an administrative order that includes claims under section 9006 of the Act.

(d) Questions arising at any stage of the proceeding which are not addressed in these rules shall be resolved at the discretion of the Regional Administrator or Presiding Officer, as appropriate.

[53 FR 12263, Apr. 13, 1988, as amended at 56 FR 49380, Sept. 27, 1991]

§24.02 Issuance of initial orders; definition of final orders and orders on consent.

(a) An administrative action under section 3008(h) or 9003(h) of the Act shall be commenced by issuance of an administrative order. When the order is issued unilaterally, the order shall be referred to as an initial administrative order and may be referenced as a proceeding under section 3008(h) or 9003(h) of the Act. When the order has become effective, either after issuance of a final order following a final decision by the Regional Administrator, or after thirty days from issuance if no hearing is requested, the order shall be referred to as a final administrative order. Where the order is agreed to by the parties, the order shall be denominated as a final administrative order on consent.

(b) The initial administrative order shall be executed by an authorized official of EPA (petitioner), other than the Regional Administrator or the Assistant Administrator for the Office of Solid Waste and Emergency Response. For orders issued by EPA Headquarters, rather than by a Regional office, all references in these procedures to the Regional Administrator shall be understood to be to the Assistant Administrator for Solid Waste and Emergency Response or his delegatee.

(c) The initial administrative order shall contain:

(1) A reference to the legal authority pursuant to which the order is issued,

(2) A concise statement of the factual basis upon which the order is issued, and

(3) Notification of respondent's right to request a hearing with respect to any issue of material fact or the appropriateness of the proposed corrective action.

[53 FR 12263, Apr. 13, 1988, as amended at 56 FR 49380, Sept. 27, 1991]

§24.03 Maintenance of docket and official record.

(a) A Clerk shall be designated by the Regional Administrator to receive all initial orders, final orders, decisions, responses, memoranda, and documents regarding the order and to maintain the official record and docket.

(b) On or before the date the initial order is served on respondent the EPA office issuing the order shall deliver to the Clerk (a copy of) the administrative record supporting the findings of fact, determinations of law, and relief sought in the initial administrative order. This record shall include all relevant documents and oral information (which has been reduced to writing), which the Agency considered in the process of developing and issuing the order, exclusive of privileged internal communications. The administrative record delivered to the Clerk must have an index and be available for review in the appropriate Agency Regional or Headquarters office during normal business hours after the order is issued.

§24.04 Filing and service of orders, decisions, and documents.

(a) *Filing of orders, decisions, and documents.* The original and one copy of the initial administrative order, the recommended decision of the Presiding Officer, the final decision and the final administrative order, and one copy of the administrative record and an index thereto must be filed with the Clerk designated for 3008(h) or 9003(h) orders. In addition, all memoranda and documents submitted in the proceeding shall be filed with the clerk.

(b) *Service of orders, decisions, and rulings.* The Clerk (or in the case of the initial administrative order, any other designated EPA employee) shall arrange for the effectuation of service of the initial administrative order, the recommended decision of the Presiding Officer, the final decision, and final administrative order. Service of a copy of the initial administrative order together with a copy of these procedures, the recommended decision of the Presiding Officer, the final decision, or a final administrative order, shall be made personally or by certified mail, return receipt requested or, if personal service cannot be effectuated or certified mail is returned refused or unsigned, by regular mail, on the respondent or his representative. The Clerk shall serve other documents from the Presiding Officer by regular mail.

(c) *Service of documents filed by the parties.* Service of all documents, filed

by the parties, shall be made by the parties or their representatives on other parties or their representatives and may be regular mail, with the original filed with the Clerk. The original of any pleading, letter, or other document (other than exhibits) shall be signed by the party filing or by his counsel or other representative. The signature constitutes a representation by the signer that he has read the pleading, letter, or other document, that to the best of his knowledge, information, and belief, the statements made therein are true, and that it is not interposed for delay.

(d) *Service in general.* Service of orders, decisions, rulings, or documents by either the Clerk or the parties shall, in the case of a domestic or foreign corporation, a partnership, or other unincorporated association, which is subject to suit under a common name, be made, as prescribed in § 24.04 (b) and (c), upon an officer, partner, managing or general agent, or any person authorized by appointment or by Federal or State law to receive service of process.

(e) *Effective date of service.* Service of the initial administrative order and final administrative order is complete upon receipt by respondent (or the respondent's agent, attorney, representative or other person employed by respondent and receiving such service), personally or by certified mail, or upon mailing by regular mail, if personal service or service by certified mail cannot be accomplished, in accordance with § 24.04(b). Service of all other pleadings and documents is complete upon mailing, except as provided in §§ 24.10(b) and 24.14(e).

[53 FR 12263, Apr. 13, 1988, as amended at 56 FR 49380, Sept. 27, 1991]

§ 24.05 Response to the initial order; request for hearing.

(a) The initial administrative order becomes a final administrative order thirty (30) days after service of the order, unless the respondent files with the Clerk within thirty (30) days after service of the order, a response to the initial order and requests a hearing.

(b) The response to the initial order and request for a hearing must be in writing and mailed to, or personally served on, the Clerk of the Regional office which issued the order.

(c) The response to the initial order shall specify each factual or legal determination, or relief provision in the initial order the respondent disputes and shall briefly indicate the basis upon which it disputes such determination or provision.

(d) Respondent may include with its response to the initial order and request for a hearing a statement indicating whether it believes the subpart B or subpart C hearing procedures should be employed for the requested hearing and the reason(s) therefore.

§ 24.06 Designation of Presiding Officer.

Upon receipt of a request for a hearing, the Regional Administrator shall designate a Presiding Officer to conduct the hearing and preside over the proceedings.

§ 24.07 Informal settlement conference.

The respondent may request an informal settlement conference at any time by contacting the appropriate EPA employee, as specified in the initial administrative order. A request for an informal conference will not affect the respondent's obligations to timely request a hearing. Whether or not the respondent requests a hearing, the parties may confer informally concerning any aspect of the order. The respondent and respondent's representatives shall generally be allowed the opportunity at an informal conference to discuss with the appropriate Agency technical and legal personnel all aspects of the order, and in particular the basis for the determination that a release has occurred and the appropriateness of the ordered corrective action.

§ 24.08 Selection of appropriate hearing procedures.

(a) The hearing procedures set forth in subpart B of this part shall be employed for any requested hearing if the initial order directs the respondent——

(1) To undertake only a RCRA Facility Investigation and/or Corrective Measures Study, which may include monitoring, surveys, testing, information gathering, analyses, and/or studies (including studies designed to develop

recommendations for appropriate corrective measures), or

(2) To undertake such investigations and/or studies and interim corrective measures, and if such interim corrective measures are neither costly nor technically complex and are necessary to protect human health and the environment prior to development of a permanent remedy, or

(3) To undertake investigations/studies with respect to a release from an underground storage tank.

(b) The hearing procedures set forth in subpart C of this part shall be employed if the respondent seeks a hearing on an order directing that——

(1) Corrective measures or such corrective measures together with investigations/studies be undertaken, or

(2) Corrective action or such corrective action together with investigations/studies be undertaken with respect to any release from an underground storage tank.

(c) The procedures contained in subparts A and D of this part shall be followed regardless of whether the initial order directs the respondent to undertake an investigation pursuant to the procedures in subpart B of this part, or requires the respondent to implement corrective measures pursuant to the procedures in subpart C of this part.

[56 FR 49380, Sept. 27, 1991]

Subpart B—Hearings on Orders Requiring Investigations or Studies

§24.09 Qualifications of Presiding Officer; ex parte discussion of the proceeding.

The Presiding Officer shall be either the Regional Judicial Officer (as described in 40 CFR 22.04(b)) or another attorney employed by the Agency, who has had no prior connection with the case, including the performance of any investigative or prosecuting functions. At no time after issuance of the initial administrative order and prior to issuance of the final order shall the Regional Administrator, Presiding Officer, or any person who will advise these officials in the decision on the case, discuss ex parte the merits of the proceeding with any interested person outside the Agency, with any Agency staff member who performs a prosecutorial or investigative function in such proceeding or a factually related proceeding, or with any representative of such person. If, after issuance of the initial order and prior to issuance of the final order, the Regional Administrator, Presiding Officer, or any person who will advise these officials in the decision on the case receives from or on behalf of any party in an ex parte communication information which is relevant to the decision on the case and to which other parties have not had an opportunity to respond, a summary of such information shall be served on all other parties, who shall have an opportunity to reply to same within ten (10) days of service of the summary.

§24.10 Scheduling the hearing; prehearing submissions by respondent.

(a) *Date and time for hearing.* The Presiding Officer shall establish the date, time, location, and agenda for the requested public hearing and transmit this information to the parties. Subject to §24.10(c), the hearing shall be scheduled and held within thirty (30) days of the Agency's receipt of the request for a public hearing.

(b) *Pre-hearing submissions by respondent.* At any time up to five (5) business days before the hearing respondent may, but is not required to, submit for inclusion in the administrative record information and argument supporting respondent's positions on the facts, law and relief, as each relates to the order in question. A copy of any information or argument submitted by respondent shall be served such that the Clerk and petitioner receive same at least five (5) business days before hearing.

(c) *Postponment of hearing.* The Presiding Officer may grant an extension of time for the conduct of the hearing upon written request of either party, for good cause shown, and after consideration of any prejudice to other parties. The Presiding Officer may not extend the date by which the request for hearing is due under §24.05(a).

(d) *Location of hearing.* The hearing shall be held in the city in which the relevant EPA Regional Office is located, unless the Presiding Officer determines that there is good cause to hold it in another location.

§ 24.11 Hearing; oral presentations and written submissions by the parties.

The Presiding Officer shall conduct the hearing in a fair and impartial way, taking action as needed to avoid unnecessary delay, exclude redundant material and maintain order during the proceedings. Representatives of EPA shall introduce the administrative record and be prepared to summarize the basis for the order. The respondent shall have a reasonable opportunity to address relevant issues and present its views through legal counsel or technical advisors. The Presiding Officer may also allow technical and legal discussions and interchanges between the parties, including responses to questions to the extent deemed appropriate. It is not the Agency's intent to provide EPA or respondent an opportunity to engage in direct examination or cross-examination of witnesses. The Presiding Officer may address questions to the respondent's or EPA's representative(s) during the hearing. Each party shall insure that a representative(s) is (are) present at the hearing, who is (are) capable of responding to questions and articulating that party's position on the law and facts at issue. Where respondent can demonstrate that through no fault of its own certain documents supportive of its position could not have been submitted before hearing in accordance with the requirements of § 24.10(b), it may submit such documents at the hearing. Otherwise no new documentary support may be submitted at hearing. The Presiding Officer may upon request grant petitioner leave to respond to submissions made by respondent pursuant to this section or § 24.10(b). The Presiding Officer shall have the discretion to order either party to submit additional information (including but not limited to posthearing briefs on undeveloped factual, technical, or legal matters) in whatever form he deems appropriate either at or after the hearing.

§ 24.12 Summary of hearing; Presiding Officer's recommendation.

(a) As soon as practicable after the conclusion of the hearing a written summary of the proceeding shall be prepared. This summary shall, at a minimum, identify:

(1) The dates of and known attendees at the hearing; and

(2) The bases upon which the respondent contested the terms of the order.

The summary must be signed by the Presiding Officer.

(b) The Presiding Officer will evaluate the entire administrative record and, on the basis of that review and the representations of EPA and respondent at the hearing, shall prepare and file a recommended decision with the Regional Administrator. The recommended decision must address all material issues of fact or law properly raised by respondent, and must recommend that the order be modified, withdrawn or issued without modification. The recommended decision must provide an explanation with citation to material contained in the record for any decision to modify a term of the order, to issue the order without change, or to withdraw the order. The recommended decision shall be based on the administrative record. If the Presiding Officer finds that any contested relief provision in the order is not supported by a preponderance of the evidence in the record, the Presiding Officer shall recommend that the order be modified and issued on terms that are supported by the record or withdrawn.

(c) At any time within twenty-one (21) days of service of the recommended decision on the parties, the parties may file comments on the recommended decision with the Clerk. The Clerk shall promptly transmit any such comments received to the Regional Administrator for his consideration in reaching a final decision.

Subpart C—Hearings on Orders Requiring Corrective Measures

§ 24.13 Qualifications of Presiding Officer; ex parte discussion of the proceeding.

(a) *Qualifications of Presiding Officer.* The Presiding Officer shall be either the Regional Judicial Officer (as described in 40 CFR 22.04(b)) of another attorney employed by the Agency, who has had no prior connection with the

case, including the performance of any investigative or prosecuting functions.

(b) *Ex parte discussion of the proceeding.* At no time after issuance of the initial administrative order and prior to issuance of the final order shall the Regional Administrator, Presiding Officer, or any person who will advise these officials in the decision on the case, discuss ex parte the merits of the proceeding with any interested person outside the Agency, with any Agency staff member who performs a prosecutorial or investigative function in such proceeding or a factually related proceeding, or with any representative of such person. If, after issuance of the initial order and prior to issuance of the final order, the Regional Administrator, Presiding Officer, or any person who will advise these officials in the decision on the case receives from or on behalf of any party in an ex parte communication information which is relevant to the decision on the case and to which other parties have not had an opportunity to respond, a summary of such information shall be served on all other parties, who shall have an opportunity to reply to same within ten (10) days of service of the summary.

§24.14 Scheduling the hearing; prehearing submissions by the parties.

(a) The Presiding Officer shall establish an expeditious schedule for:

(1) The submission by respondent of a memorandum, with appropriate affidavits and exhibits, stating and supporting respondent's position on the facts, law and relief, specifying the bases upon and manner in which such determinations or relief provisions, if erroneous, require modification or withdrawal of the order:

(2) Submission of a response by EPA; and

(3) A public hearing.

Subject to §24.14(b), a hearing shall be scheduled within 45 days of the order setting the schedule. The Presiding Officer shall establish the date, time, location and agenda for the hearing and shall transmit this information to the parties along with the schedule for the hearing.

(b) *Postponement of the hearing.* The Presiding Officer, as appropriate, may grant an extension of time for the filing of any document, other than a request for a hearing under §24.05(a), or may grant an extension of time for the conduct of the hearing, upon written request of either party, for good cause shown and after consideration of any prejudice to other parties.

(c) *Respondent's pre-hearing submission.* In accordance with the schedule set by the Presiding Officer, the respondent shall file a memorandum stating and supporting respondent's position on the facts, law and relief. The memorandum must identify each factual allegation and all issues regarding the appropriateness of the terms of the relief in the initial order that respondent contests and for which respondent requests a hearing. The memorandum must clearly state respondent's position with respect to each such issue. Respondent must also include any proposals for modification of the order. The memorandum shall also present any arguments on the legal conclusions contained in the order.

(d) *Written questions to EPA.* The respondent may file a request with the Presiding Officer for permission to submit written questions to the EPA Regional Office issuing the order concerning issues of material fact in the order.

(1) Requests shall be accompanied by the proposed questions. In most instances, no more than twenty-five (25) questions, including subquestions and subparts, may be posed. The request and questions must be submitted to the Presiding Officer at least twenty-one (21) days before the hearing.

(2) The Presiding Officer may direct EPA to respond to such questions as he designates. In deciding whether or not to direct the Agency to respond to written questions the Presiding Officer should consider whether such responses are required for full disclosure and adequate resolution of the facts. No questions shall be allowed regarding privileged internal communications. The Presiding Officer shall grant, deny, or modify such requests expeditiously. If a request is granted the Presiding Officer may revise questions and may limit the number and scope of questions. Questions may be deleted or revised in the discretion of the Presiding Officer for reasons, which may include the fact

that he finds the questions to be irrelevant, redundant, unnecessary, or an undue burden on the Agency. The Presiding Officer shall transmit the questions as submitted or as modified to EPA. EPA shall respond to the questions within fourteen (14) calendar days of service of the questions by the Presiding Officer, unless an extension is granted.

(e) *Submission of additional information.* The Presiding Officer shall have the discretion to order either party to submit additional information (including but not limited to post-hearing briefs on undeveloped factual, technical, or legal matters) in whatever form he deems appropriate either before, at, or after the hearing. The Presiding Officer may issue subpoenas for the attendance and testimony of persons and the production of relevant papers, books and documents. Since these hearing procedures provide elsewhere that the parties are not to engage in direct or cross-examination of witnesses, the subpoena power is to serve only as an adjunct to the Presiding Officer's authority to ask questions and otherwise take steps to clarify factual matters which are in dispute. Upon request of the respondent the Presiding Officer may, in his discretion, allow submittal by the respondent of additional information in support of its claim, if it is received by the Clerk and petitioner at least five (5) business days before the hearing.

(f) *Location of hearing.* The hearing shall be held in the city in which the relevant EPA Regional Office is located, unless the Presiding Officer determines that there is good cause to hold it in another location.

§ 24.15 Hearing; oral presentations and written submissions by the parties.

(a) The Presiding Officer shall conduct the hearing in a fair and impartial manner, take action to avoid unnecessary delay in the disposition of the proceedings, and maintain order. The Presiding Officer shall permit oral statements on behalf of the respondent and EPA. The Presiding Officer may address questions to the respondent's or the EPA's representative(s) during the hearing. Each party shall ensure that a representative(s) is (are) present at the hearing, who is (are) capable of responding to questions and articulating that party's position on the law and facts at issue. Apart from questions by the Presiding Officer, no direct examination or cross-examination shall be allowed.

(b) Upon commencement of the hearing, a representative of EPA shall introduce the order and record supporting issuance of the order, and summarize the basis for the order. The respondent may respond to the administrative record and offer any facts, statements, explanations or documents which bear on any issue for which the hearing has been requested. Any such presentation by respondent may include new documents only to the extent that respondent can demonstrate that, through no fault of its own, such documents could not have been submitted before hearing in accordance with the requirements of § 24.14 (c) and (e). The Agency may then present matters solely in rebuttal to matters previously presented by the respondent. The Presiding Officer may allow the respondent to respond to any such rebuttal submitted. The Presiding Officer may exclude repetitive or irrelevant matter. The Presiding Officer may upon request grant petitioner leave to respond to submissions made by respondent pursuant to this paragraph or § 24.14(e).

§ 24.16 Transcript or recording of hearing.

(a) The hearing shall be either transcribed stenographically or tape recorded. Upon written request, such transcript or tape recording shall be made available for inspection or copying.

(b) The transcript or recording of the hearing and all written submittals filed with the Clerk by the parties subsequent to initial issuance of the order including post-hearing submissions will become part of the administrative record for the proceeding, for consideration by the Presiding Officer and Regional Administrator.

§ 24.17 Presiding Officer's recommendation.

(a) The Presiding Officer will, as soon as practicable after the conclusion of

the hearing, evaluate the entire administrative record and, on the basis of the administrative record, prepare and file a recommended decision with the Regional Administrator. The recommended decision must address all material issues of fact or law properly raised by respondent, and must recommend that the order be modified, withdrawn or issued without modification. The recommended decision must provide an explanation, with citation to material contained in the record for any decision to modify a term of the order, to issue the order without change or to withdraw the order. The recommended decision shall be based on the administrative record. If the Presiding Officer finds that any contested relief provision in the order is not supported by a preponderance of the evidence in the record, the Presiding Officer shall recommend that the order be modified and issued on terms that are supported by the record, or withdrawn.

(b) At any time within twenty-one (21) days of service of the recommended decision on the parties, the parties may file comments on the recommended decision with the Clerk. The Clerk shall promptly transmit any such comments received to the Regional Administrator for his consideration in reaching a final decision.

Subpart D—Post-Hearing Procedures

§24.18 Final decision.

As soon as practicable after receipt of the recommended decision, the Regional Administrator will either sign or modify such recommended decision, and issue it as a final decision. If the Regional Administrator modifies the recommended decision, he shall insure that the final decision indicates the legal and factual basis for the decision as modified. The Regional Administrator's decision shall be based on the administrative record.

§24.19 Final order.

If the Regional Administrator does not adopt portions of the initial order, or finds that modification of the order is necessary, the signatory official on the initial administrative order shall modify the order in accordance with the terms of the final decision and file and serve a copy of the final administrative order. If the Regional Administrator finds the initial order appropriate as originally issued, the final decision shall declare the initial administrative order to be a final order, effective upon service of the final decision. If the Regional Administrator declares that the initial order must be withdrawn, the signatory official on the initial administrative order will file and serve a withdrawal of the initial administrative order. This may be done without prejudice.

§24.20 Final agency action.

The final decision and the final administrative order are final agency actions that are effective on filing and service. These actions are not appealable to the Administrator.

PART 25—PUBLIC PARTICIPATION IN PROGRAMS UNDER THE RESOURCE CONSERVATION AND RECOVERY ACT, THE SAFE DRINKING WATER ACT, AND THE CLEAN WATER ACT

Sec.

25.1 Introduction.
25.2 Scope.
25.3 Policy and objectives.
25.4 Information, notification, and consultation responsibilities.
25.5 Public hearings.
25.6 Public meetings.
25.7 Advisory groups.
25.8 Responsiveness summaries.
25.9 Permit enforcement.
25.10 Rulemaking.
25.11 Work elements in financial assistance agreements.
25.12 Assuring compliance with public participation requirements.
25.13 Coordination and non-duplication.
25.14 Termination of reporting requirements.

AUTHORITY: Sec. 101(e), Clean Water Act, as amended (33 U.S.C. 1251(e)); sec. 7004(b), Resource Conservation and Recovery Act (42 U.S.C. 6974(b)); sec. 1450(a)(1), Safe Drinking Water Act, as amended (42 U.S.C. 300j–9).

SOURCE: 44 FR 10292, Feb. 16, 1979, unless otherwise noted.

§ 25.1 Introduction.

This part sets forth minimum requirements and suggested program elements for public participation in activities under the Clean Water Act (Pub. L. 95–217), the Resource Conservation and Recovery Act (Pub. L. 94–580), and the Safe Drinking Water Act (Pub. L. 93–523). The applicability of the requirements of this part is as follows:

(a) Basic requirements and suggested program elements for public information, public notification, and public consultation are set forth in § 25.4. These requirements are intended to foster public awareness and open processes of government decisionmaking. They are applicable to all covered activities and programs described in § 25.2(a).

(b) Requirements and suggested program elements which govern the structure of particular public participation mechanisms (for example, advisory groups and responsiveness summaries) are set forth in §§ 25.5, 25.6, 25.7, and 25.8. This part does not mandate the use of these public participation mechanisms. It does, however, set requirements which those responsible for implementing the mechanisms must follow if the mechanisms are required elsewhere in this chapter.

(c) Requirements which apply to Federal financial assistance programs (grants and cooperative agreements) under the three acts are set forth in §§ 25.10 and 25.12(a).

(d) Requirements for public involvement which apply to specific activities are set forth in § 25.9 (Permit enforcement), § 25.10 (Rulemaking), and § 25.12 (Assuring compliance with requirements).

§ 25.2 Scope.

(a) The activities under the three Acts which are covered by this part are:

(1) EPA rulemaking, except non-policy rulemaking (for example publication of funding allotments under statutory formulas); and State rulemaking under the Clean Water Act and Resource Conservation and Recovery Act;

(2) EPA issuance and modification of permits, and enforcement of permits as delineated by § 25.9;

(3) Development by EPA of major informational materials, such as citizen guides or handbooks, which are expected to be used over several years and which are intended to be widely distributed to the public;

(4) Development by EPA of strategy and policy guidance memoranda when a Deputy Assistant Administrator determines it to be appropriate;

(5) Development and implementation of plans, programs, standards, construction, and other activities supported with EPA financial assistance (grants and cooperative agreements) to State, interstate, regional and local agencies (herein after referred to as ''State, interstate, and substate agencies'');

(6) The process by which EPA makes a determination regarding approval of State administration of the Construction Grants program in lieu of Federal administration; and the administration of the Construction Grants Program by the State after EPA approval;

(7) The process by which EPA makes a determination regarding approval of State administration of the following programs in lieu of Federal administration: The State Hazardous Waste Program; the NPDES Permit Program; the Dredge and Fill Permit Program; and the Underground Injection Control Program;

(8) Other activities which the Assistant Administrator for Water and Waste Management, the Assistant Administrator for Enforcement, or any EPA Regional Administrator deems appropriate in view of the Agency's responsibility to involve the public in significant decisions.

(b) Activities which are not covered by this part, except as otherwise provided under (a)(8) or (c) of this section, are activities under Parts 33 (Subagreements), 39 (Loan Guarantees for Construction of Treatment Works), 40 (Research and Development Grants), 45 (Training Grants and Manpower Forecasting) and 46 (Fellowships) of this chapter.

(c) Some programs covered by these regulations contain further provisions concerning public participation. These are found elsewhere in this chapter in provisions which apply to the program of interest. Regulations which govern

the use and release of public information are set forth in part 2 of this chapter.

(d) Specific provisions of court orders which conflict with requirements of this part, such as court-established timetables, shall take precedence over the provisions in this part.

(e) Where the State undertakes functions in the construction grants program, the State shall be responsible for meeting these requirements for public participation, and any applicable public participation requirements found elsewhere in this chapter, to the same extent as EPA.

(f) Where the State undertakes functions in those programs specifically cited in §25.2(a)(7), the State shall be responsible for meeting the requirements for public participation included in the applicable regulations governing those State programs. The requirements for public participation in State Hazardous Waste Programs, Dredge and Fill Permit programs, Underground Injection Control programs and NPDES permit programs are found in part 123 of this chapter. These regulations embody the substantive requirements of this part.

(g) These regulations apply to the activities of all agencies receiving EPA financial assistance which is awarded after [the effective date of final regulations], and to all other covered activities of EPA, State, interstate, and substate agencies which occur after that date. These regulations will apply to ongoing grants or other covered activities upon any significant change in the activity (for example, upon a significant proposed increase in project scope of a construction grant). Parts 105 (Public Participation in Water Pollution Control) and 249 (Public Participation in Solid Waste Management) will no longer appear in the Code of Federal Regulations; however, they will remain applicable, in uncodified form, to grants awarded prior to the effective date of this part and to all other ongoing activities.

§25.3 Policy and objectives.

(a) EPA, State, interstate, and substate agencies carrying out activities described in §25.2(a) shall provide for, encourage, and assist the participation of the public. The term, ''the public'' in the broadest sense means the people as a whole, the general populace. There are a number of identifiable ''segments of the public'' which may have a particular interest in a given program or decision. Interested and affected segments of the public may be affected directly by a decision, either beneficially or adversely; they may be affected indirectly; or they may have some other concern about the decision. In addition to private citizens, the public may include, among others, representatives of consumer, environmental, and minority associations; trade, industrial, agricultural, and labor organizations; public health, scientific, and professional societies; civic associations; public officials; and governmental and educational associations.

(b) Public participation is that part of the decision-making process through which responsible officials become aware of public attitudes by providing ample opportunity for interested and affected parties to communicate their views. Public participation includes providing access to the decision-making process, seeking input from and conducting dialogue with the public, assimilating public viewpoints and preferences, and demonstrating that those viewpoints and preferences have been considered by the decision-making official. Disagreement on significant issues is to be expected among government agencies and the diverse groups interested in and affected by public policy decisions. Public agencies should encourage full presentation of issues at an early stage so that they can be resolved and timely decisions can be made. In the course of this process, responsible officials should make special efforts to encourage and assist participation by citizens representing themselves and by others whose resources and access to decision-making may be relatively limited.

(c) The following are the objectives of EPA, State, interstate, and substate agencies in carrying out activities covered by this part:

(1) To assure that the public has the opportunity to understand official programs and proposed actions, and that the government fully considers the public's concerns;

(2) To assure that the government does not make any significant decision on any activity covered by this part without consulting interested and affected segments of the public;

(3) To assure that government action is as responsive as possible to public concerns;

(4) To encourage public involvement in implementing environmental laws;

(5) To keep the public informed about significant issues and proposed project or program changes as they arise;

(6) To foster a spirit of openness and mutual trust among EPA, States, substate agencies and the public; and

(7) To use all feasible means to create opportunities for public participation, and to stimulate and support participation.

§ 25.4 Information, notification, and consultation responsibilities.

(a) *General.* EPA, State, interstate, and substate agencies shall conduct a continuing program for public information and participation in the development and implementation of activities covered by this part. This program shall meet the following requirements:

(b) *Information and assistance requirements.* (1) Providing information to the public is a necessary prerequisite to meaningful, active public involvement. Agencies shall design informational activities to encourage and facilitate the public's participation in all significant decisions covered by § 25.2(a), particularly where alternative courses of action are proposed.

(2) Each agency shall provide the public with continuing policy, program, and technical information and assistance beginning at the earliest practicable time. Informational materials shall highlight significant issues that will be the subject of decision-making. Whenever possible, consistent with applicable statutory requirements, the social, economic, and environmental consequences of proposed decisions shall be clearly stated in such material. Each agency shall identify segments of the public likely to be affected by agency decisions and should consider targeting informational materials toward them (in addition to the materials directed toward the general public). Lengthy documents and complex technical materials that relate to significant decisions should be summarized for public and media uses. Fact sheets, news releases, newsletters, and other similar publications may be used to provide notice that materials are available and to facilitate public understanding of more complex documents, but shall not be a substitute for public access to the full documents.

(3) Each agency shall provide one or more central collections of reports, studies, plans, and other documents relating to controversial issues or significant decisions in a convenient location or locations, for example, in public libraries. Examples of such documents are catalogs of documents available from the agency, grant applications, fact sheets on permits and permit applications, permits, effluent discharge information, and compliance schedule reports. Copying facilities at reasonable cost should be available at the depositories.

(4) Whenever possible, agencies shall provide copies of documents of interest to the public free of charge. Charges for copies should not exceed prevailing commercial copying costs. EPA requirements governing charges for information and documents provided to the public in response to requests made under the Freedom of Information Act are set forth in part 2 of this chapter. Consistent with the objectives of § 25.3(b), agencies may reserve their supply of free copies for private citizens and others whose resources are limited.

(5) Each agency shall develop and maintain a list of persons and organizations who have expressed an interest in or may, by the nature of their purposes, activities or members, be affected by or have an interest in any covered activity. Generally, this list will be most useful where subdivided by area of interest or geographic area. Whenever possible, the list should include representatives of the several categories of interests listed under § 25.3(a). Those on the list, or relevant portions if the list is subdivided, shall receive timely and periodic notification of the availability of materials under § 25.4(b)(2).

(c) *Public notification.* Each agency shall notify interested and affected

parties, including appropriate portions of the list required by paragraph (b)(5) of this section, and the media in advance of times at which major decisions not covered by notice requirements for public meetings or public hearings are being considered. Generally, notices should include the timetable in which a decision will be reached, the issues under consideration, any alternative courses of action or tentative determinations which the agency has made, a brief listing of the applicable laws or regulations, the location where relevant documents may be reviewed or obtained, identification of any associated public participation opportunities such as workshops or meetings, the name of an individual to contact for additional information, and any other appropriate information. All advance notifications under this paragraph must be provided far enough in advance of agency action to permit time for public response; generally this should not be less than 30 days.

(d) *Public consultation.* For the purposes of this part, ''public consultation'' means an exchange of views between governmental agencies and interested or affected persons and organizations in order to meet the objectives set forth in §25.3. Requirements for three common forms of public consultation (public hearings, public meetings, and advisory groups) are set forth in §§25.5, 25.6, and 25.7. Other less formal consultation mechanisms may include but are not limited to review groups, ad hoc committees, task forces, workshops, seminars and informal personal communications with individuals and groups. Public consultation must be preceded by timely distribution of information and must occur sufficiently in advance of decision-making to allow the agency to assimilate public views into agency action. EPA, State, interstate, and substate agencies shall provide for early and continuing public consultation in any significant action covered by this part. Merely conferring with the public after an agency decision does not meet this requirement. In addition to holding hearings and meetings as specifically required in this chapter, a hearing or meeting shall be held if EPA, the State, interstate, or substate agency determines that there is significant public interest or that a hearing or meeting would be useful.

(e) *Public information concerning legal proceedings.* EPA, State, interstate, and substate agencies shall provide full and open information on legal proceedings to the extent not inconsistent with court requirements, and where such disclosure would not prejudice the conduct of the litigation. EPA actions with regard to affording opportunities for public comment before the Department of Justice consents to a proposed judgment in an action to enjoin discharges of pollutants into the environment shall be consistent with the Statement of Policy issued by the Department of Justice (see Title 28, CFR, Chapter 1, §50.7).

§25.5 Public hearings.

(a) *Applicability.* Any non-adjudicatory public hearing, whether mandatory or discretionary, under the three Acts shall meet the following minimum requirements. These requirements are subordinate to any more stringent requirements found elsewhere in this chapter or otherwise imposed by EPA, State, interstate, or substate agencies. Procedures developed for adjudicatory hearings required by this chapter shall be consistent with the public participation objectives of this part, to the extent practicable.

(b) *Notice.* A notice of each hearing shall be well publicized, and shall also be mailed to the appropriate portions of the list of interested and affected parties required by §25.4(b)(5). Except as otherwise specifically provided elsewhere in this chapter, these actions must occur at least 45 days prior to the date of the hearing. However, where EPA determines that there are no substantial documents which must be reviewed for effective hearing participation and that there are no complex or controversial matters to be addressed by the hearing, the notice requirement may be reduced to no less than 30 days. EPA may further reduce or waive the hearing notice requirement in emergency situations where EPA determines that there is an imminent danger to public health. To the extent not duplicative, the agency holding the

hearing shall also provide informal notice to all interested persons or organizations that request it. The notice shall identify the matters to be discussed at the hearing and shall include or be accompanied by a discussion of the agency's tentative determination on major issues (if any), information on the availability of a bibliography of relevant materials (if deemed appropriate), and procedures for obtaining further information. Reports, documents and data relevant to the discussion at the public hearing shall be available to the public at least 30 days before the hearing. Earlier availability of materials relevant to the hearing will further assist public participation and is encouraged where possible.

(c) *Locations and time.* Hearings must be held at times and places which, to the maximum extent feasible, facilitate attendance by the public. Accessibility of public transportation, and use of evening and weekend hearings, should be considered. In the case of actions with Statewide interest, holding more than one hearing should be considered.

(d) *Scheduling presentations.* The agency holding the hearing shall schedule witnesses in advance, when necessary, to ensure maximum participation and allotment of adequate time for all speakers. However, the agency shall reserve some time for unscheduled testimony and may consider reserving blocks of time for major categories of witnesses.

(e) *Conduct of hearing.* The agency holding the hearing shall inform the audience of the issues involved in the decision to be made, the considerations the agency will take into account, the agency's tentative determinations (if any), and the information which is particularly solicited from the public. The agency should consider allowing a question and answer period. Procedures shall not unduly inhibit free expression of views (for example, by onerous written statement requirements or qualification of witnesses beyond minimum identification).

(f) *Record.* The agency holding the hearing shall prepare a transcript, recording or other complete record of public hearing proceedings and make it available at no more than cost to anyone who requests it. A copy of the record shall be available for public review.

§ 25.6 Public meetings.

Public meetings are any assemblies or gathering, (such as conferences, informational sessions, seminars, workshops, or other activities) which the responsible agency intends to be open to anyone wishing to attend. Public meetings are less formal than public hearings. They do not require formal presentations, scheduling of presentations and a record of proceedings. The requirements of § 25.5 (b) and (c) are applicable to public meetings, except that the agency holding the meeting may reduce the notice to not less than 30 days if there is good reason that longer notice cannot be provided.

§ 25.7 Advisory groups.

(a) *Applicability.* The requirements of this section on advisory groups shall be met whenever provisions of this chapter require use of an advisory group by State, interstate, or substate agencies involved in activities supported by EPA financial assistance under any of the three Acts.

(b) *Role.* Primary responsibility for decision-making in environmental programs is vested by law in the elected and appointed officials who serve on public bodies and agencies at various levels of government. However, all segments of the public must have the opportunity to participate in environmental quality planning. Accordingly, where EPA identifies a need for continued attention of an informed core group of citizens in relation to activities conducted with EPA financial assistance, program regulations elsewhere in this chapter will require an advisory group to be appointed by the financially assisted agency. Such advisory groups will not be the sole mechanism for public participation, but will complement other mechanisms. They are intended to assist elected or appointed officials with final decision-making responsibility by making recommendations to such officials on important issues. In addition, advisory groups should foster a constructive interchange among the various interests present on the group and enhance

the prospect of community acceptance of agency action.

(c) *Membership.* (1) The agency receiving financial assistance shall assure that the advisory group reflects a balance of interests in the affected area. In order to meet this requirement, the assisted agency shall take positive action, in accordance with paragraph (c)(3) of this section, to establish an advisory group which consists of substantially equivalent proportions of the following four groups:

(i) *Private citizens.* No person may be included in this portion of the advisory group who is likely to incur a financial gain or loss greater than that of an average homeowner, taxpayer or consumer as a result of any action likely to be taken by the assisted agency.

(ii) *Representatives of public interest groups.* A ''public interest group'' is an organization which reflects a general civic, social, recreational, environmental or public health perspective in the area and which does not directly reflect the economic interests of its membership.

(iii) Public officials.

(iv) Citizens or representatives of organizations with substantial economic interests in the plan or project.

(2) Generally, where the activity has a particular geographic focus, the advisory group shall be made up of persons who are residents of that geographic area.

(3) In order to meet the advisory group membership requirements of paragraph (c)(1) of this section, the assisted agency shall:

(i) Identify public interest groups, economic interests, and public officials who are interested in or affected by the assisted activity.

(ii) Make active efforts to inform citizens in the affected area, and the persons or groups identified under paragraph (c)(3)(i) of this section, of this opportunity for participation on the advisory group. This may include such actions as placing notices or announcements in the newspapers or other media, mailing written notices to interested parties, contacting organizations or individuals directly, requesting organizations to notify their members through meetings, newsletters, or other means.

(iii) Where the membership composition set forth in paragraph (c)(1) of this section is not met after the above actions, the assisted agency shall identify the causative problems and make additional efforts to overcome such problems. For example, the agency should make personal contact with prospective participants to invite their participation.

(iv) Where problems in meeting the membership composition arise, the agency should request advice and assistance from EPA.

(d) The assisted agency shall record the names and mailing addresses of each member of the advisory group, with the attributes of each in relation to the membership requirements set forth in paragraph (c)(1) of this section, provide a copy to EPA, and make the list available to the public. In the event that the membership requirements set forth in paragraph (c)(1) of this section are not met, the assisted agency shall append to the list a description of its efforts to comply with those requirements and an explanation of the problems which prevented compliance. EPA shall review the agency's efforts to comply and approve the advisory group composition or, if the agency's efforts were inadequate, require additional actions to achieve the required membership composition.

(e) *Responsibilities of the assisted agency.* (1) The assisted agency shall designate a staff contact who will be responsible for day-to-day coordination among the advisory group, the agency, and any agency contractors or consultants. The financial assistance agreement shall include a budget item for this staff contact. Where substantial portions of the assisted agency's responsibilities will be met under contract, the agency shall require a similar designation, and budget specification, of its contractor. In the latter event, the assisted agency does not have to designate a separate staff contact on its own staff, if the Regional Administrator determines that the contractor's designation will result in adequate coordination. The staff contact shall be located in the project area.

(2) The assisted agency has such responsibilities as providing the advisory group with information, identifying issues for the advisory group's consideration, consulting with the advisory group throughout the project, requesting the advisory group's recommendations prior to major decisions, transmitting advisory group recommendations to decision-making officials, and making written responses to any formal recommendation by the advisory group. The agency shall make any such written responses available to the public. To the maximum extent feasible, the assisted agency shall involve the advisory group in the development of the public participation program.

(3) The assisted agency shall identify professional and clerical staff time which the advisory group may depend upon for assistance, and provide the advisory group with an operating budget which may be used for technical assistance and other purposes agreed upon between the advisory group and the agency.

(4) The assisted agency shall establish a system to make costs of reasonable out-of-pocket expenses of advisory group participation available to group members. Time away from work need not be reimbursed; however, assisted agencies are encouraged to schedule meetings at times and places which will not require members to leave their jobs to attend.

(f) *Advisory group responsibilities and duties.* The advisory group may select its own chairperson, adopt its own rules of order, and schedule and conduct its own meetings. Advisory group meetings shall be announced well in advance and shall be open to the public. At all meetings, the advisory group shall provide opportunity for public comment. Any minutes of advisory group meetings and recommendations to the assisted agency shall be available to the public. The advisory group should monitor the progress of the project and become familiar with issues relevant to project development. In the event the assisted agency and the advisory group agree that the advisory group will assume public participation responsibilities, the group should undertake those responsibilities promptly. The advisory group should make written recommendations directly to the assisted agency and to responsible decision-making officials on major decisions (including approval of the public participation program) and respond to any requests from the agency or decision-making officials for recommendations. The advisory group should remain aware of community attitudes and responses to issues as they arise. As part of this effort, the advisory group may, within the limitations of available resources, conduct public participation activities in conjunction with the assisted agency; solicit outside advice; and establish, in conjunction with the assisted agency, subcommittees, ad hoc groups, or task forces to investigate and develop recommendations on particular issues as they arise. The advisory group should undertake its responsibilities fully and promptly in accordance with the policies and requirements of this part. Nothing shall preclude the right of the advisory group from requesting EPA to perform an evaluation of the assisted agency's compliance with the requirements of this part.

(g) *Training and assistance.* EPA will promptly provide appropriate written guidance and project information to the newly formed advisory group and may provide advice and assistance to the group throughout the life of the project. EPA will develop and, in conjunction with the State or assisted agency, carry out a program to provide a training session for the advisory group, and appropriate assisted agency representatives, promptly after the advisory group is formed. The assisted agency shall provide additional needed information or assistance to the advisory group.

§ 25.8 Responsiveness summaries.

Each agency which conducts any activities required under this part shall prepare a Responsiveness Summary at specific decision points as specified in program regulations or in the approved public participation work plan. Responsiveness Summaries are also required for rulemaking activities under § 25.10. Each Responsiveness Summary shall identify the public participation activity conducted; describe the matters on which the public was consulted;

summarize the public's views, significant comments, criticisms and suggestions; and set forth the agency's specific responses in terms of modifications of the proposed action or an explanation for rejection of proposals made by the public. Responsiveness Summaries prepared by agencies receiving EPA financial assistance shall also include evaluations by the agency of the effectiveness of the public participation program. Assisted agencies shall request such evaluations from any advisory group and provide an opportunity for other participating members of the public to contribute to the evaluation. (In the case of programs with multiple responsiveness summary requirements, these analyses need only be prepared and submitted with the final summary required.) Responsiveness summaries shall be forwarded to the appropriate decision-making official and shall be made available to the public. Responsiveness Summaries shall be used as part of evaluations required under this part or elsewhere in this chapter.

§25.9 Permit enforcement.

Each agency administering a permit program shall develop internal procedures for receiving evidence submitted by citizens about permit violations and ensuring that it is properly considered. Public effort in reporting violations shall be encouraged, and the agency shall make available information on reporting procedures. The agency shall investigate alleged violations promptly.

§25.10 Rulemaking.

(a) EPA shall invite and consider written comments on proposed and interim regulations from any interested or affected persons and organizations. All such comments shall be part of the public record, and a copy of each comment shall be available for public inspection. EPA will maintain a docket of comments received and any Agency responses. Notices of proposed and interim rulemaking, as well as final rules and regulations, shall be distributed in accordance with §25.4(c) to interested or affected persons promptly after publication. Each notice shall include information as to the availability of the full texts of rules and regulations (where these are not set forth in the notice itself) and places where copying facilities are available at reasonable cost to the public. Under Executive Order 12044 (March 23, 1978), further EPA guidance will be issued concerning public participation in EPA rulemaking. A Responsiveness Summary shall be published as part of the preamble to interim and final regulations. In addition to providing opportunity for written comments on proposed and interim regulations, EPA may choose to hold a public hearing.

(b) State rulemaking specified in §25.2(a)(1) shall be in accord with the requirements of paragraph (a) of this section or with the State's administrative procedures act, if one exists. However, in the event of conflict between a provision of paragraph (a) of this section and a provision of a State's administrative procedures act, the State's law shall apply.

§25.11 Work elements in financial assistance agreements.

(a) This section is applicable to activities under §25.2(a)(5) except as otherwise provided in parts 30 or 35.

(b) Each applicant for EPA financial assistance shall set forth in the application a public participation work plan or work element which reflects how public participation will be provided for, encouraged, and assisted in accordance with this part. This work plan or element shall cover the project period. At a minimum, the work plan or element shall include:

(1) Staff contacts and budget resources to be devoted to public participation by category;

(2) A proposed schedule for public participation activities to impact major decisions, including consultation points where responsiveness summaries will be prepared;

(3) An identification of consultation and information mechanisms to be used;

(4) The segments of the public targeted for involvement.

(c) All reasonable costs of public participation incurred by assisted agencies which are identified in an approved public participation work plan or element, or which are otherwise approved

by EPA, shall be eligible for financial assistance.

(d) The work plan or element may be revised as necessary throughout the project period with approval of the Regional Administrator.

§ 25.12 Assuring compliance with public participation requirements.

(a) *Financial assistance programs*—(1) *Applications.* EPA shall review the public participation work plan (or, if no work plan is required by this chapter for the particular financial assistance agreement, the public participation element) included in the application to determine consistency with all policies and requirements of this part. No financial assistance shall be awarded unless EPA is satisfied that the public participation policies and requirements of this part and, any applicable public participation requirements found elsewhere in this chapter, will be met.

(2) *Compliance*—(i) *Evaluation.* EPA shall evaluate compliance with public participation requirements using the work plan, responsiveness summary, and other available information. EPA will judge the adequacy of the public participation effort in relation to the objectives and requirements of § 25.3 and § 25.4 and other applicable requirements. In conducting this evaluation, EPA may request additional information from the assisted agency, including records of hearings and meetings, and may invite public comment on the agency's performance. The evaluation will be undertaken as part of any mid-project review required in various programs under this chapter; where no such review is required the review shall be conducted at an approximate midpoint in continuing EPA oversight activity. EPA may, however, undertake such evaluation at any point in the project period, and will do so whenever it believes that an assisted agency may have failed to meet public participation requirements.

(ii) *Remedial actions.* Whenever EPA determines that an assisted agency has not fully met public participation requirements, EPA shall take actions which it deems appropriate to mitigate the adverse effects of the failure and assure that the failure is not repeated. For ongoing projects, that action shall include, at a minimum, imposing more stringent requirements on the assisted agency for the next budget period or other period of the project (including such actions as more specific output requirements and milestone schedules for output achievement; interim EPA review of public participation activities and materials prepared by the agency, and phased release of funds based on compliance with milestone schedules.) EPA may terminate or suspend part or all financial assistance for non-compliance with public participation requirements, and may take any further actions that it determines to be appropriate in accordance with parts 30 and 35 of this chapter (see, in particular, §§ 30.340, Noncompliance and 30.615–3, Withholding of Payments, and subpart H of part 30, Modification, Suspension, and Termination).

(b) *State programs approved in lieu of Federal programs.* State compliance with applicable public participation requirements in programs specified in § 25.2(a) (6) and (7) and administered by approved States shall be monitored by EPA during the annual review of the State's program, and during any financial or program audit or review of these programs. EPA may withdraw an approved program from a State for failure to comply with applicable public participation requirements.

(c) *Other covered programs.* Assuring compliance with these public participation requirements for programs not covered by paragraphs (a) and (b) of this section is the responsibility of the Administrator of EPA. Citizens with information concerning alleged failures to comply with the public participation requirements should notify the Administrator. The Administrator will assure that instances of alleged non-compliance are promptly investigated and that corrective action is taken where necessary.

§ 25.13 Coordination and non-duplication.

The public participation activities and materials that are required under this part should be coordinated or combined with those of closely related programs or activities wherever this will

enhance the economy, the effectiveness, or the timeliness of the effort; enhance the clarity of the issue; and not be detrimental to participation by the widest possible public. Hearings and meetings on the same matter may be held jointly by more than one agency where this does not conflict with the policy of this paragraph. Special efforts shall be made to coordinate public participation procedures under this part and applicable regulations elsewhere in this chapter with environmental assessment and analysis procedures under 40 CFR part 6. EPA encourages interstate agencies in particular to develop combined proceedings for the States concerned.

§25.14 Termination of reporting requirements.

All reporting requirements specifically established by this part will terminate on (5 years from date of publication) unless EPA acts to extend the requirements beyond that date.

PART 26—PROTECTION OF HUMAN SUBJECTS

Sec.

26.101 To what does this policy apply?
26.102 Definitions.
26.103 Assuring compliance with this policy—research conducted or supported by any Federal Department or Agency.
26.104 [Reserved]
26.105 [Reserved]
26.106 [Reserved]
26.107 IRB Membership.
26.108 IRB functions and operations.
26.109 IRB review of research.
26.110 Expedited review procedures for certain kinds of research involving no more than minimal risk, and for minor changes in approved research.
26.111 Criteria for IRB approval of research.
26.112 Review by institution.
26.113 Suspension or termination of IRB approval of research.
26.114 Cooperative research.
26.115 IRB records.
26.116 General requirements for informed consent.
26.117 Documentation of informed consent.
26.118 Applications and proposals lacking definite plans for involvement of human subjects.
26.119 Research undertaken without the intention of involving human subjects.
26.120 Evaluation and disposition of applications and proposals for research to be conducted or supported by a Federal Department or Agency.
26.121 [Reserved]
26.122 Use of Federal funds.
26.123 Early termination of research support: Evaluation of applications and proposals.
26.124 Conditions.

AUTHORITY: 5 U.S.C. 301; 42 U.S.C. 300v–1(b).

SOURCE: 56 FR 28012, 28022, June 18, 1991, unless otherwise noted.

§26.101 To what does this policy apply?

(a) Except as provided in paragraph (b) of this section, this policy applies to all research involving human subjects conducted, supported or otherwise subject to regulation by any federal department or agency which takes appropriate administrative action to make the policy applicable to such research. This includes research conducted by federal civilian employees or military personnel, except that each department or agency head may adopt such procedural modifications as may be appropriate from an administrative standpoint. It also includes research conducted, supported, or otherwise subject to regulation by the federal government outside the United States.

(1) Research that is conducted or supported by a federal department or agency, whether or not it is regulated as defined in §26.102(e), must comply with all sections of this policy.

(2) Research that is neither conducted nor supported by a federal department or agency but is subject to regulation as defined in §26.102(e) must be reviewed and approved, in compliance with §26.101, §26.102, and §26.107 through §26.117 of this policy, by an institutional review board (IRB) that operates in accordance with the pertinent requirements of this policy.

(b) Unless otherwise required by department or agency heads, research activities in which the only involvement of human subjects will be in one or more of the following categories are exempt from this policy:

(1) Research conducted in established or commonly accepted educational settings, involving normal educational practices, such as (i) research on regular and special education instructional

strategies, or (ii) research on the effectiveness of or the comparison among instructional techniques, curricula, or classroom management methods.

(2) Research involving the use of educational tests (cognitive, diagnostic, aptitude, achievement), survey procedures, interview procedures or observation of public behavior, unless:

(i) Information obtained is recorded in such a manner that human subjects can be identified, directly or through identifiers linked to the subjects; and (ii) any disclosure of the human subjects' responses outside the research could reasonably place the subjects at risk of criminal or civil liability or be damaging to the subjects' financial standing, employability, or reputation.

(3) Research involving the use of educational tests (cognitive, diagnostic, aptitude, achievement), survey procedures, interview procedures, or observation of public behavior that is not exempt under paragraph (b)(2) of this section, if:

(i) The human subjects are elected or appointed public officials or candidates for public office; or (ii) federal statute(s) require(s) without exception that the confidentiality of the personally identifiable information will be maintained throughout the research and thereafter.

(4) Research, involving the collection or study of existing data, documents, records, pathological specimens, or diagnostic specimens, if these sources are publicly available or if the information is recorded by the investigator in such a manner that subjects cannot be identified, directly or through identifiers linked to the subjects.

(5) Research and demonstration projects which are conducted by or subject to the approval of department or agency heads, and which are designed to study, evaluate, or otherwise examine:

(i) Public benefit or service programs; (ii) procedures for obtaining benefits or services under those programs; (iii) possible changes in or alternatives to those programs or procedures; or (iv) possible changes in methods or levels of payment for benefits or services under those programs.

(6) Taste and food quality evaluation and consumer acceptance studies, (i) if wholesome foods without additives are consumed or (ii) if a food is consumed that contains a food ingredient at or below the level and for a use found to be safe, or agricultural chemical or environmental contaminant at or below the level found to be safe, by the Food and Drug Administration or approved by the Environmental Protection Agency or the Food Safety and Inspection Service of the U.S. Department of Agriculture.

(c) Department or agency heads retain final judgment as to whether a particular activity is covered by this policy.

(d) Department or agency heads may require that specific research activities or classes of research activities conducted, supported, or otherwise subject to regulation by the department or agency but not otherwise covered by this policy, comply with some or all of the requirements of this policy.

(e) Compliance with this policy requires compliance with pertinent federal laws or regulations which provide additional protections for human subjects.

(f) This policy does not affect any state or local laws or regulations which may otherwise be applicable and which provide additional protections for human subjects.

(g) This policy does not affect any foreign laws or regulations which may otherwise be applicable and which provide additional protections to human subjects of research.

(h) When research covered by this policy takes place in foreign countries, procedures normally followed in the foreign countries to protect human subjects may differ from those set forth in this policy. [An example is a foreign institution which complies with guidelines consistent with the World Medical Assembly Declaration (Declaration of Helsinki amended 1989) issued either by sovereign states or by an organization whose function for the protection of human research subjects is internationally recognized.] In these circumstances, if a department or agency head determines that the procedures prescribed by the institution afford protections that are at least equivalent to those provided in this policy, the department or agency head

may approve the substitution of the foreign procedures in lieu of the procedural requirements provided in this policy. Except when otherwise required by statute, Executive Order, or the department or agency head, notices of these actions as they occur will be published in the FEDERAL REGISTER or will be otherwise published as provided in department or agency procedures.

(i) Unless otherwise required by law, department or agency heads may waive the applicability of some or all of the provisions of this policy to specific research activities or classes of research activities otherwise covered by this policy. Except when otherwise required by statute or Executive Order, the department or agency head shall forward advance notices of these actions to the Office for Protection from Research Risks, Department of Health and Human Services (HHS), and shall also publish them in the FEDERAL REGISTER or in such other manner as provided in department or agency procedures.[1]

[56 FR 28012, 28022, June 18, 1991, 56 FR 29756, June 28, 1991]

§26.102 Definitions.

(a) *Department or agency head* means the head of any federal department or agency and any other officer or employee of any department or agency to whom authority has been delegated.

(b) *Institution* means any public or private entity or agency (including federal, state, and other agencies).

(c) *Legally authorized representative* means an individual or judicial or other body authorized under applicable law to consent on behalf of a prospective subject to the subject's participation in the procedure(s) involved in the research.

(d) *Research* means a systematic investigation, including research development, testing and evaluation, designed to develop or contribute to generalizable knowledge. Activities which meet this definition constitute research for purposes of this policy, whether or not they are conducted or supported under a program which is considered research for other purposes. For example, some demonstration and service programs may include research activities.

(e) *Research subject to regulation*, and similar terms are intended to encompass those research activities for which a federal department or agency has specific responsibility for regulating as a research activity, (for example, Investigational New Drug requirements administered by the Food and Drug Administration). It does not include research activities which are incidentally regulated by a federal department or agency solely as part of the department's or agency's broader responsibility to regulate certain types of activities whether research or non-research in nature (for example, Wage and Hour requirements administered by the Department of Labor).

(f) *Human subject* means a living individual about whom an investigator (whether professional or student) conducting research obtains

(1) Data through intervention or interaction with the individual, or

(2) Identifiable private information.

Intervention includes both physical procedures by which data are gathered (for example, venipuncture) and manipulations of the subject or the subject's environment that are performed for research purposes. Interaction includes communication or interpersonal contact between investigator and subject. ''Private information'' includes information about behavior that occurs in a context in which an individual can reasonably expect that no observation or recording is taking place, and information which has been provided for specific purposes by an individual and which the individual can reasonably

[1] Institutions with HHS-approved assurances on file will abide by provisions of title 45 CFR part 46 subparts A–D. Some of the other Departments and Agencies have incorporated all provisions of title 45 CFR part 46 into their policies and procedures as well. However, the exemptions at 45 CFR 46.101(b) do not apply to research involving prisoners, fetuses, pregnant women, or human in vitro fertilization, subparts B and C. The exemption at 45 CFR 46.101(b)(2), for research involving survey or interview procedures or observation of public behavior, does not apply to research with children, subpart D, except for research involving observations of public behavior when the investigator(s) do not participate in the activities being observed.

expect will not be made public (for example, a medical record). Private information must be individually identifiable (i.e., the identity of the subject is or may readily be ascertained by the investigator or associated with the information) in order for obtaining the information to constitute research involving human subjects.

(g) *IRB* means an institutional review board established in accord with and for the purposes expressed in this policy.

(h) *IRB approval* means the determination of the IRB that the research has been reviewed and may be conducted at an institution within the constraints set forth by the IRB and by other institutional and federal requirements.

(i) *Minimal risk* means that the probability and magnitude of harm or discomfort anticipated in the research are not greater in and of themselves than those ordinarily encountered in daily life or during the performance of routine physical or psychological examinations or tests.

(j) *Certification* means the official notification by the institution to the supporting department or agency, in accordance with the requirements of this policy, that a research project or activity involving human subjects has been reviewed and approved by an IRB in accordance with an approved assurance.

§ 26.103 Assuring compliance with this policy—research conducted or supported by any Federal Department or Agency.

(a) Each institution engaged in research which is covered by this policy and which is conducted or supported by a federal department or agency shall provide written assurance satisfactory to the department or agency head that it will comply with the requirements set forth in this policy. In lieu of requiring submission of an assurance, individual department or agency heads shall accept the existence of a current assurance, appropriate for the research in question, on file with the Office for Protection from Research Risks, HHS, and approved for federalwide use by that office. When the existence of an HHS-approved assurance is accepted in lieu of requiring submission of an assurance, reports (except certification) required by this policy to be made to department and agency heads shall also be made to the Office for Protection from Research Risks, HHS.

(b) Departments and agencies will conduct or support research covered by this policy only if the institution has an assurance approved as provided in this section, and only if the institution has certified to the department or agency head that the research has been reviewed and approved by an IRB provided for in the assurance, and will be subject to continuing review by the IRB. Assurances applicable to federally supported or conducted research shall at a minimum include:

(1) A statement of principles governing the institution in the discharge of its responsibilities for protecting the rights and welfare of human subjects of research conducted at or sponsored by the institution, regardless of whether the research is subject to federal regulation. This may include an appropriate existing code, declaration, or statement of ethical principles, or a statement formulated by the institution itself. This requirement does not preempt provisions of this policy applicable to department- or agency-supported or regulated research and need not be applicable to any research exempted or waived under § 26.101 (b) or (i).

(2) Designation of one or more IRBs established in accordance with the requirements of this policy, and for which provisions are made for meeting space and sufficient staff to support the IRB's review and recordkeeping duties.

(3) A list of IRB members identified by name; earned degrees; representative capacity; indications of experience such as board certifications, licenses, etc., sufficient to describe each member's chief anticipated contributions to IRB deliberations; and any employment or other relationship between each member and the institution; for example: full-time employee, part-time employee, member of governing panel or board, stockholder, paid or unpaid consultant. Changes in IRB membership shall be reported to the department or agency head, unless in accord

with §26.103(a) of this policy, the existence of an HHS-approved assurance is accepted. In this case, change in IRB membership shall be reported to the Office for Protection from Research Risks, HHS.

(4) Written procedures which the IRB will follow (i) for conducting its initial and continuing review of research and for reporting its findings and actions to the investigator and the institution; (ii) for determining which projects require review more often than annually and which projects need verification from sources other than the investigators that no material changes have occurred since previous IRB review; and (iii) for ensuring prompt reporting to the IRB of proposed changes in a research activity, and for ensuring that such changes in approved research, during the period for which IRB approval has already been given, may not be initiated without IRB review and approval except when necessary to eliminate apparent immediate hazards to the subject.

(5) Written procedures for ensuring prompt reporting to the IRB, appropriate institutional officials, and the department or agency head of (i) any unanticipated problems involving risks to subjects or others or any serious or continuing noncompliance with this policy or the requirements or determinations of the IRB and (ii) any suspension or termination of IRB approval.

(c) The assurance shall be executed by an individual authorized to act for the institution and to assume on behalf of the institution the obligations imposed by this policy and shall be filed in such form and manner as the department or agency head prescribes.

(d) The department or agency head will evaluate all assurances submitted in accordance with this policy through such officers and employees of the department or agency and such experts or consultants engaged for this purpose as the department or agency head determines to be appropriate. The department or agency head's evaluation will take into consideration the adequacy of the proposed IRB in light of the anticipated scope of the institution's research activities and the types of subject populations likely to be involved, the appropriateness of the proposed initial and continuing review procedures in light of the probable risks, and the size and complexity of the institution.

(e) On the basis of this evaluation, the department or agency head may approve or disapprove the assurance, or enter into negotiations to develop an approvable one. The department or agency head may limit the period during which any particular approved assurance or class of approved assurances shall remain effective or otherwise condition or restrict approval.

(f) Certification is required when the research is supported by a federal department or agency and not otherwise exempted or waived under §26.101 (b) or (i). An institution with an approved assurance shall certify that each application or proposal for research covered by the assurance and by §26.103 of this Policy has been reviewed and approved by the IRB. Such certification must be submitted with the application or proposal or by such later date as may be prescribed by the department or agency to which the application or proposal is submitted. Under no condition shall research covered by §26.103 of the Policy be supported prior to receipt of the certification that the research has been reviewed and approved by the IRB. Institutions without an approved assurance covering the research shall certify within 30 days after receipt of a request for such a certification from the department or agency, that the application or proposal has been approved by the IRB. If the certification is not submitted within these time limits, the application or proposal may be returned to the institution.

(Approved by the Office of Management and Budget under control number 9999–0020)

[56 FR 28012, 28022, June 18, 1991, 56 FR 29756, June 28, 1991]

§§26.104—26.106 [Reserved]

§ 26.107 IRB membership.

(a) Each IRB shall have at least five members, with varying backgrounds to promote complete and adequate review of research activities commonly conducted by the institution. The IRB shall be sufficiently qualified through the experience and expertise of its members, and the diversity of the

members, including consideration of race, gender, and cultural backgrounds and sensitivity to such issues as community attitudes, to promote respect for its advice and counsel in safeguarding the rights and welfare of human subjects. In addition to possessing the professional competence necessary to review specific research activities, the IRB shall be able to ascertain the acceptability of proposed research in terms of institutional commitments and regulations, applicable law, and standards of professional conduct and practice. The IRB shall therefore include persons knowledgeable in these areas. If an IRB regularly reviews research that involves a vulnerable category of subjects, such as children, prisoners, pregnant women, or handicapped or mentally disabled persons, consideration shall be given to the inclusion of one or more individuals who are knowledgeable about and experienced in working with these subjects.

(b) Every nondiscriminatory effort will be made to ensure that no IRB consists entirely of men or entirely of women, including the institution's consideration of qualified persons of both sexes, so long as no selection is made to the IRB on the basis of gender. No IRB may consist entirely of members of one profession.

(c) Each IRB shall include at least one member whose primary concerns are in scientific areas and at least one member whose primary concerns are in nonscientific areas.

(d) Each IRB shall include at least one member who is not otherwise affiliated with the institution and who is not part of the immediate family of a person who is affiliated with the institution.

(e) No IRB may have a member participate in the IRB's initial or continuing review of any project in which the member has a conflicting interest, except to provide information requested by the IRB.

(f) An IRB may, in its discretion, invite individuals with competence in special areas to assist in the review of issues which require expertise beyond or in addition to that available on the IRB. These individuals may not vote with the IRB.

§ 26.108 IRB functions and operations.

In order to fulfill the requirements of this policy each IRB shall:

(a) Follow written procedures in the same detail as described in § 26.103(b)(4) and, to the extent required by, § 26.103(b)(5).

(b) Except when an expedited review procedure is used (see § 26.110), review proposed research at convened meetings at which a majority of the members of the IRB are present, including at least one member whose primary concerns are in nonscientific areas. In order for the research to be approved, it shall receive the approval of a majority of those members present at the meeting.

§ 26.109 IRB Review of Research.

(a) An IRB shall review and have authority to approve, require modifications in (to secure approval), or disapprove all research activities covered by this policy.

(b) An IRB shall require that information given to subjects as part of informed consent is in accordance with § 26.116. The IRB may require that information, in addition to that specifically mentioned in § 26.116, be given to the subjects when in the IRB's judgment the information would meaningfully add to the protection of the rights and welfare of subjects.

(c) An IRB shall require documentation of informed consent or may waive documentation in accordance with § 26.117.

(d) An IRB shall notify investigators and the institution in writing of its decision to approve or disapprove the proposed research activity, or of modifications required to secure IRB approval of the research activity. If the IRB decides to disapprove a research activity, it shall include in its written notification a statement of the reasons for its decision and give the investigator an opportunity to respond in person or in writing.

(e) An IRB shall conduct continuing review of research covered by this policy at intervals appropriate to the degree of risk, but not less than once per

year, and shall have authority to observe or have a third party observe the consent process and the research.

(Approved by the Office of Management and Budget under control number 9999–0020)

§26.110 Expedited review procedures for certain kinds of research involving no more than minimal risk, and for minor changes in approved research.

(a) The Secretary, HHS, has established, and published as a Notice in the FEDERAL REGISTER, a list of categories of research that may be reviewed by the IRB through an expedited review procedure. The list will be amended, as appropriate after consultation with other departments and agencies, through periodic republication by the Secretary, HHS, in the FEDERAL REGISTER. A copy of the list is available from the Office for Protection from Research Risks, National Institutes of Health, HHS, Bethesda, Maryland 20892.

(b) An IRB may use the expedited review procedure to review either or both of the following:

(1) Some or all of the research appearing on the list and found by the reviewer(s) to involve no more than minimal risk,

(2) Minor changes in previously approved research during the period (of one year or less) for which approval is authorized.

Under an expedited review procedure, the review may be carried out by the IRB chairperson or by one or more experienced reviewers designated by the chairperson from among members of the IRB. In reviewing the research, the reviewers may exercise all of the authorities of the IRB except that the reviewers may not disapprove the research. A research activity may be disapproved only after review in accordance with the non-expedited procedure set forth in §26.108(b).

(c) Each IRB which uses an expedited review procedure shall adopt a method for keeping all members advised of research proposals which have been approved under the procedure.

(d) The department or agency head may restrict, suspend, terminate, or choose not to authorize an institution's or IRB's use of the expedited review procedure.

§26.111 Criteria for IRB approval of research.

(a) In order to approve research covered by this policy the IRB shall determine that all of the following requirements are satisfied:

(1) Risks to subjects are minimized: (i) By using procedures which are consistent with sound research design and which do not unnecessarily expose subjects to risk, and (ii) whenever appropriate, by using procedures already being performed on the subjects for diagnostic or treatment purposes.

(2) Risks to subjects are reasonable in relation to anticipated benefits, if any, to subjects, and the importance of the knowledge that may reasonably be expected to result. In evaluating risks and benefits, the IRB should consider only those risks and benefits that may result from the research (as distinguished from risks and benefits of therapies subjects would receive even if not participating in the research). The IRB should not consider possible long-range effects of applying knowledge gained in the research (for example, the possible effects of the research on public policy) as among those research risks that fall within the purview of its responsibility.

(3) Selection of subjects is equitable. In making this assessment the IRB should take into account the purposes of the research and the setting in which the research will be conducted and should be particularly cognizant of the special problems of research involving vulnerable populations, such as children, prisoners, pregnant women, mentally disabled persons, or economically or educationally disadvantaged persons.

(4) Informed consent will be sought from each prospective subject or the subject's legally authorized representative, in accordance with, and to the extent required by §26.116.

(5) Informed consent will be appropriately documented, in accordance with, and to the extent required by §26.117.

(6) When appropriate, the research plan makes adequate provision for

monitoring the data collected to ensure the safety of subjects.

(7) When appropriate, there are adequate provisions to protect the privacy of subjects and to maintain the confidentiality of data.

(b) When some or all of the subjects are likely to be vulnerable to coercion or undue influence, such as children, prisoners, pregnant women, mentally disabled persons, or economically or educationally disadvantaged persons, additional safeguards have been included in the study to protect the rights and welfare of these subjects.

§ 26.112 Review by institution.

Research covered by this policy that has been approved by an IRB may be subject to further appropriate review and approval or disapproval by officials of the institution. However, those officials may not approve the research if it has not been approved by an IRB.

§ 26.113 Suspension or termination of IRB approval of research.

An IRB shall have authority to suspend or terminate approval of research that is not being conducted in accordance with the IRB's requirements or that has been associated with unexpected serious harm to subjects. Any suspension or termination of approval shall include a statement of the reasons for the IRB's action and shall be reported promptly to the investigator, appropriate institutional officials, and the department or agency head.

(Approved by the Office of Management and Budget under control number 9999–0020)

§ 26.114 Cooperative research.

Cooperative research projects are those projects covered by this policy which involve more than one institution. In the conduct of cooperative research projects, each institution is responsible for safeguarding the rights and welfare of human subjects and for complying with this policy. With the approval of the department or agency head, an institution participating in a cooperative project may enter into a joint review arrangement, rely upon the review of another qualified IRB, or make similar arrangements for avoiding duplication of effort.

§ 26.115 IRB records.

(a) An institution, or when appropriate an IRB, shall prepare and maintain adequate documentation of IRB activities, including the following:

(1) Copies of all research proposals reviewed, scientific evaluations, if any, that accompany the proposals, approved sample consent documents, progress reports submitted by investigators, and reports of injuries to subjects.

(2) Minutes of IRB meetings which shall be in sufficient detail to show attendance at the meetings; actions taken by the IRB; the vote on these actions including the number of members voting for, against, and abstaining; the basis for requiring changes in or disapproving research; and a written summary of the discussion of controverted issues and their resolution.

(3) Records of continuing review activities.

(4) Copies of all correspondence between the IRB and the investigators.

(5) A list of IRB members in the same detail as described is § 26.103(b)(3).

(6) Written procedures for the IRB in the same detail as described in § 26.103(b)(4) and § 26.103(b)(5).

(7) Statements of significant new findings provided to subjects, as required by § 26.116(b)(5).

(b) The records required by this policy shall be retained for at least 3 years, and records relating to research which is conducted shall be retained for at least 3 years after completion of the research. All records shall be accessible for inspection and copying by authorized representatives of the department or agency at reasonable times and in a reasonable manner.

(Approved by the Office of Management and Budget under control number 9999–0020)

§ 26.116 General requirements for informed consent.

Except as provided elsewhere in this policy, no investigator may involve a human being as a subject in research covered by this policy unless the investigator has obtained the legally effective informed consent of the subject or the subject's legally authorized representative. An investigator shall seek such consent only under circumstances

that provide the prospective subject or the representative sufficient opportunity to consider whether or not to participate and that minimize the possibility of coercion or undue influence. The information that is given to the subject or the representative shall be in language understandable to the subject or the representative. No informed consent, whether oral or written, may include any exculpatory language through which the subject or the representative is made to waive or appear to waive any of the subject's legal rights, or releases or appears to release the investigator, the sponsor, the institution or its agents from liability for negligence.

(a) Basic elements of informed consent. Except as provided in paragraph (c) or (d) of this section, in seeking informed consent the following information shall be provided to each subject:

(1) A statement that the study involves research, an explanation of the purposes of the research and the expected duration of the subject's participation, a description of the procedures to be followed, and identification of any procedures which are experimental;

(2) A description of any reasonably foreseeable risks or discomforts to the subject;

(3) A description of any benefits to the subject or to others which may reasonably be expected from the research;

(4) A disclosure of appropriate alternative procedures or courses of treatment, if any, that might be advantageous to the subject;

(5) A statement describing the extent, if any, to which confidentiality of records identifying the subject will be maintained;

(6) For research involving more than minimal risk, an explanation as to whether any compensation and an explanation as to whether any medical treatments are available if injury occurs and, if so, what they consist of, or where further information may be obtained;

(7) An explanation of whom to contact for answers to pertinent questions about the research and research subjects' rights, and whom to contact in the event of a research-related injury to the subject; and

(8) A statement that participation is voluntary, refusal to participate will involve no penalty or loss of benefits to which the subject is otherwise entitled, and the subject may discontinue participation at any time without penalty or loss of benefits to which the subject is otherwise entitled.

(b) Additional elements of informed consent. When appropriate, one or more of the following elements of information shall also be provided to each subject:

(1) A statement that the particular treatment or procedure may involve risks to the subject (or to the embryo or fetus, if the subject is or may become pregnant) which are currently unforeseeable;

(2) Anticipated circumstances under which the subject's participation may be terminated by the investigator without regard to the subject's consent;

(3) Any additional costs to the subject that may result from participation in the research;

(4) The consequences of a subject's decision to withdraw from the research and procedures for orderly termination of participation by the subject;

(5) A statement that significant new findings developed during the course of the research which may relate to the subject's willingness to continue participation will be provided to the subject; and

(6) The approximate number of subjects involved in the study.

(c) An IRB may approve a consent procedure which does not include, or which alters, some or all of the elements of informed consent set forth above, or waive the requirement to obtain informed consent provided the IRB finds and documents that:

(1) The research or demonstration project is to be conducted by or subject to the approval of state or local government officials and is designed to study, evaluate, or otherwise examine: (i) Public benefit of service programs; (ii) procedures for obtaining benefits or services under those programs; (iii) possible changes in or alternatives to those programs or procedures; or (iv) possible changes in methods or levels of payment for benefits or services under those programs; and

(2) The research could not practicably be carried out without the waiver or alteration.

(d) An IRB may approve a consent procedure which does not include, or which alters, some or all of the elements of informed consent set forth in this section, or waive the requirements to obtain informed consent provided the IRB finds and documents that:

(1) The research involves no more than minimal risk to the subjects;

(2) The waiver or alteration will not adversely affect the rights and welfare of the subjects;

(3) The research could not practicably be carried out without the waiver or alteration; and

(4) Whenever appropriate, the subjects will be provided with additional pertinent information after participation.

(e) The informed consent requirements in this policy are not intended to preempt any applicable federal, state, or local laws which require additional information to be disclosed in order for informed consent to be legally effective.

(f) Nothing in this policy is intended to limit the authority of a physician to provide emergency medical care, to the extent the physician is permitted to do so under applicable federal, state, or local law.

(Approved by the Office of Management and Budget under control number 9999–0020)

§ 26.117 Documentation of informed consent.

(a) Except as provided in paragraph (c) of this section, informed consent shall be documented by the use of a written consent form approved by the IRB and signed by the subject or the subject's legally authorized representative. A copy shall be given to the person signing the form.

(b) Except as provided in paragraph (c) of this section, the consent form may be either of the following:

(1) A written consent document that embodies the elements of informed consent required by § 26.116. This form may be read to the subject or the subject's legally authorized representative, but in any event, the investigator shall give either the subject or the representative adequate opportunity to read it before it is signed; or

(2) A short form written consent document stating that the elements of informed consent required by § 26.116 have been presented orally to the subject or the subject's legally authorized representative. When this method is used, there shall be a witness to the oral presentation. Also, the IRB shall approve a written summary of what is to be said to the subject or the representative. Only the short form itself is to be signed by the subject or the representative. However, the witness shall sign both the short form and a copy of the summary, and the person actually obtaining consent shall sign a copy of the summary. A copy of the summary shall be given to the subject or the representative, in addition to a copy of the short form.

(c) An IRB may waive the requirement for the investigator to obtain a signed consent form for some or all subjects if it finds either:

(1) That the only record linking the subject and the research would be the consent document and the principal risk would be potential harm resulting from a breach of confidentiality. Each subject will be asked whether the subject wants documentation linking the subject with the research, and the subject's wishes will govern; or

(2) That the research presents no more than minimal risk of harm to subjects and involves no procedures for which written consent is normally required outside of the research context. In cases in which the documentation requirement is waived, the IRB may require the investigator to provide subjects with a written statement regarding the research.

(Approved by the Office of Management and Budget under control number 9999–0020)

§ 26.118 Applications and proposals lacking definite plans for involvement of human subjects.

Certain types of applications for grants, cooperative agreements, or contracts are submitted to departments or agencies with the knowledge that subjects may be involved within the period of support, but definite plans would not

normally be set forth in the application or proposal. These include activities such as institutional type grants when selection of specific projects is the institution's responsibility; research training grants in which the activities involving subjects remain to be selected; and projects in which human subjects' involvement will depend upon completion of instruments, prior animal studies, or purification of compounds. These applications need not be reviewed by an IRB before an award may be made. However, except for research exempted or waived under §26.101 (b) or (i), no human subjects may be involved in any project supported by these awards until the project has been reviewed and approved by the IRB, as provided in this policy, and certification submitted, by the institution, to the department or agency.

§26.119 Research undertaken without the intention of involving human subjects.

In the event research is undertaken without the intention of involving human subjects, but it is later proposed to involve human subjects in the research, the research shall first be reviewed and approved by an IRB, as provided in this policy, a certification submitted, by the institution, to the department or agency, and final approval given to the proposed change by the department or agency.

§26.120 Evaluation and disposition of applications and proposals for research to be conducted or supported by a Federal Department or Agency.

The department or agency head will evaluate all applications and proposals involving human subjects submitted to the department or agency through such officers and employees of the department or agency and such experts and consultants as the department or agency head determines to be appropriate. This evaluation will take into consideration the risks to the subjects, the adequacy of protection against these risks, the potential benefits of the research to the subjects and others, and the importance of the knowledge gained or to be gained.

(b) On the basis of this evaluation, the department or agency head may approve or disapprove the application or proposal, or enter into negotiations to develop an approvable one.

§26.121 [Reserved]

§26.122 Use of Federal funds.

Federal funds administered by a department or agency may not be expended for research involving human subjects unless the requirements of this policy have been satisfied.

§26.123 Early termination of research support: Evaluation of applications and proposals.

(a) The department or agency head may require that department or agency support for any project be terminated or suspended in the manner prescribed in applicable program requirements, when the department or agency head finds an institution has materially failed to comply with the terms of this policy.

(b) In making decisions about supporting or approving applications or proposals covered by this policy the department or agency head may take into account, in addition to all other eligibility requirements and program criteria, factors such as whether the applicant has been subject to a termination or suspension under paragarph (a) of this section and whether the applicant or the person or persons who would direct or has have directed the scientific and technical aspects of an activity has have, in the judgment of the department or agency head, materially failed to discharge responsibility for the protection of the rights and welfare of human subjects (whether or not the research was subject to federal regulation).

§26.124 Conditions.

With respect to any research project or any class of research projects the department or agency head may impose additional conditions prior to or at the time of approval when in the judgment of the department or agency head additional conditions are necessary for the protection of human subjects.

PART 27—PROGRAM FRAUD CIVIL REMEDIES

Sec.
27.1 Basis and purpose.
27.2 Definitions.
27.3 Basis for civil penalties and assessments.
27.4 Investigation.
27.5 Review by the reviewing official.
27.6 Prerequisites for issuing a complaint.
27.7 Complaint.
27.8 Service of complaint.
27.9 Answer.
27.10 Default upon failure to file an answer.
27.11 Referral of complaint and answer to the presiding officer.
27.12 Notice of hearing.
27.13 Parties to the hearing.
27.14 Separation of functions.
27.15 Ex parte contacts.
27.16 Disqualification of the reviewing official or presiding officer.
27.17 Rights of parties.
27.18 Authority of the presiding officer.
27.19 Prehearing conferences.
27.20 Disclosure of documents.
27.21 Discovery.
27.22 Exchange of witness lists, statements, and exhibits.
27.23 Subpoenas for attendance at hearing.
27.24 Protective order.
27.25 Fees.
27.26 Form, filing and service of papers.
27.27 Computation of time.
27.28 Motions.
27.29 Sanctions.
27.30 The hearing and burden of proof.
27.31 Determining the amount of penalties and assessments.
27.32 Location of hearing.
27.33 Witnesses.
27.34 Evidence.
27.35 The record.
27.36 Post-hearing briefs.
27.37 Initial decision.
27.38 Reconsideration of initial decision.
27.39 Appeal to authority head.
27.40 Stays ordered by the Department of Justice.
27.41 Stay pending appeal.
27.42 Judicial review.
27.43 Collection of civil penalties and assessments.
27.44 Right to administrative offset.
27.45 Deposit in Treasury of United States.
27.46 Compromise or settlement.
27.47 Limitations.
27.48 Delegated functions.

AUTHORITY: 31 U.S.C. 3809.

SOURCE: 53 FR 15182, Apr. 27, 1988, unless otherwise noted.

§ 27.1 Basis and purpose.

(a) *Basis.* This part implements the Program Fraud Civil Remedies Act of 1986, Public Law No. 99–509, sections 6101–6104, 100 Stat. 1874 (October 21, 1986), to be codified at 31 U.S.C. 3801–3812. 31 U.S.C. 3809 of the statute requires each authority head to promulgate regulations necessary to implement the provisions of the statute.

(b) *Purpose.* This part (1) establishes administrative procedures for imposing civil penalties and assessments against persons who make, submit, or present, or cause to be made, submitted, or presented, false, fictitious, or fraudulent claims or written statements to the Environmental Protection Agency, and (2) specifies the hearing and appeal rights of persons subject to allegations of liability for such penalties and assessments.

§ 27.2 Definitions

Administrative Law Judge means an administrative law judge in the Authority appointed pursuant to 5 U.S.C. 3105 or detailed to the Authority pursuant to 5 U.S.C. 3344.

Administrator means the Administrator of the United States Environmental Protection Agency.

Authority means the United States Environmental Protection Agency.

Benefit means, in the context of ''statement,'' anything of value, including but not limited to any advantage, preference, privilege, license, permit, favorable decision, ruling, status, or loan guarantee.

Claim means any request, demand, or submission—

(a) Made to the Authority for property, services, or money (including money representing grants, loans, insurance, or benefits);

(b) Made to a recipient of property, services, or money from the Authority or to a party to a contract with the Authority—

(1) For property or services if the United States—

(i) Provided such property or services;

(ii) Provided any portion of the funds for the purchase of such property or services; or

(iii) Will reimburse such recipient or party for the purchase of such property or services; or

(2) For the payment of money (including money representing grants, loans, insurance, or benefits) if the United States—

(i) Provided any portion of the money requested or demanded; or

(ii) Will reimburse such recipient or party for any portion of the money paid on such request or demand; or

(c) Made to the Authority which has the effect of decreasing an obligation to pay or account for property, services, or money.

Complaint means the administrative complaint served by the reviewing official on the defendant under § 27.7.

Defendant means any person alleged in a complaint under § 27.7 to be liable for a civil penalty or assessment under § 27.3.

Environmental Appeals Board means the Board within the Agency described in § 1.25 of this title.

Government means the United States Government.

Hearing Clerk means the Hearing Clerk, A–110, United States Environmental Protection Agency, 401 M St. SW., Washington, DC 20460.

Individual means a natural person.

Initial decision means the written decision of the presiding officer required by § 27.10 or § 27.37, and includes a revised initial decision issued following a remand or a motion for reconsideration.

Investigating official means the Inspector General of the United States Environmental Protection Agency or an officer or employee of the Office of Inspector General designated by the Inspector General and serving in a position for which the rate of basic pay is not less than the minimum rate of basic pay for grade GS–16 under the General Schedule.

Knows or has reason to know means that a person, with respect to a claim or statement—

(a) Has actual knowledge that the claim or statement is false, fictitious, or fraudulent;

(b) Acts in deliberate ignorance of the truth or falsity of the claim or statement; or

(c) Acts in reckless disregard of the truth or falsity of the claim or statement.

Makes, wherever it appears, shall include the terms presents, submits, and causes to be made, presented, or submitted. As the context requires, *making* or *made* shall likewise include the corresponding forms of such terms.

Person means any individual, partnership, corporation, association, or private organization, and includes the plural of those terms.

Presiding officer means the administrative law judge designated by the Chief administrative law judge to serve as presiding officer.

Representative means an attorney who is a member in good standing of the bar of any State, Territory, or possession of the United States or of the District of Columbia or the Commonwealth of Puerto Rico, or other representative who must conform to the standards of conduct and ethics required of practitioners before the courts of the United States.

Reviewing official means the General Counsel of the Authority or his designee who is—

(a) Not subject to supervision by, or required to report to, the investigating official;

(b) Not employed in the organizational unit of the Authority in which the investigating official is employed; and

(c) Serving in a position for which the rate of basic pay is not less than the minimum rate of basic pay for grade GS–16 under the General Schedule.

Statement means any representation, certification, affirmation, document, record, or accounting or bookkeeping entry made—

(a) With respect to a claim or to obtain the approval or payment of a claim (including relating to eligibility to make a claim); or

(b) With respect to (including relating to eligibility for)—

(1) A contract with, or a bid or proposal for a contract with; or

(2) A grant, loan, or benefit from,

the Authority, or any State, political subdivision of a State, or other party,

if the United States Government provides any portion of the money or property under such contract or for such grant, loan, or benefit, or if the Government will reimburse such State, political subdivision, or party for any portion of the money or property under such contract or for such grant, loan, or benefit.

[45 FR 24363, Apr. 9, 1980, as amended at 57 FR 5326, Feb. 13, 1992]

§ 27.3 Basis for civil penalties and assessments.

(a) *Claims.* (1) Except as provided in paragraph (c) of this section, any person who makes a claim that the person knows or has reason to know—

(i) Is false, fictitious, or fraudulent;

(ii) Includes or is supported by any written statement which asserts a material fact which is false, fictitious, or fraudulent;

(iii) Includes or is supported by any written statement that—

(A) Omits a material fact;

(B) Is false, fictitious, or fraudulent as a result of such omission; and

(C) Is a statement in which the person making such statement has a duty to include such material fact; or

(iv) Is for payment for the provision of property or services which the person has not provided as claimed,

shall be subject, in addition to any other remedy that may be prescribed by law, to a civil penalty of not more than $5,000 for each such claim.

(2) Each voucher, invoice, claim form, or other individual request or demand for property, services, or money constitutes a separate claim.

(3) A claim shall be considered made to the Authority, recipient, or party when such claim is actually made to an an agent, fiscal intermediary, or other entity, including any State or political subdivision thereof, acting for or on behalf of the Authority, recipient, or party.

(4) Each claim for property, services, or money is subject to a civil penalty regardless of whether such property, services, or money is actually delivered or paid.

(5) If the Government has made any payment (including transferred property or provided services) on a claim, a person subject to a civil penalty under paragraph (a)(1) of this section, shall also be subject to an assessment of not more than twice the amount of such claim or that portion thereof that is determined to be in violation of paragraph (a)(1) of this section. Such assessment shall be in lieu of damages sustained by the Government because of such claim.

(b) *Statements.* (1) Except as provided in paragraph (c) of this section, any person who makes a written statement that—

(i) The person knows or has reason to know—

(A) Asserts a material fact which is false, fictitious, or fraudulent; or

(B) Is false, fictitious, or fraudulent because it omits a material fact that the person making the statement has a duty to include in such statement; and

(ii) Contains or is accompanied by an express certification or affirmation of the truthfulness and accuracy of the contents of the statement,

shall be subject, in addition to any other remedy that may be prescribed by law, to a civil penalty of not more than $5,000 for each such statement.

(2) Each written representation, certification, or affirmation constitutes a separate statement.

(3) A statement shall be considered made to the Authority when such statement is actually made to an agent, fiscal intermediary, or other entity, including any State or political subdivision thereof, acting for or on behalf of such Authority.

(c) No proof of specific intent to defraud is required to establish liability under this section.

(d) In any case in which it is determined that more than one person is liable for making a claim or statement under this section, each such person may be held liable for a civil penalty under this section.

(e) In any case in which it is determined that more than one person is liable for making a claim under this section on which the Government has made payment (including transferred property or provided services), an assessment may be imposed against any such person or jointly and severally against any combination of such persons.

§27.4 Investigation.

(a) If the investigating official concludes that a subpoena pursuant to the authority conferred by 31 U.S.C. 3804(a) is warranted—

(1) The subpoena so issued shall notify the person to whom it is addressed of the authority under which the subpoena is issued and shall identify the records or documents sought;

(2) The investigating official may designate a person to act on his or her behalf to receive the documents sought; and

(3) The person receiving such subpoena shall be required to tender to the investigating official or the person designated to receive the documents a certification that the documents sought have been produced, or that such documents are not available and the reasons therefor, or that such documents, suitably identified, have been withheld based upon the assertion of an identified privilege.

(b) If the investigating official concludes that an action under the Program Fraud Civil Remedies Act may be warranted, the investigating official shall submit a report containing the findings and conclusions of such investigation to the reviewing official.

(c) Nothing in this section shall preclude or limit an investigating official's discretion to defer or postpone a report or referral to the reviewing official to avoid interference with a criminal investigation or prosecution.

(d) Nothing in this section modifies any responsibility of an investigating official to report violations of criminal law to the Attorney General.

§27.5 Review by the reviewing official.

(a) If, based on the report of the investigating official under §27.4(b), the reviewing official determines that there is adequate evidence to believe that a person is liable under §27.3 of this part, the reviewing official shall transmit to the Attorney General a written notice of the reviewing official's intention to issue a complaint under §27.7.

(b) Such notice shall include—

(1) A statement of the reviewing official's reasons for issuing a complaint;

(2) A statement specifying the evidence that supports the allegations of liability;

(3) A description of the claims or statements upon which the allegations of liability are based;

(4) An estimate of the amount of money or the value of property, services, or other benefits requested or demanded in violation of §27.3 of this part;

(5) A statement of any exculpatory or mitigating circumstances that may relate to the claims or statements known by the reviewing official or the investigating official; and

(6) A statement that there is a reasonable prospect of collecting an appropriate amount of penalties and assessments.

§27.6 Prerequisites for issuing a complaint.

(a) The reviewing official may issue a complaint under §27.7 only if—

(1) The Department of Justice approves the issuance of a complaint in written statement described in 31 U.S.C. 3803(b)(1), and

(2) In the case of allegations of liability under §27.3(a) with respect to a claim, the reviewing official determines that, with respect to such claim or a group of related claims submitted at the same time such claim is submitted (as defined in paragraph (b) of this section), the amount of money or the value of property or services demanded or requested in violation of §27.3(a) does not exceed $150,000.

(b) For the purposes of this section, a related group of claims submitted at the same time shall include only those claims arising from the same transaction (*e.g.*, grant, loan, application, or contract) that are submitted simultaneously as part of a single request, demand, or submission.

(c) Nothing in this section shall be construed to limit the reviewing official's authority to join in a single complaint against a person, claims that are unrelated or were not submitted simultaneously, regardless of the amount of money, or the value of property or services, demanded or requested.

§ 27.7 Complaint.

(a) On or after the date the Department of Justice approves the issuance of a complaint in accordance with 31 U.S.C. 3803(b)(1), the reviewing official may serve a complaint on the defendant, as provided in § 27.8.

(b) The complaint shall state—

(1) The allegations of liability against the defendant, including the statuory basis for liability, an identification of the claims or statements that are the basis for the alleged liability, and the reasons why liability allegedly arises from such claims or statements;

(2) The maximum amount of penalties and assessments for which the defendant may be held liable;

(3) Instructions for filing an answer to request a hearing, including a specific statement of the defendant's right to request a hearing by filing an answer and to be represented by a representative; and

(4) That failure to file an answer within 30 days of service of the complaint will result in the imposition of the maximum amount of penalties and assessments without right to appeal as provided in § 27.10.

(c) At the same time the reviewing official serves the complaint, he or she shall serve the defendant with a copy of these regulations.

§ 27.8 Service of complaint.

(a) Service of a complaint must be made by certified or registered mail or by delivery in any manner authorized by Rule 4(d) of the Federal Rules of Civil Procedure. Service is complete upon receipt.

(b) Proof of service, stating the name and address of the person on whom the complaint was served, and the manner and date of service, may be made by—

(1) Affidavit of the individual serving the complaint by delivery;

(2) A United States Postal Service return receipt card acknowledging receipt; or

(3) Written acknowledgment of receipt by the defendant or his or her representative.

§ 27.9 Answer.

(a) The defendant may request a hearing by filing an answer with the reviewing official within 30 days of service of the complaint. An answer shall be deemed to be a request for hearing.

(b) In the answer, the defendant—

(1) Shall admit or deny each of the allegations of liability made in the complaint;

(2) Shall state any defense on which the defendant intends to rely;

(3) May state any reasons why the defendant contends that the penalties and assessments should be less than the statutory maximum; and

(4) Shall state the name, address, and telephone number of the person authorized by the defendant to act as defendant's representative, if any.

(c) If the defendant is unable to file an answer meeting the requirements of paragraph (b) of this section within the time provided, the defendant may, before the expiration of 30 days from service of the complaint, file with the reviewing official a general answer denying liability and requesting a hearing, and a request for an extension of time within which to file an answer meeting requirements of paragraph (b) of this section. The reviewing official shall file promptly with the hearing clerk the complaint, the general answer denying liability, and the request for an extension of time as provided in § 27.11. Upon assignment to a presiding officer, the presiding officer may, for good cause shown, grant the defendant up to 30 additional days within which to file an answer meeting the requirements of paragraph (b) of this section.

§ 27.10 Default upon failure to file an answer.

(a) If the defendant does not file an answer within the time prescribed in § 27.9(a), the reviewing official may file the complaint with the hearing clerk as provided in § 27.11.

(b) Upon assignment of the complaint to a presiding officer, the presiding officer shall promptly serve on defendant in the manner prescribed in § 27.8, a notice that an initial decision will be issued under this section.

(c) The presiding officer shall assume the facts alleged in the complaint to be true, and, if such facts establish liability under § 27.3, the presiding officer shall issue an initial decision imposing

the maximum amount of penalties and assessments allowed under the statute.

(d) Except as otherwise provided in this section, by failing to file a timely answer, the defendant waives any right to further review of the penalties and assessments imposed under paragraph (c) of this section, and the initial decision shall become final and binding upon the parties 30 days after it is issued.

(e) If, before such an initial decision becomes final, the defendant files a motion seeking to reopen on the grounds that extraordinary circumstances prevented the defendant from filing an answer, the initial decision shall be stayed pending the presiding officer's decision on the motion.

(f) If, on such motion, the defendant can demonstrate extraordinary circumstances excusing the failure to file a timely answer, the presiding officer shall withdraw the initial decision in paragraph (c) of this section, if such a decision has been issued, and shall grant the defendant an opportunity to answer the complaint.

(g) A decision of the presiding officer denying a defendant's motion under paragraph (e) of this section, is not subject to reconsideration under §27.38.

(h) The defendant may appeal to the Environmental Appeals Board the decision denying a motion to reopen by filing a notice of appeal within 15 days after the presiding officer denies the section. The timely filing of a notice of appeal shall stay the initial decision the Environmental Appeals Board decides the issue.

(i) If the defendant files a timely notice of appeal, the presiding officer shall forward the record of the proceeding to the Environmental Appeals Board.

(j) The Environmental Appeals Board shall decide expeditiously whether extraordinary circumstances excuse the defendant's failure to file a timely answer based solely on the record before the presiding officer.

(k) If the Environmental Appeals Board decides that extraordinary circumstances excused the defendant's failure to file a timely answer, the Environmental Appeals Board shall remand the case to the presiding officer with instructions to grant the defendant an opportunity to answer.

(l) If the Environmental Appeals Board decides that the defendant's failure to file a timely answer is not excused, the Environmental Appeals Board shall reinstate the initial decision of the presiding officer, which shall become final and binding upon the parties 30 days after the Environmental Appeals Board issues such decision.

[45 FR 24363, Apr. 9, 1980, as amended at 57 FR 5326, Feb. 13, 1992]

§27.11 Referral of complaint and answer to the presiding officer.

(a) Upon receipt of an answer, the reviewing official shall file the complaint and answer with the hearing clerk.

(b) The hearing clerk shall forward the complaint and answer to the Chief administrative law judge who shall assign himself or herself or another administrative law judge as presiding officer. The presiding officer shall then obtain the complaint and answer from the Chief administrative law judge and notify the parties of his or her assignment.

§27.12 Notice of hearing.

(a) When the presiding officer obtains the complaint and answer, the presiding officer shall promptly serve a notice of hearing upon the defendant in the manner prescribed by §27.8. At the same time, the presiding officer shall send a copy of such notice to the representative for the Government.

(b) Such notice shall include—

(1) The date, time and place, and the nature of the hearing;

(2) The legal authority and jurisdiction under which the hearing is to be held;

(3) The matters of fact and law to be asserted;

(4) A description of the procedures for the conduct of the hearing;

(5) The name, address, and telephone number of the representative of the Government and of the defendant, if any; and

(6) Such other matters as the presiding officer deems appropriate.

(c) The presiding officer shall issue the notice of hearing at least twenty

(20) days prior to the date set for the hearing.

§ 27.13 Parties to the hearing.

(a) The parties to the hearing shall be the defendant and the Authority.

(b) Pursuant to 31 U.S.C. 3730(c)(5), a private plaintiff under the False Claims Act may participate in these proceedings to the extent authorized by the provisions of that Act.

§ 27.14 Separation of functions.

(a) The investigating official, the reviewing official, and any employee or agent of the Authority who takes part in investigating, preparing, or presenting a particular case, may not, in such case or a factually related case—

(1) Participate in the hearing as the presiding officer;

(2) Participate or advise in the initial decision or the review of the initial decision by the Environmental Appeals Board, except as a witness or representative in public proceedings; or

(3) Make the collection of penalties and assessments under 31 U.S.C. 3806.

(b) Neither the presiding officer nor the members of the Environmental Appeals Board shall be responsible to, or subject to, the supervision or direction of the investigating official or the reviewing official.

(c) Except as provided in paragraph (a) of this section, the representative for the Government may be employed anywhere in the authority, including in the offices of either the investigating official or the reviewing official.

[45 FR 24363, Apr. 9, 1980, as amended at 57 FR 5326, Feb. 13, 1992]

§ 27.15 Ex parte contacts.

No party or person (except employees of the presiding officer's office) shall communicate in any way with the presiding officer on any matter at issue in a case, unless on notice and opportunity for all parties to participate. This provision does not prohibit a person or party from inquiring about the status of a case or asking routine question concerning administrative functions or procedures.

§ 27.16 Disqualification of the reviewing official or presiding officer.

(a) A reviewing official or presiding officer in a particular case may disqualify himself or herself at any time.

(b) A party may file a motion for disqualification of a reviewing official or presiding officer with the hearing clerk. Such motion shall be accompanied by an affidavit alleging personal bias or other reason for disqualification.

(c) Such motion and affidavit shall be filed within 15 days of the party's discovery of reasons requiring disqualification, or such objections shall be deemed waived.

(d) Such affidavit shall state specific facts that support the party's belief that personal bias or other reason for disqualification exists and the time and circumstances of the party's discovery of such facts. It shall be accompanied by a certificate of the representative of record that it is made in good faith.

(e) Upon the filing of such a motion and affidavit, the presiding officer shall proceed no further in the case until he or she resolves the matter of disqualification in accordance with paragraph (f) of this section.

(f)(1) If the presiding officer determines that the reviewing official is disqualified because the reviewing official could not have made an impartial determination pursuant to § 27.5(a), the presiding officer shall dismiss the complaint without prejudice.

(2) If the presiding officer disqualifies himself or herself, the case shall be reassigned promptly to another presiding officer.

(3) If the presiding officer denies a motion to disqualify, the Environmental Appeals Board may determine the matter only as part of its review of the initial decision upon appeal, if any.

[45 FR 24363, Apr. 9, 1980, as amended at 57 FR 5326, Feb. 13, 1992]

§ 27.17 Rights of parties.

Except as otherwise limited by this part, all parties may—

(a) Be accompanied, represented, and advised by a representative;

(b) Participate in any conference held by the presiding officer;

(c) Conduct discovery;

(d) Agree to stipulations of fact or law, which shall be made part of the record;

(e) Present evidence relevant to the issues at the hearing;

(f) Present and cross-examine witnesses;

(g) Present oral arguments at the hearing as permitted by the presiding officer; and

(h) Submit written briefs and proposed findings of fact and conclusions of law after the hearing.

§27.18 Authority of the presiding officer.

(a) The presiding officer shall conduct a fair and impartial hearing, avoid delay, maintain order, and assure that a record of the proceeding is made.

(b) The presiding officer has the authority to—

(1) Set and change the date, time, and place of the hearing upon reasonable notice to the parties;

(2) Continue or recess the hearing in whole or in part for a reasonable period of time;

(3) Hold conferences to identify or simplify the issues, or to consider other matters that may aid in the expeditious disposition of the proceeding;

(4) Administer oaths and affirmations;

(5) Issue subpoenas requiring the attendance of witnesses and the production of documents at depositions or at hearings;

(6) Rule on motions and other procedural matters;

(7) Regulate the scope and timing of discovery;

(8) Regulate the course of the hearing and the conduct of representatives and parties;

(9) Examine witnesses;

(10) Receive, rule on, exclude, or limit evidence;

(11) Upon motion of a party, take official notice of facts;

(12) Upon motion of a party, decide cases, in whole or in part, by summary judgment where there is no disputed issue of material fact;

(13) Conduct any conference, argument, or hearing on motions in person or by telephone; and

(14) Exercise such other authority as is necessary to carry out the responsibilities of the presiding officer under this part.

(c) The presiding officer does not have the authority to find Federal statutes or regulations invalid.

§27.19 Prehearing conferences.

(a) The presiding officer may schedule prehearing conferences as appropriate.

(b) Upon the motion of any party, the presiding officer shall schedule at least one prehearing conference at a reasonable time in advance of the hearing.

(c) The presiding officer may use prehearing conferences to discuss the following:

(1) Simplification of the issues;

(2) The necessity or desirability of amendments to the pleadings, including the need for a more definite statement;

(3) Stipulations and admissions of fact as to the contents and authenticity of documents;

(4) Whether the parties can agree to submission of the case on a stipulated record;

(5) Whether a party chooses to waive appearance at an oral hearing and to submit only documentary evidence (subject to the objection of other parties) and written argument;

(6) Limitation of the number of witnesses;

(7) Scheduling dates for the exchange of witness lists and of proposed exhibits;

(8) Discovery;

(9) The time and place for the hearing; and

(10) Such other matters as may tend to expedite the fair and just disposition of the proceedings.

(d) The presiding officer may issue an order containing all matters agreed upon by the parties or ordered by the presiding officer at a prehearing conference.

§27.20 Disclosure of documents.

(a) Upon written request to the reviewing official, the defendant may review any relevant and material documents, transcripts, records, and other materials that relate to the allegations set out in the complaint and upon which the findings and conclusions of the investigating official under §27.4(b)

are based, unless such documents are subject to a privilege under Federal law. Upon payment of fees for duplication, the defendant may obtain copies of such documents.

(b) Upon written request to the reviewing official, the defendant also may obtain a copy of all exculpatory information in the possession of the reviewing official or investigating official relating to the allegations in the complaint, even if it is contained in a document that would otherwise be privileged. If the document would otherwise be privileged, only that portion containing exculpatory information must be disclosed.

(c) The notice sent to the Attorney General from the reviewing official as described in § 27.5 is not discoverable under any circumstances.

(d) The defendant may file a motion to compel disclosure of the documents subject to the provisions of this section. Such a motion may only be filed following the filing of an answer pursuant to § 27.9.

§ 27.21 Discovery.

(a) The following types of discovery are authorized:

(1) Requests for production of documents for inspection and copying;

(2) Requests for admissions of the authenticity of any relevant document or of the truth of any relevant fact;

(3) Written interrogatories; and

(4) Depositions.

(b) For the purpose of this section and §§ 27.22 and 27.23, the term ''documents'' includes information, documents, reports, answers, records, accounts, papers, and other data and documentary evidence. Nothing contained herein shall be interpreted to require the creation of a document.

(c) Unless mutually agreed to by the parties, discovery is available only as ordered by the presiding officer. The presiding officer shall regulate the timing of discovery.

(d) *Motions for discovery*. (1) A party seeking discovery may file a motion which shall be accompanied by a copy of the requested discovery, or in the case of depositions, a summary of the scope of the proposed deposition.

(2) Within ten days of service, a party may file an opposition to the motion and/or a motion for protective order as provided in § 27.24.

(3) The presiding officer may grant a motion for discovery only if he finds that the discovery sought—

(i) Is necessary for the expeditious, fair, and reasonable consideration of the issues;

(ii) Is not unduly costly or burdensome;

(iii) Will not unduly delay the proceeding; and

(iv) Does not seek privileged information.

(4) The burden of showing that discovery should be allowed is on the party seeking discovery.

(5) The presiding officer may grant discovery subject to a protective order under § 27.24.

(e) *Depositions*. (1) If a motion for deposition is granted, the presiding officer shall issue a subpoena for the deponent, which may require the deponent to produce documents. The subpoena shall specify the time and place at which the deposition will be held.

(2) The party seeking to depose shall serve the subpoena in the manner prescribed in § 27.8.

(3) The deponent may file a motion to quash the subpoena or a motion for a protective order within ten days of service.

(4) The party seeking to depose shall provide for the taking of a verbatim transcript of the deposition, which it shall make available to all other parties for inspection and copying.

(f) Each party shall bear its own costs of discovery.

§ 27.22 Exchange of witness lists, statements and exhibits.

(a) At least 15 days before the hearing or at such other time as may be ordered by the presiding officer, the parties shall exchange witness lists, copies of prior statements of proposed witnesses, and copies of proposed hearing exhibits, including copies of any written statements that the party intends to offer in lieu of live testimony in accordance with § 27.33(b). At the time the above documents are exchanged, any party that intends to rely on the transcript of deposition testimony in lieu of live testimony at the hearing, if permitted by the presiding officer,

shall provide each party with a copy of the specific pages of the transcript it intends to introduce into evidence.

(b) If a party objects, the presiding officer shall not admit into evidence the testimony of any witness whose name does not appear on the witness list or any exhibit not provided to the opposing party as provided above unless the presiding officer finds good cause for the failure or that there is not prejudice to the objecting party.

(c) Unless another party objects within the time set by the presiding officer, documents exchanged in accordance with paragraph (a) of this section shall be deemed to be authentic for the purpose of admissibility at the hearing.

§27.23 Subpoenas for attendance at hearing.

(a) A party wishing to procure the appearance and testimony of any individual at the hearing may request that the presiding officer issue a subpoena.

(b) A subpoena requiring the attendance and testimony of an individual may also require the individual to produce documents at the hearing.

(c) A party seeking a subpoena shall file a written request therefor not less than 15 days before the date fixed for the hearing unless otherwise allowed by the presiding officer for good cause shown. Such request shall specify any documents to be produced and shall designate the witnesses and describe the address and location thereof with sufficient particularity to permit such witnesses to be found.

(d) The subpoena shall specify the time and place at which the witness is to appear and any documents the witness is to produce.

(e) The party seeking the subpoena shall serve it in the manner prescribed in §27.8. A subpoena on a party or upon an individual under the control of a party may be served by first class mail.

(f) A party or the individual to whom the subpoena is directed may file a motion to quash the subpoena within ten days after service or on or before the time specified in the subpoena for compliance if it is less than ten days after service.

§27.24 Protective order.

(a) A party or a prospective witness or deponent may file a motion for a protective order with respect to discovery sought by a party or with respect to the hearing, seeking to limit the availability or disclosure of evidence.

(b) In issuing a protective order, the presiding officer may make any order which justice requires to protect a party or person from annoyance, embarrassment, oppression, or undue burden or expense, including one or more of the following:

(1) That the discovery not be had;

(2) That the discovery may be had only on specified terms and conditions, including a designation of the time or place;

(3) That the discovery may be had only through a method of discovery other than that requested;

(4) That certain matters not be inquired into, or that the scope of discovery be limited to certain matters;

(5) That discovery be conducted with no one present except persons designated by the presiding officer;

(6) That the contents of discovery or evidence be sealed;

(7) That a deposition after being sealed be opened only by order of the presiding officer;

(8) That a trade secret or other confidential research, development, or commercial information, or facts pertaining to any criminal investigation, proceeding, or other administrative investigation not be disclosed or be disclosed only in a designated way; or

(9) That the parties simultaneously file specified documents or information enclosed in sealed envelopes to be opened as directed by the presiding officer.

§27.25 Fees.

The party requesting a subpoena shall pay the cost of the fees and mileage of any witness subpoenaed in the amounts that would be payable to a witness in a proceeding in United States District Court. A check for witness fees and mileage shall accompany the subpoena when served, except that when a subpoena is issued on behalf of the Authority, a check for witness fees and mileage need not accompany the subpoena.

§ 27.26 Form, filing and service of papers.

(a) *Form.* (1) Documents filed with the hearing clerk shall include an original and two copies.

(2) The first page of every pleading and paper filed in the proceeding shall contain a caption setting forth the title of the action, the case number assigned by the hearing clerk, and a designation of the paper (*e.g.,* motion to quash subpoena).

(3) Every pleading and paper shall be signed by, and shall contain the address and telephone number of, the party or the person on whose behalf the paper was filed, or his or her representative.

(4) Papers are considered filed when they are mailed. Date of mailing may be established by a certificate from the party or its representative or by proof that the document was sent by certified or registered mail.

(b) *Service.* A party filing a document with the hearing clerk shall, at the time of filing, serve a copy of such document on every other party. Service upon any party of any document, other than those required to be served as prescribed in § 27.8, shall be made by delivering a copy or by placing a copy of the document in the United States mail, postage prepaid and addressed, to the party's last known address. When a party is represented by a representative, service shall be made upon such representative in lieu of the actual party.

(c) *Proof of service.* A certificate of the individual serving the document by personal delivery or by mail, setting forth the manner of service, shall be proof of service.

§ 27.27 Computation of time.

(a) In computing any period of time under this part or in an order issued thereunder, the time begins with the day following the act, event, or default, and includes the last day of the period, unless it is a Saturday, Sunday, or legal holiday observed by the Federal government, in which event it includes the next business day.

(b) When the period of time allowed is less than seven days, intermediate Saturdays, Sundays, and legal holidays observed by the Federal government shall be excluded from the computation.

(c) When a document has been served or issued by placing it in the mail, an additional five days will be added to the time permitted for any response.

§ 27.28 Motions.

(a) Any application to the presiding officer for an order or ruling shall be by motion. Motions shall state the relief sought, the authority relied upon, and the facts alleged, and shall be filed with hearing clerk and served on all other parties.

(b) Except for motions made during a prehearing conference or at the hearing, all motions shall be in writing. The presiding officer may require that oral motions be reduced to writing.

(c) Within 15 days after a written motion is served, or such other time as may be fixed by the presiding officer, any party may file a response to such motion.

(d) The presiding officer may not grant a written motion before the time for filing responses thereto has expired, except upon consent of the parties or following a hearing on the motion, but may overrule or deny such motion without awaiting a response.

(e) The presiding officer shall make a reasonable effort to dispose of all outstanding motions prior to the beginning of the hearing.

§ 27.29 Sanctions.

(a) The presiding officer may sanction a person, including any party or representative for—

(1) Failing to comply with an order, rule, or procedure governing the proceeding;

(2) Failing to prosecute or defend an action; or

(3) Engaging in other misconduct that interferes with the speedy, orderly, or fair conduct of the hearing.

(b) Any such sanction, including but not limited to those listed in paragraphs (c), (d), and (e) of this section, shall reasonably relate to the severity and nature of the failure or misconduct.

(c) When a party fails to comply with an order, including an order for taking a deposition, the production of evidence within the party's control, or a

request for admission, the presiding officer may—

(1) Draw an inference in favor of the requesting party with regard to the information sought;

(2) In the case of requests for admission, deem each matter of which an admission is requested to be admitted;

(3) Prohibit the party failing to comply with such order from introducing evidence concerning, or otherwise relying upon, testimony relating to the information sought; and

(4) Strike any part of the pleadings or other submissions of the party failing to comply with such request.

(d) If a party fails to prosecute or defend an action under this part commenced by service of a notice of hearing, the presiding officer may dismiss the action or may issue an initial decision imposing penalties and assessments.

(e) The presiding officer may refuse to consider any motion, request, response, brief or other document which is not filed in a timely fashion.

§27.30 The hearing and burden of proof.

(a) The presiding officer shall conduct a hearing on the record in order to determine whether the defendant is liable for a civil penalty or assessment under §27.3 and, if so, the appropriate amount of any such civil penalty or assessment considering any aggravating or mitigating factors.

(b) The Authority shall prove defendant's liability and any aggravating factors by a preponderance of the evidence.

(c) The defendant shall prove any affirmative defenses and any mitigating factors by a preponderance of the evidence.

(d) The hearing shall be open to the public unless otherwise ordered by the presiding officer for good cause shown.

§27.31 Determining the amount of penalties and assessments.

(a) In determining an appropriate amount of civil penalties and assessments, the presiding officer and the Environmental Appeals Board, upon appeal, should evaluate any circumstances that mitigate or aggravate the violation and should articulate in their opinions the reasons that support the penalties and assessments they impose. Because of the intangible costs of fraud, the expense of investigating such conduct, and the need to deter others who might be similarly tempted, ordinarily double damages and a significant civil penalty should be imposed.

(b) Although not exhaustive, the following factors are among those that may influence the presiding officer and the Environmental Appeals Board in determining the amount of penalties and assessments to impose with respect to the misconduct (*i.e.*, the false, fictitious, or fraudulent claims or statements) charged in the complaint:

(1) The number of false, fictitious, or fraudulent claims or statements;

(2) The time period over which such claims or statements were made;

(3) The degree of the defendant's culpability with respect to the misconduct;

(4) The amount of money or the value of the property, services, or benefit falsely claimed;

(5) The value of the Government's actual loss as a result of the misconduct, including foreseeable consequential damages and the costs of investigation;

(6) The relationship of the amount imposed as civil penalties to the amount of the Government's loss;

(7) The potential or actual impact of the misconduct upon national defense, public health or safety, or public confidence in the management of Government programs and operations, including particularly the impact on the intended beneficiaries of such programs;

(8) Whether the defendant has engaged in a pattern of the same or similar misconduct;

(9) Whether the defendant attempted to conceal the misconduct;

(10) The degree to which the defendant has involved others in the misconduct or in concealing it;

(11) Where the misconduct of employees or agents is imputed to the defendant, the extent to which the defendant's practices fostered or attempted to preclude such misconduct;

(12) Whether the defendant cooperated in or obstructed an investigation of the misconduct;

(13) Whether the defendant assisted in identifying and prosecuting other wrongdoers;

(14) The complexity of the program or transaction, and the degree of the defendant's sophistication with respect to it, including the extent of the defendant's prior participation in the program or in similar transactions;

(15) Whether the defendant has been found, in any criminal, civil, or administrative proceeding to have engaged in similar misconduct or to have dealt dishonestly with the Government of the United States or of a State, directly or indirectly; and

(16) The need to deter the defendant and others from engaging in the same or similar misconduct.

(c) Nothing in this section shall be construed to limit the presiding officer or the Environmental Appeals Board from considering any other factors that in any given case may mitigate or aggravate the offense for which penalties and assessments are imposed.

[45 FR 24363, Apr. 9, 1980, as amended at 57 FR 5327, Feb. 13, 1992]

§ 27.32 Location of hearing.

(a) The hearing may be held—

(1) In any judicial district of the United States in which the defendant resides or transacts business;

(2) In any judicial district of the United States in which the claim or statement in issue was made; or

(3) In such other place as may be agreed upon by the defendant and the presiding officer.

(b) Each party shall have the opportunity to present argument with respect to the location of the hearing.

(c) The hearing shall be held at the place and at the time ordered by the presiding officer.

§ 27.33 Witnesses.

(a) Except as provided in paragraph (b) of this section, testimony at the hearing shall be given orally by witnesses under oath or affirmation.

(b) At the discretion of the presiding officer, testimony may be admitted in the form of a written statement or deposition. Any such written statement must be provided to all other parties along with the last known address of such witness, in a manner which allows sufficient time for other parties to subpoena such witness for cross-examination at the hearing. Prior written statements of witnesses proposed to testify at the hearing and deposition transcripts shall be exchanged as provided in § 27.22(a).

(c) The presiding officer shall exercise reasonable control over the mode and order of interrogating witnesses and presenting evidence so as to:

(1) Make the interrrogation and presentation effective for the ascertainment of the truth,

(2) Avoid needless consumption of time, and

(3) Protect witnesses from harassment or undue embarrassment.

(d) The presiding officer shall permit the parties to conduct such cross-examination as may be required for a full and true disclosure of the facts.

(e) At the discretion of the presiding officer, a witness may be cross-examined on matters relevant to the proceeding without regard to the scope of his or her direct examination. To the extent permitted by the presiding officer, cross-examination on matters outside the scope of direct examination shall be conducted in the manner of direct examination and may proceed by leading questions only if the witness is a hostile witness, an adverse party, or a witness identified with an adverse party.

(f) Upon motion of any party, the presiding officer shall order witnesses excluded so that they cannot hear the testimony of other witnesses. This rule does not authorize exclusion of—

(1) A party who is an individual;

(2) In the case of a party that is not an individual, an officer or empoyee of the party appearing for the entity *pro se* or designated by the party's representative; or

(3) an individual whose presence is shown by a party to be essential to the presentation of its case, including an individual employed by the Government engaged in assisting the representative for the Government.

§ 27.34 Evidence.

(a) The presiding officer shall determine the admissibility of evidence.

(b) Except as provided in this part, the presiding officer shall not be bound

by the Federal Rules of Evidence. However, the presiding officer may apply the Federal Rules of Evidence when appropriate, *e.g.,* to exclude unreliable evidence.

(c) The presiding officer shall exclude irrelevant and immaterial evidence.

(d) Although relevant, evidence may be excluded if its probative value is substantially outweighed by the danger of unfair prejudice, confusion of the issues, or by considerations of undue delay or needless presentation of cumulative evidence.

(e) Although relevant, evidence may be excluded if it is privileged under Federal law.

(f) Evidence concerning offers of compromise or settlement shall be inadmissible to the extent provided in Rule 408 of the Federal Rules of Evidence.

(g) The presiding officer shall permit the parties to introduce rebuttal witnesses and evidence.

(h) All documents and other evidence offered or taken for the record shall be open to examination by all parties, unless otherwise ordered by the presiding officer pursuant to §27.24.

§27.35 The record.

(a) The hearing will be recorded and transcribed. Transcripts may be obtained following the hearing from the hearing clerk at a cost not to exceed the actual cost of duplication.

(b) The transcript of testimony, exhibits and other evidence admitted at the hearing, and all papers and requests filed in the proceeding constitute the record for the decision by the presiding officer and the Environmental Appeals Board.

(c) The record may be inspected and copied (upon payment of a reasonable fee) by anyone, unless otherwise ordered by the presiding officer pursuant to §27.24.

[45 FR 24363, Apr. 9, 1980, as amended at 57 FR 5327, Feb. 13, 1992]

27.36 Post-hearing briefs.

The presiding officer may require the parties to file post-hearing briefs. In any event, any party may file a post-hearing brief. The presiding officer shall fix the time for filing such briefs, not to exceed 60 days from the date the parties receive the transcript of the hearing or, if applicable, the stipulated record. Such briefs may be accompanied by proposed findings of fact and conclusions of law. The presiding officer may permit the parties to file responsive briefs.

§27.37 Initial decision.

(a) The presiding officer shall issue an initial decision based only on the record. The decision shall contain findings of fact, conclusions of law, and the amount of any penalties and assessments imposed.

(b) The findings of fact shall include a finding on each of the following issues:

(1) Whether the claims or statements identified in the complaint, or any portions thereof, violate §27.3;

(2) If the person is liable for penalties or assessments, the appropriate amount of any such penalties or assessments considering any mitigating or aggravating factors that he or she finds in the case, such as those described in §27.31.

(c) The presiding officer shall promptly serve the initial decision on all parties within 90 days after the time for submission of post-hearing briefs and responsive briefs (if permitted) has expired. The presiding officer shall at the same time serve all parties with a statement describing the right of any defendant determined to be liable for a civil penalty or assessment to file a motion for reconsideration or a notice of appeal. If the presiding officer fails to meet the deadline contained in this paragraph, he or she shall notify the parties of the reason for the delay and shall set a new deadline.

(d) Unless the initial decision of the presiding officer is timely appealed to the Environmental Appeals Board, or a motion for reconsideration of the initial decision is timely filed, the initial decision shall constitute the final decision of the Environmental Appeals Board and shall be final and binding on the parties 30 days after it is issued by the presiding officer.

[45 FR 24363, Apr. 9, 1980, as amended at 57 FR 5327, Feb. 13, 1992]

§ 27.38 Reconsideration of initial decision.

(a) Except as provided in paragraph (d) of this section, any party may file a motion for reconsideration of the initial decision within 20 days of receipt of the initial decision. If service was made by mail, receipt will be presumed to be five days from the date of mailing in the absence of contrary proof.

(b) Every such motion must set forth the matters claimed to have been erroneously decided and the nature of the alleged errors. Such motion shall be accompanied by a supporting brief.

(c) Responses to such motions shall be allowed only upon request of the presiding officer.

(d) No party may file a motion for reconsideration of an initial decision that has been revised in response to a previous motion for reconsideration.

(e) The presiding officer may dispose of a motion for reconsideration by denying it or by issuing a revised intial decision.

(f) If the presiding officer denies a motion for reconsideration, the initial decision shall constitute the final decision of the Environmental Appeals Board and shall be final and binding on the parties 30 days after the presiding officer denies the motion, unless the initial decision is timely appealed to the Environmental Appeals Board in accordance with § 27.39.

(g) If the presiding officer issued a revised initial decision, that decision shall constitute the final decision of the Environmental Appeals Board and shall be final and binding on the parties 30 days after it is issued, unless it is timely appealed to the Environmental Appeals Board in accordance with § 27.39.

[45 FR 24363, Apr. 9, 1980, as amended at 57 FR 5327, Feb. 13, 1992]

§ 27.39 Appeal to authority head.

(a) Any defendant who has filed a timely answer and who is determined in an initial decision to be liable for a civil penalty or assessment may appeal such decision to the Environmental Appeals Board by filing a notice of appeal with the hearing clerk in accordance with this section.

(b)(1) A notice of appeal may be filed at any time within 30 days after the presiding officer issues an initial decision. However, if another party files a motion for reconsideration under § 27.38, consideration of the appeal shall be stayed automatically pending resolution of the motion for reconsideration.

(2) If a motion for reconsideration is timely filed, a notice of appeal may be filed within 30 days after the presiding officer denies the motion or issues a revised initial decision, whichever applies.

(3) The Environmental Appeals Board may extend the initial 30 day period for an additional 30 days if the defendant files a request for an extension within the initial 30 day period and shows good cause.

(c) If the defendant filed a timely notice of appeal, and the time for filing motions for reconsideration under § 27.38 has expired, the presiding officer shall forward the record of the proceeding to the Environmental Appeals Board.

(d) A notice of appeal shall be accompanied by a written brief specifying exceptions to the initial decision and reasons supporting the exceptions.

(e) The representative for the Government may file a brief in opposition to exceptions within 30 days of receiving the notice of appeal and accompanying brief.

(f) There is no right to appear personally before the Environmental Appeals Board.

(g) There is no right to appeal any interlocutory ruling by the presiding officer.

(h) In reviewing the initial decision, the Environmental Appeals Board shall not consider any objection that was not raised before the presiding officer unless a demonstration is made of extraordinary circumstances causing the failure to raise the objection.

(i) If any party demonstrates to the satisfaction of the Environmental Appeals Board that additional evidence not presented at such hearing is material and that there were reasonable grounds for the failure to present such evidence at such hearing, the Environmental Appeals Board shall remand the

matter to the presiding officer for consideration of such additional evidence.

(j) The Environmental Appeals Board may affirm, reduce, reverse, compromise, remand, or settle any penalty or assessment, determined by the presiding officer in any initial decision.

(k) The Environmental Appeals Board shall promptly serve each party to the appeal with a copy of the decision of the Environmental Appeals Board and a statement describing the right of any person determined to be liable for a civil penalty or assessment to seek judicial review.

(l) Unless a petition for review is filed as provided in 31 U.S.C. 3805 after a defendant has exhausted all administrative remedies under this part and within 60 days after the date on which the Environmental Appeals Board serves the defendant with a copy of the Environmental Appeals Board's decision, a determination that a defendant is liable under §27.3 is final and is not subject to judicial review.

[45 FR 24363, Apr. 9, 1980, as amended at 57 FR 5327, Feb. 13, 1992]

§27.40 Stay ordered by the Department of Justice.

If at any time the Attorney General or an Assistant Attorney General designated by the Attorney General transmits to the Environmental Appeals Board a written finding that continuation of the administrative process described in this part with respect to a claim or statement may adversely affect any pending or potential criminal or civil action related to such claim or statement, the Environmental Appeals Board shall stay the process immediately. The Environmental Appeals Board may order the process resumed only upon receipt of the written authorization of the Attorney General.

[57 FR 5327, Feb. 13, 1992]

§27.41 Stay pending appeal.

(a) An initial decision is stayed automatically pending disposition of a motion for reconsideration or of an appeal to the Environmental Appeals Board.

(b) No administrative stay is available following a final decision of the Environmental Appeals Board.

[57 FR 5327, Feb. 13, 1992]

§27.42 Judicial Review.

Section 3805 of title 31, United States Code, authorizes judicial review by an appropriate United States District Court of a final decision of the Environmental Appeals Board imposing penalties or assessments under this part and specifies the procedures for such review.

[57 FR 5327, Feb. 13, 1992]

§27.43 Collection of civil penalties and assessments.

Sections 3806 and 3808(b) of title 31, United States Code, authorize actions for collection of civil penalties and assessments imposed under this part and specify the procedures for such actions.

§27.44 Right to administrative offset.

The amount of any penalty or assessment which has become final, or for which a judgment has been entered under §§27.42 or 27.43, or any amount agreed upon in a compromise or settlement under §27.46, may be collected by administrative offset under 31 U.S.C. 3716, except that an administrative offset may not be made under this section against a refund of an overpayment of Federal taxes, then or later owing by the United States to the defendant.

§27.45 Deposit in Treasury of United States.

All amounts collected pursuant to this part shall be deposited as miscellaneous receipts in the Treasury of the United States, except as provided in 31 U.S.C. 3806(g).

§27.46 Compromise or settlement.

(a) Parties may make offers of compromise or settlement at any time.

(b) The reviewing official has the exclusive authority to compromise or settle a case under this part at any time after the date on which the reviewing official is permitted to issue a complaint and before the date on which the presiding officer issues an initial decision.

(c) The Environmental Appeals Board has exclusive authority to compromise or settle a case under this part at any time after the date on which the presiding officer issues an initial decision,

except during the pendency of any review under § 27.42 or during the pendency of any action to collect penalties and assessments under § 27.43.

(d) The Attorney General has exclusive authority to compromise or settle a case under this part during the pendency of any review under § 27.42 or of any action to recover penalties and assessments under 31 U.S.C. 3806.

(e) The investigating official may recommend settlement terms to the reviewing official, the Environmental Appeals Board, or the Attorney General, as appropriate. The reviewing official may recommend settlement terms to the Environmental Appeals Board or the Attorney General, as appropriate.

(f) Any compromise or settlement must be in writing.

[45 FR 24363, Apr. 9, 1980, as amended at 57 FR 5327, Feb. 13, 1992]

§ 27.47 Limitations.

(a) The notice of hearing with respect to a claim or statement must be served in the manner specified in § 27.8 within 6 years after the date on which such claim or statement is made.

(b) If the defendant fails to file a timely answer, service of a notice under § 27.10(b) shall be deemed a notice of hearing for purposes of this section.

(c) The statute of limitations may be extended by agreement of the parties.

§ 27.48 Delegated functions.

The Administrator delegates authority to the Environmental Appeals Board to issue final decisions in appeals filed under this part. An appeal directed to the Administrator, rather than the Environmental Appeals Board, will not be considered. This delegation of authority to the Environmental Appeals Board does not preclude the Environmental Appeals Board from referring an appeal or motion filed under this part to the Administrator for decision when the Environmental Appeals Board, in its descretion, deems it appropriate to do so. When an appeal or motion is referred to the Administrator, all parties shall be so notified and the rules in this part referring to the Environmental Appeals Board shall be interpreted as referring to the Administrator. If a case or motion is referred to the Administrator by the Environmental Appeals Board, the Administrator may consult with any EPA employee concerning the matter, provided such consultation does not violate the ex parte contacts restrictions set forth in §§ 27.14 and 27.15 of this part.

[57 FR 5328, Feb. 13, 1992]

PART 29—INTERGOVERNMENTAL REVIEW OF ENVIRONMENTAL PROTECTION AGENCY PROGRAMS AND ACTIVITIES

Sec.

29.1 What is the purpose of these regulations?
29.2 What definitions apply to these regulations?
29.3 What programs and activities of the Environmental Protection Agency are subject to these regulations?
29.4 What are the Administrator's general responsibilities under the Order?
29.5 What is the Administrator's obligation with respect to Federal interagency coordination?
29.6 What procedures apply to the selection of programs and activities under these regulations?
29.7 How does the Administrator communicate with State and local officials concerning EPA programs and activities?
29.8 How does the Administrator provide States an opportunity to comment on proposed Federal financial assistance and direct Federal development?
29.9 How does the Administrator receive and respond to comments?
29.10 How does the Administrator make efforts to accommodate intergovernmental concerns?
29.11 What are the Administrator's obligations in interstate situations?
29.12 How may a State simplify, consolidate, or substitute federally required State plans?
29.13 May the Administrator waive any provision of these regulations?

AUTHORITY: E.O. 12372, July 14, 1982 (47 FR 30959), as amended Apr. 8, 1983 (48 FR 15887); sec. 401 of the Intergovernmental Cooperation Act of 1968 as amended (31 U.S.C. 6506); sec. 204 of the Demonstration Cities and Metropolitan Development Act of 1966, as amended (42 U.S.C. 3334).

SOURCE: 48 FR 29300, June 24, 1983, unless otherwise noted.

§ 29.1 What is the purpose of these regulations?

(a) The regulations in this part implement Executive Order 12372, ''Intergovernmental Review of Federal Programs,'' issued July 14, 1982, and amended, on April 8, 1983. These regulations also implement applicable provisions of section 401 of the Intergovernmental Cooperation Act of 1968, as amended and section 204 of the Demonstration Cities and Metropolitan Development Act of 1966, as amended.

(b) These regulations are intended to foster an intergovernmental partnership and a strengthened federalism by relying on state processes and on state, areawide, regional and local coordination for review of proposed Federal financial assistance and direct Federal development.

(c) These regulations are intended to aid the internal management of the Environmental Protection Agency (EPA) and are not intended to create any right or benefit enforceable at law by a party against EPA or its officers.

§ 29.2 What definitions apply to these regulations?

Administrator means the Administrator of the U.S. Environmental Protection Agency or an official or employee of the Agency acting for the Administrator under a delegation of authority.

Agency means the U.S. Environmental Protection Agency (EPA). *Order* means Executive Order 12372, issued July 14, 1982, and amended April 8, 1983, and titled ''Intergovernmental Review of Federal Programs.''

States means any of the 50 states, the District of Columbia, the Commonwealth of Puerto Rico, the Commonwealth of the Northern Mariana Islands, Guam, American Samoa, the U.S. Virgin Islands, or the Trust Territory of the Pacific Islands.

§ 29.3 What programs and activities of the Environmental Protection Agency are subject to these regulations?

The Administrator publishes in the FEDERAL REGISTER a list of the EPA programs and activities that are subject to these regulations and identifies which of these are subject to the requirements of section 204 of the Demonstration Cities and Metropolitan Development Act.

§ 29.4 What are the Administrator's general responsibilities under the Order?

(a) The Administrator provides opportunities for consultation by elected officials of those State and local governments that would provide the non-Federal funds for, or that would be directly affected by, proposed Federal financial assistance from, or direct Federal development by, the EPA.

(b) If a State adopts a process under the Order to review and coordinate proposed Federal financial assistance and direct Federal development, the Administrator to the extent permitted by law:

(1) Uses the State process to determine official views of State and local elected officials;

(2) Communicates with State and local elected officials as early in a program planning cycle as is reasonably feasible to explain specific plans and actions;

(3) Makes efforts to accommodate State and local elected officials' concerns with proposed Federal financial assistance and direct Federal development that are communicated through the State process;

(4) Allows the States to simplify and consolidate existing federally required State plan submissions;

(5) Where State planning and budgeting systems are sufficient and where permitted by law, encourages the substitution of State plans for federally required State plans;

(6) Seeks the coordination of views of affected State and local elected officials in one State with those of another State when proposed Federal financial assistance or direct Federal development has an impact on interstate metropolitan urban centers or other interstate areas; and

(7) Supports State and local governments by discouraging the reauthorization or creation of any planning organization which is federally-funded, which has a limited purpose, and which is not adequately representative of, or accountable to, State or local elected officials,

§ 29.5 What is the Administrator's obligation with respect to Federal interagency coordination?

The Administrator, to the extent practicable, consults with and seeks advice from all other substantially affected Federal departments and agencies in an effort to assure full coordination between such agencies and EPA regarding programs and activities covered under these regulations.

§ 29.6 What procedures apply to the selection of programs and activities under these regulations?

(a) A State may select any program or activity published in the FEDERAL REGISTER in accordance with § 29.3 of this part for intergovernmental review under these regulations. Each State, before selecting programs and activities, shall consult with local elected officials.

(b) Each State that adopts a process shall notify the Administrator of EPA programs and activities selected for that process.

(c) A State may notify the Administrator of changes in its selections at any time. For each change, the State shall submit an assurance to the Administrator that the State has consulted with local elected officials regarding the change. EPA may establish deadlines by which States are required to inform the Administrator of changes in their program selections.

(d) The Administrator uses a State's process as soon as feasible, depending on individual programs and activities, after the Administrator is notified of its selections.

§ 29.7 How does the Administrator communicate with State and local officials concerning the EPA programs and activities?

(a) For those programs and activities covered by a State process under § 29.6, the Administrator, to the extent permitted by law:

(1) Uses the State process to determine views of State and local elected officials; and

(2) Communicates with State and local elected officials, through the State process, as early in a program planning cycle as is reasonably feasible to explain specific plans and actions.

(b) The Administrator provides notice of proposed Federal financial assistance or direct Federal development to directly affected State, areawide, regional, and local entities in a State if:

(1) The State has not adopted a process under the Order; or

(2) The assistance or development involves a program or activity not selected for the State process.

This notice may be published in the FEDERAL REGISTER or issued by other means which EPA, in its discretion deems appropriate.

§ 29.8 How does the Administrator provide States an opportunity to comment on proposed Federal financial assistance and direct Federal development?

(a) Except in unusual circumstances, the Administrator gives State processes or directly affected State, areawide, regional and local officials and entities:

(1) At least 30 days from the date established by the Administrator to comment on proposed Federal financial assistance in the form of noncompeting continuation awards; and

(2) At least 60 days from the date established by the Administrator to comment on proposed direct Federal development or Federal financial assistance, other than noncompeting continuation awards.

(b) This section also applies to comments in cases in which the review, coordination, and communication with the Environmental Protection Agency have been delegated.

(c) Applicants for programs and activities subject to section 204 of the Demonstration Cities and Metropolitan Development Act shall allow areawide agencies a 60-day opportunity for review and comment.

§ 29.9 How does the Administrator receive and respond to comments?

(a) The Administrator follows the procedures in § 29.10 if:

(1) A State office or official is designated to act as a single point of contact between a State process and all Federal agencies, and

(2) That office or official transmits a State process recommendation for a program selected under § 29.6.

(b) The single point of contact is not obligated to transmit comments from State, areawide, regional or local officials and entities where there is no State process recommendation. However, if a State process recommendation is transmitted by a single point of contact, all comments from State, area-wide, regional, and local officials and entities that differ from it must also be transmitted.

(c) If a State has not established a process, or is unable to submit a State process recommendation, the State, areawide, regional and local officials and entities may submit comments directly either to the applicant or to EPA.

(d) If a program or activity is not selected for a State process, the State, areawide, regional and local officials and entities may submit comments either directly to the applicant or to EPA. In addition, if a State process recommendation for a nonselected program or activity is transmitted to EPA by the single point of contact, the Administrator follows the procedures of §29.10 of this part.

(e) The Administrator *considers* comments which do not constitute a State process recommendation submitted under these regulations and for which the Administrator is not required to apply the procedures of §29.10 of this part, when such comments are provided by a single point of contact, by the applicant, or directly to the Agency by a commenting party.

§29.10 How does the Administrator make efforts to accommodate intergovernmental concerns?

(a) If a State process provides a State process recommendation to the Agency through the State's single point of contact, the Administrator either:

(1) Accepts the recommendation;

(2) reaches a mutually agreeable solution with the State process; or

(3) Provides the single point of contact with such written explanation of the decision, as the Administrator, in his or her discretion, deems appropriate. The Administrator may also supplement the written explanation by providing the explanation to the single point of contact by telephone, other telecommunication, or other means.

(b) In any explanation under paragraph (a)(3) of this section, the Administrator informs the single point of contact that:

(1) EPA will not implement its decision for at least ten days after the single point of contact receives the explanation; or

(2) The Administrator has reviewed the decision and determined that, because of unusual circumstances, the waiting period of at least ten days is not feasible.

(c) For purposes of computing the waiting period under paragraph (b)(1) of this section, a single point of contact is presumed to have received written notification 5 days after the date of mailing of such notification.

§29.11 What are the Administrator's obligations in interstate situations?

(a) The Administrator is responsible for:

(1) Identifying proposed Federal financial assistance and direct Federal development that have an impact on interstate areas;

(2) Notifying appropriate officials and entities in States which have adopted a process and selected an EPA program or activity.

(3) Making efforts to identify and notify the affected State, areawide, regional, and local officials and entities in those States that do not adopt a process under the Order or do not select an EPA program or activity;

(4) Responding in accordance with §29.10 of this part to a recommendation received from a designated areawide agency transmitted by a single point of contact, in cases in which the review, coordination, and communication with EPA were delegated.

(b) The Administrator uses the procedures in §29.10 if a State process provides a State process recommendation to the Agency through a single point of contact.

§29.12 How may a State simplify, consolidate, or substitute federally required State plans?

(a) As used in this section:

(1) *Simplify* means that a State may develop its own format, choose its own submission date, and select the planning period for a State plan.

(2) *Consolidate* means that a State may meet statutory and regulatory requirements by combining two or more plans into one document and that the State can select the format, submission date, and planning period for the consolidated plan.

(3) *Substitute* means that a State may use a plan or other document that it has developed for its own purposes to meet Federal requirements.

(b) If not inconsistent with law, a State may decide to try to simplify, consolidate, or substitute federally required State plans without prior approval by the Administrator.

(c) The Administrator reviews each State plan that a State has simplified, consolidated, or substituted and accepts the plan only if its contents meet Federal requirements.

§ 29.13 May the Administrator waive any provision of these regulations?

In an emergency, the Administrator may waive any provision of these regulations.

SUBCHAPTER B—GRANTS AND OTHER FEDERAL ASSISTANCE

PART 30—GRANTS AND AGREEMENTS WITH INSTITUTIONS OF HIGHER EDUCATION, HOSPITALS, AND OTHER NON-PROFIT ORGANIZATIONS

Subpart A—General

Sec.
30.1 Purpose.
30.2 Definitions.
30.3 Effect on other issuances.
30.4 Deviations.
30.5 Subawards.
30.6 Availability of OMB circulars.

Subpart B—Pre-Award Requirements

30.10 Purpose.
30.11 Pre-award policies.
30.12 Forms for applying for Federal assistance.
30.13 Debarment and suspension.
30.14 Special award conditions.
30.15 Metric system of measurement.
30.16 Resource Conservation and Recovery Act (RCRA).
30.17 Certifications and representations.
30.18 Hotel and motel fire safety.

Subpart C—Post-Award Requirements

FINANCIAL AND PROGRAM MANAGEMENT

30.20 Purpose of financial and program management.
30.21 Standards for financial management systems.
30.22 Payment.
30.23 Cost sharing or matching.
30.24 Program income.
30.25 Revision of budget and program plans.
30.26 Non-Federal audits.
30.27 Allowable costs.
30.28 Period of availability of funds.

PROPERTY STANDARDS

30.30 Purpose of property standards.
30.31 Insurance coverage.
30.32 Real property.
30.33 Federally-owned and exempt property.
30.34 Equipment.
30.35 Supplies and other expendable property.
30.36 Intangible property.
30.37 Property trust relationship.

PROCUREMENT STANDARDS

30.40 Purpose of procurement standards.
30.41 Recipient responsibilities.
30.42 Codes of conduct.
30.43 Competition.
30.44 Procurement procedures.
30.45 Cost and price analysis.
30.46 Procurement records.
30.47 Contract administration.
30.48 Contract provisions.

REPORTS AND RECORDS

30.50 Purpose of reports and records.
30.51 Monitoring and reporting program performance.
30.52 Financial reporting.
30.53 Retention and access requirements for records.
30.54 Quality assurance.

TERMINATION AND ENFORCEMENT

30.60 Purpose of termination and enforcement.
30.61 Termination.
30.62 Enforcement.
30.63 Disputes.

Subpart D—After-the-Award Requirements

30.70 Purpose.
30.71 Closeout procedures.
30.72 Subsequent adjustments and continuing responsibilities.
30.73 Collection of amounts due.
APPENDIX TO PART 30—CONTRACT PROVISIONS

AUTHORITY: 7 U.S.C. 135 *et seq.*; 15 U.S.C. 2601 *et seq.*; 33 U.S.C. 1251 *et seq.*; 42 U.S.C. 241, 242b, 243, 246, 300f, 300j–1, 300j–2, 300j–3; 42 U.S.C. 1857 *et seq.*; 42 U.S.C. 7401 *et seq.*; 42 U.S.C. 6901 *et seq.*; 42 U.S.C. 9601 *et seq.*

SOURCE: 61 FR 6067, Feb. 15, 1996, unless otherwise noted.

Subpart A—General

§30.1 Purpose.

This subpart establishes uniform administrative requirements for Federal grants and agreements awarded to institutions of higher education, hospitals, and other non-profit organizations. The Environmental Protection Agency (EPA) may not impose additional or inconsistent requirements, except as provided in §§30.4, and 30.14 or unless specifically required by Federal statute or Executive Order. Non-profit organizations that implement Federal programs for the States are also subject to State requirements.

§ 30.2 Definitions.

(a) Accrued expenditures means the charges incurred by the recipient during a given period requiring the provision of funds for:

(1) Goods and other tangible property received;

(2) Services performed by employees, contractors, subrecipients, and other payees; and

(3) Other amounts becoming owed under programs for which no current services or performance is required.

(b) Accrued income means the sum of:

(1) Earnings during a given period from;

(i) Services performed by the recipient; and

(ii) Goods and other tangible property delivered to purchasers; and

(2) Amounts becoming owed to the recipient for which no current services or performance is required by the recipient.

(c) Acquisition cost of equipment means the net invoice price of the equipment, including the cost of modifications, attachments, accessories, or auxiliary apparatus necessary to make the property usable for the purpose for which it was acquired. Other charges, such as the cost of installation, transportation, taxes, duty or protective in-transit insurance, shall be included or excluded from the unit acquisition cost in accordance with the recipient's regular accounting practices.

(d) Advance means a payment made by Treasury check or other appropriate payment mechanism to a recipient upon its request either before outlays are made by the recipient or through the use of predetermined payment schedules.

(e) Award means financial assistance that provides support or stimulation to accomplish a public purpose. Awards include grants and other agreements in the form of money or property in lieu of money, by the Federal Government to an eligible recipient. The term does not include: technical assistance, which provides services instead of money; other assistance in the form of loans, loan guarantees, interest subsidies, or insurance; direct payments of any kind to individuals; and, contracts which are required to be entered into and administered under procurement laws and regulations.

(f) Cash contributions means the recipient's cash outlay, including the outlay of money contributed to the recipient by third parties.

(g) Closeout means the process by which a Federal awarding agency determines that all applicable administrative actions and all required work of the award have been completed by the recipient and Federal awarding agency.

(h) Contract means a procurement contract under an award or subaward, and a procurement subcontract under a recipient's or subrecipient's contract.

(i) Cost sharing or matching means that portion of project or program costs not borne by the Federal Government.

(j) Date of completion means the date on which all work under an award is completed or the date on the award document, or any supplement or amendment thereto, on which Federal sponsorship ends.

(k) Disallowed costs means those charges to an award that the Federal awarding agency determines to be unallowable, in accordance with the applicable Federal cost principles or other terms and conditions contained in the award.

(l) Equipment means tangible nonexpendable personal property including exempt property charged directly to the award having a useful life of more than one year and an acquisition cost of $5000 or more per unit. However, consistent with recipient policy, lower limits may be established.

(m) Excess property means property under the control of any Federal awarding agency that, as determined by the head thereof, is no longer required for its needs or the discharge of its responsibilities.

(n) Exempt property means tangible personal property acquired in whole or in part with Federal funds, where the Federal awarding agency has statutory authority to vest title in the recipient without further obligation to the Federal Government. An example of exempt property authority is contained in the Federal Grant and Cooperative Agreement Act (31 U.S.C. 6306), for property acquired under an award to conduct basic or applied research by a

non-profit institution of higher education or non-profit organization whose principal purpose is conducting scientific research.

(o) Federal awarding agency means the Federal agency that provides an award to the recipient.

(p) Federal funds authorized means the total amount of Federal funds obligated by the Federal Government for use by the recipient. This amount may include any authorized carryover of unobligated funds from prior funding periods when permitted by agency regulations or agency implementing instructions.

(q) Federal share of real property, equipment, or supplies means that percentage of the property's acquisition costs and any improvement expenditures paid with Federal funds.

(r) Funding period means the period of time when Federal funding is available for obligation by the recipient.

(s) Intangible property and debt instruments means, but is not limited to, trademarks, copyrights, patents and patent applications and such property as loans, notes and other debt instruments, lease agreements, stock and other instruments of property ownership, whether considered tangible or intangible.

(t) Obligations means the amounts of orders placed, contracts and grants awarded, services received and similar transactions during a given period that require payment by the recipient during the same or a future period.

(u) Outlays or expenditures means charges made to the project or program. They may be reported on a cash or accrual basis. For reports prepared on a cash basis, outlays are the sum of cash disbursements for direct charges for goods and services, the amount of indirect expense charged, the value of third party in-kind contributions applied and the amount of cash advances and payments made to subrecipients. For reports prepared on an accrual basis, outlays are the sum of cash disbursements for direct charges for goods and services, the amount of indirect expense incurred, the value of in-kind contributions applied, and the net increase (or decrease) in the amounts owed by the recipient for goods and other property received, for services performed by employees, contractors, subrecipients and other payees and other amounts becoming owed under programs for which no current services or performance are required.

(v) Personal property means property of any kind except real property. It may be tangible, having physical existence, or intangible, having no physical existence, such as copyrights, patents, or securities.

(w) Prior approval means written approval by an authorized official evidencing prior consent.

(x) Program income means gross income earned by the recipient that is directly generated by a supported activity or earned as a result of the award (see exclusions in §30.24 (e) and (h)). Program income includes, but is not limited to, income from fees for services performed, the use or rental of real or personal property acquired under federally-funded projects, the sale of commodities or items fabricated under an award, license fees and royalties on patents and copyrights, and interest on loans made with award funds. Interest earned on advances of Federal funds is not program income. Except as otherwise provided in Federal awarding agency regulations or the terms and conditions of the award, program income does not include the receipt of principal on loans, rebates, credits, discounts, etc., or interest earned on any of them.

(y) Project costs means all allowable costs, as set forth in the applicable Federal cost principles, incurred by a recipient and the value of the contributions made by third parties in accomplishing the objectives of the award during the project period.

(z) Project period means the period established in the award document during which Federal sponsorship begins and ends.

(aa) Property means, unless otherwise stated, real property, equipment, intangible property and debt instruments.

(bb) Real property means land, including land improvements, structures and appurtenances thereto, but excludes movable machinery and equipment.

(cc) Recipient means an organization receiving financial assistance directly

from Federal awarding agencies to carry out a project or program. The term includes public and private institutions of higher education, public and private hospitals, and other quasi-public and private non-profit organizations such as, but not limited to, community action agencies, research institutes, educational associations, and health centers. The term may include commercial organizations, foreign or international organizations (such as agencies of the United Nations) which are recipients, subrecipients, or contractors or subcontractors of recipients or subrecipients at the discretion of the Federal awarding agency. The term does not include government-owned contractor-operated facilities or research centers providing continued support for mission-oriented, large-scale programs that are government-owned or controlled, or are designated as federally-funded research and development centers.

(dd) Research and development means all research activities, both basic and applied, and all development activities that are supported at universities, colleges, and other non-profit institutions. ''Research'' is defined as a systematic study directed toward fuller scientific knowledge or understanding of the subject studied. ''Development'' is the systematic use of knowledge and understanding gained from research directed toward the production of useful materials, devices, systems, or methods, including design and development of prototypes and processes. The term research also includes activities involving the training of individuals in research techniques where such activities utilize the same facilities as other research and development activities and where such activities are not included in the instruction function.

(ee) Small award means a grant or cooperative agreement not exceeding the small purchase threshold fixed at 41 U.S.C. 403(11) (currently $100,000).

(ff) Subaward means an award of financial assistance in the form of money, or property in lieu of money, made under an award by a recipient to an eligible subrecipient or by a subrecipient to a lower tier subrecipient. The term includes financial assistance when provided by any legal agreement, even if the agreement is called a contract, but does not include procurement of goods and services nor does it include any form of assistance which is excluded from the definition of ''award'' in paragraph (e) of this section.

(gg) Subrecipient means the legal entity to which a subaward is made and which is accountable to the recipient for the use of the funds provided. The term may include foreign or international organizations (such as agencies of the United Nations) at the discretion of the Federal awarding agency.

(hh) Supplies means all personal property excluding equipment, intangible property, and debt instruments as defined in this section, and inventions of a contractor conceived or first actually reduced to practice in the performance of work under a funding agreement (''subject inventions''), as defined in 37 CFR part 401, ''Rights to Inventions Made by Nonprofit Organizations and Small Business Firms Under Government Grants, Contracts, and Cooperative Agreements.''

(ii) Suspension means an action by a Federal awarding agency that temporarily withdraws Federal sponsorship under an award, pending corrective action by the recipient or pending a decision to terminate the award by the Federal awarding agency. Suspension of an award is a separate action from suspension under Federal agency regulations implementing Executive Orders 12549 and 12689, ''Debarment and Suspension.''

(jj) Termination means the cancellation of Federal sponsorship, in whole or in part, under an agreement at any time prior to the date of completion.

(kk) Third party in-kind contributions means the value of non-cash contributions provided by non-Federal third parties. Third party in-kind contributions may be in the form of real property, equipment, supplies and other expendable property, and the value of goods and services directly benefiting and specifically identifiable to the project or program.

(ll) Unliquidated obligations, for financial reports prepared on a cash basis, means the amount of obligations incurred by the recipient that have not

been paid. For reports prepared on an accrued expenditure basis, they represent the amount of obligations incurred by the recipient for which an outlay has not been recorded.

(mm) Unobligated balance means the portion of the funds authorized by the Federal awarding agency that has not been obligated by the recipient and is determined by deducting the cumulative obligations from the cumulative funds authorized.

(nn) Unrecovered indirect cost means the difference between the amount awarded and the amount which could have been awarded under the recipient's approved negotiated indirect cost rate.

(oo) Working capital advance means a procedure where by funds are advanced to the recipient to cover its estimated disbursement needs for a given initial period.

§30.3 Effect on other issuances.

For awards subject to Circular A–110, all administrative requirements of codified program regulations, program manuals, handbooks and other non-regulatory materials which are inconsistent with the requirements of Circular A–110 shall be superseded, except to the extent they are required by statute, or authorized in accordance with the deviations provision in §30.4.

§30.4 Deviations.

The Office of Management and Budget (OMB) may grant exceptions for classes of grants or recipients subject to the requirements of Circular A–110 when exceptions are not prohibited by statute. However, in the interest of maximum uniformity, exceptions from the requirements of Circular A–110 shall be permitted only in unusual circumstances. EPA may apply more restrictive requirements to a class of recipients when approved by OMB. EPA may apply less restrictive requirements when awarding small awards, except for those requirements which are statutory. Exceptions on a case-by-case basis may also be made by EPA.

§30.5 Subawards.

Unless sections of Circular A–110 specifically exclude subrecipients from coverage, the provisions of Circular A–110 shall be applied to subrecipients performing work under awards if such subrecipients are institutions of higher education, hospitals or other non-profit organizations. State and local government subrecipients are subject to the provisions of regulations in 40 CFR part 31 implementing the grants management common rule, ''Uniform Administrative Requirements for Grants and Cooperative Agreements to State and Local Governments,''.

§30.6 Availability of OMB circulars.

OMB circulars cited in this part are available from the Office of Management and Budget (OMB) by writing to the Executive Office of the President, Publications Service, 725 17th Street, NW., Suite 200, Washington, DC 20503.

Subpart B—Pre-Award Requirements

§30.10 Purpose.

Sections 30.11 through 30.18 prescribe forms and instructions and other pre-award matters to be used in applying for Federal awards.

§30.11 Pre-award policies.

(a) Use of Grants and Cooperative Agreements, and Contracts. In each instance, EPA shall decide on the appropriate award instrument (i.e., grant, cooperative agreement, or contract). The Federal Grant and Cooperative Agreement Act (31 U.S.C. 6301–08) governs the use of grants, cooperative agreements and contracts. A grant or cooperative agreement shall be used only when the principal purpose of a transaction is to accomplish a public purpose of support or stimulation authorized by Federal statute. The statutory criterion for choosing between grants and cooperative agreements is that for the latter, ''substantial involvement is expected between the executive agency and the State, local government, or other recipient when carrying out the activity contemplated in the agreement.'' Contracts shall be used when the principal purpose is acquisition of property or services for the direct benefit or use of the Federal Government.

(b) *Public notice and priority setting.* EPA shall notify the public of its intended funding priorities for discretionary grant programs, unless funding priorities are established by Federal statute.

(c) By submitting an application to EPA, the applicant grants EPA permission to share the application with technical reviewers both within and outside the Agency.

§ 30.12 Forms for applying for Federal assistance.

(a) EPA shall comply with the applicable report clearance requirements of 5 CFR part 1320, ''Controlling Paperwork Burdens on the Public,'' with regard to all forms used by EPA in place of or as a supplement to the Standard Form 424 (SF–424) series.

(b) Applicants shall use the SF–424 series or those forms and instructions prescribed by EPA.

(c) For Federal programs covered by Executive Order 12372, ''Intergovernmental Review of Federal Programs,'' the applicant shall complete the appropriate sections of the SF–424 (Application for Federal Assistance) indicating whether the application was subject to review by the State Single Point of Contact (SPOC). The name and address of the SPOC for a particular State can be obtained from EPA or the Catalog of Federal Domestic Assistance. The SPOC shall advise the applicant whether the program for which application is made has been selected by that State for review.

(d) If the SF–424 form is not used EPA should indicate whether the application is subject to review by the State under Executive Order 12372.

§ 30.13 Debarment and suspension.

EPA and recipients shall comply with the nonprocurement debarment and suspension regulations in 40 CFR part 32 implementing Executive Orders 12549 and 12689, ''Debarment and Suspension.'' 40 CFR part 32 restricts subawards and contracts with certain parties that are debarred, suspended or otherwise excluded from or ineligible for participation in Federal assistance programs or activities.

§ 30.14 Special award conditions.

If an applicant or recipient: has a history of poor performance, is not financially stable; has a management system that does not meet the standards prescribed in Circular A–110; has not conformed to the terms and conditions of a previous award; or is not otherwise responsible, EPA may impose additional requirements as needed, provided that such applicant or recipient is notified in writing as to: the nature of the additional requirements, the reason why the additional requirements are being imposed, the nature of the corrective action needed, the time allowed for completing the corrective actions, and the method for requesting reconsideration of the additional requirements imposed. Any special conditions shall be promptly removed once the conditions that prompted them have been corrected.

§ 30.15 Metric system of measurement.

The Metric Conversion Act, as amended by the Omnibus Trade and Competitiveness Act (15 U.S.C. 205), declares that the metric system is the preferred measurement system for U.S. trade and commerce. The Act requires each Federal agency to establish a date or dates in consultation with the Secretary of Commerce, when the metric system of measurement will be used in the agency's procurements, grants, and other business-related activities. Metric implementation may take longer where the use of the system is initially impractical or likely to cause significant inefficiencies in the accomplishment of federally-funded activities. EPA shall follow the provisions of Executive Order 12770, ''Metric Usage in Federal Government Programs.''

§ 30.16 Resource Conservation and Recovery Act (RCRA).

Resource Conservation and Recovery Act (RCRA) (Public Law 94–580 codified at 42 U.S.C. 6962). Under the Act, any State agency or agency of a political subdivision of a State which is using appropriated Federal funds must comply with Section 6002. Section 6002 requires that preference be given in procurement programs to the purchase of specific products containing recycled

materials identified in guidelines developed by EPA (40 CFR parts 247 through 254). Accordingly, State and local institutions of higher education, hospitals, and non-profit organizations that receive direct Federal awards or other Federal funds shall give preference in their procurement programs funded with Federal funds to the purchase of recycled products pursuant to EPA's guidelines. Further, pursuant to Executive Order 12873 (dated October 20, 1993) recipients are to print documents/reports prepared under an EPA award of assistance double sided on recycled paper. This requirement does not apply to Standard Forms. These forms are printed on recycled paper as available through the General Services Administration.

§30.17 Certifications and representations.

Unless prohibited by statute or codified regulation, EPA will allow recipients to submit certifications and representations required by statute, Executive Order, or regulation on an annual basis, if the recipients have ongoing and continuing relationships with the agency. Annual certifications and representations shall be signed by responsible officials with the authority to ensure recipients' compliance with the pertinent requirements.

§30.18 Hotel and motel fire safety.

The Hotel and Motel Fire Safety Act of 1990 (Public Law 101–391) establishes a number of fire safety standards which must be met for hotels and motels. The law provides further that Federal funds may not be used to sponsor a conference, meeting, or training seminar held in a hotel or motel which does not meet the law's fire protection and control guidelines. If necessary, the head of the Federal agency may waive this prohibition in the public interest.

Subpart C—Post-Award Requirements

FINANCIAL AND PROGRAM MANAGEMENT

§30.20 Purpose of financial and program management.

Sections 30.21 through 30.28 prescribe standards for financial management systems, methods for making payments and rules for: satisfying cost sharing and matching requirements, accounting for program income, budget revision approvals, making audits, determining allowability of cost, and establishing fund availability.

§30.21 Standards for financial management systems.

(a) EPA shall require recipients to relate financial data to performance data and develop unit cost information whenever practical.

(b) Recipients' financial management systems shall provide for the following.

(1) Accurate, current and complete disclosure of the financial results of each federally-sponsored project or program in accordance with the reporting requirements set forth in §30.52. If EPA requires reporting on an accrual basis from a recipient that maintains its records on other than an accrual basis, the recipient shall not be required to establish an accrual accounting system. These recipients may develop such accrual data for its reports on the basis of an analysis of the documentation on hand.

(2) Records that identify adequately the source and application of funds for federally-sponsored activities. These records shall contain information pertaining to Federal awards, authorizations, obligations, unobligated balances, assets, outlays, income and interest.

(3) Effective control over and accountability for all funds, property and other assets. Recipients shall adequately safeguard all such assets and assure they are used solely for authorized purposes.

(4) Comparison of outlays with budget amounts for each award. Whenever appropriate, financial information should be related to performance and unit cost data.

(5) Written procedures to minimize the time elapsing between the transfer of funds to the recipient from the U.S. Treasury and the issuance or redemption of checks, warrants or payments by other means for program purposes by the recipient. To the extent that the provisions of the Cash Management Improvement Act (CMIA) (Pub. L. 101–453) govern, payment methods of State

agencies, instrumentalities, and fiscal agents shall be consistent with CMIA Treasury-State Agreements or the CMIA default procedures codified at 31 CFR part 205, ''Withdrawal of Cash from the Treasury for Advances under Federal Grant and Other Programs.''

(6) Written procedures for determining the reasonableness, allocability and allowability of costs in accordance with the provisions of the applicable Federal cost principles and the terms and conditions of the award.

(7) Accounting records including cost accounting records that are supported by source documentation.

(c) Where the EPA guarantees or insures the repayment of money borrowed by the recipient, the recipient shall provide adequate bonding and insurance if the bonding and insurance requirements of the recipient are not deemed adequate to protect the interest of the Federal Government.

(d) Recipients shall obtain adequate fidelity bond coverage where coverage to protect the Federal Government's interest is insufficient.

(e) Where bonds are required in the situations described above, the bonds shall be obtained from companies holding certificates of authority as acceptable sureties, as prescribed in 31 CFR part 223, ''Surety Companies Doing Business with the United States.''

§ 30.22 Payment.

(a) Payment methods shall minimize the time elapsing between the transfer of funds from the United States Treasury and the issuance or redemption of checks, warrants, or payment by other means by the recipients. Payment methods of State agencies or instrumentalities shall be consistent with Treasury-State CMIA agreements or default procedures codified at 31 CFR part 205.

(b) Recipients are to be paid in advance, provided they maintain or demonstrate the willingness to maintain: written procedures that minimize the time elapsing between the transfer of funds and disbursement by the recipient; and financial management systems that meet the standards for fund control and accountability as established in § 30.21. Cash advances to a recipient organization shall be limited to the minimum amounts needed and be timed to be in accordance with the actual, immediate cash requirements of the recipient organization in carrying out the purpose of the approved program or project. The timing and amount of cash advances shall be as close as is administratively feasible to the actual disbursements by the recipient organization for direct program or project costs and the proportionate share of any allowable indirect costs.

(c) Whenever possible, advances shall be consolidated to cover anticipated cash needs for all awards made by the EPA to the recipient.

(1) Advance payment mechanisms include, but are not limited to, Treasury check and electronic funds transfer.

(2) Advance payment mechanisms are subject to 31 CFR part 205.

(3) Recipients shall be authorized to submit requests for advances and reimbursements at least monthly when electronic fund transfers are not used.

(d) Requests for Treasury check advance payment shall be submitted on SF–270, ''Request for Advance or Reimbursement,'' or other forms as may be authorized by OMB. This form is not to be used when Treasury check advance payments are made to the recipient automatically through the use of a predetermined payment schedule or if precluded by special instructions for electronic funds transfer.

(e) Reimbursement is the preferred method when the requirements in paragraph (b) of this section cannot be met. EPA may also use this method on any construction agreement, or if the major portion of the construction project is accomplished through private market financing or Federal loans, and the Federal assistance constitutes a minor portion of the project.

(1) When the reimbursement method is used, EPA shall make payment within 30 days after receipt of the billing, unless the billing is improper.

(2) Recipients shall be authorized to submit request for reimbursement at least monthly when electronic funds transfers are not used.

(f) If a recipient cannot meet the criteria for advance payments and EPA has determined that reimbursement is not feasible because the recipient lacks sufficient working capital, EPA may

provide cash on a working capital advance basis. Under this procedure, EPA shall advance cash to the recipient to cover its estimated disbursement needs for an initial period generally geared to the awardee's disbursing cycle. Thereafter, EPA shall reimburse the recipient for its actual cash disbursements. The working capital advance method of payment shall not be used for recipients unwilling or unable to provide timely advances to their subrecipient to meet the subrecipient's actual cash disbursements.

(g) To the extent available, recipients shall disburse funds available from repayments to and interest earned on a revolving fund, program income, rebates, refunds, contract settlements, audit recoveries and interest earned on such funds before requesting additional cash payments.

(h) Unless otherwise required by statute, EPA shall not withhold payments for proper charges made by recipients at any time during the project period unless paragraph (h)(1) or (2) of this section applies.

(1) A recipient has failed to comply with the project objectives, the terms and conditions of the award, or Federal reporting requirements.

(2) The recipient or subrecipient is delinquent in a debt to the United States as defined in OMB Circular A–129, ''Managing Federal Credit Programs.'' Under such conditions, EPA may, upon reasonable notice, inform the recipient that payments shall not be made for obligations incurred after a specified date until the conditions are corrected or the indebtedness to the Federal Government is liquidated.

(i) Standards governing the use of banks and other institutions as depositories of funds advanced under awards are as follows.

(1) Except for situations described in paragraph (i)(2) of this section, EPA shall not require separate depository accounts for funds provided to a recipient or establish any eligibility requirements for depositories for funds provided to a recipient. However, recipients must be able to account for the receipt, obligation and expenditure of funds.

(2) Advances of Federal funds shall be deposited and maintained in insured accounts whenever possible.

(j) Consistent with the national goal of expanding the opportunities for women-owned and minority-owned business enterprises, recipients shall be encouraged to use women-owned and minority-owned banks (a bank which is owned at least 50 percent by women or minority group members).

(k) Recipients shall maintain advances of Federal funds in interest bearing accounts, unless paragraph (k)(1), (2) or (3) of this section applies.

(1) The recipient receives less than $120,000 in Federal awards per year.

(2) The best reasonably available interest bearing account would not be expected to earn interest in excess of $250 per year on Federal cash balances.

(3) The depository would require an average or minimum balance so high that it would not be feasible within the expected Federal and non-Federal cash resources.

(l) For those entities where CMIA and its implementing regulations do not apply, interest earned on Federal advances deposited in interest bearing accounts shall be remitted annually to Department of Health and Human Services, Payment Management System, P.O. Box 6021, Rockville, MD 20852. Interest amounts up to $250 per year may be retained by the recipient for administrative expense. State universities and hospitals shall comply with CMIA, as it pertains to interest. If an entity subject to CMIA uses its own funds to pay pre-award costs for discretionary awards without prior written approval from EPA, it waives its right to recover the interest under CMIA. In keeping with Electronic Funds Transfer rules, (31 CFR Part 206), interest should be remitted to the HHS Payment Management System through an electronic medium such as the FEDWIRE Deposit system. Recipients which do not have this capability should use a check.

(m) Except as noted elsewhere in Circular A–110, only the following forms shall be authorized for the recipients in requesting advances and reimbursements. EPA shall not require more than an original and two copies of these forms.

(1) SF–270, Request for Advance or Reimbursement. EPA shall adopt the SF–270 as a standard form for all non-construction programs when electronic funds transfer or predetermined advance methods are not used. However, EPA has the option of using this form for construction programs in lieu of the SF–271, ''Outlay Report and Request for Reimbursement for Construction Programs.''

(2) SF–271, Outlay Report and Request for Reimbursement for Construction Programs. EPA shall adopt the SF–271 as the standard form to be used for requesting reimbursement for construction programs. However, the SF–270 may be substituted when EPA determines that it provides adequate information to meet its needs.

§ 30.23 Cost sharing or matching.

EPA shall not require cost sharing or matching unless required by statute, regulation, Executive Order, or official Agency policy.

(a) All contributions, including cash and third party in-kind, shall be accepted as part of the recipient's cost sharing or matching when such contributions meet all of the following criteria.

(1) Are verifiable from the recipient's records.

(2) Are not included as contributions for any other federally-assisted project or program.

(3) Are necessary and reasonable for proper and efficient accomplishment of project or program objectives.

(4) Are allowable under the applicable cost principles.

(5) Are not paid by the Federal Government under another award, except where authorized by Federal statute to be used for cost sharing or matching.

(6) Are identified in the approved budget.

(7) Conform to other provisions of Circular A–110, as applicable.

(b) Unrecovered indirect costs may be included as part of cost sharing or matching only with the prior approval of the EPA Award Official.

(c) Values for recipient contributions of services and property shall be established in accordance with the applicable cost principles. If, after consultation with Agency property management personnel, the EPA Award Official authorizes recipients to donate buildings or land for construction or facilities acquisition projects or long-term use, the value of the donated property for cost sharing or matching shall be the lesser of paragraph (c) (1) or (2) of this section.

(1) The certified value of the remaining life of the property recorded in the recipient's accounting records at the time of donation.

(2) The current fair market value. However, when there is sufficient justification, the EPA Award Official may approve the use of the current fair market value of the donated property, even if it exceeds the certified value at the time of donation to the project.

(d) Volunteer services furnished by professional and technical personnel, consultants, and other skilled and unskilled labor may be counted as cost sharing or matching if the service is an integral and necessary part of an approved project or program. Rates for volunteer services shall be consistent with those paid for similar work in the recipient's organization. In those instances in which the required skills are not found in the recipient organization, rates shall be consistent with those paid for similar work in the labor market in which the recipient competes for the kind of services involved. In either case, paid fringe benefits that are reasonable, allowable, and allocable may be included in the valuation.

(e) When an employer other than the recipient furnishes the services of an employee, these services shall be valued at the employee's regular rate of pay (plus an amount of fringe benefits that are reasonable, allowable, and allocable, but exclusive of overhead costs), provided these services are in the same skill for which the employee is normally paid.

(f) Donated supplies may include such items as expendable equipment, office supplies, laboratory supplies or workshop and classroom supplies. Value assessed to donated supplies included in the cost sharing or matching share shall be reasonable and shall not exceed the fair market value of the property at the time of the donation.

(g) The method used for determining cost sharing or matching for donated

equipment, buildings and land for which title passes to the recipient may differ according to the purpose of the award, if paragraph (g) (1) or (2) of this section applies.

(1) If the purpose of the award is to assist the recipient in the acquisition of equipment, buildings or land, the total value of the donated property may be claimed as cost sharing or matching.

(2) If the purpose of the award is to support activities that require the use of equipment, buildings or land, normally only depreciation or use charges for equipment and buildings may be made. However, the full value of equipment or other capital assets and fair rental charges for land may be allowed, provided that the EPA technical program office, after consultation with EPA property management personnel, has approved the charges.

(h) The value of donated property shall be determined in accordance with the usual accounting policies of the recipient, with the following qualifications.

(1) The value of donated land and buildings shall not exceed its fair market value at the time of donation to the recipient as established by an independent appraiser (e.g., certified real property appraiser or General Services Administration representative) and certified by a responsible official of the recipient.

(2) The value of donated equipment shall not exceed the fair market value of equipment of the same age and condition at the time of donation.

(3) The value of donated space shall not exceed the fair rental value of comparable space as established by an independent appraisal of comparable space and facilities in a privately-owned building in the same locality.

(4) The value of loaned equipment shall not exceed its fair rental value.

(5) The following requirements pertain to the recipient's supporting records for in-kind contributions from third parties.

(i) Volunteer services shall be documented and, to the extent feasible, supported by the same methods used by the recipient for its own employees.

(ii) The basis for determining the valuation for personal service, material, equipment, buildings and land shall be documented.

§30.24 Program income.

(a) EPA shall apply the standards set forth in this section in requiring recipient organizations to account for program income related to projects financed in whole or in part with Federal funds.

(b) Except as provided in paragraph (h) of this section, program income earned during the project period shall be retained by the recipient and, in accordance with EPA regulations or the terms and conditions of the award, shall be used in one or more of the ways listed in the following.

(1) Added to funds committed to the project by EPA and recipient and used to further eligible project or program objectives.

(2) Used to finance the non-Federal share of the project or program.

(3) Deducted from the total project or program allowable cost in determining the net allowable costs on which the Federal share of costs is based.

(c) When EPA authorizes the disposition of program income as described in paragraphs (b)(1) or (2) of this section, program income in excess of any limits stipulated shall be used in accordance with paragraph (b)(3) of this section.

(d) In the event that the EPA does not specify in its regulations or the terms and conditions of the award how program income is to be used, paragraph (b)(3) of this section shall apply automatically to all projects or programs except research. For awards that support research, paragraph (b)(1) of this section shall apply automatically unless EPA indicates in the terms and conditions another alternative on the award or the recipient is subject to special award conditions, as indicated in §30.14.

(e) Unless EPA regulations or the terms and conditions of the award provide otherwise, recipients shall have no obligation to the Federal Government regarding program income earned after the end of the project period.

(f) If authorized by EPA regulations or the terms and conditions of the award, costs incident to the generation of program income may be deducted

from gross income to determine program income, provided these costs have not been charged to the award.

(g) Proceeds from the sale of property shall be handled in accordance with the requirements of the Property Standards (See §§ 30.30 through 30.37).

(h) Unless EPA regulations or the terms and condition of the award provide otherwise, recipients shall have no obligation to the Federal Government with respect to program income earned from license fees and royalties for copyrighted material, patents, patent applications, trademarks, and inventions produced under an award. However, Patent and Trademark Amendments (35 U.S.C. 18) apply to inventions made under an experimental, developmental, or research award.

§ 30.25 Revision of budget and program plans.

(a) The budget plan is the financial expression of the project or program as approved during the award process. The budget shall include both the Federal and non-Federal share. It shall be related to performance for program evaluation purposes whenever appropriate.

(b) Recipients are required to report deviations from budget and program plans, and request prior approvals for budget and program plan revisions, in accordance with this section.

(c) For nonconstruction awards, unless EPA regulations provide otherwise, recipients shall request prior written approvals from:

(1) The EPA Award Official for the following:

(i) Change in the scope or the objective of the project or program (even if there is no associated budget revision requiring prior written approval).

(ii) The need for additional Federal funding.

(iii) The inclusion of costs that require prior approval in accordance with OMB Circular A–21, ''Cost Principles for Institutions of Higher Education,'' OMB Circular A–122, ''Cost Principles for Non-Profit Organizations,'' or 45 CFR part 74 Appendix E, ''Principles for Determining Costs Applicable to Research and Development under Grants and Contracts with Hospitals,'' or 48 CFR part 31, ''Contract Cost Principles and Procedures,'' as applicable.

(2) The technical program office for the following:

(i) Change in a key person specified in the application or award document.

(ii) The absence for more than three months, or a 25 percent reduction in time devoted to the project, by the approved project director or principal investigator.

(iii) The transfer of amounts budgeted for indirect costs to absorb increases in direct costs, or vice versa.

(iv) The transfer of funds allotted for training allowances (direct payment to trainees) to other categories of expense.

(v) Unless described in the application and funded in the approved award, the subaward, transfer or contracting out of any work under an award. This provision does not apply to the purchase of supplies, material, equipment or general support services.

(d) No other prior approval requirements for specific items may be imposed unless a deviation has been approved by OMB.

(e) Except for requirements listed in paragraphs (c)(1)(i) and (ii) of this section, the EPA Award Official may waive cost-related and administrative prior written approvals required by this part and OMB cost principles. For awards that support research, these prior approval requirements are automatically waived unless:

(1) EPA provides otherwise in the award or agency regulation or

(2) One of the conditions in paragraph (f)(2)(i) of this section applies.

(f) Recipients are authorized without prior approval or a waiver to:

(1) Incur pre-award costs 90 calendar days prior to award.

(i) Pre-award costs incurred more than 90 calendar days prior to award require the prior approval of the EPA Award Official.

(ii) The applicant must include all pre-award costs in its application.

(iii) The applicant incurs such costs at its own risk (i.e., EPA is under no obligation to reimburse such costs if for any reason the recipient does not receive an award or if the award is less than anticipated and inadequate to cover such costs).

(iv) EPA will only allow pre-award costs without approval if there are sufficient programmatic reasons for incurring the expenditures prior to the award (e.g., time constraints, weather factors, etc.), they are in conformance with the appropriate cost principles, and any procurement complies with the requirements of this rule.

(2) Extend the expiration date of the award one time for up to 12 months.

(i) A one-time extension may not be initiated if:

(A) The terms and conditions of the award prohibit the extension;

(B) The extension requires additional Federal funds; or

(C) The extension involves any change in the approved objectives or scope of the project.

(ii) For one-time extensions, the recipient must notify the EPA Award Official in writing with the supporting reasons and revised expiration date at least 10 days before the expiration date specified in the award.

(iii) This one-time extension may not be exercised merely for the purpose of using unobligated balances.

(3) Carry forward unobligated balances to subsequent funding periods providing the recipient notifies the EPA Award Official by means of the Financial Status Report.

(g) The EPA technical program office may, at its option, restrict the transfer of funds among direct cost categories or programs, functions and activities for awards in which the Federal share of the project exceeds $100,000 and the cumulative amount of such transfers exceeds or is expected to exceed 10 percent of the total budget as last approved by EPA. Except as provided for at paragraph (c) of this section, for awards in which the Federal share is less than $100,000 there are no restrictions on transfers of funds among direct cost categories. EPA shall not permit a transfer that would cause any Federal appropriation or part thereof to be used for purposes other than those consistent with the original intent of the appropriation.

(h) All other changes to nonconstruction budgets, except for the changes described in paragraph (j) of this section, do not require prior approval.

(i) For construction awards, recipients shall request prior written approval promptly from EPA for budget revisions whenever paragraph (h)(1), (2) or (3) of this section applies.

(1) The revision results from changes in the scope or the objective of the project or program.

(2) The need arises for additional Federal funds to complete the project.

(3) A revision is desired which involves specific costs for which prior written approval requirements may be imposed consistent with applicable OMB cost principles listed in §30.27.

(j) No other prior approval requirements for specific items may be imposed unless a deviation has been approved by OMB.

(k) When EPA makes an award that provides support for both construction and nonconstruction work, EPA may require the recipient to request prior approval before making any fund or budget transfers between the two types of work supported.

(l) For both construction and nonconstruction awards, EPA shall require recipients to notify the agency in writing promptly whenever the amount of Federal authorized funds is expected to exceed the needs of the recipient for the project period by more than $5000 or five percent of the Federal award, whichever is greater. This notification shall not be required if an application for additional funding is submitted for a continuation award.

(m) When requesting approval for budget revisions, recipients shall use the budget forms that were used in the application unless the EPA indicates that a letter clearly describing the details of the request will suffice.

(n) Within 30 calendar days from the date of receipt of the request for budget revisions, EPA shall review the request and notify the recipient whether the budget revisions have been approved. If the revision is still under consideration at the end of 30 calendar days, EPA shall inform the recipient in writing of the date when the recipient may expect the decision.

§30.26 Non-Federal audits.

(a) Recipients and subrecipients that are institutions of higher education or other non-profit organizations shall be

subject to the audit requirements contained in OMB Circular A–133, ''Audits of Institutions of Higher Education and Other Non-Profit Institutions.''

(b) State and local governments shall be subject to the audit requirements contained in the Single Audit Act (31 U.S.C. 7501–7) and 40 CFR part 31 implementing OMB Circular A–128, ''Audits of State and Local Governments.''

(c) Hospitals not covered by the audit provisions of OMB Circular A–133 shall be subject to the audit requirements of EPA.

(d) Commercial organizations shall be subject to the audit requirements of EPA or the prime recipient as incorporated into the award document.

§ 30.27 Allowable costs.

(a) For each kind of recipient, there is a set of Federal principles for determining allowable costs. Allowability of costs shall be determined in accordance with the cost principles applicable to the entity incurring the costs. Thus, allowability of costs incurred by State, local or federally-recognized Indian tribal governments is determined in accordance with the provisions of OMB Circular A–87, ''Cost Principles for State and Local Governments.'' The allowability of costs incurred by non-profit organizations is determined in accordance with the provisions of OMB Circular A–122, ''Cost Principles for Non-Profit Organizations.'' The allowability of costs incurred by institutions of higher education is determined in accordance with the provisions of OMB Circular A–21, ''Cost Principles for Educational Institutions.'' The allowability of costs incurred by hospitals is determined in accordance with the provisions of Appendix E of 45 CFR part 74, ''Principles for Determining Costs Applicable to Research and Development Under Grants and Contracts with Hospitals.'' The allowability of costs incurred by commercial organizations and those non-profit organizations listed in Attachment C to Circular A–122 is determined in accordance with the provisions of the Federal Acquisition Regulation (FAR) at 48 CFR part 31. In addition, EPA's annual Appropriations Acts may contain restrictions on the use of assistance funds. For example, the Acts may prohibit the use of funds to support intervention in Federal regulatory or adjudicatory proceedings.

(b) EPA will limit its participation in the salary rate (excluding overhead) paid to individual consultants retained by recipients or by a recipient's contractors or subcontractors to the maximum daily rate for level 4 of the Executive Schedule unless a greater amount is authorized by law. (Recipient's may, however, pay consultants more than this amount.) This limitation applies to consultation services of designated individuals with specialized skills who are paid at a daily or hourly rate. This rate does not include transportation and subsistence costs for travel performed; recipients will pay these in accordance with their normal travel reimbursement practices. Contracts with firms for services which are awarded using the procurement requirements in this part are not affected by this limitation.

§ 30.28 Period of availability of funds.

Where a funding period is specified, a recipient may charge to the grant only allowable costs resulting from obligations incurred during the funding period and any pre-award costs authorized by EPA.

PROPERTY STANDARDS

§ 30.30 Purpose of property standards.

Sections 30.31 through 30.37 set forth uniform standards governing management and disposition of property furnished by the Federal Government whose cost was charged to a project supported by a Federal award. EPA shall require recipients to observe these standards under awards and shall not impose additional requirements, unless specifically required by Federal statute. The recipient may use its own property management standards and procedures provided it observes the provisions of §§ 30.31 through 30.37.

§ 30.31 Insurance coverage.

Recipients shall, at a minimum, provide the equivalent insurance coverage for real property and equipment acquired with Federal funds as provided to property owned by the recipient. Federally-owned property need not be

insured unless required by the terms and conditions of the award.

§30.32 Real property.

EPA shall prescribe requirements for recipients concerning the use and disposition of real property acquired in whole or in part under awards. Unless otherwise provided by statute, such requirements, at a minimum, shall contain the following.

(a) Title to real property shall vest in the recipient subject to the condition that the recipient shall use the real property for the authorized purpose of the project as long as it is needed and shall not encumber the property without approval of EPA.

(b) The recipient shall obtain written approval by EPA for the use of real property in other federally-sponsored projects when the recipient determines that the property is no longer needed for the purpose of the original project. Use in other projects shall be limited to those under federally-sponsored projects (i.e., awards) or programs that have purposes consistent with those authorized for support by EPA.

(c) When the real property is no longer needed as provided in paragraphs (a) and (b) of this section, the recipient shall request disposition instructions from EPA or its successor Federal awarding agency. EPA shall observe one or more of the following disposition instructions.

(1) The recipient may be permitted to retain title without further obligation to the Federal Government after it compensates the Federal Government for that percentage of the current fair market value of the property attributable to the Federal participation in the project.

(2) The recipient may be directed to sell the property under guidelines provided by EPA and pay the Federal Government for that percentage of the current fair market value of the property attributable to the Federal participation in the project (after deducting actual and reasonable selling and fix-up expenses, if any, from the sales proceeds). When the recipient is authorized or required to sell the property, proper sales procedures shall be established that provide for competition to the extent practicable and result in the highest possible return.

(3) The recipient may be directed to transfer title to the property to the Federal Government or to an eligible third party provided that, in such cases, the recipient shall be entitled to compensation for its attributable percentage of the current fair market value of the property.

§30.33 Federally-owned and exempt property.

(a) *Federally-owned property*. (1) Title to federally-owned property remains vested in the Federal Government. Recipients shall submit annually an inventory listing of federally-owned property in their custody to EPA's property management staff. Upon completion of the award or when the property is no longer needed, the recipient shall report the property to EPA's property management staff for further utilization.

(2) If EPA has no further need for the property, it shall be declared excess and reported to the General Services Administration, unless EPA has statutory authority to dispose of the property by alternative methods (e.g., the authority provided by the Federal Technology Transfer Act (15 U.S.C. 3710 (I)) to donate research equipment to educational and non-profit organizations in accordance with Executive Order 12821, ''Improving Mathematics and Science Education in Support of the National Education Goals.'') Appropriate instructions shall be issued to the recipient by EPA's property management staff.

(b) *Exempt property*. When statutory authority exists, EPA has the option to vest title to property acquired with Federal funds in the recipient without further obligation to the Federal Government and under conditions EPA considers appropriate. Such property is ''exempt property.'' Should EPA not establish conditions, title to exempt property upon acquisition shall vest in the recipient without further obligation to the Federal Government.

§30.34 Equipment.

(a) Title to equipment acquired by a recipient with Federal funds shall vest

in the recipient, subject to conditions of this section.

(b) The recipient shall not use equipment acquired with Federal funds to provide services to non-Federal outside organizations for a fee that is less than private companies charge for equivalent services, unless specifically authorized by Federal statute, for as long as the Federal Government retains an interest in the equipment.

(c) The recipient shall use the equipment in the project or program for which it was acquired as long as needed, whether or not the project or program continues to be supported by Federal funds and shall not encumber the property without approval of EPA. When no longer needed for the original project or program, the recipient shall use the equipment in connection with its other federally-sponsored activities, in the following order of priority: Activities sponsored by EPA, then activities sponsored by other Federal awarding agencies.

(d) During the time that equipment is used on the project or program for which it was acquired, the recipient shall make it available for use on other projects or programs if such other use will not interfere with the work on the project or program for which the equipment was originally acquired. First preference for such other use shall be given to other projects or programs sponsored by EPA; second preference shall be given to projects or programs sponsored by other Federal awarding agencies. If the equipment is owned by the Federal Government, use on other activities not sponsored by the Federal Government shall be permissible if authorized by EPA. User charges shall be treated as program income.

(e) When acquiring replacement equipment, the recipient may use the equipment to be replaced as trade-in or sell the equipment and use the proceeds to offset the costs of the replacement equipment subject to the approval of EPA.

(f) The recipient's property management standards for equipment acquired with Federal funds and federally-owned equipment shall include all of the following.

(1) Equipment records shall be maintained accurately and shall include the following information.

(i) A description of the equipment.

(ii) Manufacturer's serial number, model number, Federal stock number, national stock number, or other identification number.

(iii) Source of the equipment, including the award number.

(iv) Whether title vests in the recipient or the Federal Government.

(v) Acquisition date (or date received, if the equipment was furnished by the Federal Government) and cost.

(vi) Information from which one can calculate the percentage of Federal participation in the cost of the equipment (not applicable to equipment furnished by the Federal Government).

(vii) Location and condition of the equipment and the date the information was reported.

(viii) Unit acquisition cost.

(ix) Ultimate disposition data, including date of disposal and sales price or the method used to determine current fair market value where a recipient compensates EPA for its share.

(2) Equipment owned by the Federal Government shall be identified to indicate Federal ownership.

(3) A physical inventory of equipment shall be taken and the results reconciled with the equipment records at least once every two years. Any differences between quantities determined by the physical inspection and those shown in the accounting records shall be investigated to determine the causes of the difference. The recipient shall, in connection with the inventory, verify the existence, current utilization, and continued need for the equipment.

(4) A control system shall be in effect to insure adequate safeguards to prevent loss, damage, or theft of the equipment. Any loss, damage, or theft of equipment shall be investigated and fully documented; if the equipment was owned by the Federal Government, the recipient shall promptly notify EPA.

(5) Adequate maintenance procedures shall be implemented to keep the equipment in good condition.

(6) Where the recipient is authorized or required to sell the equipment, proper sales procedures shall be established

which provide for competition to the extent practicable and result in the highest possible return.

(g) When the recipient no longer needs the equipment, the equipment may be used for other activities in accordance with the following standards. For equipment with a current per unit fair market value of $5000 or more, the recipient may retain the equipment for other uses provided that compensation is made to the original Federal awarding agency or its successor. The amount of compensation shall be computed by applying the percentage of Federal participation in the cost of the original project or program to the current fair market value of the equipment. If the recipient has no need for the equipment, the recipient shall request disposition instructions from EPA. EPA shall determine whether the equipment can be used to meet the agency's requirements. If no requirement exists within that agency, the availability of the equipment shall be reported to the General Services Administration by EPA to determine whether a requirement for the equipment exists in other Federal agencies. EPA shall issue instructions to the recipient no later than 120 calendar days after the recipient's request and the following procedures shall govern.

(1) If so instructed or if disposition instructions are not issued within 120 calendar days after the recipient's request, the recipient shall sell the equipment and reimburse EPA an amount computed by applying to the sales proceeds the percentage of Federal participation in the cost of the original project or program. However, the recipient shall be permitted to deduct and retain from the Federal share $500 or ten percent of the proceeds, whichever is less, for the recipient's selling and handling expenses.

(2) If the recipient is instructed to ship the equipment elsewhere, the recipient shall be reimbursed by the Federal Government by an amount which is computed by applying the percentage of the recipient's participation in the cost of the original project or program to the current fair market value of the equipment, plus any reasonable shipping or interim storage costs incurred.

(3) If the recipient is instructed to otherwise dispose of the equipment, the recipient shall be reimbursed by EPA for such costs incurred in its disposition.

(4) EPA may reserve the right to transfer the title to the Federal Government or to a third party named by the Federal Government when such third party is otherwise eligible under existing statutes. Such transfer shall be subject to the following standards.

(i) The equipment shall be appropriately identified in the award or otherwise made known to the recipient in writing.

(ii) EPA shall issue disposition instructions within 120 calendar days after receipt of a final inventory. The final inventory shall list all equipment acquired with grant funds and federally-owned equipment. If EPA fails to issue disposition instructions within the 120 calendar day period, the recipient shall apply the standards of this section, as appropriate.

(iii) When EPA exercises its right to take title, the equipment shall be subject to the provisions for federally-owned equipment.

§30.35 Supplies and other expendable property.

(a) Title to supplies and other expendable property shall vest in the recipient upon acquisition. If there is a residual inventory of unused supplies exceeding $5000 in total aggregate value upon termination or completion of the project or program and the supplies are not needed for any other federally-sponsored project or program, the recipient shall retain the supplies for use on non-Federal sponsored activities or sell them, but shall, in either case, compensate the Federal Government for its share. The amount of compensation shall be computed in the same manner as for equipment.

(b) The recipient shall not use supplies acquired with Federal funds to provide services to non-Federal outside organizations for a fee that is less than private companies charge for equivalent services, unless specifically authorized by Federal statute as long as the Federal Government retains an interest in the supplies.

§ 30.36 Intangible property.

(a) The recipient may copyright any work that is subject to copyright and was developed, or for which ownership was purchased, under an award. EPA reserves a royalty-free, nonexclusive and irrevocable right to reproduce, publish, or otherwise use the work for Federal purposes, and to authorize others to do so.

(b) Recipients are subject to applicable regulations governing patents and inventions, including government-wide regulations issued by the Department of Commerce at 37 CFR part 401, ''Rights to Inventions Made by Nonprofit Organizations and Small Business Firms Under Government Grants, Contracts and Cooperative Agreements.''

(c) Unless waived by EPA, the Federal Government has the right to paragraphs (c) (1) and (2) of this section.

(1) Obtain, reproduce, publish or otherwise use the data first produced under an award.

(2) Authorize others to receive, reproduce, publish, or otherwise use such data for Federal purposes.

(d) Title to intangible property and debt instruments acquired under an award or subaward vests upon acquisition in the recipient. The recipient shall use that property for the originally-authorized purpose, and the recipient shall not encumber the property without approval of EPA. When no longer needed for the originally authorized purpose, disposition of the intangible property shall occur in accordance with the provisions of § 30.34(g).

§ 30.37 Property trust relationship.

Real property, equipment, intangible property and debt instruments that are acquired or improved with Federal funds shall be held in trust by the recipient as trustee for the beneficiaries of the project or program under which the property was acquired or improved. Agencies may require recipients to record liens or other appropriate notices of record to indicate that personal or real property has been acquired or improved with Federal funds and that use and disposition conditions apply to the property.

PROCUREMENT STANDARDS

§ 30.40 Purpose of procurement standards.

Sections 30.41 through 30.48 set forth standards for use by recipients in establishing procedures for the procurement of supplies and other expendable property, equipment, real property and other services with Federal funds. These standards are furnished to ensure that such materials and services are obtained in an effective manner and in compliance with the provisions of applicable Federal statutes and Executive Orders. No additional procurement standards or requirements shall be imposed by EPA upon recipients, unless specifically required by Federal statute or Executive Order or approved by OMB.

§ 30.41 Recipient responsibilities.

The standards contained in this part do not relieve the recipient of the contractual responsibilities arising under its contract(s). The recipient is the responsible authority, without recourse to EPA, regarding the settlement and satisfaction of all contractual and administrative issues arising out of procurements entered into in support of an award or other agreement. This includes disputes, claims, protests of award, source evaluation or other matters of a contractual nature. Matters concerning violation of statute are to be referred to such Federal, State or local authority as may have proper jurisdiction.

§ 30.42 Codes of conduct.

The recipient shall maintain written standards of conduct governing the performance of its employees engaged in the award and administration of contracts. No employee, officer, or agent shall participate in the selection, award, or administration of a contract supported by Federal funds if a real or apparent conflict of interest would be involved. Such a conflict would arise when the employee, officer, or agent, any member of his or her immediate family, his or her partner, or an organization which employs or is about to employ any of the parties indicated herein, has a financial or other interest in the firm selected for an award. The

officers, employees, and agents of the recipient shall neither solicit nor accept gratuities, favors, or anything of monetary value from contractors, or parties to subagreements. However, recipients may set standards for situations in which the financial interest is not substantial or the gift is an unsolicited item of nominal value. The standards of conduct shall provide for disciplinary actions to be applied for violations of such standards by officers, employees, or agents of the recipient.

§30.43 Competition.

All procurement transactions shall be conducted in a manner to provide, to the maximum extent practical, open and free competition. The recipient shall be alert to organizational conflicts of interest as well as noncompetitive practices among contractors that may restrict or eliminate competition or otherwise restrain trade. In order to ensure objective contractor performance and eliminate unfair competitive advantage, contractors that develop or draft specifications, requirements, statements of work, invitations for bids and/or requests for proposals shall be excluded from competing for such procurements. Awards shall be made to the bidder or offeror whose bid or offer is responsive to the solicitation and is most advantageous to the recipient, price, quality and other factors considered. Solicitations shall clearly set forth all requirements that the bidder or offeror shall fulfill in order for the bid or offer to be evaluated by the recipient. Any and all bids or offers may be rejected when it is in the recipient's interest to do so.

§30.44 Procurement procedures.

(a) All recipients shall establish written procurement procedures. These procedures shall provide for, at a minimum, that paragraphs (a) (1), (2) and (3) of this section apply.

(1) Recipients avoid purchasing unnecessary items.

(2) Where appropriate, an analysis is made of lease and purchase alternatives to determine which would be the most economical and practical procurement for the Federal Government.

(3) Solicitations for goods and services provide for all of the following.

(i) A clear and accurate description of the technical requirements for the material, product or service to be procured. In competitive procurements, such a description shall not contain features which unduly restrict competition.

(ii) Requirements which the bidder/offeror must fulfill and all other factors to be used in evaluating bids or proposals.

(iii) A description, whenever practicable, of technical requirements in terms of functions to be performed or performance required, including the range of acceptable characteristics or minimum acceptable standards.

(iv) The specific features of ''brand name or equal'' descriptions that bidders are required to meet when such items are included in the solicitation.

(v) The acceptance, to the extent practicable and economically feasible, of products and services dimensioned in the metric system of measurement.

(vi) Preference, to the extent practicable and economically feasible, for products and services that conserve natural resources and protect the environment and are energy efficient.

(b) Positive efforts shall be made by recipients to utilize small businesses, minority-owned firms, and women's business enterprises, whenever possible. Recipients of Federal awards shall take all of the following steps to further this goal.

(1) Ensure that small businesses, minority-owned firms, and women's business enterprises are used to the fullest extent practicable.

(2) Make information on forthcoming opportunities available and arrange time frames for purchases and contracts to encourage and facilitate participation by small businesses, minority-owned firms, and women's business enterprises.

(3) Consider in the contract process whether firms competing for larger contracts intend to subcontract with small businesses, minority-owned firms, and women's business enterprises.

(4) Encourage contracting with consortiums of small businesses, minority-

owned firms and women's business enterprises when a contract is too large for one of these firms to handle individually.

(5) Use the services and assistance, as appropriate, of such organizations as the Small Business Administration and the Department of Commerce's Minority Business Development Agency in the solicitation and utilization of small businesses, minority-owned firms and women's business enterprises.

(6) If the prime contractor awards subcontracts, requiring the contractor to take steps in paragraphs (b)(1) through (5) of this section.

(c) The type of procuring instruments used (e.g., fixed price contracts, cost reimbursable contracts, purchase orders, and incentive contracts) shall be determined by the recipient but shall be appropriate for the particular procurement and for promoting the best interest of the program or project involved. The ''cost-plus-a-percentage-of-cost'' or ''percentage of construction cost'' methods of contracting shall not be used.

(d) Contracts shall be made only with responsible contractors who possess the potential ability to perform successfully under the terms and conditions of the proposed procurement. Consideration shall be given to such matters as contractor integrity, record of past performance, financial and technical resources or accessibility to other necessary resources. In certain circumstances, contracts with certain parties are restricted by agencies' implementation of Executive Orders 12549 and 12689, ''Debarment and Suspension.''

(e) Recipients shall, on request, make available for EPA, pre-award review and procurement documents, such as request for proposals or invitations for bids, independent cost estimates, etc., when any of the following conditions apply.

(1) A recipient's procurement procedures or operation fails to comply with the procurement standards in EPA's implementation of Circular A–110.

(2) The procurement is expected to exceed the small purchase threshold fixed at 41 U.S.C. 403 (11) (currently $100,000) and is to be awarded without competition or only one bid or offer is received in response to a solicitation.

(3) The procurement, which is expected to exceed the small purchase threshold, specifies a ''brand name'' product.

(4) The proposed award over the small purchase threshold is to be awarded to other than the apparent low bidder under a sealed bid procurement.

(5) A proposed contract modification changes the scope of a contract or increases the contract amount by more than the amount of the small purchase threshold.

§ 30.45 Cost and price analysis.

Some form of cost or price analysis shall be made and documented in the procurement files in connection with every procurement action. Price analysis may be accomplished in various ways, including the comparison of price quotations submitted, market prices and similar indicia, together with discounts. Cost analysis is the review and evaluation of each element of cost to determine reasonableness, allocability and allowability.

§ 30.46 Procurement records.

Procurement records and files for purchases in excess of the small purchase threshold shall include the following at a minimum: Basis for contractor selection; justification for lack of competition when competitive bids or offers are not obtained; and basis for award cost or price.

§ 30.47 Contract administration.

A system for contract administration shall be maintained to ensure contractor conformance with the terms, conditions and specifications of the contract and to ensure adequate and timely follow up of all purchases. Recipients shall evaluate contractor performance and document, as appropriate, whether contractors have met the terms, conditions and specifications of the contract.

§ 30.48 Contract provisions.

The recipient shall include, in addition to provisions to define a sound and complete agreement, the following provisions in all contracts. The following

provisions shall also be applied to subcontracts.

(a) Contracts in excess of the small purchase threshold shall contain contractual provisions or conditions that allow for administrative, contractual, or legal remedies in instances in which a contractor violates or breaches the contract terms, and provide for such remedial actions as may be appropriate.

(b) All contracts in excess of the small purchase threshold shall contain suitable provisions for termination by the recipient, including the manner by which termination shall be effected and the basis for settlement. In addition, such contracts shall describe conditions under which the contract may be terminated for default as well as conditions where the contract may be terminated because of circumstances beyond the control of the contractor.

(c) Except as otherwise required by statute, an award that requires the contracting (or subcontracting) for construction or facility improvements shall provide for the recipient to follow its own requirements relating to bid guarantees, performance bonds, and payment bonds unless the construction contract or subcontract exceeds $100,000. For those contracts or subcontracts exceeding $100,000, EPA may accept the bonding policy and requirements of the recipient, provided EPA has made a determination that the Federal Government's interest is adequately protected. If such a determination has not been made, the minimum requirements shall be as follows.

(1) A bid guarantee from each bidder equivalent to five percent of the bid price. The ''bid guarantee'' shall consist of a firm commitment such as a bid bond, certified check, or other negotiable instrument accompanying a bid as assurance that the bidder shall, upon acceptance of his bid, execute such contractual documents as may be required within the time specified.

(2) A performance bond on the part of the contractor for 100 percent of the contract price. A ''performance bond'' is one executed in connection with a contract to secure fulfillment of all the contractor's obligations under such contract.

(3) A payment bond on the part of the contractor for 100 percent of the contract price. A ''payment bond'' is one executed in connection with a contract to assure payment as required by statute of all persons supplying labor and material in the execution of the work provided for in the contract.

(4) Where bonds are required in the situations described herein, the bonds shall be obtained from companies holding certificates of authority as acceptable sureties pursuant to 31 CFR part 223, ''Surety Companies Doing Business with the United States.''

(d) All negotiated contracts (except those for less than the small purchase threshold) awarded by recipients shall include a provision to the effect that the recipient, EPA, the Comptroller General of the United States, or any of their duly authorized representatives, shall have access to any books, documents, papers and records of the contractor which are directly pertinent to a specific program for the purpose of making audits, examinations, excerpts and transcriptions.

(e) All contracts, including small purchases, awarded by recipients and their contractors shall contain the procurement provisions of the Appendix to Circular A–110, as applicable.

REPORTS AND RECORDS

§30.50 Purpose of reports and records.

Sections 30.51 through 30.53 set forth the procedures for monitoring and reporting on the recipient's financial and program performance and the necessary standard reporting forms. They also set forth record retention requirements.

§30.51 Monitoring and reporting program performance.

(a) Recipients are responsible for managing and monitoring each project, program, subaward, function or activity supported by the award. Recipients shall monitor subawards to ensure subrecipients have met the audit requirements as delineated in §30.26.

(b) EPA shall prescribe the frequency with which the performance reports shall be submitted. Except as provided in paragraph (f) of this section, performance reports shall not be required

more frequently than quarterly or, less frequently than annually. Annual reports shall be due 90 calendar days after the grant year; quarterly or semi-annual reports shall be due 30 days after the reporting period. EPA may require annual reports before the anniversary dates of multiple year awards in lieu of these requirements. The final performance reports are due 90 calendar days after the expiration or termination of the award.

(c) If inappropriate, a final technical or performance report shall not be required after completion of the project.

(d) When required, performance reports shall generally contain, for each award, brief information on each of the following.

(1) A comparison of actual accomplishments with the goals and objectives established for the period, the findings of the investigator, or both. Whenever appropriate and the output of programs or projects can be readily quantified, such quantitative data should be related to cost data for computation of unit costs.

(2) Reasons why established goals were not met, if appropriate.

(3) Other pertinent information including, when appropriate, analysis and explanation of cost overruns or high unit costs.

(e) Recipients shall not be required to submit more than the original and two copies of performance reports.

(f) Recipients shall immediately notify EPA of developments that have a significant impact on the award-supported activities. Also, notification shall be given in the case of problems, delays, or adverse conditions which materially impair the ability to meet the objectives of the award. This notification shall include a statement of the action taken or contemplated, and any assistance needed to resolve the situation.

(g) EPA may make site visits, as needed.

(h) EPA shall comply with clearance requirements of 5 CFR part 1320 when requesting performance data from recipients.

§ 30.52 Financial reporting.

(a) The following forms or such other forms as may be approved by OMB are authorized for obtaining financial information from recipients.

(1) *SF–269 or SF–269A, Financial Status Report.* (i) EPA shall require recipients to use the SF–269 or SF–269A to report the status of funds for all nonconstruction projects or programs. However, EPA has the option of not requiring the SF–269 or SF–269A when the SF–270, Request for Advance or Reimbursement, or SF–272, Report of Federal Cash Transactions, is determined to provide adequate information to meet its needs, except that a final SF–269 or SF–269A shall be required at the completion of the project when the SF–270 is used only for advances.

(ii) EPA shall prescribe whether the report shall be on a cash or accrual basis. If EPA requires accrual information and the recipient's accounting records are not normally kept on the accrual basis, the recipient shall not be required to convert its accounting system, but shall develop such accrual information through best estimates based on an analysis of the documentation on hand.

(iii) EPA shall determine the frequency of the Financial Status Report for each project or program, considering the size and complexity of the particular project or program. However, the report shall not be required more frequently than quarterly or less frequently than annually. A final report shall be required at the completion of the agreement.

(iv) EPA shall require recipients to submit the SF–269 or SF–269A (an original and no more than two copies) no later than 30 days after the end of each specified reporting period for quarterly and semi-annual reports, and 90 calendar days for annual and final reports. Extensions of reporting due dates may be approved by EPA upon request of the recipient.

(2) *SF–272, Report of Federal Cash Transactions.* (i) When funds are advanced to recipients EPA shall require each recipient to submit the SF–272 and, when necessary, its continuation sheet, SF–272A. EPA shall use this report to monitor cash advanced to recipients and to obtain disbursement information for each agreement with the recipients.

(ii) EPA may require forecasts of Federal cash requirements in the ''Remarks'' section of the report.

(iii) When practical and deemed necessary, EPA may require recipients to report in the ''Remarks'' section the amount of cash advances received in excess of three days. Recipients shall provide short narrative explanations of actions taken to reduce the excess balances.

(iv) Recipients shall be required to submit not more than the original and two copies of the SF–272 15 calendar days following the end of each quarter. EPA may require a monthly report from those recipients receiving advances totaling $1 million or more per year.

(v) EPA may waive the requirement for submission of the SF–272 for any one of the following reasons:

(A) When monthly advances do not exceed $25,000 per recipient, provided that such advances are monitored through other forms contained in this section;

(B) If, in EPA's opinion, the recipient's accounting controls are adequate to minimize excessive Federal advances; or

(C) When the electronic payment mechanisms provide adequate data.

(b) When EPA needs additional information or more frequent reports, the following shall be observed.

(1) When additional information is needed to comply with legislative requirements, EPA shall issue instructions to require recipients to submit such information under the ''Remarks'' section of the reports.

(2) When EPA determines that a recipient's accounting system does not meet the standards in §30.21, additional pertinent information to further monitor awards may be obtained upon written notice to the recipient until such time as the system is brought up to standard. EPA, in obtaining this information, shall comply with report clearance requirements of 5 CFR part 1320.

(3) EPA may shade out any line item on any report if not necessary.

(4) EPA may accept the identical information from the recipients in machine readable format or computer printouts or electronic outputs in lieu of prescribed formats.

(5) EPA may provide computer or electronic outputs to recipients when such expedites or contributes to the accuracy of reporting.

§30.53 Retention and access requirements for records.

(a) This section sets forth requirements for record retention and access to records for awards to recipients. EPA shall not impose any other record retention or access requirements upon recipients.

(b) Financial records, supporting documents, statistical records, and all other records pertinent to an award shall be retained for a period of three years from the date of submission of the final expenditure report or, for awards that are renewed quarterly or annually, from the date of the submission of the quarterly or annual financial report, as authorized by EPA. The only exceptions are the following.

(1) If any litigation, claim, or audit is started before the expiration of the 3-year period, the records shall be retained until all litigation, claims or audit findings involving the records have been resolved and final action taken.

(2) Records for real property and equipment acquired with Federal funds shall be retained for 3 years after final disposition.

(3) When records are transferred to or maintained by EPA, the 3-year retention requirement is not applicable to the recipient.

(4) Indirect cost rate proposals, cost allocations plans, etc. as specified in paragraph (g) of this section.

(c) Copies of original records may be substituted for the original records if authorized by EPA.

(d) EPA shall request transfer of certain records to its custody from recipients when it determines that the records possess long term retention value. However, in order to avoid duplicate recordkeeping, EPA may make arrangements for recipients to retain any records that are continuously needed for joint use.

(e) EPA, the Inspector General, Comptroller General of the United States, or any of their duly authorized representatives, have the right of timely and unrestricted access to any

books, documents, papers, or other records of recipients that are pertinent to the awards, in order to make audits, examinations, excerpts, transcripts and copies of such documents. This right also includes timely and reasonable access to a recipient's personnel for the purpose of interview and discussion related to such documents. The rights of access in this paragraph are not limited to the required retention period, but shall last as long as records are retained.

(f) Unless required by statute, EPA shall not place restrictions on recipients that limit public access to the records of recipients that are pertinent to an award, except when it can be demonstrated that such records shall be kept confidential and would have been exempted from disclosure pursuant to the Freedom of Information Act (5 U.S.C. 552) if the records had belonged to EPA.

(g) Indirect cost rate proposals, cost allocations plans, etc. Paragraphs (g)(1) and (g)(2) of this section apply to the following types of documents, and their supporting records: indirect cost rate computations or proposals, cost allocation plans, and any similar accounting computations of the rate at which a particular group of costs is chargeable (such as computer usage chargeback rates or composite fringe benefit rates).

(1) *If submitted for negotiation*. If the recipient submits to EPA or the subrecipient submits to the recipient the proposal, plan, or other computation to form the basis for negotiation of the rate, then the 3-year retention period for its supporting records starts on the date of such submission.

(2) *If not submitted for negotiation*. If the recipient is not required to submit to EPA or the subrecipient is not required to submit to the recipient the proposal, plan, or other computation for negotiation purposes, then the 3-year retention period for the proposal, plan, or other computation and its supporting records starts at the end of the fiscal year (or other accounting period) covered by the proposal, plan, or other computation.

§ 30.54 Quality assurance.

If the project officer determines that the grantee's project involves environmentally related measurements or data generation, the grantee shall develop and implement quality assurance practices consisting of policies, procedures, specifications, standards, and documentation sufficient to produce data of quality adequate to meet project objectives and to minimize loss of data due to out-of-control conditions or malfunctions. The quality system must comply with the requirements of ANSI/ASQC E4, ''Specifications and Guidelines for Quality Systems for Environmental Data Collection and Environmental Technology Programs'', which may be obtained from the National Technical Information Service (NTIS), 5885 Port Royal Road, Springfield, VA 22161.

TERMINATION AND ENFORCEMENT

§ 30.60 Purpose of termination and enforcement.

Sections 30.61 and 30.62 set forth uniform suspension, termination and enforcement procedures.

§ 30.61 Termination.

(a) Awards may be terminated in whole or in part only if paragraph (a)(1), (2) or (3) of this section applies.

(1) By EPA, if a recipient materially fails to comply with the terms and conditions of an award.

(2) By EPA with the consent of the recipient, in which case the two parties shall agree upon the termination conditions, including the effective date and, in the case of partial termination, the portion to be terminated.

(3) By the recipient upon sending to EPA written notification setting forth the reasons for such termination, the effective date, and, in the case of partial termination, the portion to be terminated. However, if EPA determines in the case of partial termination that the reduced or modified portion of the grant will not accomplish the purposes for which the grant was made, it may terminate the grant in its entirety under either paragraph (a)(1) or (2) of this secion.

(b) If costs are allowed under an award, the responsibilities of the recipient referred to in §30.71(a), including those for property management as applicable, shall be considered in the termination of the award, and provision shall be made for continuing responsibilities of the recipient after termination, as appropriate.

§30.62 Enforcement.

(a) *Remedies for noncompliance.* If a recipient materially fails to comply with the terms and conditions of an award, whether stated in a Federal statute, regulation, assurance, application, or notice of award, EPA may, in addition to imposing any of the special conditions outlined in §30.14, take one or more of the following actions, as appropriate in the circumstances.

(1) Temporarily withhold cash payments pending correction of the deficiency by the recipient or more severe enforcement action by EPA.

(2) Disallow (that is, deny both use of funds and any applicable matching credit for) all or part of the cost of the activity or action not in compliance.

(3) Wholly or partly suspend or terminate the current award.

(4) Withhold further awards for the project or program.

(5) Take other remedies that may be legally available.

(b) *Hearings and appeals.* In taking an enforcement action, EPA shall provide the recipient an opportunity for hearing, appeal, or other administrative proceeding to which the recipient is entitled under any statute or regulation applicable to the action involved. EPA's Dispute Provisions found at 40 CFR part 31, subpart F, Disputes, are applicable to assistance awarded under the provisions of this part.

(c) *Effects of suspension and termination.* Costs of a recipient resulting from obligations incurred by the recipient during a suspension or after termination of an award are not allowable unless EPA expressly authorizes them in the notice of suspension or termination or subsequently. Other recipient costs during suspension or after termination which are necessary and not reasonably avoidable are allowable if paragraphs (c)(1) and (2) of this section apply.

(1) The costs result from obligations which were properly incurred by the recipient before the effective date of suspension or termination, are not in anticipation of it, and in the case of a termination, are noncancellable.

(2) The costs would be allowable if the award were not suspended or expired normally at the end of the funding period in which the termination takes effect.

(d) *Relationship to debarment and suspension.* The enforcement remedies identified in this section, including suspension and termination, do not preclude a recipient from being subject to debarment and suspension under Executive Orders 12549 and 12689 and EPA's implementing regulations (see §30.13).

§30.63 Disputes.

(a) Disagreements should be resolved at the lowest possible level.

(b) If an agreement cannot be reached, the EPA disputes decision official will provide a written final decision. The EPA disputes decision official is the individual designated by the award official to resolve disputes concerning assistance agreements. If the dispute cannot be resolved the procedures outlined at 40 CFR part 31, subpart F, should be followed.

Subpart D—After-the-Award Requirements

§30.70 Purpose.

Sections 30.71 through 30.73 contain closeout procedures and other procedures for subsequent disallowances and adjustments.

§30.71 Closeout procedures.

(a) Recipients shall submit, within 90 calendar days after the date of completion of the award, all financial, performance, and other reports as required by the terms and conditions of the award. EPA may approve extensions when requested by the recipient.

(b) Unless EPA authorizes an extension, a recipient shall liquidate all obligations incurred under the award not later than 90 calendar days after the

funding period or the date of completion as specified in the terms and conditions of the award or in agency implementing instructions.

(c) EPA shall make prompt payments to a recipient for allowable reimbursable costs under the award being closed out.

(d) The recipient shall promptly refund any balances of unobligated cash that EPA has advanced or paid and that is not authorized to be retained by the recipient for use in other projects. OMB Circular A–129 governs unreturned amounts that become delinquent debts.

(e) When authorized by the terms and conditions of the award, EPA shall make a settlement for any upward or downward adjustments to the Federal share of costs after closeout reports are received.

(f) The recipient shall account for any real and personal property acquired with Federal funds or received from the Federal Government in accordance with §§ 30.31 through 30.37.

(g) In the event a final audit has not been performed prior to the closeout of an award, EPA shall retain the right to recover an appropriate amount after fully considering the recommendations on disallowed costs resulting from the final audit.

§ 30.72 Subsequent adjustments and continuing responsibilities.

(a) The closeout of an award does not affect any of the following.

(1) The right of EPA to disallow costs and recover funds on the basis of a later audit or other review.

(2) The obligation of the recipient to return any funds due as a result of later refunds, corrections, or other transactions.

(3) Audit requirements in § 30.26.

(4) Property management requirements in §§ 30.31 through 30.37.

(5) Records retention as required in § 30.53.

(b) After closeout of an award, a relationship created under an award may be modified or ended in whole or in part with the consent of EPA and the recipient, provided the responsibilities of the recipient referred to in § 30.73(a), including those for property management as applicable, are considered and provisions made for continuing responsibilities of the recipient, as appropriate.

§ 30.73 Collection of amounts due.

(a) Any funds paid to a recipient in excess of the amount to which the recipient is finally determined to be entitled under the terms and conditions of the award constitute a debt to the Federal Government. If not paid within a reasonable period after the demand for payment, EPA may reduce the debt by paragraph (a) (1), (2) or (3) of this section.

(1) Making an administrative offset against other requests for reimbursements.

(2) Withholding advance payments otherwise due to the recipient.

(3) Taking other action permitted by statute.

(b) Except as otherwise provided by law, EPA shall charge interest on an overdue debt in accordance with 4 CFR Chapter II, ''Federal Claims Collection Standards.''

APPENDIX TO PART 30—CONTRACT PROVISIONS

All contracts awarded by a recipient, including small purchases, shall contain the following provisions as applicable:

1. Equal Employment Opportunity—All contracts shall contain a provision requiring compliance with Executive Order 11246, ''Equal Employment Opportunity,'' as amended by Executive Order 11375, ''Amending Executive Order 11246 Relating to Equal Employment Opportunity,'' and as supplemented by regulations at 41 CFR part 60, ''Office of Federal Contract Compliance Programs, Equal Employment Opportunity, Department of Labor.''

2. Copeland ''Anti-Kickback'' Act (18 U.S.C. 874 and 40 U.S.C. 276c)—All contracts and subgrants in excess of $100,000 for construction or repair awarded by recipients and subrecipients shall include a provision for compliance with the Copeland ''Anti-Kickback'' Act (18 U.S.C. 874), as supplemented by Department of Labor regulations (29 CFR part 3, ''Contractors and Subcontractors on Public Building or Public Work Financed in Whole or in Part by Loans or Grants from the United States''). The Act provides that each contractor or subrecipient shall be prohibited from inducing, by any means, any person employed in the construction, completion, or repair of public work, to give up any part of the compensation to which he is

otherwise entitled. The recipient shall report all suspected or reported violations to EPA.

3. Davis-Bacon Act, as amended (40 U.S.C. 276a to a–7)—When required by Federal program legislation, all construction contracts awarded by the recipients and subrecipients of more than $2000 shall include a provision for compliance with the Davis-Bacon Act (40 U.S.C. 276a to a–7) and as supplemented by Department of Labor regulations (29 CFR part 5, ''Labor Standards Provisions Applicable to Contracts Governing Federally Financed and Assisted Construction''). Under this Act, contractors shall be required to pay wages to laborers and mechanics at a rate not less than the minimum wages specified in a wage determination made by the Secretary of Labor. In addition, contractors shall be required to pay wages not less than once a week. The recipient shall place a copy of the current prevailing wage determination issued by the Department of Labor in each solicitation and the award of a contract shall be conditioned upon the acceptance of the wage determination. The recipient shall report all suspected or reported violations to EPA.

4. Contract Work Hours and Safety Standards Act (40 U.S.C. 327–333)—Where applicable, all contracts awarded by recipients in excess of $100,000 for construction contracts and in excess of $2500 for other contracts that involve the employment of mechanics or laborers shall include a provision for compliance with sections 102 and 107 of the Contract Work Hours and Safety Standards Act (40 U.S.C. 327–333), as supplemented by Department of Labor regulations (29 CFR part 5). Under section 102 of the Act, each contractor shall be required to compute the wages of every mechanic and laborer on the basis of a standard work week of 40 hours. Work in excess of the standard work week is permissible provided that the worker is compensated at a rate of not less than 1/2 times the basic rate of pay for all hours worked in excess of 40 hours in the work week. Section 107 of the Act is applicable to construction work and provides that no laborer or mechanic shall be required to work in surroundings or under working conditions which are unsanitary, hazardous or dangerous. These requirements do not apply to the purchases of supplies or materials or articles ordinarily available on the open market, or contracts for transportation or transmission of intelligence.

5. Rights to Inventions Made Under a Contract or Agreement—Contracts or agreements for the performance of experimental, developmental, or research work shall provide for the rights of the Federal Government and the recipient in any resulting invention in accordance with 37 CFR part 401, ''Rights to Inventions Made by Nonprofit Organizations and Small Business Firms Under Government Grants, Contracts and Cooperative Agreements,'' and any implementing regulations issued by EPA.

6. Clean Air Act (42 U.S.C. 7401 et seq.) and the Federal Water Pollution Control Act (33 U.S.C. 1251 et seq.), as amended—Contracts and subgrants of amounts in excess of $100,000 shall contain a provision that requires the recipient to agree to comply with all applicable standards, orders or regulations issued pursuant to the Clean Air Act (42 U.S.C. 7401 et seq.) and the Federal Water Pollution Control Act as amended (33 U.S.C. 1251 et seq.). Violations shall be reported to the Regional Office of the Environmental Protection Agency (EPA).

7. Byrd Anti-Lobbying Amendment (31 U.S.C. 1352)—Contractors who apply or bid for an award of more than $100,000 shall file the required certification. Each tier certifies to the tier above that it will not and has not used Federal appropriated funds to pay any person or organization for influencing or attempting to influence an officer or employee of any agency, a member of Congress, officer or employee of Congress, or an employee of a member of Congress in connection with obtaining any Federal contract, grant or any other award covered by 31 U.S.C. 1352. Each tier shall also disclose any lobbying with non-Federal funds that takes place in connection with obtaining any Federal award. Such disclosures are forwarded from tier to tier up to the recipient.

8. Debarment and Suspension (Executive Orders 12549 and 12689)—No contract shall be made to parties listed on the General Services Administration's List of Parties Excluded from Federal Procurement or Nonprocurement Programs in accordance with Executive Orders 12549 and 12689, ''Debarment and Suspension.'' This list contains the names of parties debarred, suspended, or otherwise excluded by agencies, and contractors declared ineligible under statutory or regulatory authority other than Executive Order 12549. Contractors with awards that exceed the small purchase threshold shall provide the required certification regarding its exclusion status and that of its principal employees.

PART 31—UNIFORM ADMINISTRATIVE REQUIREMENTS FOR GRANTS AND COOPERATIVE AGREEMENTS TO STATE AND LOCAL GOVERNMENTS

Subpart A—General

Sec.

31.1 Purpose and scope of this part.
31.2 Scope of subpart.
31.3 Definitions.
31.4 Applicability.
31.5 Effect on other issuances.

31.6 Additions and exceptions.

Subpart B—Pre-Award Requirements

31.10 Forms for applying for grants.
31.11 State plans.
31.12 Special grant or subgrant conditions for ''high-risk'' grantees.
31.13 Principal environmental statutory provisions applicable to EPA assistance awards.

Subpart C—Post-Award Requirements

FINANCIAL ADMINISTRATION

31.20 Standards for financial management systems.
31.21 Payment.
31.22 Allowable costs.
31.23 Period of availability of funds.
31.24 Matching or cost sharing.
31.25 Program income.
31.26 Non-Federal audit.

CHANGES, PROPERTY, AND SUBAWARDS

31.30 Changes.
31.31 Real property.
31.32 Equipment.
31.33 Supplies.
31.34 Copyrights.
31.35 Subawards to debarred and suspended parties.
31.36 Procurement.
31.37 Subgrants.

REPORTS, RECORDS, RETENTION, AND ENFORCEMENT

31.40 Monitoring and reporting program performance.
31.41 Financial reporting.
31.42 Retention and access requirements for records.
31.43 Enforcement.
31.44 Termination for convenience.
31.45 Quality assurance.

Subpart D—After-the-Grant Requirements

31.50 Closeout.
31.51 Later disallowances and adjustments.
31.52 Collection of amounts due.

Subpart E—Entitlements [Reserved]

Subpart F—Disputes

31.70 Disputes

APPENDIX A TO PART 31—AUDIT REQUIREMENTS FOR STATE AND LOCAL GOVERNMENT RECIPIENTS

AUTHORITY: 33 U.S.C. 1251 *et seq.*; 42 U.S.C. 7401 *et seq.*; 42 U.S.C. 6901 *et seq.*; 42 U.S.C. 300f *et seq.*; 7 U.S.C. 136 *et seq.*; 15 U.S.C. 2601 *et seq.*; 42 U.S.C. 9601 *et seq.*; 20 U.S.C. 4011 *et seq.*; 33 U.S.C. 1401 *et seq.*

SOURCE: 53 FR 8075 and 8087, Mar. 11, 1988, unless otherwise noted.

Subpart A—General

§ 31.1 Purpose and scope of this part.

This part establishes uniform administrative rules for Federal grants and cooperative agreements and subawards to State, local and Indian tribal governments.

§ 31.2 Scope of subpart.

This subpart contains general rules pertaining to this part and procedures for control of exceptions from this part.

§ 31.3 Definitions.

As used in this part:

Accrued expenditures mean the charges incurred by the grantee during a given period requiring the provision of funds for: (1) Goods and other tangible property received; (2) services performed by employees, contractors, subgrantees, subcontractors, and other payees; and (3) other amounts becoming owed under programs for which no current services or performance is required, such as annuities, insurance claims, and other benefit payments.

Accrued income means the sum of: (1) Earnings during a given period from services performed by the grantee and goods and other tangible property delivered to purchasers, and (2) amounts becoming owed to the grantee for which no current services or performance is required by the grantee.

Acquisition cost of an item of purchased equipment means the net invoice unit price of the property including the cost of modifications, attachments, accessories, or auxiliary apparatus necessary to make the property usable for the purpose for which it was acquired. Other charges such as the cost of installation, transportation, taxes, duty or protective in-transit insurance, shall be included or excluded from the unit acquisition cost in accordance with the grantee's regular accounting practices.

Administrative requirements mean those matters common to grants in general, such as financial management,

kinds and frequency of reports, and retention of records. These are distinguished from *programmatic* requirements, which concern matters that can be treated only on a program-by-program or grant-by-grant basis, such as kinds of activities that can be supported by grants under a particular program.

Awarding agency means (1) with respect to a grant, the Federal agency, and (2) with respect to a subgrant, the party that awarded the subgrant.

Cash contributions means the grantee's cash outlay, including the outlay of money contributed to the grantee or subgrantee by other public agencies and institutions, and private organizations and individuals. When authorized by Federal legislation, Federal funds received from other assistance agreements may be considered as grantee or subgrantee cash contributions.

Contract means (except as used in the definitions for *grant* and *subgrant* in this section and except where qualified by *Federal*) a procurement contract under a grant or subgrant, and means a procurement subcontract under a contract.

Cost sharing or matching means the value of the third party in-kind contributions and the portion of the costs of a federally assisted project or program not borne by the Federal Government.

Cost-type contract means a contract or subcontract under a grant in which the contractor or subcontractor is paid on the basis of the costs it incurs, with or without a fee.

Equipment means tangible, nonexpendable, personal property having a useful life of more than one year and an acquisition cost of $5,000 or more per unit. A grantee may use its own definition of equipment provided that such definition would at least include all equipment defined above.

Expenditure report means: (1) For nonconstruction grants, the SF–269 ''Financial Status Report'' (or other equivalent report); (2) for construction grants, the SF–271 ''Outlay Report and Request for Reimbursement'' (or other equivalent report).

Federally recognized Indian tribal government means the governing body or a governmental agency of any Indian tribe, band, nation, or other organized group or community (including any Native village as defined in section 3 of the Alaska Native Claims Settlement Act, 85 Stat 688) certified by the Secretary of the Interior as eligible for the special programs and services provided by him through the Bureau of Indian Affairs.

Government means a State or local government or a federally recognized Indian tribal government.

Grant means an award of financial assistance, including cooperative agreements, in the form of money, or property in lieu of money, by the Federal Government to an eligible grantee. The term does not include technical assistance which provides services instead of money, or other assistance in the form of revenue sharing, loans, loan guarantees, interest subsidies, insurance, or direct appropriations. Also, the term does not include assistance, such as a fellowship or other lump sum award, which the grantee is not required to account for.

Grantee means the government to which a grant is awarded and which is accountable for the use of the funds provided. The grantee is the entire legal entity even if only a particular component of the entity is designated in the grant award document.

Local government means a county, municipality, city, town, township, local public authority (including any public and Indian housing agency under the United States Housing Act of 1937) school district, special district, intrastate district, council of governments (whether or not incorporated as a nonprofit corporation under state law), any other regional or interstate government entity, or any agency or instrumentality of a local government.

Obligations means the amounts of orders placed, contracts and subgrants awarded, goods and services received, and similar transactions during a given period that will require payment by the grantee during the same or a future period.

OMB means the U.S. Office of Management and Budget.

Outlays (expenditures) mean charges made to the project or program. They may be reported on a cash or accrual basis. For reports prepared on a cash

basis, outlays are the sum of actual cash disbursement for direct charges for goods and services, the amount of indirect expense incurred, the value of in-kind contributions applied, and the amount of cash advances and payments made to contractors and subgrantees. For reports prepared on an accrued expenditure basis, outlays are the sum of actual cash disbursements, the amount of indirect expense incurred, the value of inkind contributions applied, and the new increase (or decrease) in the amounts owed by the grantee for goods and other property received, for services performed by employees, contractors, subgrantees, subcontractors, and other payees, and other amounts becoming owed under programs for which no current services or performance are required, such as annuities, insurance claims, and other benefit payments.

Percentage of completion method refers to a system under which payments are made for construction work according to the percentage of completion of the work, rather than to the grantee's cost incurred.

Prior approval means documentation evidencing consent prior to incurring specific cost.

Real property means land, including land improvements, structures and appurtenances thereto, excluding movable machinery and equipment.

Share, when referring to the awarding agency's portion of real property, equipment or supplies, means the same percentage as the awarding agency's portion of the acquiring party's total costs under the grant to which the acquisition costs under the grant to which the acquisition cost of the property was charged. Only costs are to be counted—not the value of third-party in-kind contributions.

State means any of the several States of the United States, the District of Columbia, the Commonwealth of Puerto Rico, any territory or possession of the United States, or any agency or instrumentality of a State exclusive of local governments. The term does not include any public and Indian housing agency under United States Housing Act of 1937.

Subgrant means an award of financial assistance in the form of money, or property in lieu of money, made under a grant by a grantee to an eligible subgrantee. The term includes financial assistance when provided by contractual legal agreement, but does not include procurement purchases, nor does it include any form of assistance which is excluded from the definition of *grant* in this part.

Subgrantee means the government or other legal entity to which a subgrant is awarded and which is accountable to the grantee for the use of the funds provided.

Supplies means all tangible personal property other than *equipment* as defined in this part.

Suspension means depending on the context, either (1) temporary withdrawal of the authority to obligate grant funds pending corrective action by the grantee or subgrantee or a decision to terminate the grant, or (2) an action taken by a suspending official in accordance with agency regulations implementing E.O. 12549 to immediately exclude a person from participating in grant transactions for a period, pending completion of an investigation and such legal or debarment proceedings as may ensue.

Termination means permanent withdrawal of the authority to obligate previously-awarded grant funds before that authority would otherwise expire. It also means the voluntary relinquishment of that authority by the grantee or subgrantee. *Termination* does not include:

(1) Withdrawal of funds awarded on the basis of the grantee's underestimate of the unobligated balance in a prior period;

(2) Withdrawal of the unobligated balance as of the expiration of a grant;

(3) Refusal to extend a grant or award additional funds, to make a competing or noncompeting continuation, renewal, extension, or supplemental award; or

(4) Voiding of a grant upon determination that the award was obtained fraudulently, or was otherwise illegal or invalid from inception.

Terms of a grant or subgrant mean all requirements of the grant or subgrant, whether in statute, regulations, or the award document.

Third party in-kind contributions mean property or services which benefit a

federally assisted project or program and which are contributed by non-Federal third parties without charge to the grantee, or a cost-type contractor under the grant agreement.

Unliquidated obligations for reports prepared on a cash basis mean the amount of obligations incurred by the grantee that has not been paid. For reports prepared on an accrued expenditure basis, they represent the amount of obligations incurred by the grantee for which an outlay has not been recorded.

Unobligated balance means the portion of the funds authorized by the Federal agency that has not been obligated by the grantee and is determined by deducting the cumulative obligations from the cumulative funds authorized.

§ 31.4 Applicability.

(a) *General.* Subparts A–D of this part apply to all grants and subgrants to governments, except where inconsistent with Federal statutes or with regulations authorized in accordance with the exception provision of § 31.6, or:

(1) Grants and subgrants to State and local institutions of higher education or State and local hospitals.

(2) The block grants authorized by the Omnibus Budget Reconciliation Act of 1981 (Community Services; Preventive Health and Health Services; Alcohol, Drug Abuse, and Mental Health Services; Maternal and Child Health Services; Social Services; Low-Income Home Energy Assistance; States' Program of Community Development Block Grants for Small Cities; and Elementary and Secondary Education other than programs administered by the Secretary of Education under Title V, Subtitle D, Chapter 2, Section 583—the Secretary's discretionary grant program) and Titles I–III of the Job Training Partnership Act of 1982 and under the Public Health Services Act (Section 1921), Alcohol and Drug Abuse Treatment and Rehabilitation Block Grant and Part C of Title V, Mental Health Service for the Homeless Block Grant).

(3) Entitlement grants to carry out the following programs of the Social Security Act:

(i) Aid to Needy Families with Dependent Children (Title IV–A of the Act, not including the Work Incentive Program (WIN) authorized by section 402(a)19(G); HHS grants for WIN are subject to this part);

(ii) Child Support Enforcement and Establishment of Paternity (Title IV–D of the Act);

(iii) Foster Care and Adoption Assistance (Title IV–E of the Act);

(iv) Aid to the Aged, Blind, and Disabled (Titles I, X, XIV, and XVI–AABD of the Act); and

(v) Medical Assistance (Medicaid) (Title XIX of the Act) not including the State Medicaid Fraud Control program authorized by section 1903(a)(6)(B).

(4) Entitlement grants under the following programs of The National School Lunch Act:

(i) School Lunch (section 4 of the Act),

(ii) Commodity Assistance (section 6 of the Act),

(iii) Special Meal Assistance (section 11 of the Act),

(iv) Summer Food Service for Children (section 13 of the Act), and

(v) Child Care Food Program (section 17 of the Act).

(5) Entitlement grants under the following programs of The Child Nutrition Act of 1966:

(i) Special Milk (section 3 of the Act), and

(ii) School Breakfast (section 4 of the Act).

(6) Entitlement grants for State Administrative expenses under The Food Stamp Act of 1977 (section 16 of the Act).

(7) A grant for an experimental, pilot, or demonstration project that is also supported by a grant listed in paragraph (a)(3) of this section;

(8) Grant funds awarded under subsection 412(e) of the Immigration and Nationality Act (8 U.S.C. 1522(e)) and subsection 501(a) of the Refugee Education Assistance Act of 1980 (Pub. L. 96–422, 94 Stat. 1809), for cash assistance, medical assistance, and supplemental security income benefits to refugees and entrants and the administrative costs of providing the assistance and benefits;

(9) Grants to local education agencies under 20 U.S.C. 236 through 241–1(a),

and 242 through 244 (portions of the Impact Aid program), except for 20 U.S.C. 238(d)(2)(c) and 240(f) (Entitlement Increase for Handicapped Children); and

(10) Payments under the Veterans Administration's State Home Per Diem Program (38 U.S.C. 641(a)).

(b) *Entitlement programs.* Entitlement programs enumerated above in § 31.4(a)(3) through (8) are subject to subpart E.

§ 31.5 Effect on other issuances.

All other grants administration provisions of codified program regulations, program manuals, handbooks and other nonregulatory materials which are inconsistent with this part are superseded, except to the extent they are required by statute, or authorized in accordance with the exception provision in § 31.6.

§ 31.6 Additions and exceptions

(a) For classes of grants and grantees subject to this part, Federal agencies may not impose additional administrative requirements except in codified regulations published in the FEDERAL REGISTER.

(b) Exceptions for classes of grants or grantees may be authorized only by OMB.

(c) Exceptions on a case-by-case basis and for subgrantees may be authorized by the affected Federal agencies.

(1) In the Environmental Protection Agency, the Director, Grants Administration Division, is authorized to grant the exceptions.

(d) The EPA Director is also authorized to approve exceptions, on a class or an individual case basis, to EPA program—specific assistance regulations other than those which implement statutory and executive order requirements.

[53 FR 8068 and 8087, Mar. 11, 1988, and amended at 53 FR 8075, Mar. 11, 1988]

Subpart B—Pre-Award Requirements

§ 31.10 Forms for applying for grants.

(a) *Scope.* (1) This section prescribes forms and instructions to be used by governmental organizations (except hospitals and institutions of higher education operated by a government) in applying for grants. This section is not applicable, however, to formula grant programs which do not require applicants to apply for funds on a project basis.

(2) This section applies only to applications to Federal agencies for grants, and is not required to be applied by grantees in dealing with applicants for subgrants. However, grantees are encouraged to avoid more detailed or burdensome application requirements for subgrants.

(b) *Authorized forms and instructions for governmental organizations.* (1) In applying for grants, applicants shall only use standard application forms or those prescribed by the granting agency with the approval of OMB under the Paperwork Reduction Act of 1980.

(2) Applicants are not required to submit more than the original and two copies of preapplications or applications.

(3) Applicants must follow all applicable instructions that bear OMB clearance numbers. Federal agencies may specify and describe the programs, functions, or activities that will be used to plan, budget, and evaluate the work under a grant. Other supplementary instructions may be issued only with the approval of OMB to the extent required under the Paperwork Reduction Act of 1980. For any standard form, except the SF–424 facesheet, Federal agencies may shade out or instruct the applicant to disregard any line item that is not needed.

(4) When a grantee applies for additional funding (such as a continuation or supplemental award) or amends a previously submitted application, only the affected pages need be submitted. Previously submitted pages with information that is still current need not be resubmitted.

§ 31.11 State plans.

(a) *Scope.* The statutes for some programs require States to submit plans before receiving grants. Under regulations implementing Executive Order 12372, ''Intergovernmental Review of Federal Programs,'' States are allowed to simplify, consolidate and substitute plans. This section contains additional provisions for plans that are subject to

regulations implementing the Executive Order.

(b) *Requirements.* A State need meet only Federal administrative or programmatic requirements for a plan that are in statutes or codified regulations.

(c) *Assurances.* In each plan the State will include an assurance that the State shall comply with all applicable Federal statutes and regulations in effect with respect to the periods for which it receives grant funding. For this assurance and other assurances required in the plan, the State may:

(1) Cite by number the statutory or regulatory provisions requiring the assurances and affirm that it gives the assurances required by those provisions,

(2) Repeat the assurance language in the statutes or regulations, or

(3) Develop its own language to the extent permitted by law.

(d) *Amendments.* A State will amend a plan whenever necessary to reflect: (1) New or revised Federal statutes or regulations or (2) a material change in any State law, organization, policy, or State agency operation. The State will obtain approval for the amendment and its effective date but need submit for approval only the amended portions of the plan.

§31.12 Special grant or subgrant conditions for "high-risk" grantees.

(a) A grantee or subgrantee may be considered ''high risk'' if an awarding agency determines that a grantee or subgrantee:

(1) Has a history of unsatisfactory performance, or

(2) Is not financially stable, or

(3) Has a management system which does not meet the management standards set forth in this part, or

(4) Has not conformed to terms and conditions of previous awards, or

(5) Is otherwise not responsible; and if the awarding agency determines that an award will be made, special conditions and/or restrictions shall correspond to the high risk condition and shall be included in the award.

(b) Special conditions or restrictions may include:

(1) Payment on a reimbursement basis;

(2) Withholding authority to proceed to the next phase until receipt of evidence of acceptable performance within a given funding period;

(3) Requiring additional, more detailed financial reports;

(4) Additional project monitoring;

(5) Requiring the grantee or subgrantee to obtain technical or management assistance; or

(6) Establishing additional prior approvals.

(c) If an awarding agency decides to impose such conditions, the awarding official will notify the grantee or subgrantee as early as possible, in writing, of:

(1) The nature of the special conditions/restrictions;

(2) The reason(s) for imposing them;

(3) The corrective actions which must be taken before they will be removed and the time allowed for completing the corrective actions and

(4) The method of requesting reconsideration of the conditions/restrictions imposed.

§31.13 Principal environmental statutory provisions applicable to EPA assistance awards.

Grantees shall comply with all applicable Federal laws including:

(a) Section 306 of the Clean Air Act, (42 U.S.C. 7606).

(b) Section 508 of the Federal Water Pollution Control Act, as amended, (33 U.S.C. 1368).

(c) Section 1424(e) of the Safe Drinking Water Act, (42 U.S.C. 300h–3(e)).

[53 FR 8075, Mar. 11, 1988]

Subpart C—Post-Award Requirements

FINANCIAL ADMINISTRATION

§31.20 Standards for financial management systems.

(a) A State must expand and account for grant funds in accordance with State laws and procedures for expending and accounting for its own funds. Fiscal control and accounting procedures of the State, as well as its subgrantees and cost-type contractors, must be sufficient to—

(1) Permit preparation of reports required by this part and the statutes authorizing the grant, and

(2) Permit the tracing of funds to a level of expenditures adequate to establish that such funds have not been used in violation of the restrictions and prohibitions of applicable statutes.

(b) The financial management systems of other grantees and subgrantees must meet the following standards:

(1) *Financial reporting.* Accurate, current, and complete disclosure of the financial results of financially assisted activities must be made in accordance with the financial reporting requirements of the grant or subgrant.

(2) *Accounting records.* Grantees and subgrantees must maintain records which adequately identify the source and application of funds provided for financially-assisted activities. These records must contain information pertaining to grant or subgrant awards and authorizations, obligations, unobligated balances, assets, liabilities, outlays or expenditures, and income.

(3) *Internal control.* Effective control and accountability must be maintained for all grant and subgrant cash, real and personal property, and other assets. Grantees and subgrantees must adequately safeguard all such property and must assure that it is used solely for authorized purposes.

(4) *Budget control.* Actual expenditures or outlays must be compared with budgeted amounts for each grant or subgrant. Financial information must be related to performance or productivity data, including the development of unit cost information whenever appropriate or specifically required in the grant or subgrant agreement. If unit cost data are required, estimates based on available documentation will be accepted whenever possible.

(5) *Allowable cost.* Applicable OMB cost principles, agency program regulations, and the terms of grant and subgrant agreements will be followed in determining the reasonableness, allowability, and allocability of costs.

(6) *Source documentation.* Accounting records must be supported by such source documentation as cancelled checks, paid bills, payrolls, time and attendance records, contract and subgrant award documents, etc.

(7) *Cash management.* Procedures for minimizing the time elapsing between the transfer of funds from the U.S. Treasury and disbursement by grantees and subgrantees must be followed whenever advance payment procedures are used. Grantees must establish reasonable procedures to ensure the receipt of reports on subgrantees' cash balances and cash disbursements in sufficient time to enable them to prepare complete and accurate cash transactions reports to the awarding agency. When advances are made by letter-of-credit or electronic transfer of funds methods, the grantee must make drawdowns as close as possible to the time of making disbursements. Grantees must monitor cash drawdowns by their subgrantees to assure that they conform substantially to the same standards of timing and amount as apply to advances to the grantees.

(c) An awarding agency may review the adequacy of the financial management system of any applicant for financial assistance as part of a preaward review or at any time subsequent to award.

§ 31.21 Payment.

(a) *Scope.* This section prescribes the basic standard and the methods under which a Federal agency will make payments to grantees, and grantees will make payments to subgrantees and contractors.

(b) *Basic standard.* Methods and procedures for payment shall minimize the time elapsing between the transfer of funds and disbursement by the grantee or subgrantee, in accordance with Treasury regulations at 31 CFR part 205.

(c) *Advances.* Grantees and subgrantees shall be paid in advance, provided they maintain or demonstrate the willingness and ability to maintain procedures to minimize the time elapsing between the transfer of the funds and their disbursement by the grantee or subgrantee.

(d) *Reimbursement.* Reimbursement shall be the preferred method when the requirements in paragraph (c) of this

section are not met. Grantees and subgrantees may also be paid by reimbursement for any construction grant. Except as otherwise specified in regulation, Federal agencies shall not use the percentage of completion method to pay construction grants. The grantee or subgrantee may use that method to pay its construction contractor, and if it does, the awarding agency's payments to the grantee or subgrantee will be based on the grantee's or subgrantee's actual rate of disbursement.

(e) *Working capital advances.* If a grantee cannot meet the criteria for advance payments described in paragraph (c) of this section, and the Federal agency has determined that reimbursement is not feasible because the grantee lacks sufficient working capital, the awarding agency may provide cash or a working capital advance basis. Under this procedure the awarding agency shall advance cash to the grantee to cover its estimated disbursement needs for an initial period generally geared to the grantee's disbursing cycle. Thereafter, the awarding agency shall reimburse the grantee for its actual cash disbursements. The working capital advance method of payment shall not be used by grantees or subgrantees if the reason for using such method is the unwillingness or inability of the grantee to provide timely advances to the subgrantee to meet the subgrantee's actual cash disbursements.

(f) *Effect of program income, refunds, and audit recoveries on payment.* (1) Grantees and subgrantees shall disburse repayments to and interest earned on a revolving fund before requesting additional cash payments for the same activity.

(2) Except as provided in paragraph (f)(1) of this section, grantees and subgrantees shall disburse program income, rebates, refunds, contract settlements, audit recoveries and interest earned on such funds before requesting additional cash payments.

(g) *Withholding payments.* (1) Unless otherwise required by Federal statute, awarding agencies shall not withhold payments for proper charges incurred by grantees or subgrantees unless—

(i) The grantee or subgrantee has failed to comply with grant award conditions or

(ii) The grantee or subgrantee is indebted to the United States.

(2) Cash withheld for failure to comply with grant award condition, but without suspension of the grant, shall be released to the grantee upon subsequent compliance. When a grant is suspended, payment adjustments will be made in accordance with §31.43(c).

(3) A Federal agency shall not make payment to grantees for amounts that are withheld by grantees or subgrantees from payment to contractors to assure satisfactory completion of work. Payments shall be made by the Federal agency when the grantees or subgrantees actually disburse the withheld funds to the contractors or to escrow accounts established to assure satisfactory completion of work.

(h) *Cash depositories.* (1) Consistent with the national goal of expanding the opportunities for minority business enterprises, grantees and subgrantees are encouraged to use minority banks (a bank which is owned at least 50 percent by minority group members). A list of minority owned banks can be obtained from the Minority Business Development Agency, Department of Commerce, Washington, DC 20230.

(2) A grantee or subgrantee shall maintain a separate bank account only when required by Federal-State agreement.

(i) *Interest earned on advances.* Except for interest earned on advances of funds exempt under the Intergovernmental Cooperation Act (31 U.S.C. 6501 *et seq.*) and the Indian Self-Determination Act (23 U.S.C. 450), grantees and subgrantees shall promptly, but at least quarterly, remit interest earned on advances to the Federal agency. The grantee or subgrantee may keep interest amounts up to $100 per year for administrative expenses.

§31.22 Allowable costs.

(a) *Limitation on use of funds.* Grant funds may be used only for:

(1) The allowable costs of the grantees, subgrantees and cost-type contractors, including allowable costs in the form of payments to fixed-price contractors; and

(2) Reasonable fees or profit to cost-type contractors but not any fee or profit (or other increment above allowable costs) to the grantee or subgrantee.

(b) *Applicable cost principles.* For each kind of organization, there is a set of Federal principles for determining allowable costs. Allowable costs will be determined in accordance with the cost principles applicable to the organization incurring the costs. The following chart lists the kinds of organizations and the applicable cost principles.

For the costs of a—	Use the principles in—
State, local or Indian tribal government.	OMB Circular A–87.
Private nonprofit organization other than an (1) institution of higher education, (2) hospital, or (3) organization named in OMB Circular A–122 as not subject to that circular.	OBM Circular A–122.
Educational institutions.	OMB Circular A–21.
For-profit organization other than a hospital and an organization named in OBM Circular A–122 as not subject to that circular.	48 CFR part 31, Contract Cost Principles and Procedures, or uniform cost accounting standards that comply with cost principles acceptable to the Federal agency.

§ 31.23 Period of availability of funds.

(a) *General.* Where a funding period is specified, a grantee may charge to the award only costs resulting from obligations of the funding period unless carryover of unobligated balances is permitted, in which case the carryover balances may be charged for costs resulting from obligations of the subsequent funding period.

(b) *Liquidation of obligations.* A grantee must liquidate all obligations incurred under the award not later than 90 days after the end of the funding period (or as specified in a program regulation) to coincide with the submission of the annual Financial Status Report (SF–269). The Federal agency may extend this deadline at the request of the grantee.

§ 31.24 Matching or cost sharing.

(a) *Basic rule: Costs and contributions acceptable.* With the qualifications and exceptions listed in paragraph (b) of this section, a matching or cost sharing requirement may be satisfied by either or both of the following:

(1) Allowable costs incurred by the grantee, subgrantee or a cost-type contractor under the assistance agreement. This includes allowable costs borne by non-Federal grants or by other cash donations from non-Federal third parties.

(2) The value of third party in-kind contributions applicable to the period to which the cost sharing or matching requirements applies.

(b) *Qualifications and exceptions*—(1) *Costs borne by other Federal grant agreements.* Except as provided by Federal statute, a cost sharing or matching requirement may not be met by costs borne by another Federal grant. This prohibition does not apply to income earned by a grantee or subgrantee from a contract awarded under another Federal grant.

(2) *General revenue sharing.* For the purpose of this section, general revenue sharing funds distributed under 31 U.S.C. 6702 are not considered Federal grant funds.

(3) *Cost or contributions counted towards other Federal costs-sharing requirements.* Neither costs nor the values of third party in-kind contributions may count towards satisfying a cost sharing or matching requirement of a grant agreement if they have been or will be counted towards satisfying a cost sharing or matching requirement of another Federal grant agreement, a Federal procurement contract, or any other award of Federal funds.

(4) *Costs financed by program income.* Costs financed by program income, as defined in § 31.25, shall not count towards satisfying a cost sharing or matching requirement unless they are expressly permitted in the terms of the assistance agreement. (This use of general program income is described in § 31.25(g).)

(5) *Services or property financed by income earned by contractors.* Contractors under a grant may earn income from the activities carried out under the contract in addition to the amounts earned from the party awarding the contract. No costs of services or property supported by this income may count toward satisfying a cost sharing or matching requirement unless other

provisions of the grant agreement expressly permit this kind of income to be used to meet the requirement.

(6) *Records.* Costs and third party in-kind contributions counting towards satisfying a cost sharing or matching requirement must be verifiable from the records of grantees and subgrantee or cost-type contractors. These records must show how the value placed on third party in-kind contributions was derived. To the extent feasible, volunteer services will be supported by the same methods that the organization uses to support the allocability of regular personnel costs.

(7) *Special standards for third party in-kind contributions.* (i) Third party in-kind contributions count towards satisfying a cost sharing or matching requirement only where, if the party receiving the contributions were to pay for them, the payments would be allowable costs.

(ii) Some third party in-kind contributions are goods and services that, if the grantee, subgrantee, or contractor receiving the contribution had to pay for them, the payments would have been an indirect costs. Costs sharing or matching credit for such contributions shall be given only if the grantee, subgrantee, or contractor has established, along with its regular indirect cost rate, a special rate for allocating to individual projects or programs the value of the contributions.

(iii) A third party in-kind contribution to a fixed-price contract may count towards satisfying a cost sharing or matching requirement only if it results in:

(A) An increase in the services or property provided under the contract (without additional cost to the grantee or subgrantee) or

(B) A cost savings to the grantee or subgrantee.

(iv) The values placed on third party in-kind contributions for cost sharing or matching purposes will conform to the rules in the succeeding sections of this part. If a third party in-kind contribution is a type not treated in those sections, the value placed upon it shall be fair and reasonable.

(c) *Valuation of donated services*—(1) *Volunteer services.* Unpaid services provided to a grantee or subgrantee by individuals will be valued at rates consistent with those ordinarily paid for similar work in the grantee's or subgrantee's organization. If the grantee or subgrantee does not have employees performing similar work, the rates will be consistent with those ordinarily paid by other employers for similar work in the same labor market. In either case, a reasonable amount for fringe benefits may be included in the valuation.

(2) *Employees of other organizations.* When an employer other than a grantee, subgrantee, or cost-type contractor furnishes free of charge the services of an employee in the employee's normal line of work, the services will be valued at the employee's regular rate of pay exclusive of the employee's fringe benefits and overhead costs. If the services are in a different line of work, paragraph (c)(1) of this section applies.

(d) *Valuation of third party donated supplies and loaned equipment or space.* (1) If a third party donates supplies, the contribution will be valued at the market value of the supplies at the time of donation.

(2) If a third party donates the use of equipment or space in a building but retains title, the contribution will be valued at the fair rental rate of the equipment or space.

(e) *Valuation of third party donated equipment, buildings, and land.* If a third party donates equipment, buildings, or land, and title passes to a grantee or subgrantee, the treatment of the donated property will depend upon the purpose of the grant or subgrant, as follows:

(1) *Awards for capital expenditures.* If the purpose of the grant or subgrant is to assist the grantee or subgrantee in the acquisition of property, the market value of that property at the time of donation may be counted as cost sharing or matching,

(2) *Other awards.* If assisting in the acquisition of property is not the purpose of the grant or subgrant, paragraphs (e)(2) (i) and (ii) of this section apply:

(i) If approval is obtained from the awarding agency, the market value at the time of donation of the donated equipment or buildings and the fair rental rate of the donated land may be

counted as cost sharing or matching. In the case of a subgrant, the terms of the grant agreement may require that the approval be obtained from the Federal agency as well as the grantee. In all cases, the approval may be given only if a purchase of the equipment or rental of the land would be approved as an allowable direct cost. If any part of the donated property was acquired with Federal funds, only the non-federal share of the property may be counted as cost-sharing or matching.

(ii) If approval is not obtained under paragraph (e)(2)(i) of this section, no amount may be counted for donated land, and only depreciation or use allowances may be counted for donated equipment and buildings. The depreciation or use allowances for this property are not treated as third party in-kind contributions. Instead, they are treated as costs incurred by the grantee or subgrantee. They are computed and allocated (usually as indirect costs) in accordance with the cost principles specified in § 31.22, in the same way as depreciation or use allowances for purchased equipment and buildings. The amount of depreciation or use allowances for donated equipment and buildings is based on the property's market value at the time it was donated.

(f) *Valuation of grantee or subgrantee donated real property for construction/acquisition.* If a grantee or subgrantee donates real property for a construction or facilities acquisition project, the current market value of that property may be counted as cost sharing or matching. If any part of the donated property was acquired with Federal funds, only the non-federal share of the property may be counted as cost sharing or matching.

(g) *Appraisal of real property.* In some cases under paragraphs (d), (e) and (f) of this section, it will be necessary to establish the market value of land or a building or the fair rental rate of land or of space in a building. In these cases, the Federal agency may require the market value or fair rental value be set by an independent appraiser, and that the value or rate be certified by the grantee. This requirement will also be imposed by the grantee on subgrantees.

§ 31.25 Program income.

(a) *General.* Grantees are encouraged to earn income to defray program costs. Program income includes income from fees for services performed, from the use or rental of real or personal property acquired with grant funds, from the sale of commodities or items fabricated under a grant agreement, and from payments of principal and interest on loans made with grant funds. Except as otherwise provided in regulations of the Federal agency, program income does not include interest on grant funds, rebates, credits, discounts, refunds, etc. and interest earned on any of them.

(b) *Definition of program income.* Program income means gross income received by the grantee or subgrantee directly generated by a grant supported activity, or earned only as a result of the grant agreement during the grant period. ''During the grant period'' is the time between the effective date of the award and the ending date of the award reflected in the final financial report.

(c) *Cost of generating program income.* If authorized by Federal regulations or the grant agreement, costs incident to the generation of program income may be deducted from gross income to determine program income.

(d) *Governmental revenues.* Taxes, special assessments, levies, fines, and other such revenues raised by a grantee or subgrantee are not program income unless the revenues are specifically identified in the grant agreement or Federal agency regulations as program income.

(e) *Royalties.* Income from royalties and license fees for copyrighted material, patents, and inventions developed by a grantee or subgrantee is program income only if the revenues are specifically identified in the grant agreement or Federal agency regulations as program income. (See § 31.34.)

(f) *Property.* Proceeds from the sale of real property or equipment will be handled in accordance with the requirements of §§ 31.31 and 31.32.

(g) *Use of program income.* Program income shall be deducted from outlays which may be both Federal and non-Federal as described below, unless the Federal agency regulations or the

grant agreement specify another alternative (or a combination of the alternatives). In specifying alternatives, the Federal agency may distinguish between income earned by the grantee and income earned by subgrantees and between the sources, kinds, or amounts of income. When Federal agencies authorize the alternatives in paragraphs (g) (2) and (3) of this section, program income in excess of any limits stipulated shall also be deducted from outlays.

(1) *Deduction.* Ordinarily program income shall be deducted from total allowable costs to determine the net allowable costs. Program income shall be used for current costs unless the Federal agency authorizes otherwise. Program income which the grantee did not anticipate at the time of the award shall be used to reduce the Federal agency and grantee contributions rather than to increase the funds committed to the project.

(2) *Addition.* When authorized, program income may be added to the funds committed to the grant agreement by the Federal agency and the grantee. The program income shall be used for the purposes and under the conditions of the grant agreement.

(3) *Cost sharing or matching.* When authorized, program income may be used to meet the cost sharing or matching requirement of the grant agreement. The amount of the Federal grant award remains the same.

(h) *Income after the award period.* There are no Federal requirements governing the disposition of program income earned after the end of the award period (i.e., until the ending date of the final financial report, see paragraph (a) of this section), unless the terms of the agreement or the Federal agency regulations provide otherwise.

§31.26 Non-Federal audit.

(a) *Basic rule.* Grantees and subgrantees are responsible for obtaining audits in accordance with the Single Audit Act of 1984 (31 U.S.C. 7501–7) and Federal agency implementing regulations. The audits shall be made by an independent auditor in accordance with generally accepted government auditing standards covering financial and compliance audits.

(b) *Subgrantees.* State or local governments, as those terms are defined for purposes of the Single Audit Act, that receive Federal financial assistance and provide $25,000 or more of it in a fiscal year to a subgrantee shall:

(1) Determine whether State or local subgrantees have met the audit requirements of the Act and whether subgrantees covered by OMB Circular A–110, ''Uniform Requirements for Grants and Other Agreements with Institutions of Higher Education, Hospitals and Other Nonprofit Organizations'' have met the audit requirement. Commercial contractors (private for profit and private and governmental organizations) providing goods and services to State and local governments are not required to have a single audit performed. State and local governments should use their own procedures to ensure that the contractor has complied with laws and regulations affecting the expenditure of Federal funds;

(2) Determine whether the subgrantee spent Federal assistance funds provided in accordance with applicable laws and regulations. This may be accomplished by reviewing an audit of the subgrantee made in accordance with the Act, Circular A–110, or through other means (e.g., program reviews) if the subgrantee has not had such an audit;

(3) Ensure that appropriate corrective action is taken within six months after receipt of the audit report in instance of noncompliance with Federal laws and regulations;

(4) Consider whether subgrantee audits necessitate adjustment of the grantee's own records; and

(5) Require each subgrantee to permit independent auditors to have access to the records and financial statements.

(c) *Auditor selection.* In arranging for audit services, §31.36 shall be followed.

CHANGES, PROPERTY, AND SUBAWARDS

§31.30 Changes.

(a) *General.* Grantees and subgrantees are permitted to rebudget within the approved direct cost budget to meet unanticipated requirements and may make limited program changes to the approved project. However, unless waived by the awarding agency, certain

types of post-award changes in budgets and projects shall require the prior written approval of the awarding agency.

(b) *Relation to cost principles.* The applicable cost principles (see § 31.22) contain requirements for prior approval of certain types of costs. Except where waived, those requirements apply to all grants and subgrants even if paragraphs (c) through (f) of this section do not.

(c) *Budget changes.* (1) *Nonconstruction projects.* Except as stated in other regulations or an award document, grantees or subgrantees shall obtain the prior approval of the awarding agency whenever any of the following changes is anticipated under a nonconstruction award:

(i) Any revision which would result in the need for additional funding.

(ii) Unless waived by the awarding agency, cumulative transfers among direct cost categories, or, if applicable, among separately budgeted programs, projects, functions, or activities which exceed or are expected to exceed ten percent of the current total approved budget, whenever the awarding agency's share exceeds $100,000.

(iii) Transfer of funds allotted for training allowances (i.e., from direct payments to trainees to other expense categories).

(2) *Construction projects.* Grantees and subgrantees shall obtain prior written approval for any budget revision which would result in the need for additional funds.

(3) *Combined construction and nonconstruction projects.* When a grant or subgrant provides funding for both construction and nonconstruction activities, the grantee or subgrantee must obtain prior written approval from the awarding agency before making any fund or budget transfer from nonconstruction to construction or vice versa.

(d) *Programmatic changes.* Grantees or subgrantees must obtain the prior approval of the awarding agency whenever any of the following actions is anticipated:

(1) Any revision of the scope or objectives of the project (regardless of whether there is an associated budget revision requiring prior approval).

(2) Need to extend the period of availability of funds.

(3) Changes in key persons in cases where specified in an application or a grant award. In research projects, a change in the project director or principal investigator shall always require approval unless waived by the awarding agency.

(4) Under nonconstruction projects, contracting out, subgranting (if authorized by law) or otherwise obtaining the services of a third party to perform activities which are central to the purposes of the award. This approval requirement is in addition to the approval requirements of § 31.36 but does not apply to the procurement of equipment, supplies, and general support services.

(e) *Additional prior approval requirements.* The awarding agency may not require prior approval for any budget revision which is not described in paragraph (c) of this section.

(f) *Requesting prior approval.* (1) A request for prior approval of any budget revision will be in the same budget formal the grantee used in its application and shall be accompanied by a narrative justification for the proposed revision.

(2) A request for a prior approval under the applicable Federal cost principles (see § 31.22) may be made by letter.

(3) A request by a subgrantee for prior approval will be addressed in writing to the grantee. The grantee will promptly review such request and shall approve or disapprove the request in writing. A grantee will not approve any budget or project revision which is inconsistent with the purpose or terms and conditions of the Federal grant to the grantee. If the revision, requested by the subgrantee would result in a change to the grantee's approved project which requires Federal prior approval, the grantee will obtain the Federal agency's approval before approving the subgrantee's request.

§ 31.31 Real property.

(a) *Title.* Subject to the obligations and conditions set forth in this section, title to real property acquired under a

grant or subgrant will vest upon acquisition in the grantee or subgrantee respectively.

(b) *Use.* Except as otherwise provided by Federal statutes, real property will be used for the originally authorized purposes as long as needed for that purposes, and the grantee or subgrantee shall not dispose of or encumber its title or other interests.

(c) *Disposition.* When real property is no longer needed for the originally authorized purpose, the grantee or subgrantee will request disposition instructions from the awarding agency. The instructions will provide for one of the following alternatives:

(1) *Retention of title.* Retain title after compensating the awarding agency. The amount paid to the awarding agency will be computed by applying the awarding agency's percentage of participation in the cost of the original purchase to the fair market value of the property. However, in those situations where a grantee or subgrantee is disposing of real property acquired with grant funds and acquiring replacement real property under the same program, the net proceeds from the disposition may be used as an offset to the cost of the replacement property.

(2) *Sale of property.* Sell the property and compensate the awarding agency. The amount due to the awarding agency will be calculated by applying the awarding agency's percentage of participation in the cost of the original purchase to the proceeds of the sale after deduction of any actual and reasonable selling and fixing-up expenses. If the grant is still active, the net proceeds from sale may be offset against the original cost of the property. When a grantee or subgrantee is directed to sell property, sales procedures shall be followed that provide for competition to the extent practicable and result in the highest possible return.

(3) *Transfer of title.* Transfer title to the awarding agency or to a third-party designated/approved by the awarding agency. The grantee or subgrantee shall be paid an amount calculated by applying the grantee or subgrantee's percentage of participation in the purchase of the real property to the current fair market value of the property.

§31.32 Equipment.

(a) *Title.* Subject to the obligations and conditions set forth in this section, title to equipment acquired under a grant or subgrant will vest upon acquisition in the grantee or subgrantee respectively.

(b) *States.* A State will use, manage, and dispose of equipment acquired under a grant by the State in accordance with State laws and procedures. Other grantees and subgrantees will follow paragraphs (c) through (e) of this section.

(c) *Use.* (1) Equipment shall be used by the grantee or subgrantee in the program or project for which it was acquired as long as needed, whether or not the project or program continues to be supported by Federal funds. When no longer needed for the original program or project, the equipment may be used in other activities currently or previously supported by a Federal agency.

(2) The grantee or subgrantee shall also make equipment available for use on other projects or programs currently or previously supported by the Federal Government, providing such use will not interfere with the work on the projects or program for which it was originally acquired. First preference for other use shall be given to other programs or projects supported by the awarding agency. User fees should be considered if appropriate.

(3) Notwithstanding the encouragement in §31.25(a) to earn program income, the grantee or subgrantee must not use equipment acquired with grant funds to provide services for a fee to compete unfairly with private companies that provide equivalent services, unless specifically permitted or contemplated by Federal statute.

(4) When acquiring replacement equipment, the grantee or subgrantee may use the equipment to be replaced as a trade-in or sell the property and use the proceeds to offset the cost of the replacement property, subject to the approval of the awarding agency.

(d) *Management requirements.* Procedures for managing equipment (including replacement equipment), whether acquired in whole or in part with grant funds, until disposition takes place

will, as a minimum, meet the following requirements:

(1) Property records must be maintained that include a description of the property, a serial number or other identification number, the source of property, who holds title, the acquisition date, and cost of the property, percentage of Federal participation in the cost of the property, the location, use and condition of the property, and any ultimate disposition data including the date of disposal and sale price of the property.

(2) A physical inventory of the property must be taken and the results reconciled with the property records at least once every two years.

(3) A control system must be developed to ensure adequate safeguards to prevent loss, damage, or theft of the property. Any loss, damage, or theft shall be investigated.

(4) Adequate maintenance procedures must be developed to keep the property in good condition.

(5) If the grantee or subgrantee is authorized or required to sell the property, proper sales procedures must be established to ensure the highest possible return.

(e) *Disposition*. When original or replacement equipment acquired under a grant or subgrant is no longer needed for the original project or program or for other activities currently or previously supported by a Federal agency, disposition of the equipment will be made as follows:

(1) Items of equipment with a current per-unit fair market value of less than $5,000 may be retained, sold or otherwise disposed of with no further obligation to the awarding agency.

(2) Items of equipment with a current per unit fair market value in excess of $5,000 may be retained or sold and the awarding agency shall have a right to an amount calculated by multiplying the current market value or proceeds from sale by the awarding agency's share of the equipment.

(3) In cases where a grantee or subgrantee fails to take appropriate disposition actions, the awarding agency may direct the grantee or subgrantee to take excess and disposition actions.

(f) *Federal equipment*. In the event a grantee or subgrantee is provided federally-owned equipment:

(1) Title will remain vested in the Federal Government.

(2) Grantees or subgrantees will manage the equipment in accordance with Federal agency rules and procedures, and submit an annual inventory listing.

(3) When the equipment is no longer needed, the grantee or subgrantee will request disposition instructions from the Federal agency.

(g) *Right to transfer title*. The Federal awarding agency may reserve the right to transfer title to the Federal Government or a third party named by the awarding agency when such a third party is otherwise eligible under existing statutes. Such transfers shall be subject to the following standards:

(1) The property shall be identified in the grant or otherwise made known to the grantee in writing.

(2) The Federal awarding agency shall issue disposition instruction within 120 calendar days after the end of the Federal support of the project for which it was acquired. If the Federal awarding agency fails to issue disposition instructions within the 120 calendar-day period the grantee shall follow 31.32(e).

(3) When title to equipment is transferred, the grantee shall be paid an amount calculated by applying the percentage of participation in the purchase to the current fair market value of the property.

§ 31.33 Supplies.

(a) *Title*. Title to supplies acquired under a grant or subgrant will vest, upon acquisition, in the grantee or subgrantee respectively.

(b) *Disposition*. If there is a residual inventory of unused supplies exceeding $5,000 in total aggregate fair market value upon termination or completion of the award, and if the supplies are not needed for any other federally sponsored programs or projects, the grantee or subgrantee shall compensate the awarding agency for its share.

§31.34 Copyrights.

The Federal awarding agency reserves a royalty-free, nonexclusive, and irrevocable license to reproduce, publish or otherwise use, and to authorize others to use, for Federal Government purposes:

(a) The copyright in any work developed under a grant, subgrant, or contract under a grant or subgrant; and

(b) Any rights of copyright to which a grantee, subgrantee or a contractor purchases ownership with grant support.

§31.35 Subawards to debarred and suspended parties.

Grantees and subgrantees must not make any award or permit any award (subgrant or contract) at any tier to any party which is debarred or suspended or is otherwise excluded from or ineligible for participation in Federal assistance programs under Executive Order 12549, ''Debarment and Suspension.''

§31.36 Procurement.

(a) *States.* When procuring property and services under a grant, a State will follow the same policies and procedures it uses for procurements from its non-Federal funds. The State will ensure that every purchase order or other contract includes any clauses required by Federal statutes and executive orders and their implementing regulations. Other grantees and subgrantees will follow paragraphs (b) through (i) in this section.

(b) *Procurement standards.* (1) Grantees and subgrantees will use their own procurement procedures which reflect applicable State and local laws and regulations, provided that the procurements conform to applicable Federal law and the standards identified in this section.

(2) Grantees and subgrantees will maintain a contract administration system which ensures that contractors perform in accordance with the terms, conditions, and specifications of their contracts or purchase orders.

(3) Grantees and subgrantees will maintain a written code of standards of conduct governing the performance of their employees engaged in the award and administration of contracts. No employee, officer or agent of the grantee or subgrantee shall participate in selection, or in the award or administration of a contract supported by Federal funds if a conflict of interest, real or apparent, would be involved. Such a conflict would arise when:

(i) The employee, officer or agent,

(ii) Any member of his immediate family,

(iii) His or her partner, or

(iv) An organization which employs, or is about to employ, any of the above, has a financial or other interest in the firm selected for award. The grantee's or subgrantee's officers, employees or agents will neither solicit nor accept gratuities, favors or anything of monetary value from contractors, potential contractors, or parties to subagreements. Grantee and subgrantees may set minimum rules where the financial interest is not substantial or the gift is an unsolicited item of nominal intrinsic value. To the extent permitted by State or local law or regulations, such standards or conduct will provide for penalties, sanctions, or other disciplinary actions for violations of such standards by the grantee's and subgrantee's officers, employees, or agents, or by contractors or their agents. The awarding agency may in regulation provide additional prohibitions relative to real, apparent, or potential conflicts of interest.

(4) Grantee and subgrantee procedures will provide for a review of proposed procurements to avoid purchase of unnecessary or duplicative items. Consideration should be given to consolidating or breaking out procurements to obtain a more economical purchase. Where appropriate, an analysis will be made of lease versus purchase alternatives, and any other appropriate analysis to determine the most economical approach.

(5) To foster greater economy and efficiency, grantees and subgrantees are encouraged to enter into State and local intergovernmental agreements for procurement or use of common goods and services.

(6) Grantees and subgrantees are encouraged to use Federal excess and surplus property in lieu of purchasing new equipment and property whenever such

use is feasible and reduces project costs.

(7) Grantees and subgrantees are encouraged to use value engineering clauses in contracts for construction projects of sufficient size to offer reasonable opportunities for cost reductions. Value engineering is a systematic and creative anaylsis of each contract item or task to ensure that its essential function is provided at the overall lower cost.

(8) Grantees and subgrantees will make awards only to responsible contractors possessing the ability to perform successfully under the terms and conditions of a proposed procurement. Consideration will be given to such matters as contractor integrity, compliance with public policy, record of past performance, and financial and technical resources.

(9) Grantees and subgrantees will maintain records sufficient to detail the significant history of a procurement. These records will include, but are not necessarily limited to the following: rationale for the method of procurement, selection of contract type, contractor selection or rejection, and the basis for the contract price.

(10) Grantees and subgrantees will use time and material type contracts only—

(i) After a determination that no other contract is suitable, and

(ii) If the contract includes a ceiling price that the contractor exceeds at its own risk.

(11) Grantees and subgrantees alone will be responsible, in accordance with good administrative practice and sound business judgment, for the settlement of all contractual and administrative issues arising out of procurements. These issues include, but are not limited to source evaluation, protests, disputes, and claims. These standards do not relieve the grantee or subgrantee of any contractual responsibilities under its contracts. Federal agencies will not substitute their judgment for that of the grantee or subgrantee unless the matter is primarily a Federal concern. Violations of law will be referred to the local, State, or Federal authority having proper jurisdiction.

(12) Grantees and subgrantees will have protest procedures to handle and resolve disputes relating to their procurements and shall in all instances disclose information regarding the protest to the awarding agency. A protestor must exhaust all administrative remedies with the grantee and subgrantee before pursuing a protest with the Federal agency. Reviews of protests by the Federal agency will be limited to:

(i) Violations of Federal law or regulations and the standards of this section (violations of State or local law will be under the jurisdiction of State or local authorities) and

(ii) Violations of the grantee's or subgrantee's protest procedures for failure to review a complaint or protest. Protests received by the Federal agency other than those specified above will be referred to the grantee or subgrantee.

(c) *Competition*. (1) All procurement transactions will be conducted in a manner providing full and open competition consistent with the standards of § 31.36. Some of the situations considered to be restrictive of competition include but are not limited to:

(i) Placing unreasonable requirements on firms in order for them to qualify to do business,

(ii) Requiring unnecessary experience and excessive bonding,

(iii) Noncompetitive pricing practices between firms or between affiliated companies,

(iv) Noncompetitive awards to consultants that are on retainer contracts,

(v) Organizational conflicts of interest,

(vi) Specifying only a ''brand name'' product instead of allowing ''an equal'' product to be offered and describing the performance of other relevant requirements of the procurement, and

(vii) Any arbitrary action in the procurement process.

(2) Grantees and subgrantees will conduct procurements in a manner that prohibits the use of statutorily or administratively imposed in-State or local geographical preferences in the evaluation of bids or proposals, except in those cases where applicable Federal statutes expressly mandate or encourage geographic preference. Nothing in this section preempts State licensing laws. When contracting for architectural and engineering (A/E) services,

geographic location may be a selection criteria provided its application leaves an appropriate number of qualified firms, given the nature and size of the project, to compete for the contract.

(3) Grantees will have written selection procedures for procurement transactions. These procedures will ensure that all solicitations:

(i) Incorporate a clear and accurate description of the technical requirements for the material, product, or service to be procured. Such description shall not, in competitive procurements, contain features which unduly restrict competition. The description may include a statement of the qualitative nature of the material, product or service to be procured, and when necessary, shall set forth those minimum essential characteristics and standards to which it must conform if it is to satisfy its intended use. Detailed product specifications should be avoided if at all possible. When it is impractical or uneconomical to make a clear and accurate description of the technical requirements, a ''brand name or equal'' description may be used as a means to define the performance or other salient requirements of a procurement. The specific features of the named brand which must be met by offerors shall be clearly stated; and

(ii) Identify all requirements which the offerors must fulfill and all other factors to be used in evaluating bids or proposals.

(4) Grantees and subgrantees will ensure that all prequalified lists of persons, firms, or products which are used in acquiring goods and services are current and include enough qualified sources to ensure maximum open and free competition. Also, grantees and subgrantees will not preclude potential bidders from qualifying during the solicitation period.

(5) Construction grants awarded under Title II of the Clean Water Act are subject to the following ''Buy American'' requirements in paragraphs (c)(5)(i)–(iii) of this section. Section 215 of the Clean Water Act requires that contractors give preference to the use of domestic material in the construction of EPA-funded treatment works.

(i) Contractors must use domestic construction materials in preference to nondomestic material if it is priced no more than 6 percent higher than the bid or offered price of the nondomestic material, including all costs of delivery to the construction site and any applicable duty, whether or not assessed. The grantee will normally base the computations on prices and costs in effect on the date of opening bids or proposals.

(ii) The award official may waive the Buy American provision based on factors the award official considers relevant, including:

(A) Such use is not in the public interest;

(B) The cost is unreasonable;

(C) The Agency's available resources are not sufficient to implement the provision, subject to the Deputy Administrator's concurrence;

(D) The articles, materials or supplies of the class or kind to be used or the articles, materials or supplies from which they are manufactured are not mined, produced or manufactured in the United States in sufficient and reasonably available commerical quantities or satisfactory quality for the particular project; or

(E) Application of this provision is contrary to multilateral government procurement agreements, subject to the Deputy Administrator's concurrence.

(iii) All bidding documents, subagreements, and, if appropriate, requests for proposals must contain the following ''Buy American'' provision: In accordance with section 215 of the Clean Water Act (33 U.S.C. 1251 et seq.) and implementing EPA regulations, the contractor agrees that preference will be given to domestic construction materials by the contractor, subcontractors, materialmen and suppliers in the performance of this subagreement.

(d) *Methods of procurement to be followed*—(1) *Procurement by small purchase procedures.* Small purchase procedures are those relatively simple and informal procurement methods for securing services, supplies, or other property that do not cost more than the simplified acquisition threshold fixed at 41 U.S.C. 403(11) (currently set at $100,000). If small purchase procedures are used,

price or rate quotations shall be obtained from an adequate number of qualified sources.

(2) Procurement by *sealed bids* (formal advertising). Bids are publicly solicited and a firm-fixed-price contract (lump sum or unit price) is awarded to the responsible bidder whose bid, conforming with all the material terms and conditions of the invitation for bids, is the lowest in price. The sealed bid method is the preferred method for procuring construction, if the conditions in 31.36(d)(2)(i) apply.

(i) In order for sealed bidding to be feasible, the following conditions should be present:

(A) A complete, adequate, and realistic specification or purchase description is available;

(B) Two or more responsible bidders are willing and able to compete effectively and for the business; and

(C) The procurement lends itself to a firm fixed price contract and the selection of the successful bidder can be made principally on the basis of price.

(ii) If sealed bids are used, the following requirements apply:

(A) The invitation for bids will be publicly advertised and bids shall be solicited from an adequate number of known suppliers, providing them sufficient time prior to the date set for opening the bids;

(B) The invitation for bids, which will include any specifications and pertinent attachments, shall define the items or services in order for the bidder to properly respond;

(C) All bids will be publicly opened at the time and place prescribed in the invitation for bids;

(D) A firm fixed-price contract award will be made in writing to the lowest responsive and responsible bidder. Where specified in bidding documents, factors such as discounts, transportation cost, and life cycle costs shall be considered in determining which bid is lowest. Payment discounts will only be used to determine the low bid when prior experience indicates that such discounts are usually taken advantage of; and

(E) Any or all bids may be rejected if there is a sound documented reason.

(3) Procurement by *competitive proposals.* The technique of competitive proposals is normally conducted with more than one source submitting an offer, and either a fixed-price or cost-reimbursement type contract is awarded. It is generally used when conditions are not appropriate for the use of sealed bids. If this method is used, the following requirements apply:

(i) Requests for proposals will be publicized and identify all evaluation factors and their relative importance. Any response to publicized requests for proposals shall be honored to the maximum extent practical;

(ii) Proposals will be solicited from an adequate number of qualified sources;

(iii) Grantees and subgrantees will have a method for conducting technical evaluations of the proposals received and for selecting awardees;

(iv) Awards will be made to the responsible firm whose proposal is most advantageous to the program, with price and other factors considered; and

(v) Grantees and subgrantees may use competitive proposal procedures for qualifications-based procurement of architectural/engineering (A/E) professional services whereby competitors' qualifications are evaluated and the most qualified competitor is selected, subject to negotiation of fair and reasonable compensation. The method, where price is not used as a selection factor, can only be used in procurement of A/E professional services. It cannot be used to purchase other types of services though A/E firms are a potential source to perform the proposed effort.

(4) Procurement by *noncompetitive proposals* is procurement through solicitation of a proposal from only one source, or after solicitation of a number of sources, competition is determined inadequate.

(i) Procurement by noncompetitive proposals may be used only when the award of a contract is infeasible under small purchase procedures, sealed bids or competitive proposals and one of the following circumstances applies:

(A) The item is available only from a single source;

(B) The public exigency or emergency for the requirement will not permit a delay resulting from competitive solicitation;

(C) The awarding agency authorizes noncompetitive proposals; or

(D) After solicitation of a number of sources, competition is determined inadequate.

(ii) Cost analysis, i.e., verifying the proposed cost data, the projections of the data, and the evaluation of the specific elements of costs and profits, is required.

(iii) Grantees and subgrantees may be required to submit the proposed procurement to the awarding agency for pre-award review in accordance with paragraph (g) of this section.

(e) *Contracting with small and minority firms, women's business enterprise and labor surplus area firms.* (1) The grantee and subgrantee will take all necessary affirmative steps to assure that minority firms, women's business enterprises, and labor surplus area firms are used when possible.

(2) Affirmative steps shall include:

(i) Placing qualified small and minority businesses and women's business enterprises on solicitation lists;

(ii) Assuring that small and minority businesses, and women's business enterprises are solicited whenever they are potential sources;

(iii) Dividing total requirements, when economically feasible, into smaller tasks or quantities to permit maximum participation by small and minority business, and women's business enterprises;

(iv) Establishing delivery schedules, where the requirement permits, which encourage participation by small and minority business, and women's business enterprises;

(v) Using the services and assistance of the Small Business Administration, and the Minority Business Development Agency of the Department of Commerce; and

(vi) Requiring the prime contractor, if subcontracts are to be let, to take the affirmative steps listed in paragraphs (e)(2) (i) through (v) of this section.

(f) *Contract cost and price.* (1) Grantees and subgrantees must perform a cost or price analysis in connection with every procurement action including contract modifications. The method and degree of analysis is dependent on the facts surrounding the particular procurement situation, but as a starting point, grantees must make independent estimates before receiving bids or proposals. A cost analysis must be performed when the offeror is required to submit the elements of his estimated cost, e.g., under professional, consulting, and architectural engineering services contracts. A cost analysis will be necessary when adequate price competition is lacking, and for sole source procurements, including contract modifications or change orders, unless price resonableness can be established on the basis of a catalog or market price of a commercial product sold in substantial quantities to the general public or based on prices set by law or regulation. A price analysis will be used in all other instances to determine the reasonableness of the proposed contract price.

(2) Grantees and subgrantees will negotiate profit as a separate element of the price for each contract in which there is no price competition and in all cases where cost analysis is performed. To establish a fair and reasonable profit, consideration will be given to the complexity of the work to be performed, the risk borne by the contractor, the contractor's investment, the amount of subcontracting, the quality of its record of past performance, and industry profit rates in the surrounding geographical area for similar work.

(3) Costs or prices based on estimated costs for contracts under grants will be allowable only to the extent that costs incurred or cost estimates included in negotiated prices are consistent with Federal cost principles (see § 31.22). Grantees may reference their own cost principles that comply with the applicable Federal cost principles.

(4) The cost plus a percentage of cost and percentage of construction cost methods of contracting shall not be used.

(g) *Awarding agency review.* (1) Grantees and subgrantees must make available, upon request of the awarding agency, technical specifications on proposed procurements where the awarding agency believes such review is needed to ensure that the item and/or service specified is the one being proposed for purchase. This review generally will take place prior to the time

the specification is incorporated into a solicitation document. However, if the grantee or subgrantee desires to have the review accomplished after a solicitation has been developed, the awarding agency may still review the specifications, with such review usually limited to the technical aspects of the proposed purchase.

(2) Grantees and subgrantees must on request make available for awarding agency pre-award review procurement documents, such as requests for proposals or invitations for bids, independent cost estimates, etc. when:

(i) A grantee's or subgrantee's procurement procedures or operation fails to comply with the procurement standards in this section; or

(ii) The procurement is expected to exceed the simplified acquisition threshold and is to be awarded without competition or only one bid or offer is received in response to a solicitation; or

(iii) The procurement, which is expected to exceed the simplified acquisition threshold, specifies a ''brand name'' product; or

(iv) The proposed award is more than the simplified acquisition threshold and is to be awarded to other than the apparent low bidder under a sealed bid procurement; or

(v) A proposed contract modification changes the scope of a contract or increases the contract amount by more than the simplified acquisition threshold.

(3) A grantee or subgrantee will be exempt from the pre-award review in paragraph (g)(2) of this section if the awarding agency determines that its procurement systems comply with the standards of this section.

(i) A grantee or subgrantee may request that its procurement system be reviewed by the awarding agency to determine whether its system meets these standards in order for its system to be certified. Generally, these reviews shall occur where there is a continuous high-dollar funding, and third-party contracts are awarded on a regular basis.

(ii) A grantee or subgrantee may self-certify its procurement system. Such self-certification shall not limit the awarding agency's right to survey the system. Under a self-certification procedure, awarding agencies may wish to rely on written assurances from the grantee or subgrantee that it is complying with these standards. A grantee or subgrantee will cite specific procedures, regulations, standards, etc., as being in compliance with these requirements and have its system available for review.

(h) *Bonding requirements.* For construction or facility improvement contracts or subcontracts exceeding the simplified acquisition threshold, the awarding agency may accept the bonding policy and requirements of the grantee or subgrantee provided the awarding agency has made a determination that the awarding agency's interest is adequately protected. If such a determination has not been made, the minimum requirements shall be as follows:

(1) *A bid guarantee from each bidder equivalent to five percent of the bid price.* The ''bid guarantee'' shall consist of a firm commitment such as a bid bond, certified check, or other negotiable instrument accompanying a bid as assurance that the bidder will, upon acceptance of his bid, execute such contractual documents as may be required within the time specified.

(2) *A performance bond on the part of the contractor for 100 percent of the contract price.* A ''performance bond'' is one executed in connection with a contract to secure fulfillment of all the contractor's obligations under such contract.

(3) *A payment bond on the part of the contractor for 100 percent of the contract price.* A ''payment bond'' is one executed in connection with a contract to assure payment as required by law of all persons supplying labor and material in the execution of the work provided for in the contract.

(i) *Contract provisions.* A grantee's and subgrantee's contracts must contain provisions in paragraph (i) of this section. Federal agencies are permitted to require changes, remedies, changed conditions, access and records retention, suspension of work, and other clauses approved by the Office of Federal Procurement Policy.

(1) Administrative, contractual, or legal remedies in instances where contractors violate or breach contract terms, and provide for such sanctions and penalties as may be appropriate. (Contracts more than the simplified acquisition threshold)

(2) Termination for cause and for convenience by the grantee or subgrantee including the manner by which it will be effected and the basis for settlement. (All contracts in excess of $10,000)

(3) Compliance with Executive Order 11246 of September 24, 1965, entitled ''Equal Employment Opportunity,'' as amended by Executive Order 11375 of October 13, 1967, and as supplemented in Department of Labor regulations (41 CFR chapter 60). (All construction contracts awarded in excess of $10,000 by grantees and their contractors or subgrantees)

(4) Compliance with the Copeland ''Anti-Kickback'' Act (18 U.S.C. 874) as supplemented in Department of Labor regulations (29 CFR Part 3). (All contracts and subgrants for construction or repair)

(5) Compliance with the Davis-Bacon Act (40 U.S.C. 276a to 276a–7) as supplemented by Department of Labor regulations (29 CFR Part 5). (Construction contracts in excess of $2000 awarded by grantees and subgrantees when required by Federal grant program legislation)

(6) Compliance with Sections 103 and 107 of the Contract Work Hours and Safety Standards Act (40 U.S.C. 327–330) as supplemented by Department of Labor regulations (29 CFR Part 5). (Construction contracts awarded by grantees and subgrantees in excess of $2000, and in excess of $2500 for other contracts which involve the employment of mechanics or laborers)

(7) Notice of awarding agency requirements and regulations pertaining to reporting.

(8) Notice of awarding agency requirements and regulations pertaining to patent rights with respect to any discovery or invention which arises or is developed in the course of or under such contract.

(9) Awarding agency requirements and regulations pertaining to copyrights and rights in data.

(10) Access by the grantee, the subgrantee, the Federal grantor agency, the Comptroller General of the United States, or any of their duly authorized representatives to any books, documents, papers, and records of the contractor which are directly pertinent to that specific contract for the purpose of making audit, examination, excerpts, and transcriptions.

(11) Retention of all required records for three years after grantees or subgrantees make final payments and all other pending matters are closed.

(12) Compliance with all applicable standards, orders, or requirements issued under section 306 of the Clean Air Act (42 U.S.C. 1857(h)), section 508 of the Clean Water Act (33 U.S.C. 1368), Executive Order 11738, and Environmental Protection Agency regulations (40 CFR part 15). (Contracts, subcontracts, and subgrants of amounts in excess of $100,000)

(13) Mandatory standards and policies relating to energy efficiency which are contained in the state energy conservation plan issued in compliance with the Energy Policy and Conservation Act (Pub. L. 94–163, 89 Stat. 871).

(j) *Payment to consultants.* (1) EPA will limit its participation in the salary rate (excluding overhead) paid to individual consultants retained by grantees or by a grantee's contractors or subcontractors to the maximum daily rate for a GS–18. (Grantees may, however, pay consultants more than this amount). This limitation applies to consultation services of designated individuals with specialized skills who are paid at a daily or hourly rate. This rate does not include transportation and subsistence costs for travel performed; grantees will pay these in accordance with their normal travel reimbursement practices. (Pub. L. 99–591).

(2) Subagreements with firms for services which are awarded using the procurement requirements in this part are not affected by this limitation.

(k) *Use of the same architect or engineer during construction.* (1) If the grantee is satisfied with the qualifications and performance of the architect or engineer who provided any or all of the facilities planning or design services for a waste-water treatment works

project and wishes to retain that firm or individual during construction of the project, it may do so without further public notice and evaluation of qualifications, provided:

(i) The grantee received a facilities planning (Step 1) or design grant (Step 2), and selected the architect or engineer in accordance with EPA's procurement regulations in effect when EPA awarded the grant; or

(ii) The award official approves noncompetitive procurement under § 31.36(d)(4) for reasons other than simply using the same individual or firm that provided facilities planning or design services for the project; or

(iii) The grantee attests that:

(A) The initial request for proposals clearly stated the possibility that the firm or individual selected could be awarded a subagreement for services during construction; and

(B) The firm or individual was selected for facilities planning or design services in accordance with procedures specified in this section.

(C) No employee, officer or agent of the grantee, any member of their immediate families, or their partners have financial or other interest in the firm selected for award; and

(D) None of the grantee's officers, employees or agents solicited or accepted gratuities, favors or anything of monetary value from contractors or other parties to subagreements.

(2) However, if the grantee uses the procedures in paragraph (k)(1) of this section to retain an architect or engineer, any Step 3 subagreements between the architect or engineer and the grantee must meet all of the other procurement provisions in § 31.36.

[53 FR 8068 and 8087, Mar. 11, 1988, and amended at 53 FR 8075, Mar. 11, 1988; 60 FR 19639, 19644, Apr. 19, 1995]

§ 31.37 Subgrants.

(a) *States.* States shall follow state law and procedures when awarding and administering subgrants (whether on a cost reimbursement or fixed amount basis) of financial assistance to local and Indian tribal governments. States shall:

(1) Ensure that every subgrant includes any clauses required by Federal statute and executive orders and their implementing regulations;

(2) Ensure that subgrantees are aware of requirements imposed upon them by Federal statute and regulation;

(3) Ensure that a provision for compliance with § 31.42 is placed in every cost reimbursement subgrant; and

(4) Conform any advances of grant funds to subgrantees substantially to the same standards of timing and amount that apply to cash advances by Federal agencies.

(b) *All other grantees.* All other grantees shall follow the provisions of this part which are applicable to awarding agencies when awarding and administering subgrants (whether on a cost reimbursement or fixed amount basis) of financial assistance to local and Indian tribal governments. Grantees shall:

(1) Ensure that every subgrant includes a provision for compliance with this part;

(2) Ensure that every subgrant includes any clauses required by Federal statute and executive orders and their implementing regulations; and

(3) Ensure that subgrantees are aware of requirements imposed upon them by Federal statutes and regulations.

(c) *Exceptions.* By their own terms, certain provisions of this part do not apply to the award and administration of subgrants:

(1) Section 31.10;

(2) Section 31.11;

(3) The letter-of-credit procedures specified in Treasury Regulations at 31 CFR part 205, cited in § 31.21; and

(4) Section 31.50.

REPORTS, RECORDS, RETENTION, AND ENFORCEMENT

§ 31.40 Monitoring and reporting program performance.

(a) *Monitoring by grantees.* Grantees are responsible for managing the day-to-day operations of grant and subgrant supported activities. Grantees must monitor grant and subgrant supported activities to assure compliance with applicable Federal requirements and that performance goals are being achieved. Grantee monitoring must

cover each program, function or activity.

(b) *Nonconstruction performance reports.* The Federal agency may, if it decides that performance information available from subsequent applications contains sufficient information to meet its programmatic needs, require the grantee to submit a performance report only upon expiration or termination of grant support. Unless waived by the Federal agency this report will be due on the same date as the final Financial Status Report.

(1) Grantees shall submit annual performance reports unless the awarding agency requires quarterly or semi-annual reports. However, performance reports will not be required more frequently than quarterly. Annual reports shall be due 90 days after the grant year, quarterly or semi-annual reports shall be due 30 days after the reporting period. The final performance report will be due 90 days after the expiration or termination of grant support. If a justified request is submitted by a grantee, the Federal agency may extend the due date for any performance report. Additionally, requirements for unnecessary performance reports may be waived by the Federal agency.

(2) Performance reports will contain, for each grant, brief information on the following:

(i) A comparison of actual accomplishments to the objectives established for the period. Where the output of the project can be quantified, a computation of the cost per unit of output may be required if that information will be useful.

(ii) The reasons for slippage if established objectives were not met.

(iii) Additional pertinent information including, when appropriate, analysis and explanation of cost overruns or high unit costs.

(3) Grantees will not be required to submit more than the original and two copies of performance reports.

(4) Grantees will adhere to the standards in this section in prescribing performance reporting requirements for subgrantees.

(c) *Construction performance reports.* For the most part, on-site technical inspections and certified percentage-of-completion data are relied on heavily by Federal agencies to monitor progress under construction grants and subgrants. The Federal agency will require additional formal performance reports only when considered necessary, and never more frequently than quarterly.

(d) *Significant developments.* Events may occur between the scheduled performance reporting dates which have significant impact upon the grant or subgrant supported activity. In such cases, the grantee must inform the Federal agency as soon as the following types of conditions become known:

(1) Problems, delays, or adverse conditions which will materially impair the ability to meet the objective of the award. This disclosure must include a statement of the action taken, or contemplated, and any assistance needed to resolve the situation.

(2) Favorable developments which enable meeting time schedules and objectives sooner or at less cost than anticipated or producing more beneficial results than originally planned.

(e) Federal agencies may make site visits as warranted by program needs.

(f) *Waivers, extensions.* (1) Federal agencies may waive any performance report required by this part if not needed.

(2) The grantee may waive any performance report from a subgrantee when not needed. The grantee may extend the due date for any performance report from a subgrantee if the grantee will still be able to meet its performance reporting obligations to the Federal agency.

§31.41 Financial Reporting.

(a) *General.* (1) Except as provided in paragraphs (a) (2) and (5) of this section, grantees will use only the forms specified in paragraphs (a) through (e) of this section, and such supplementary or other forms as may from time to time be authorized by OMB, for:

(i) Submitting financial reports to Federal agencies, or

(ii) Requesting advances or reimbursements when letters of credit are not used.

(2) Grantees need not apply the forms prescribed in this section in dealing with their subgrantees. However,

grantees shall not impose more burdensome requirements on subgrantees.

(3) Grantees shall follow all applicable standard and supplemental Federal agency instructions approved by OMB to the extent required under the Paperwork Reduction Act of 1980 for use in connection with forms specified in paragraphs (b) through (e) of this section. Federal agencies may issue substantive supplementary instructions only with the approval of OMB. Federal agencies may shade out or instruct the grantee to disregard any line item that the Federal agency finds unnecessary for its decisionmaking purposes.

(4) Grantees will not be required to submit more than the original and two copies of forms required under this part.

(5) Federal agencies may provide computer outputs to grantees to expedite or contribute to the accuracy of reporting. Federal agencies may accept the required information from grantees in machine usable format or computer printouts instead of prescribed forms.

(6) Federal agencies may waive any report required by this section if not needed.

(7) Federal agencies may extend the due date of any financial report upon receiving a justified request from a grantee.

(b) *Financial Status Report*—(1) *Form.* Grantees will use Standard Form 269 or 269A, Financial Status Report, to report the status of funds for all nonconstruction grants and for construction grants when required in accordance with § 31.41(e)(2)(iii).

(2) *Accounting basis.* Each grantee will report program outlays and program income on a cash or accrual basis as prescribed by the awarding agency. If the Federal agency requires accrual information and the grantee's accounting records are not normally kept on the accrual basis, the grantee shall not be required to convert its accounting system but shall develop such accrual information through and analysis of the documentation on hand.

(3) *Frequency.* The Federal agency may prescribe the frequency of the report for each project or program. However, the report will not be required more frequently than quarterly. If the Federal agency does not specify the frequency of the report, it will be submitted annually. A final report will be required upon expiration or termination of grant support.

(4) *Due date.* When reports are required on a quarterly or semiannual basis, they will be due 30 days after the reporting period. When required on an annual basis, they will be due 90 days after the grant year. Final reports will be due 90 days after the expiration or termination of grant support.

(c) *Federal Cash Transactions Report*—(1) *Form.* (i) For grants paid by letter or credit, Treasury check advances or electronic transfer of funds, the grantee will submit the Standard Form 272, Federal Cash Transactions Report, and when necessary, its continuation sheet, Standard Form 272a, unless the terms of the award exempt the grantee from this requirement.

(ii) These reports will be used by the Federal agency to monitor cash advanced to grantees and to obtain disbursement or outlay information for each grant from grantees. The format of the report may be adapted as appropriate when reporting is to be accomplished with the assistance of automatic data processing equipment provided that the information to be submitted is not changed in substance.

(2) *Forecasts of Federal cash requirements.* Forecasts of Federal cash requirements may be required in the ''Remarks'' section of the report.

(3) *Cash in hands of subgrantees.* When considered necessary and feasible by the Federal agency, grantees may be required to report the amount of cash advances in excess of three days' needs in the hands of their subgrantees or contractors and to provide short narrative explanations of actions taken by the grantee to reduce the excess balances.

(4) *Frequency and due date.* Grantees must submit the report no later than 15 working days following the end of each quarter. However, where an advance either by letter of credit or electronic transfer of funds is authorized at an annualized rate of one million dollars or more, the Federal agency may require the report to be submitted within 15 working days following the end of each month.

(d) *Request for advance or reimbursement*—(1) *Advance payments.* Requests for Treasury check advance payments will be submitted on Standard Form 270, Request for Advance or Reimbursement. (This form will not be used for drawdowns under a letter of credit, electronic funds transfer or when Treasury check advance payments are made to the grantee automatically on a predetermined basis.)

(2) *Reimbursements.* Requests for reimbursement under nonconstruction grants will also be submitted on Standard Form 270. (For reimbursement requests under construction grants, see paragraph (e)(1) of this section.)

(3) The frequency for submitting payment requests is treated in §31.41(b)(3).

(e) *Outlay report and request for reimbursement for construction programs.* (1) Grants that support construction activities paid by reimbursement method.

(i) Requests for reimbursement under construction grants will be submitted on Standard Form 271, Outlay Report and Request for Reimbursement for Construction Programs. Federal agencies may, however, prescribe the Request for Advance or Reimbursement form, specified in §31.41(d), instead of this form.

(ii) The frequency for submitting reimbursement requests is treated in §31.41(b)(3).

(2) *Grants that support construction activities paid by letter of credit, electronic funds transfer or Treasury check advance.* (i) When a construction grant is paid by letter of credit, electronic funds transfer or Treasury check advances, the grantee will report its outlays to the Federal agency using Standard Form 271, Outlay Report and Request for Reimbursement for Construction Programs. The Federal agency will provide any necessary special instruction. However, frequency and due date shall be governed by §31.41(b)(3) and (4).

(ii) When a construction grant is paid by Treasury check advances based on periodic requests from the grantee, the advances will be requested on the form specified in §31.41(d).

(iii) The Federal agency may substitute the Financial Status Report specified in §31.41(b) for the Outlay Report and Request for Reimbursement for Construction Programs.

(3) *Accounting basis.* The accounting basis for the Outlay Report and Request for Reimbursement for Construction Programs shall be governed by §31.41(b)(2).

§31.42 Retention and access requirements for records.

(a) *Applicability.* (1) This section applies to all financial and programmatic records, supporting documents, statistical records, and other records of grantees or subgrantees which are:

(i) Required to be maintained by the terms of this part, program regulations or the grant agreement, or

(ii) Otherwise reasonably considered as pertinent to program regulations or the grant agreement.

(2) This section does not apply to records maintained by contractors or subcontractors. For a requirement to place a provision concerning records in certain kinds of contracts, see §31.36(i)(10).

(b) *Length of retention period.* (1) Except as otherwise provided, records must be retained for three years from the starting date specified in paragraph (c) of this section.

(2) If any litigation, claim, negotiation, audit or other action involving the records has been started before the expiration of the 3-year period, the records must be retained until completion of the action and resolution of all issues which arise from it, or until the end of the regular 3-year period, whichever is later.

(3) To avoid duplicate recordkeeping, awarding agencies may make special arrangements with grantees and subgrantees to retain any records which are continuously needed for joint use. The awarding agency will request transfer of records to its custody when it determines that the records possess long-term retention value. When the records are transferred to or maintained by the Federal agency, the 3-year retention requirement is not applicable to the grantee or subgrantee.

(c) *Starting date of retention period*—(1) *General.* When grant support is continued or renewed at annual or other intervals, the retention period for the records of each funding period starts on

the day the grantee or subgrantee submits to the awarding agency its single or last expenditure report for that period. However, if grant support is continued or renewed quarterly, the retention period for each year's records starts on the day the grantee submits its expenditure report for the last quarter of the Federal fiscal year. In all other cases, the retention period starts on the day the grantee submits its final expenditure report. If an expenditure report has been waived, the retention period starts on the day the report would have been due.

(2) *Real property and equipment records.* The retention period for real property and equipment records starts from the date of the disposition or replacement or transfer at the direction of the awarding agency.

(3) *Records for income transactions after grant or subgrant support.* In some cases grantees must report income after the period of grant support. Where there is such a requirement, the retention period for the records pertaining to the earning of the income starts from the end of the grantee's fiscal year in which the income is earned.

(4) *Indirect cost rate proposals, cost allocations plans, etc.* This paragraph applies to the following types of documents, and their supporting records: indirect cost rate computations or proposals, cost allocation plans, and any similar accounting computations of the rate at which a particular group of costs is chargeable (such as computer usage chargeback rates or composite fringe benefit rates).

(i) *If submitted for negotiation.* If the proposal, plan, or other computation is required to be submitted to the Federal Government (or to the grantee) to form the basis for negotiation of the rate, then the 3-year retention period for its supporting records starts from the date of such submission.

(ii) *If not submitted for negotiation.* If the proposal, plan, or other computation is not required to be submitted to the Federal Government (or to the grantee) for negotiation purposes, then the 3-year retention period for the proposal plan, or computation and its supporting records starts from end of the fiscal year (or other accounting period) covered by the proposal, plan, or other computation.

(d) *Substitution of microfilm.* Copies made by microfilming, photocopying, or similar methods may be substituted for the original records.

(e) *Access to records*—(1) *Records of grantees and subgrantees.* The awarding agency and the Comptroller General of the United States, or any of their authorized representatives, shall have the right of access to any pertinent books, documents, papers, or other records of grantees and subgrantees which are pertinent to the grant, in order to make audits, examinations, excerpts, and transcripts.

(2) *Expiration of right of access.* The rights of access in this section must not be limited to the required retention period but shall last as long as the records are retained.

(f) *Restrictions on public access.* The Federal Freedom of Information Act (5 U.S.C. 552) does not apply to records Unless required by Federal, State, or local law, grantees and subgrantees are not required to permit public access to their records.

§ 31.43 Enforcement.

(a) *Remedies for noncompliance.* If a grantee or subgrantee materially fails to comply with any term of an award, whether stated in a Federal statute or regulation, an assurance, in a State plan or application, a notice of award, or elsewhere, the awarding agency may take one or more of the following actions, as appropriate in the circumstances:

(1) Temporarily withhold cash payments pending correction of the deficiency by the grantee or subgrantee or more severe enforcement action by the awarding agency,

(2) Disallow (that is, deny both use of funds and matching credit for) all or part of the cost of the activity or action not in compliance,

(3) Wholly or partly suspend or terminate the current award for the grantee's or subgrantee's program,

(i) EPA can also wholly or partly annul the current award for the grantee's or subgrantee's program,

(ii) [Reserved]

(4) Withhold further awards for the program, or

(5) Take other remedies that may be legally available.

(b) *Hearings, appeals.* In taking an enforcement action, the awarding agency will provide the grantee or subgrantee an opportunity for such hearing, appeal, or other administrative proceeding to which the grantee or subgrantee is entitled under any statute or regulation applicable to the action involved.

(c) *Effects of suspension and termination.* Costs of grantee or subgrantee resulting from obligations incurred by the grantee or subgrantee during a suspension or after termination of an award are not allowable unless the awarding agency expressly authorizes them in the notice of suspension or termination or subsequently. Other grantee or subgrantee costs during suspension or after termination which are necessary and not reasonably avoidable are allowable if:

(1) The costs result from obligations which were properly incurred by the grantee or subgrantee before the effective date of suspension or termination, are not in anticipation of it, and, in the case of a termination, are noncancellable, and,

(2) The costs would be allowable if the award were not suspended or expired normally at the end of the funding period in which the termination takes effect.

(d) *Relationship to Debarment and Suspension.* The enforcement remedies identified in this section, including suspension and termination, do not preclude grantee or subgrantee from being subject to ''Debarment and Suspension'' under E.O. 12549 (see §31.35).

[53 FR 8068 and 8087, Mar. 11, 1988, and amended at 53 FR 8076, Mar. 11, 1988]

§31.44 Termination for convenience.

Except as provided in §31.43 awards may be terminated in whole or in part only as follows:

(a) By the awarding agency with the consent of the grantee or subgrantee in which case the two parties shall agree upon the termination conditions, including the effective date and in the case of partial termination, the portion to be terminated, or

(b) By the grantee or subgrantee upon written notification to the awarding agency, setting forth the reasons for such termination, the effective date, and in the case of partial termination, the portion to be terminated. However, if, in the case of a partial termination, the awarding agency determines that the remaining portion of the award will not accomplish the purposes for which the award was made, the awarding agency may terminate the award in its entirety under either §31.43 or paragraph (a) of this section.

§31.45 Quality assurance.

If the grantee's project involves environmentally related measurements or data generation, the grantee shall develop and implement quality assurance practices consisting of policies, procedures, specifications, standards, and documentation sufficient to produce data of quality adequate to meet project objectives and to minimize loss of data due to out-of-control conditions or malfunctions.

[53 FR 8076, Mar. 11, 1988]

Subpart D—After-The-Grant Requirements

§31.50 Closeout.

(a) *General.* The Federal agency will close out the award when it determines that all applicable administrative actions and all required work of the grant has been completed.

(b) *Reports.* Within 90 days after the expiration or termination of the grant, the grantee must submit all financial, performance, and other reports required as a condition of the grant. Upon request by the grantee, Federal agencies may extend this timeframe. These may include but are not limited to:

(1) *Final performance or progress report.*

(2) *Financial Status Report (SF 269) or Outlay Report and Request for Reimbursement for Construction Programs (SF–271) (as applicable.)*

(3) *Final request for payment (SF–270) (if applicable).*

(4) *Invention disclosure (if applicable).*

(5) *Federally-owned property report:* In accordance with §31.32(f), a grantee must submit an inventory of all federally owned property (as distinct from property acquired with grant funds) for

which it is accountable and request disposition instructions from the Federal agency of property no longer needed.

(c) *Cost adjustment.* The Federal agency will, within 90 days after receipt of reports in paragraph (b) of this section, make upward or downward adjustments to the allowable costs.

(d) *Cash adjustments.* (1) The Federal agency will make prompt payment to the grantee for allowable reimbursable costs.

(2) The grantee must immediately refund to the Federal agency any balance of unobligated (unencumbered) cash advanced that is not authorized to be retained for use on other grants.

§ 31.51 Later disallowances and adjustments.

The closeout of a grant does not affect:

(a) The Federal agency's right to disallow costs and recover funds on the basis of a later audit or other review;

(b) The grantee's obligation to return any funds due as a result of later refunds, corrections, or other transactions;

(c) Records retention as required in § 31.42;

(d) Property management requirements in §§ 31.31 and 31.32; and

(e) Audit requirements in § 31.26.

§ 31.52 Collection of amounts due.

(a) Any funds paid to a grantee in excess of the amount to which the grantee is finally determined to be entitled under the terms of the award constitute a debt to the Federal Government. If not paid within a reasonable period after demand, the Federal agency may reduce the debt by:

(1) Making an adminstrative offset against other requests for reimbursements,

(2) Withholding advance payments otherwise due to the grantee, or

(3) Other action permitted by law.

(b) Except where otherwise provided by statutes or regulations, the Federal agency will charge interest on an overdue debt in accordance with the Federal Claims Collection Standards (4 CFR Ch. II). The date from which interest is computed is not extended by litigation or the filing of any form of appeal.

Subpart E—Entitlement [Reserved]

Subpart F—Disputes

§ 31.70 Disputes.

(a) Disagreements should be resolved at the lowest level possible.

(b) If an agreement cannot be reached, the EPA disputes decision official will provide a written final decision. The EPA disputes decision official is the individual designated by the award official to resolve disputes concerning assistance agreements.

(c) The disputes decision official's decision will constitute final agency action unless a request for review is filed by registered mail, return receipt requested, within 30 calendar days of the date of the decision.

(1) For final decisions issued by an EPA disputes decision official at Headquarters, the request for review shall be filed with the Assistant Administrator responsible for the assistance program.

(2) For final decisions issued by a Regional disputes decision official, the request for review shall be filed with the Regional Administrator. If the Regional Administrator issued the final decision, the request for reconsideration shall be filed with the Regional Administrator.

(d) The request shall include:

(1) A copy of the EPA disputes decision official's final decision;

(2) A statement of the amount in dispute;

(3) A description of the issues involved; and

(4) A concise statement of the objections to the final decision.

(e) The disputant(s) may be represented by counsel and may submit documentary evidence and briefs for inclusion in a written record.

(f) Disputants are entitled to an informal conference with EPA officials.

(g) Disputants are entitled to a written decision from the appropriate Regional or Assistant Administrator.

(h) A decision by the Assistant Administrator to confirm the final decision of a Headquarters disputes decision official will constitute the final Agency action.

(i) A decision by the Regional Administrator to confirm the Regional disputes decision official's decision will constitute the final Agency action. However, a petition for discretionary review by the Assistant Administrator responsible for the assistance program may be filed within 30 calendar days of the Regional Administrator's decision. The petition shall be sent to the Assistant Administrator by registered mail, return receipt requested, and shall include:

(1) A copy of the Regional Administrator's decision; and

(2) A concise statement of the objections to the decision.

(j) If the Assistant Administrator decides not to review the Regional Administrator's decision, the Assistant Administrator will advise the disputant(s) in writing that the Regional Administrator's decision remains the final Agency action.

(k) If the Assistant Administrator decides to review the Regional Administrator's decision, the review will generally be limited to the written record on which the Regional Administrator's decision was based. The Assistant Administrator may allow the disputant(s) to submit briefs in support of the petition for review and may provide an opportunity for an informal conference in order to clarify technical or legal issues. After reviewing the Regional Administrator's decision, the Assistant Administrator will issue a written decision which will then become the final Agency action.

(l) Reviews may not be requested of:

(1) Decisions on requests for exceptions under § 31.6;

(2) Bid protest decisions under § 31.36(b)(12);

(3) National Environmental Policy Act decisions under part 6;

(4) Advanced wastewater treatment decisions of the Administrator; and

(5) Policy decisions of the EPA Audit Resolution Board.

[53 FR 8076, Mar. 11, 1988]

APPENDIX A TO PART 31—AUDIT REQUIREMENTS FOR STATE AND LOCAL GOVERNMENT RECIPIENTS

EXECUTIVE OFFICE OF THE PRESIDENT

Office of Management and Budget

Circular No. A–128

April 12, 1985

To the Heads of Executive Departments and Establishments.

Subject: Audits of State and Local Governments.

1. *Purpose.* This Circular is issued pursuant to the Single Audit Act of 1984, Public Law 98–502. It establishes audit requirements for State and local governments that receive Federal aid, and defines Federal responsibilities for implementing and monitoring those requirements.

2. *Supersession.* The Circular supersedes Attachment P, ''Audit Requirements,'' of Circular A–102, ''Uniform requirements for grants to State and local governments.''

3. *Background.* The Single Audit Act builds upon earlier efforts to improve audits of Federal aid programs. The Act requires State or local governments that receive $100,000 or more a year in Federal funds to have an audit made for that year. Section 7505 of the Act requires the Director of the Office of Management and Budget to prescribe policies, procedures and guidelines to implement the Act. It specifies that the Director shall designate ''cognizant'' Federal agencies, determine criteria for making appropriate charges to Federal programs for the cost of audits, and provide procedures to assure that small firms or firms owned and controlled by disadvantaged individuals have the opportunity to participate in contracts for single audits.

4. *Policy.* The Single Audit Act requires the following:

a. State or local governments that receive $100,000 or more a year in Federal financial assistance shall have an audit made in accordance with this Circular.

b. State or local governments that receive between $25,000 and $100,000 a year shall have an audit made in accordance with this Circular, or in accordance with Federal laws and regulations governing the programs they participate in.

c. State or local governments that receive less than $25,000 a year shall be exempt from compliance with the Act and other Federal audit requirements. These State and local governments shall be governed by audit requirements prescribed by State or local law or regulation.

d. Nothing in this paragraph exempts State or local governments from maintaining records of Federal financial assistance or

from providing access to such records to Federal agencies, as provided for in Federal law or in Circular A–102, ''Uniform requirements for grants to State or local governments.''

5. *Definitions.* For the purposes of this Circular the following definitions from the Single Audit Act apply:

a. *Cognizant agency* means the Federal agency assigned by the Office of Management and Budget to carry out the responsibilities described in paragraph 11 of this Circular.

b. *Federal financial assistance* means assistance provided by a Federal agency in the form of grants, contracts, cooperative agreements, loans, loan guarantees, property, interest subsidies, insurance, or direct appropriations, but does not include direct Federal cash assistance to individuals. It includes awards received directly from Federal agencies, or indirectly through other units of State and local governments.

c. *Federal agency* has the same meaning as the term *agency* in section 551(1) of Title 5, United States Code.

d. *Generally accepted accounting principles* has the meaning specified in the generally accepted government auditing standards.

e. *Generally accepted government auditing standards* means the *Standards for Audit of Government Organizations, Programs, Activities, and Functions,* developed by the Comptroller General, dated February 27, 1981.

f. *Independent auditor* means:

(1) A State or local government auditor who meets the independence standards specified in generally accepted government auditing standards; or

(2) A public accountant who meets such independence standards.

g. *Internal controls* means the plan of organization and methods and procedures adopted by management to ensure that:

(1) Resource use is consistent with laws, regulations, and policies;

(2) Resources are safeguarded against waste, loss, and misuse; and

(3) Reliable data are obtained, maintained, and fairly disclosed in reports.

h. *Indian tribe* means any Indian tribe, band, nations, or other organized group or community, including any Alaskan Native village or regional or village corporations (as defined in, or established under, the Alaskan Native Claims Settlement Act) that is recognized by the United States as eligible for the special programs and services provided by the United States to Indians because of their status as Indians.

i. *Local government* means any unit of local government within a State, including a county, a borough, municipality, city, town, township, parish, local public authority, special district, school district, intrastate district, council of governments, and any other instrumentality of local government.

j. *Major Federal Assistance Program,* as defined by Pub. L. 98–502, is described in the Attachment to this Circular.

k. *Public accountants* means those individuals who meet the qualification standards included in generally accepted government auditing standards for personnel performing government audits.

l. *State* means any State of the United States, the District of Columbia, the Commonwealth of Puerto Rico, the Virgin Islands, Guam, American Samoa, the Commonwealth of the Northern Mariana Islands, and the Trust Territory of the Pacific Islands, any instrumentality thereof, and any multi-State, regional, or interstate entity that has governmental functions and any Indian tribe.

m. *Subrecipient* means any person or government department, agency, or establishment that receives Federal financial assistance to carry out a program through a State or local government, but does not include an individual that is a beneficiary of such a program. A subrecipient may also be a direct recipient of Federal financial assistance.

6. *Scope of audit.* The Single Audit Act provides that:

a. The audit shall be made by an independent auditor in accordance with generally accepted government auditing standards covering financial and compliance audits.

b. The audit shall cover the entire operations of a State or local government or, at the option of that government, it may cover departments, agencies or establishments that received, expended, or otherwise administered Federal financial assistance during the year. However, if a State or local government receives $25,000 or more in General Revenue Sharing Funds in a fiscal year, it shall have an audit of its entire operations. A series of audits of individual departments, agencies, and establishments for the same fiscal year may be considered a single audit.

c. Public hospitals and public colleges and universities may be excluded from State and local audits and the requirements of this Circular. However, if such entities are excluded, audits of these entities shall be made in accordance with statutory requirements and the provisions of Circular A–110. ''Uniform requirements for grants to universities, hospitals, and other nonprofit organizations.''

d. The auditor shall determine whether:

(1) The financial statements of the government, department, agency or establishment present fairly its financial position and the results of its financial operations in accordance with generally accepted accounting principles:

(2) The organization has internal accounting and other control systems to provide reasonable assurance that it is managing Federal financial assistance programs in compliance with applicable laws and regulations; and

(3) The organization has complied with laws and regulations that may have material effect on its financial statements and on each major Federal assistance program.

7. *Frequency of audit.* Audits shall be made annually unless the State or local government has, by January 1, 1987, a constitutional or statutory requirement for less frequent audits. For those governments, the cognizant agency shall permit biennial audits, covering both years, if the government so requests. It shall also honor requests for biennial audits by governments that have an administrative policy calling for audits less frequent than annual, but only for fiscal years beginning before January 1, 1987.

8. *Internal control and compliance reviews.* The Single Audit Act requires that the independent auditor determine and report on whether the organization has internal control systems to provide reasonable assurance that it is managing Federal assistance programs in compliance with applicable laws and regulations.

a. *Internal control review.* In order to provide this assurance the auditor must make a study and evaluation of internal control systems used in administering Federal assistance programs. The study and evaluation must be made whether or not the auditor intends to place reliance on such systems. As part of this review, the auditor shall:

(1) Test whether these internal control systems are functioning in accordance with prescribed procedures.

(2) Examine the recipient's system for monitoring subrecipients and obtaining and acting on subrecipient audit reports.

b. *Compliance review.* The law also requires the auditor to determine whether the organization has complied with laws and regulations that may have a material effect on each major Federal assistance program.

(1) In order to determine which major programs are to be tested for compliance, State and local governments shall identify in their accounts all Federal funds received and expended and the programs under which they were received. This shall include funds received directly from Federal agencies and through other State and local governments.

(2) The review must include the selection and testing of a representative number of charges from each major Federal assistance program. The selection and testing of transactions shall be based on the auditor's professional judgment considering such factors as the amount of expenditures for the program and the individual awards; the newness of the program or changes in its conditions; prior experience with the program, particularly as revealed in audits and other evaluations (e.g., inspections program reviews); the extent to which the program is carried out through subrecipients; the extent to which the program contracts for goods or services; the level to which the program is already subject to program reviews or other forms of independent oversight; the adequacy of the controls for ensuring compliance; the expectation of adherence or lack of adherence to the applicable laws and regulations; and the potential impact of adverse findings.

(a) In making the test of transactions, the auditor shall determine whether.

—The amounts reported as expenditures were for allowable services, and

—The records show that those who received services or benefits were eligible to receive them.

(b) In addition to transaction testing, the auditor shall determine whether:

—Matching requirements, levels of effort and earmarking limitations were met,

—Federal financial reports and claims for advances and reimbursements contain information that is supported by the books and records from which the basic financial statements have been prepared, and

—Amounts claimed or used for matching were determined in accordance with OMB Circular A–87, ''Cost principles for State and local governments,'' and Attachment F of Circular A–102, ''Uniform requirements for grants to State and local governments.''

(c) The principal compliance requirements of the largest Federal aid programs may be ascertained by referring to the *Compliance Supplement for Single Audits of State and Local Governments,* issued by OMB and available from the Government Printing Office. For those programs not covered in the Compliance Supplement, the auditor may ascertain compliance requirements by researching the statutes, regulations, and agreements governing individual programs.

(3) Transactions related to other Federal assistance programs that are selected in connection with examinations of financial statements and evaluations of internal controls shall be tested for compliance with Federal laws and regulations that apply to such transactions.

9. *Subrecipients.* State or local governments that receive Federal financial assistance and provide $25,000 or more of it in a fiscal year to a subrecipient shall:

a. Determine whether State or local subrecipients have met the audit requirements of this Circular and whether subrecipients covered by Circular A–110. ''Uniform requirements for grants to universities, hospitals, and other nonprofit organizations,'' have met that requirement;

b. Determine whether the subrecipient spent Federal assistance funds provided in accordance with applicable laws and regulations. This may be accomplished by reviewing an audit of the subrecipient made in accordance with this Circular, Circular A–110,

or through other means (e.g., program reviews) if the subrecipient has not yet had such an audit;

c. Ensure that appropriate corrective action is taken within six months after receipt of the audit report in instances of noncompliance with Federal laws and regulations;

d. Consider whether subrecipient audits necessitate adjustment of the recipient's own records; and

e. Require each subrecipient to permit independent auditors to have access to the records and financial statements as necessary to comply with this Circular.

10. *Relation to other audit requirements.* The Single Audit Act provides that an audit made in accordance with this Circular shall be in lieu of any financial or financial compliance audit required under individual Federal assistance programs. To the extent that a single audit provides Federal agencies with information and assurance they need to carry out their overall responsibilities, they shall rely upon and use such information. However, a Federal agency shall make any additional audits which are necessary to carry out its responsibilities under Federal law and regulation. Any additional Federal audit effort shall be planned and carried out in such a way as to avoid duplication.

a. The provisions of this Circular do not limit the authority of Federal agencies to make, or contract for audits and evaluations of Federal financial assistance programs, nor do they limit the authority of any Federal agency Inspector General or other Federal audit official.

b. The provisions of this Circular do not authorize any State or local government or subrecipient thereof to constrain Federal agencies, in any manner, from carrying out additional audits.

c. A Federal agency that makes or contracts for audits in additon to the audits made by recipients pursuant to this Circular shall, consistent with other applicable laws and regulations, arrange for funding the cost of such additional audits. Such additional audits include economy and efficiency audits, program results audits, and program evaluations.

11. *Cognizant agency responsibilities.* The Single Audit Act provides for congnizant Federal agencies to oversee the implementation of this Circular.

a. The Office of Management and Budget will assign cognizant agencies for States and their subdivisions and larger local governments and their subdivisions. Other Federal agencies may participate with an assigned cognizant agency, in order to fulfill the cognizant responsibilities. Smaller governments not assigned a cognizant agency will be under the general oversight of the Federal agency that provides them the most funds whether directly or indirectly.

b. A cognizant agency shall have the following responsibilities:

(1) Ensure that audits are made and reports are received in a timely manner and in accordance with the requirements of this Circular.

(2) Provide technical advice and liaison to State and local governments and independent auditors.

(3) Obtain or make quality control reviews of selected audits made by non-Federal audit organizations, and provide the results, when appropriate, to other interested organizations.

(4) Promptly inform other affected Federal agencies and appropriate Federal law enforcement officials of any reported illegal acts or irregularities. They should also inform State or local law enforcement and prosecuting authorities, if not advised by the recipient, of any violation of law within their jurisdiction.

(5) Advise the recipient of audits that have been found not to have met the requirements set forth in this Circular. In such instances, the recipient will be expected to work with the auditor to take corrective action. If corrective action is not taken, the cognizant agency shall notify the recipient and Federal awarding agencies of the facts and make recommendations for followup action. Major inadequacies or repetitive substandard performance of independent auditors shall be referred to appropriate professional bodies for disciplinary action.

(6) Coordinate, to the extent practicable, audits made by or for Federal agencies that are in addition to the audits made pursuant to this Circular, so that the additional audits build up such audits.

(7) Oversee the resolution of audit findings that affect the programs of more than one agency.

12. *Illegal acts or irregularities.* If the auditor becomes aware of illegal acts or other irregularities, prompt notice shall be given to recipient management officials above the level of involvement. (See also program 13(a)(3) below for the auditor's reporting responsibilities.) The recipient, in turn, shall promptly notify the cognizant agency of the illegal acts or irregularities and of proposed and actual actions, if any. Illegal acts and irregularities include such matters as conflicts of interest, falsification of records or reports, and misappropriations of funds or other assets.

13. *Audit Reports.* Audit reports must be prepared at the completion of the audit. Reports serve many needs of State and local governments as well as meeting the requirements of the Single Audit Act.

a. The audit report shall state that the audit was made in accordance with the provisions of this Circular. The report shall be made up of at least:

(1) The auditor's report on financial statements and on a schedule of Federal assistance; the financial statements; and a schedule of Federal assistance, showing the total expenditures for each Federal assitance program as identified in the *Catalog of Federal Domestic Assistance.* Federal programs or grants that have not been assigned a catalog number shall be identified under the caption ''other Federal assistance.''

(2) The author's report on the study and evaluation of internal control systems must identify the organization's significant internal accounting controls, and those controls designed to provide reasonable assurance that Federal programs are being managed in compliance with laws and regulations. It must also identify the controls that were evaluated, the controls that were not evaluated, and the material weaknesses identified as a result of the evaluation.

(3) The auditor's report on compliance containing:

—A statement of positive assurance with respect to those items tested for compliance, including compliance with law and regulations pertaining to financial reports and claims for advances and reimbursements;

—Negative assurance on those items not tested;

—A summary of all instances of noncompliance; and

—An identification of total amounts questioned, if any, for each Federal assistance award, as a result of noncompliance.

b. The three parts of the audit report may be bound into a single report, or presented at the same time as separate documents.

c. All fraud abuse, or illegal acts or indications of such acts, including all questioned costs found as the result of these acts that auditors become aware of, should normally be covered in a separate written report submitted in accordance with paragraph 13f.

d. In addition to the audit report, the recipient shall provide comments on the findings and recommendations in the report, including a plan for corrective action taken or planned and comments on the status of corrective action taken on prior findings. If corrective action is not necessary, a statement describing the reason it is not should accompany the audit report.

e. The reports shall be made available by the State or local government for public inspection within 30 days after the completion of the audit.

f. In accordance with generally accepted government audit standards, reports shall be submitted by the auditor to the organization audited and to those requiring or arranging for the audit. In addition, the recipient shall submit copies of the reports to each Federal department or agency that provided Federal assistance funds to the recipient. Subrecipients shall submit copies to recipients that provided them Federal assistance funds. The reports shall be sent within 30 days after the completion of the audit, but no later than one year after the end of the audit period unless a longer period is agreed to with the cognizant agency.

g. Recipients of more than $100,000 in Federal funds shall submit one copy of the audit report within 30 days after issuance to a central clearinghouse to be designated by the Office of Management and Budget. The clearinghouse will keep completed audits on file and follow up with State and local governments that have not submitted required audit reports.

h. Recipients shall keep audit reports on file for three years from their issuance.

14. *Audit Resolution.* As provided in paragraph 11, the cognizant agency shall be responsible for monitoring the resolution of audit findings that affect the programs of more than one Federal agency. Resolution of findings that relate to the programs of a single Federal agency will be the responsibility of the recipient and that agency. Alternate arrangements may be made on a case-by-case basis by agreement among the agencies concerned.

Resolution shall be made within six months after receipt of the report by the Federal departments and agencies. Corrective action should proceed as rapidly as possible.

15. *Audit workpapers and reports.* Workpapers and reports shall be retained for a minimum of three years from the date of the audit report, unless the auditor is notified in writing by the cognizant agency to extend the retention period. Audit workpapers shall be made available upon request to the cognizant agency or its designee or the General Accounting Office, at the completion of the audit.

16. *Audit Costs.* The cost of audits made in accordance with the provisions of this Circular are allowable charges to Federal assistance programs.

a. The charges may be considered a direct cost or an allocated indirect cost, determined in accordance with the provision of Circular A–87, ''Cost principles for State and local governments.''

b. Generally, the percentage of costs charged to Federal assistance programs for a single audit shall not exceed the percentage that Federal funds expended represent of total funds expended by the recipient during the fiscal year. The percentage may be exceeded, however, if appropriate documentation demonstrates higher actual cost.

17. *Sanctions.* The Single Audit Act provides that no cost may be charged to Federal assistance programs for audits required by the Act that are not made in accordance with this Circular. In cases of continued inability or unwillingness to have a proper

audit, Federal agencies must consider other appropriate sanctions including:

—Withholding a percentage of assistance payments until the audit its completed satisfactorily,
—Withholding or disallowing overhead costs, and
—Suspending the Federal assistance agreement until the audit is made.

18. *Auditor Selection.* In arranging for audit services State and local governments shall follow the procurement standards prescribed by Attachment O of Circular A–102, ''Uniform requirements for grants to State and local governments.'' The standards provide that while recipients are encouraged to enter into intergovernmental agreements for audit and other services, analysis should be made to determine whether it would be more economical to purchase the services from private firms. In instances where use of such intergovernmental agreements are required by State statutes (e.g., audit services) these statutes will take precedence.

19. *Small and Minority Audit Firms.* Small audit firms and audit firms owned and controlled by socially and economically disadvantaged individuals shall have the maximum practicable opportunity to participate in contracts awarded to fulfill the requirements of this Circular. Recipients of Federal assistance shall take the following steps to further this goal:

a. Assure that small audit firms and audit firms owned and controlled by socially and economically disadvantaged individuals are used to the fullest extent practicable.

b. Make information on forthcoming opportunities available and arrange timeframes for the audit so as to encourage and facilitate participation by small audit firms and audit firms owned and controlled by socially and economically disadvantaged individuals.

c. Consider in the contract process whether firms competing for larger audits intend to subcontract with small audit firms and audit firms owned and controlled by socially and economically disadvantaged individuals.

d. Encourage contracting with small audit firms or audit firms owned and controlled by socially and economically disadvantaged individuals which have traditionally audited government programs and, in such cases where this is not possible, assure that these firms are given consideration for audit subcontracting opportunities.

e. Encourage contracting with consortiums of small audit firms as described in paragraph (a) above when a contract is too large for an individual small audit firm or audit firm owned and controlled by socially and economically disadvantaged individuals.

f. Use the services and assistance, as appropriate, of such organizations as the Small Business Administration in the solicitation and utilization of small audit firms or audit firms owned and controlled by socially and economically disadvantaged individuals.

20. *Reporting.* Each Federal agency will report to the Director of OMB on or before March 1, 1987, and annually thereafter on the effectiveness of State and local governments in carrying out the provisions of this Circular. The report must identify each State or local government or Indian tribe that, in the opinion of the agency, is failing to comply with the Circular.

21. *Regulations.* Each Federal agency shall include the provisions of this Circular in its regulations implementing the Single Audit Act.

22. *Effective date.* This Circular is effective upon publication and shall apply to fiscal years of State and local governments that begin after December 31, 1984. Earlier implementation is encouraged. However, until it is implemented, the audit provisions of Attachment P to Circular A–102 shall continue to be observed.

23. *Inquiries,* All questions or inquiries should be addressed to Financial Management Division, Office of Management and Budget, telephone number 202/395–3993.

24. *Sunset review date.* This Circular shall have an independent policy review to ascertain its effectiveness three years from the date of issuance.

DAVID A. STOCKMAN,
Director.

ATTACHMENT—CIRCULAR A–128

Definition of Major Program as Provided in Pub. L. 96–502

Major Federal Assistance Program, for State and local governments having Federal assistance expenditures between $100,000 and $100,000,000, means any program for which Federal expenditures during the applicable year exceed the larger of $308,000, or 3 percent of such total expenditures.

Where total expenditures of Federal assistance exceed $100,000,000, the following criteria apply:

Total expenditures of Federal financial assistance for all programs		Major Federal assistance program means any program that exceeds
More than	But less than	
$100 million	$1 billion	$3 million.
$1 billion	$2 billion	$4 million.
$2 billion	$3 billion	$7 million.
$3 billion	$4 billion	$10 million.
$4 billion	$5 billion	$13 million.
$5 billion	$6 billion	$16 million.
$6 billion	$7 billion	$19 million.
Over $7 billion		$20 million.

[51 FR 6353, Feb. 21, 1986. Redesignated at 53 FR 8076, Mar. 11, 1988]

PART 32—GOVERNMENTWIDE DEBARMENT AND SUSPENSION (NONPROCUREMENT) AND GOVERNMENTWIDE REQUIREMENTS FOR DRUG-FREE WORKPLACE (GRANTS); CLEAN AIR ACT AND CLEAN WATER ACT INELIGIBILITY OF FACILITIES IN PERFORMANCE OF FEDERAL CONTRACTS, GRANTS AND LOANS

Subpart A—General

Sec.
32.100 Purpose.
32.105 Definitions.
32.110 Coverage.
32.115 Policy.

Subpart B—Effect of Action

32.200 Debarment or suspension.
32.205 Ineligible persons.
32.210 Voluntary exclusion.
32.215 Exception provision.
32.220 Continuation of covered transactions.
32.225 Failure to adhere to restrictions.

Subpart C—Debarment

32.300 General.
32.305 Causes for debarment.
32.310 Procedures.
32.311 Investigation and referral.
32.312 Notice of proposed debarment.
32.313 Opportunity to contest proposed debarment.
32.314 Debarring official's decision.
32.315 Settlement and voluntary exclusion.
32.320 Period of debarment.
32.321 Reinstatement of facility eligibility.
32.325 Scope of debarment.
32.335 Appeal.

Subpart D—Suspension

32.400 General.
32.405 Causes for suspension.
32.410 Procedures.
32.411 Notice of suspension.
32.412 Opportunity to contest suspension.
32.413 Suspending official's decision.
32.415 Period of suspension.
32.420 Scope of suspension.
32.430 Appeal.

Subpart E—Responsibilities of GSA, Agency and Participants

32.500 GSA responsibilities.
32.505 EPA responsibilities.
32.510 Participants' responsibilities.

Subpart F—Drug-Free Workplace Requirements (Grants)

32.600 Purpose.
32.605 Definitions.
32.610 Coverage.
32.615 Grounds for suspension of payments, suspension or termination of grants, or suspension or debarment.
32.620 Effect of violation.
32.625 Exception provision.
32.630 Certification requirements and procedures.
32.635 Reporting of and employee sanctions for convictions of criminal drug offenses.

APPENDIX A TO PART 32—CERTIFICATION REGARDING DEBARMENT, SUSPENSION, AND OTHER RESPONSIBILITY MATTERS—PRIMARY COVERED TRANSACTIONS

APPENDIX B TO PART 32—CERTIFICATION REGARDING DEBARMENT, SUSPENSION, INELIGIBILITY AND VOLUNTARY EXCLUSION—LOWER-TIER COVERED TRANSACTION

APPENDIX C TO PART 32—CERTIFICATION REGARDING DRUG-FREE WORKPLACE REQUIREMENTS

AUTHORITY: E.O. 12549; 41 U.S.C. 701 *et seq.*; 7 U.S.C. 136 *et seq.*; 15 U.S.C. 2601 *et seq.*; 20 U.S.C. 4011 *et seq.*; 33 U.S.C. 1251 *et seq.*; 42 U.S.C. 300f, 4901, 6901, 7401, 9801 *et seq.*; E.O. 12689; E.O. 11738; Pub. L. 103–355 §2455.

SOURCE: 53 FR 19196, 19204, May 26, 1988, unless otherwise noted.

EDITORIAL NOTE: For nomenclature change see 53 FR 19196, May 26, 1988.

CROSS REFERENCE: See also Office of Management and Budget notice published at 55 FR 21679, May 25, 1990, and at 60 FR 33036, June 26, 1995.

Subpart A—General

§32.100 Purpose.

(a) Executive Order (E.O.) 12549 provides that, to the extent permitted by law, Executive departments and agencies shall participate in a governmentwide system for nonprocurement debarment and suspension. A person who is debarred or suspended shall be excluded from Federal financial and nonfinancial assistance and benefits under Federal programs and activities. Debarment or suspension of a participant in a program by one agency shall have governmentwide effect.

(b) These regulations implement section 3 of E.O. 12549 and the guidelines promulgated by the Office of Management and Budget under section 6 of the E.O. by:

(1) Prescribing the programs and activities that are covered by the governmentwide system;

(2) Prescribing the governmentwide criteria and governmentwide minimum due process procedures that each agency shall use;

(3) Providing for the listing of debarred and suspended participants, participants declared ineligible (see definition of ''ineligible'' in §32.105), and participants who have voluntarily excluded themselves from participation in covered transactions;

(4) Setting forth the consequences of a debarment, suspension, determination of ineligibility, or voluntary exclusion; and

(5) Offering such other guidance as necessary for the effective implementation and administration of the governmentwide system.

(c) These regulations also implement Executive Order 12689 (3 CFR, 1989 Comp., p. 235) and 31 U.S.C. 6101 note (Public Law 103–355, sec. 2455, 108 Stat. 3327) by—

(1) Providing for the inclusion in the *List of Parties Excluded from Federal Procurement and Nonprocurement Programs* all persons proposed for debarment, debarred or suspended under the Federal Acquisition Regulation, 48 CFR Part 9, subpart 9.4; persons against which governmentwide exclusions have been entered under this part; and persons determined to be ineligible; and

(2) Setting forth the consequences of a debarment, suspension, determination of ineligibility, or voluntary exclusion.

(d) Although these regulations cover the listing of ineligible participants and the effect of such listing, they do not prescribe policies and procedures governing declarations of ineligibility.

(e) Facilities ineligible to provide goods, materials, or services under Federal contracts, loans or assistance, pursuant to Section 306 of the Clean Air Act (CAA) or Section 508 of the Clean Water Act (CWA) are excluded in accordance with the terms of those statutes. Reinstatement of a CAA or CWA ineligible facility may be requested in accordance with the procedures at §32.321.

[60 FR 33040, 33059, June 26, 1995, as amended at 61 FR 28756, June 6, 1996]

§ 32.105 Definitions.

The following definitions apply to this part:

Adequate evidence. Information sufficient to support the reasonable belief that a particular act or omission has occurred.

Affiliate. Persons are affiliates of each other if, directly or indirectly, either one controls or has the power to control the other, *or*, a third person controls or has the power to control both. Indicia of control include, but are not limited to: interlocking management or ownership, identity of interests among family members, shared facilities and equipment, common use of employees, or a business entity organized following the suspension or debarment of a person which has the same or similar management, ownership, or principal employees as the suspended, debarred, ineligible, or voluntarily excluded person.

Agency. Any executive department, military department or defense agency or other agency of the executive branch, excluding the independent regulatory agencies.

Agency head. Administrator of the Environmental Protection Agency.

CAA or *CWA ineligibility.* The status of a facility which, as provided in section 306 of the Clean Air Act (CAA) and section 508 of the Clean Water Act (CWA), is ineligible to be used in the performance of a Federal contract, subcontract, loan, assistance award or covered transaction. Such ineligibility commences upon conviction of a facility owner, lessee, or supervisor for a violation of section 113 of the CAA or section 309(c) of the CWA, which violation occurred at the facility. The ineligibility of the facility continues until such time as the EPA Debarring Official certifies that the condition giving rise to the CAA or CWA criminal conviction has been corrected.

Civil judgment. The disposition of a civil action by any court of competent jurisdiction, whether entered by verdict, decision, settlement, stipulation, or otherwise creating a civil liability for the wrongful acts complained of; or a final determination of liability under the Program Fraud Civil Remedies Act of 1988 (31 U.S.C. 3801–12).

Conviction. A judgment or conviction of a criminal offense by any court of competent jurisdiction, whether entered upon a verdict or a plea, including a plea of nolo contendere.

Debarment. An action taken by a debarring official in accordance with these regulations to exclude a person from participating in covered transactions. A person so excluded is ''debarred.''

Debarring official. An official authorized to impose debarment. The debarring official is either:

(1) The agency head, or

(2) An official designated by the agency head.

(3) The Director, Office of Grants and Debarment, is the authorized Debarring Official.

EPA. Environmental Protection Agency.

Facility. Any building, plant, installation, structure, mine, vessel, floating craft, location or site of operations at which, or from which, a Federal contract, subcontract, loan, assistance award or covered transaction is to be performed. Where a location or site of operations contains or includes more than one building, plant, installation or structure, the entire location or site shall be deemed the facility unless otherwise limited by EPA.

Indictment. Indictment for a criminal offense. An information or other filing by competent authority charging a criminal offense shall be given the same effect as an indictment.

Ineligible. Excluded from participation in Federal nonprocurement programs pursuant to a determination of ineligibility under statutory, executive order, or regulatory authority, other than Executive Order 12549 and its agency implementing regulations; for exemple, excluded pursuant to the Davis-Bacon Act and its implementing regulations, the equal employment opportunity acts and executive orders, or the environmental protection acts and executive orders. A person is ineligible where the determination of ineligibility affects such person's eligibility to participate in more than one covered transaction.

Legal proceedings. Any criminal proceeding or any civil judicial proceeding to which the Federal Government or a State or local government or quasi-governmental authority is a party. The term includes appeals from such proceedings.

List of Parties Excluded from Federal Procurement and Nonprocurement Programs. A list compiled, maintained and distributed by the General Services Administration (GSA) containing the names and other information about persons who have been debarred, suspended, or voluntarily excluded under Executive Orders 12549 and 12689 and these regulations or 48 CFR part 9, subpart 9.4, persons who have been proposed for debarment under 48 CFR part 9, subpart 9.4, and those persons who have been determined to be ineligible.

Notice. A written communication served in person or sent by certified mail, return receipt requested, or its equivalent, to the last known address of a party, its identified counsel, its agent for service of process, or any partner, officer, director, owner, or joint venturer of the party. Notice, if undeliverable, shall be considered to have been received by the addressee five days after being properly sent to the last address known by the agency.

Participant. Any person who submits a proposal for, enters into, or reasonably may be expected to enter into a covered transaction. This term also includes any person who acts on behalf of or is authorized to commit a participant in a covered transaction as an agent or representative of another participant.

Person. Any individual, corporation, partnership, association, unit of government or legal entity, however organized, except: foreign governments or foreign governmental entities, public international organizations, foreign government owned (in whole or in part) or controlled entities, and entities consisting wholly or partially of foreign governments or foreign governmental entities.

Preponderance of the evidence. Proof by information that, compared with that opposing it, leads to the conclusion that the fact at issue is more probably true than not.

Principal. Officer, director, owner, partner, key employee, or other person within a participant with primary

management or supervisory responsibilities; or a person who has a critical influence on or substantive control over a covered transaction, whether or not employed by the participant. Persons who have a critical influence on or substantive control over a covered transaction are:

(1) Principal investigators.

(2) Bid and proposal estimators and preparers.

Proposal. A solicited or unsolicited bid, application, request, invitation to consider or similar communication by or on behalf of a person seeking to participate or to receive a benefit, directly or indirectly, in or under a covered transaction.

Respondent. A person against whom a debarment or suspension action has been initiated.

State. Any of the States of the United States, the District of Columbia, the Commonwealth of Puerto Rico, any territory or possession of the United States, or any agency of a State, exclusive of institutions of higher education, hospitals, and units of local government. A State instrumentality will be considered part of the State government if it has a written determination from a State government that such State considers that instrumentality to be an agency of the State government.

Suspending official. An official authorized to impose suspension. The suspending official is either:

(1) The agency head, or

(2) An official designated by the agency head.

(3) The Director, Office of Grants and Debarment, is the authorized Suspending Official.

Suspension. An action taken by a suspending official in accordance with these regulations that immediately excludes a person from participating in covered transactions for a temporary period, pending completion of an investigation and such legal, debarment, or Program Fraud Civil Remedies Act proceedings as may ensue. A person so excluded is ''suspended.''

Voluntary exclusion or voluntarily excluded. A status of nonparticipation or limited participation in covered transactions assumed by a person pursuant to the terms of a settlement.

[53 FR 19196, 19204, May 26, 1988, as amended at 53 FR 19196, May 26, 1988; 59 FR 50692, Oct. 5, 1994; 60 FR 33040, 33059, June 26, 1995; 61 FR 28756, June 6, 1996]

§ 32.110 Coverage.

(a) These regulations apply to all persons who have participated, are currently participating or may reasonably be expected to participate in transactions under Federal nonprocurement programs. For purposes of these regulations such transactions will be referred to as ''covered transactions.''

(1) *Covered transaction.* For purposes of these regulations, a covered transaction is a primary covered transaction or a lower tier covered transaction. Covered transactions at any tier need not involve the transfer of Federal funds.

(i) *Primary covered transaction.* Except as noted in paragraph (a)(2) of this section, a primary covered transaction is any nonprocurement transaction between an agency and a person, regardless of type, including: grants, cooperative agreements, scholarships, fellowships, contracts of assistance, loans, loan guarantees, subsidies, insurance, payments for specified use, donation agreements and any other nonprocurement transactions between a Federal agency and a person. Primary covered transactions also include those transactions specially designated by the U.S. Department of Housing and Urban Development in such agency's regulations governing debarment and suspension.

(ii) *Lower tier covered transaction.* A lower tier covered transaction is:

(A) Any transaction between a participant and a person other than a procurement contract for goods or services, regardless of type, under a primary covered transaction.

(B) Any procurement contract for goods or services between a participant and a person, regardless of type, expected to equal or exceed the Federal procurement small purchase threshold fixed at 10 U.S.C. 2304(g) and 41 U.S.C. 253(g) (currently $25,000) under a primary covered transaction.

(C) Any procurement contract for goods or services between a participant

and a person under a covered transaction, regardless of amount, under which that person will have a critical influence on or substantive control over that covered transaction. Such persons are:

(*1*) Principal investigators.

(*2*) Providers of federally-required audit services.

(2) *Exceptions.* The following transactions are not covered:

(i) Statutory entitlements or mandatory awards (but not subtier awards thereunder which are not themselves mandatory), including deposited funds insured by the Federal Government;

(ii) Direct awards to foreign governments or public international organizations, or transactions with foreign governments or foreign governmental entities, public international organizations, foreign government owned (in whole or in part) or controlled entities, entities consisting wholly or partially of foreign governments or foreign governmental entities;

(iii) Benefits to an individual as a personal entitlement without regard to the individual's present responsibility (but benefits received in an individual's business capacity are not excepted);

(iv) Federal employment;

(A) For the purpose of this paragraph, no transactions under EPA assistance programs are deemed to be pursuant to agency-recognized emergencies or disasters.

(B) [Reserved]

(v) Transactions pursuant to national or agency-recognized emergencies or disasters;

(vi) Incidental benefits derived from ordinary governmental operations; and

(vii) Other transactions where the application of these regulations would be prohibited by law.

(b) *Relationship to other sections.* This section describes the types of transactions to which a debarment or suspension under the regulations will apply. Subpart B, ''Effect of Action,'' §32.200, ''Debarment or suspension,'' sets forth the consequences of a debarment or suspension. Those consequences would obtain only with respect to participants and principals in the covered transactions and activities described in §32.110(a). Sections 32.325, ''Scope of debarment,'' and 32.420, ''Scope of suspension,'' govern the extent to which a specific participant or organizational elements of a participant would be automatically included within a debarment or suspension action, and the conditions under which affiliates or persons associated with a participant may also be brought within the scope of the action.

(c) *Relationship to Federal procurement activities.* In accordance with E.O. 12689 and section 2455 of Public Law 103–355, any debarment, suspension, proposed debarment or other governmentwide exclusion initiated under the Federal Acquisition Regulation (FAR) on or after August 25, 1995 shall be recognized by and effective for Executive Branch agencies and participants as an exclusion under this regulation. Similarly, any debarment, suspension or other governmentwide exclusion initiated under this regulation on or after August 25, 1995 shall be recognized by and effective for those agencies as a debarment or suspension under the FAR.

(d) Except as provided in §32.215 of this part, Federal agencies shall not use a CAA or CWA ineligible facility in the performance of any Federal contract, subcontract, loan, assistance award or covered transaction.

[53 FR 19196, 19204, May 26, 1988, as amended at 53 FR 19197, May 26, 1988; 60 FR 33041, 33059, June 26, 1995; 61 FR 28757, June 6, 1996]

§32.115 Policy.

(a) In order to protect the public interest, it is the policy of the Federal Government to conduct business only with responsible persons. Debarment and suspension are discretionary actions that, taken in accordance with Executive Order 12549 and these regulations, are appropriate means to implement this policy.

(b) Debarment and suspension are serious actions which shall be used only in the public interest and for the Federal Government's protection and not for purposes of punishment. Agencies may impose debarment or suspension for the causes and in accordance with the procedures set forth in these regulations.

(c) When more than one agency has an interest in the proposed debarment or suspension of a person, consideration shall be given to designating one

agency as the lead agency for making the decision. Agencies are encouraged to establish methods and procedures for coordinating their debarment or suspension actions.

(d) It is EPA policy to exercise its authority to reinstate CAA or CWA ineligible facilities in a manner which is consistent with the policies in paragraphs (a) and (b) of this section.

[53 FR 19196, 19204, May 26, 1988, as amended at 53 FR 19197, May 26, 1988; 61 FR 28757, June 6, 1996]

Subpart B—Effect of Action

§ 32.200 Debarment or suspension.

(a) *Primary covered transactions.* Except to the extent prohibited by law, persons who are debarred or suspended shall be excluded from primary covered transactions as either participants or principals throughout the Executive Branch of the Federal Government for the period of their debarment, suspension, or the period they are proposed for debarment under 48 CFR part 9, subpart 9.4. Accordingly, no agency shall enter into primary covered transactions with such excluded persons during such period, except as permitted pursuant to § 32.215.

(b) *Lower tier covered transactions.* Except to the extent prohibited by law, persons who have been proposed for debarment under 48 CFR part 9, subpart 9.4, debarred or suspended shall be excluded from participating as either participants or principals in all lower tier covered transactions (see § 32.110(a)(1)(ii)) for the period of their exclusion.

(c) *Exceptions.* Debarment or suspension does not affect a person's eligibility for—

(1) Statutory entitlements or mandatory awards (but not subtier awards thereunder which are not themselves mandatory), including deposited funds insured by the Federal Government;

(2) Direct awards to foreign governments or public international organizations, or transactions with foreign governments or foreign governmental entities, public international organizations, foreign government owned (in whole or in part) or controlled entities, and entities consisting wholly or partially of foreign governments or foreign governmental entities;

(3) Benefits to an individual as a personal entitlement without regard to the individual's present responsibility (but benefits received in an individual's business capacity are not excepted);

(4) Federal employment;

(5) Transactions pursuant to national or agency-recognized emergencies or disasters;

(6) Incidental benefits derived from ordinary governmental operations; and

(7) Other transactions where the application of these regulations would be prohibited by law.

[60 FR 33041, 33059, June 26, 1995]

§ 32.205 Ineligible persons.

Persons who are ineligible, as defined in § 32.105(i), are excluded in accordance with the applicable statutory, executive order, or regulatory authority.

§ 32.210 Voluntary exclusion.

Persons who accept voluntary exclusions under § 32.315 are excluded in accordance with the terms of their settlements. EPA shall, and participants may, contact the original action agency to ascertain the extent of the exclusion.

§ 32.215 Exception provision.

(a) EPA may grant an exception permitting a debarred, suspended, or voluntarily excluded person, or a person proposed for debarment under 48 CFR part 9, subpart 9.4, to participate in a particular covered transaction upon a written determination by the agency head or an authorized designee stating the reason(s) for deviating from the Presidential policy established by Executive Order 12549 and § 32.200. However, in accordance with the President's stated intention in the Executive Order, exceptions shall be granted only infrequently. Exceptions shall be reported in accordance with § 32.505(a).

(b) Any agency head, or authorized designee, may except any Federal contract, subcontract, loan, assistance award or covered transaction, individually or as a class, in whole or in part, from the prohibitions otherwise applicable by reason of a CAA or CWA ineligibility. The agency head granting the

exception shall notify the EPA Debarring Official of the exception as soon, before or after granting the exception, as may be practicable. The justification for such an exception, or any renewal thereof, shall fully describe the purpose of the contract or covered transaction, and show why the paramount interest of the United States requires the exception.

(c) The EPA Debarring Official is the official authorized to grant exceptions under this section for EPA.

[61 FR 28757, June 6, 1996]

§32.220 Continuation of covered transactions.

(a) Notwithstanding the debarment, suspension, proposed debarment under 48 CFR part 9, subpart 9.4, determination of ineligibility, or voluntary exclusion of any person by an agency, agencies and participants may continue covered transactions in existence at the time the person was debarred, suspended, proposed for debarment under 48 CFR part 9, subpart 9.4, declared ineligible, or voluntarily excluded. A decision as to the type of termination action, if any, to be taken should be made only after thorough review to ensure the propriety of the proposed action.

(b) Agencies and participants shall not renew or extend covered transactions (other than no-cost time extensions) with any person who is debarred, suspended, proposed for debarment under 48 CFR part 9, subpart 9.4, ineligible or voluntary excluded, except as provided in §32.215.

[60 FR 33041, 33059, June 26, 1995]

§32.225 Failure to adhere to restrictions.

(a) Except as permitted under §32.215 or §32.220, a participant shall not knowingly do business under a covered transaction with a person who is—

(1) Debarred or suspended;

(2) Proposed for debarment under 48 CFR part 9, subpart 9.4; or

(3) Ineligible for or voluntarily excluded from the covered transaction.

(b) Violation of the restriction under paragraph (a) of this section may result in disallowance of costs, annulment or termination of award, issuance of a stop work order, debarment or suspension, or other remedies as appropriate.

(c) A participant may rely upon the certification of a prospective participant in a lower tier covered transaction that it and its principals are not debarred, suspended, proposed for debarment under 48 CFR part 9, subpart 9.4, ineligible, or voluntarily excluded from the covered transaction (See appendix B of these regulations), unless it knows that the certification is erroneous. An agency has the burden of proof that a participant did knowingly do business with a person that filed an erroneous certification.

[60 FR 33041, 33059, June 26, 1995]

Subpart C—Debarment

§32.300 General.

The debarring official may debar a person for any of the causes in §32.305, using procedures established in §§32.310 through 32.314. The existence of a cause for debarment, however, does not necessarily require that the person be debarred; the seriousness of the person's acts or omissions and any mitigating factors shall be considered in making any debarment decision.

§32.305 Causes for debarment.

Debarment may be imposed in accordance with the provisions of §§32.300 through 32.314 for:

(a) Conviction of or civil judgment for:

(1) Commission of fraud or a criminal offense in connection with obtaining, attempting to obtain, or performing a public or private agreement or transaction;

(2) Violation of Federal or State antitrust statutes, including those proscribing price fixing between competitors, allocation of customers between competitors, and bid rigging;

(3) Commission of embezzlement, theft, forgery, bribery, falsification or destruction of records, making false statements, receiving stolen property, making false claims, or obstruction of justice; or

(4) Commission of any other offense indicating a lack of business integrity or business honesty that seriously and

directly affects the present responsibility of a person.

(b) Violation of the terms of a public agreement or transaction so serious as to affect the integrity of an agency program, such as:

(1) A willful failure to perform in accordance with the terms of one or more public agreements or transactions;

(2) A history of failure to perform or of unsatisfactory performance of one or more public agreements or transactions; or

(3) A willful violation of a statutory or regulatory provision or requirement applicable to a public agreement or transaction.

(c) Any of the following causes:

(1) A nonprocurement debarment by any Federal agency taken before October 1, 1988, the effective date of these regulations, or a procurement debarment by any Federal agency taken pursuant to 48 CFR subpart 9.4;

(2) Knowingly doing business with a debarred, suspended, ineligible, or voluntarily excluded person, in connection with a covered transaction, except as permitted in §§ 32.215 or 32.220;

(3) Failure to pay a single substantial debt, or a number of outstanding debts (including disallowed costs and overpayments, but not including sums owed the Federal Government under the Internal Revenue Code) owed to any Federal agency or instrumentality, provided the debt is uncontested by the debtor or, if contested, provided that the debtor's legal and administrative remedies have been exhausted;

(4) Violation of a material provision of a voluntary exclusion agreement entered into under § 32.315 or of any settlement of a debarment or suspension action; or

(5) Violation of any requirement of subpart F of this part, relating to providing a drug-free workplace, as set forth in § 32.615 of this part.

(d) Any other cause of so serious or compelling a nature that it affects the present responsibility of a person.

[53 FR 19196, 19204, May 26, 1988, as amended at 54 FR 4962, Jan. 31, 1989]

§ 32.310 Procedures.

EPA shall process debarment actions as informally as practicable, consistent with the principles of fundamental fairness, using the procedures in §§ 32.311 through 32.314.

§ 32.311 Investigation and referral.

Information concerning the existence of a cause for debarment from any source shall be promptly reported, investigated, and referred, when appropriate, to the debarring official for consideration. After consideration, the debarring official may issue a notice of proposed debarment.

§ 32.312 Notice of proposed debarment.

A debarment proceeding shall be initiated by notice to the respondent advising:

(a) That debarment is being considered;

(b) Of the reasons for the proposed debarment in terms sufficient to put the respondent on notice of the conduct or transaction(s) upon which it is based;

(c) Of the cause(s) relied upon under § 32.305 for proposing debarment;

(d) Of the provisions of § 32.311 through § 32.314, and any other EPA procedures, if applicable, governing debarment decisionmaking; and

(e) Of the potential effect of a debarment.

§ 32.313 Opportunity to contest proposed debarment.

(a) *Submission in opposition.* Within 30 days after receipt of the notice of proposed debarment, the respondent may submit, in person, in writing, or through a representative, information and argument in opposition to the proposed debarment.

(1) If the respondent desires a hearing, it shall submit a written request to the debarring official within the 30-day period following receipt of the notice of proposed debarment.

(2) [Reserved]

(b) *Additional proceedings as to disputed material facts.* (1) In actions not based upon a conviction or civil judgment, if the debarring official finds that the respondent's submission in opposition raises a genuine dispute over facts material to the proposed debarment, respondent(s) shall be afforded

an opportunity to appear with a representative, submit documentary evidence, present witnesses, and confront any witness the agency presents.

(2) A transcribed record of any additional proceedings shall be made available at cost to the respondent, upon request, unless the respondent and the agency, by mutual agreement, waive the requirement for a transcript.

[53 FR 19196, 19204, May 26, 1988, as amended at 53 FR 19197, May 26, 1988]

§ 32.314 Debarring official's decision.

(a) *No additional proceedings necessary.* In actions based upon a conviction or civil judgment, or in which there is no genuine dispute over material facts, the debarring official shall make a decision on the basis of all the information in the administrative record, including any submission made by the respondent. The decision shall be made within 45 days after receipt of any information and argument submitted by the respondent, unless the debarring official extends this period for good cause.

(b) *Additional proceedings necessary.* (1) In actions in which additional proceedings are necessary to determine disputed material facts, written findings of fact shall be prepared. The debarring official shall base the decision on the facts as found, together with any information and argument submitted by the respondent and any other information in the administrative record.

(2) The debarring official may refer disputed material facts to another official for findings of fact. The debarring official may reject any such findings, in whole or in part, only after specifically determining them to be arbitrary and capricious or clearly erroneous.

(3) The debarring official's decision shall be made after the conclusion of the proceedings with respect to disputed facts.

(c) (1) *Standard of proof.* In any debarment action, the cause for debarment must be established by a preponderance of the evidence. Where the proposed debarment is based upon a conviction or civil judgment, the standard shall be deemed to have been met.

(2) *Burden of proof.* The burden of proof is on the agency proposing debarment.

(d) *Notice of debarring official's decision.* (1) If the debarring official decides to impose debarment, the respondent shall be given prompt notice:

(i) Referring to the notice of proposed debarment;

(ii) Specifying the reasons for debarment;

(iii) Stating the period of debarment, including effective dates; and

(iv) Advising that the debarment is effective for covered transactions throughout the executive branch of the Federal Government unless an agency head or an authorized designee makes the determination referred to in § 32.215.

(2) If the debarring official decides not to impose debarment, the respondent shall be given prompt notice of that decision. A decision not to impose debarment shall be without prejudice to a subsequent imposition of debarment by any other agency.

§ 32.315 Settlement and voluntary exclusion.

(a) When in the best interest of the Government, EPA may, at any time, settle a debarment or suspension action.

(1) The debarring and suspending official is the official authorized to settle debarment or suspension actions.

(2) [Reserved]

(b) If a participant and the agency agree to a voluntary exclusion of the participant, such voluntary exclusion shall be entered on the Nonprocurement List (see subpart E).

(c) The EPA Debarring Official may consider matters regarding present responsibility, as well as any other matter regarding the conditions giving rise to alleged CAA or CWA violations in anticipation of entry of a plea, judgment or conviction. If, at any time, it is in the interest of the United States to conclude such matters pursuant to a comprehensive settlement agreement, the EPA Debarring Official may conclude the debarment and ineligibility matters as part of any such settlement, so long as he or she certifies that the condition giving rise to the CAA or CWA violation has been corrected.

[53 FR 19196, 19204, May 26, 1988, as amended at 53 FR 19197, May 26, 1988; 61 FR 28757, June 6, 1996]

§ 32.320 Period of debarment.

(a) Debarment shall be for a period commensurate with the seriousness of the cause(s). If a suspension precedes a debarment, the suspension period shall be considered in determining the debarment period.

(1) Debarment for causes other than those related to a violation of the requirements of subpart F of this part generally should not exceed three years. Where circumstances warrant, a longer period of debarment may be imposed.

(2) In the case of a debarment for a violation of the requirements of subpart F of this part (*see* § 32.305(c)(5)), the period of debarment shall not exceed five years.

(b) The debarring official may extend an existing debarment for an additional period, if that official determines that an extension is necessary to protect the public interest. However, a debarment may not be extended solely on the basis of the facts and circumstances upon which the initial debarment action was based. If debarment for an additional period is determined to be necessary, the procedures of §§ 32.311 through 32.314 shall be followed to extend the debarment.

(c) The respondent may request the debarring official to reverse the debarment decision or to reduce the period or scope of debarment. Such a request shall be in writing and supported by documentation. The debarring official may grant such a request for reasons including, but not limited to:

(1) Newly discovered material evidence;

(2) Reversal of the conviction or civil judgment upon which the debarment was based;

(3) Bona fide change in ownership or management;

(4) Elimination of other causes for which the debarment was imposed; or

(5) Other reasons the debarring official deems appropriate.

[53 FR 19196, 19204, May 26, 1988, as amended at 54 FR 4962, Jan. 31, 1989]

§ 32.321 Reinstatement of facility eligibility.

(a) A written petition to reinstate the eligibility of a CAA or CWA ineligible facility may be submitted to the EPA Debarring Official. The petitioner bears the burden of providing sufficient information and documentation to establish, by a preponderance of the evidence, that the condition giving rise to the CAA or CWA conviction has been corrected. If the material facts set forth in the petition are disputed, and the Debarring Official denies the petition, the petitioner shall be afforded the opportunity to have additional proceedings as provided in § 32.314(b).

(b) A decision by the EPA Debarring Official denying a petition for reinstatement may be appealed under § 32.335.

[61 FR 28757, June 6, 1996]

§ 32.325 Scope of debarment.

(a) *Scope in general.* (1) Debarment of a person under these regulations constitutes debarment of all its divisions and other organizational elements from all covered transactions, unless the debarment decision is limited by its terms to one or more specifically identified individuals, divisions or other organizational elements or to specific types of transactions.

(2) The debarment action may include any affiliate of the participant that is specifically named and given notice of the proposed debarment and an opportunity to respond (see §§ 32.311 through 32.314).

(b) *Imputing conduct.* For purposes of determining the scope of debarment, conduct may be imputed as follows:

(1) *Conduct imputed to participant.* The fraudulent, criminal or other seriously improper conduct of any officer, director, shareholder, partner, employee, or other individual associated with a participant may be imputed to the participant when the conduct occurred in connection with the individual's performance of duties for or on behalf of the participant, or with the participant's knowledge, approval, or acquiescence. The participant's acceptance of the benefits derived from the conduct shall be evidence of such knowledge, approval, or acquiescence.

(2) *Conduct imputed to individuals associated with participant.* The fraudulent, criminal, or other seriously improper

conduct of a participant may be imputed to any officer, director, shareholder, partner, employee, or other individual associated with the participant who participated in, knew of, or had reason to know of the participant's conduct.

(3) *Conduct of one participant imputed to other participants in a joint venture.* The fraudulent, criminal, or other seriously improper conduct of one participant in a joint venture, grant pursuant to a joint application, or similar arrangement may be imputed to other participants if the conduct occurred for or on behalf of the joint venture, grant pursuant to a joint application, or similar arrangement may be imputed to other participants if the conduct occurred for or on behalf of the joint venture, grant pursuant to a joint application, or similar arrangement or with the knowledge, approval, or acquiescence of these participants. Acceptance of the benefits derived from the conduct shall be evidence of such knowledge, approval, or acquiescence.

§32.335 Appeal.

(a) The debarment determination under §32.314 shall be final. However, any party to the action may request the Assistant Administrator for Administration and Resources Management (Assistant Administrator), to review the findings of the Debarring Official by filing a request with the Assistant Administrator within 30 calendar days of the party's receipt of the debarment determination, or its reconsideration. The request must be in writing and set forth the specific reasons why relief should be granted.

(b) A review under this section shall be at the discretion of the Assistant Administrator. If a review is granted, the debarring official may stay the effective date of a debarment order pending resolution of the appeal. If a debarment is stayed, the stay shall be automatically lifted if the Assistant Administrator affirms the debarment.

(c) The review shall be based solely upon the record. The Assistant Administrator may set aside a determination only if it is found to be arbitrary, capricious, and abuse of discretion, or based upon a clear error of law.

(d) The Assistant Administrator's subsequent determination shall be in writing and mailed to all parties.

(e) A determination under §32.314 or a review under this section shall not be subject to a dispute or a bid protest under parts 30, 31 or 33 of this subchapter.

[53 FR 19197, May 26, 1988, as amended at 59 FR 50693, Oct. 5, 1994]

Subpart D—Suspension

§32.400 General.

(a) The suspending official may suspend a person for any of the causes in §32.405 using procedures established in §§32.410 through 32.413.

(b) Suspension is a serious action to be imposed only when:

(1) There exists adequate evidence of one or more of the causes set out in §32.405, and

(2) Immediate action is necessary to protect the public interest.

(c) In assessing the adequacy of the evidence, the agency should consider how much information is available, how credible it is given the circumstances, whether or not important allegations are corroborated, and what inferences can reasonably be drawn as a result. This assessment should include an examination of basic documents such as grants, cooperative agreements, loan authorizations, and contracts.

§32.405 Causes for suspension.

(a) Suspension may be imposed in accordance with the provisions of §§32.400 through 32.413 upon adequate evidence:

(1) To suspect the commission of an offense listed in §32.305(a); or

(2) That a cause for debarment under §32.305 may exist.

(b) Indictment shall constitute adequate evidence for purposes of suspension actions.

§32.410 Procedures.

(a) *Investigation and referral.* Information concerning the existence of a cause for suspension from any source shall be promptly reported, investigated, and referred, when appropriate, to the suspending official for consideration. After consideration, the

suspending official may issue a notice of suspension.

(b) *Decisionmaking process.* EPA shall process suspension actions as informally as practicable, consistent with principles of fundamental fairness, using the procedures in § 32.411 through § 32.413.

§ 32.411 Notice of suspension.

When a respondent is suspended, notice shall immediately be given:

(a) That suspension has been imposed;

(b) That the suspension is based on an indictment, conviction, or other adequate evidence that the respondent has committed irregularities seriously reflecting on the propriety of further Federal Government dealings with the respondent;

(c) Describing any such irregularities in terms sufficient to put the respondent on notice without disclosing the Federal Government's evidence;

(d) Of the cause(s) relied upon under § 32.405 for imposing suspension;

(e) That the suspension is for a temporary period pending the completion of an investigation or ensuing legal, debarment, or Program Fraud Civil Remedies Act proceedings;

(f) Of the provisions of § 32.411 through § 32.413 and any other EPA procedures, if applicable, governing suspension decisionmaking; and

(g) Of the effect of the suspension.

§ 32.412 Opportunity to contest suspension.

(a) *Submission in opposition.* Within 30 days after receipt of the notice of suspension, the respondent may submit, in person, in writing, or through a representative, information and argument in opposition to the suspension.

(1) If the respondent desires a hearing, it shall submit a written request to the suspending official within the 30-day period following receipt of the notice of suspension.

(2) [Reserved]

(b) *Additional proceedings as to disputed material facts.* (1) If the suspending official finds that the respondent's submission in opposition raises a genuine dispute over facts material to the suspension, respondent(s) shall be afforded an opportunity to appear with a representative, submit documentary evidence, present witnesses, and confront any witness the agency presents, unless:

(i) The action is based on an indictment, conviction or civil judgment, or

(ii) A determination is made, on the basis of Department of Justice advice, that the substantial interests of the Federal Government in pending or contemplated legal proceedings based on the same facts as the suspension would be prejudiced.

(2) A transcribed record of any additional proceedings shall be prepared and made available at cost to the respondent, upon request, unless the respondent and the agency, by mutual agreement, waive the requirement for a transcript.

[53 FR 19196, 19204, May 26, 1988, as amended at 53 FR 19197, May 26, 1988]

§ 32.413 Suspending official's decision.

The suspending official may modify or terminate the suspension (for example, see § 32.320(c) for reasons for reducing the period or scope of debarment) or may leave it in force. However, a decision to modify or terminate the suspension shall be without prejudice to the subsequent imposition of suspension by any other agency or debarment by any agency. The decision shall be rendered in accordance with the following provisions:

(a) *No additional proceedings necessary.* In actions: based on an indictment, conviction, or civil judgment; in which there is no genuine dispute over material facts; or in which additional proceedings to determine disputed material facts have been denied on the basis of Department of Justice advice, the suspending official shall make a decision on the basis of all the information in the administrative record, including any submission made by the respondent. The decision shall be made within 45 days after receipt of any information and argument submitted by the respondent, unless the suspending official extends this period for good cause.

(b) *Additional proceedings necessary.* (1) In actions in which additional proceedings are necessary to determine disputed material facts, written findings of fact shall be prepared. The suspending official shall base the decision

on the facts as found, together with any information and argument submitted by the respondent and any other information in the administrative record.

(2) The suspending official may refer matters involving disputed material facts to another official for findings of fact. The suspending official may reject any such findings, in whole or in part, only after specifically determining them to be arbitrary or capricious or clearly erroneous.

(c) *Notice of suspending official's decision.* Prompt written notice of the suspending official's decision shall be sent to the respondent.

§32.415 Period of suspension.

(a) Suspension shall be for a temporary period pending the completion of an investigation or ensuing legal, debarment, or Program Fraud Civil Remedies Act proceedings, unless terminated sooner by the suspending official or as provided in paragraph (b) of this section.

(b) If legal or administrative proceedings are not initiated within 12 months after the date of the suspension notice, the suspension shall be terminated unless an Assistant Attorney General or United States Attorney requests its extension in writing, in which case it may be extended for an additional six months. In no event may a suspension extend beyond 18 months, unless such proceedings have been initiated within that period.

(c) The suspending official shall notify the Department of Justice of an impending termination of a suspension, at least 30 days before the 12-month period expires, to give that Department an opportunity to request an extension.

§32.420 Scope of suspension.

The scope of a suspension is the same as the scope of a debarment (see §32.325), except that the procedures of §§32.410 through 32.413 shall be used in imposing a suspension.

§32.430 Appeal.

(a) The suspension determination under §32.413 shall be final. However, any party to the action may request the Assistant Administrator for Administration and Resources Management (Assistant Administrator), to review the findings of the suspending official by filing a request with the Assistant Administrator within 30 calendar days of the party's receipt of the suspension determination, or its reconsideration. The request must be in writing and set forth the specific reasons why relief should be granted.

(b) A review under this section shall be at the discretion of the Assistant Administrator. If a review is granted, the suspending official may stay the effective date of a suspension order pending resolution of appeal. If a suspension is stayed, the stay shall be automatically lifted if the Assistant Administrator affirms the suspension.

(c) The review shall be based solely upon the record. The Assistant Administrator may set aside a determination only if it is found to be arbitrary, capricious, an abuse of discretion, or based upon a clear error of law.

(d) The Assistant Administrator's subsequent determination shall be in writing and mailed to all parties.

(e) A determination under §32.413 or a review under this section shall not be subject to a dispute or a bid protest under parts 30, 31, or 33 of this subchapter.

[53 FR 19197, May 26, 1988, as amended at 59 FR 50693, Oct. 5, 1994]

Subpart E—Responsibilities of GSA, Agency and Participants

§32.500 GSA responsibilities.

(a) In accordance with the OMB guidelines, GSA shall compile, maintain, and distribute a list of all persons who have been debarred, suspended, or voluntarily excluded by agencies under Executive Order 12549 and these regulations, and those who have been determined to be ineligible.

(b) At a minimum, this list shall indicate:

(1) The names and addresses of all debarred, suspended, ineligible, and voluntarily excluded persons, in alphabetical order, with cross-references when more than one name is involved in a single action;

(2) The type of action;

(3) The cause for the action;

(4) The scope of the action;

(5) Any termination date for each listing; and

(6) The agency and name and telephone number of the agency point of contact for the action.

§ 32.505 EPA responsibilities.

(a) The agency shall provide GSA with current information concerning debarments, suspension, determinations of ineligibility, and voluntary exclusions it has taken. Until February 18, 1989, the agency shall also provide GSA and OMB with information concerning all transactions in which EPA has granted exceptions under § 32.215 permitting participation by debarred, suspended, or voluntarily excluded persons.

(b) Unless an alternative schedule is agreed to by GSA, the agency shall advise GSA of the information set forth in § 32.500(b) and of the exceptions granted under § 32.215 within five working days after taking such actions.

(c) The agency shall direct inquiries concerning listed persons to the agency that took the action.

(d) Agency officials shall check the Nonprocurement List before entering covered transactions to determine whether a participant in a primary transaction is debarred, suspended, ineligible, or voluntarily excluded (Tel. #).

(e) Agency officials shall check the Nonprocurement List before approving principals or lower tier participants where agency approval of the principal or lower tier participant is required under the terms of the transaction, to determine whether such principals or participants are debarred, suspended, ineligible, or voluntarily excluded.

§ 32.510 Participants' responsibilities.

(a) *Certification by participants in primary covered transactions.* Each participant shall submit the certification in Appendix A to this part for it and its principals at the time the participant submits its proposal in connection with a primary covered transaction, except that States need only complete such certification as to their principals. Participants may decide the method and frequency by which they determine the eligibility of their principals. In addition, each participant may, but is not required to, check the Nonprocurement List for its principals (Tel. #). Adverse information on the certification will not necessarily result in denial of participation. However, the certification, and any additional information pertaining to the certification submitted by the participant, shall be considered in the administration of covered transactions.

(b) *Certification by participants in lower tier covered transactions.* (1) Each participant shall require participants in lower tier covered transactions to include the certification in Appendix B to this part for it and its principals in any proposal submitted in connection with such lower tier covered transactions.

(2) A participant may rely upon the certification of a prospective participant in a lower tier covered transaction that it and its principals are not debarred, suspended, ineligible, or voluntarily excluded from the covered transaction by any Federal agency, unless it knows that the certification is erroneous. Participants may decide the method and frequency by which they determine the eligiblity of their principals. In addition, a participant may, but is not required to, check the Nonprocurement List for its principals and for participants (Tel. #).

(c) *Changed circumstances regarding certification.* A participant shall provide immediate written notice to EPA if at any time the participant learns that its certification was erroneous when submitted or has become erroneous by reason of changed circumstances. Participants in lower tier covered transactions shall provide the same updated notice to the participant to which it submitted its proposals.

Subpart F—Drug-Free Workplace Requirements (Grants)

SOURCE: 55 FR 21688, 21701, May 25, 1990, unless otherwise noted.

§ 32.600 Purpose.

(a) The purpose of this subpart is to carry out the Drug-Free Workplace Act of 1988 by requiring that—

(1) A grantee, other than an individual, shall certify to the agency that it will provide a drug-free workplace;

(2) A grantee who is an individual shall certify to the agency that, as a condition of the grant, he or she will not engage in the unlawful manufacture, distribution, dispensing, possession or use of a controlled substance in conducting any activity with the grant.

(b) Requirements implementing the Drug-Free Workplace Act of 1988 for contractors with the agency are found at 48 CFR subparts 9.4, 23.5, and 52.2.

§32.605 Definitions.

(a) Except as amended in this section, the definitions of §32.105 apply to this subpart.

(b) For purposes of this subpart—

(1) *Controlled substance* means a controlled substance in schedules I through V of the Controlled Substances Act (21 U.S.C. 812), and as further defined by regulation at 21 CFR 1308.11 through 1308.15;

(2) *Conviction* means a finding of guilt (including a plea of nolo contendere) or imposition of sentence, or both, by any judicial body charged with the responsibility to determine violations of the Federal or State criminal drug statutes;

(3) *Criminal drug statute* means a Federal or non-Federal criminal statute involving the manufacture, distribution, dispensing, use, or possession of any controlled substance;

(4) *Drug-free workplace* means a site for the performance of work done in connection with a specific grant at which employees of the grantee are prohibited from engaging in the unlawful manufacture, distribution, dispensing, possession, or use of a controlled substance;

(5) *Employee* means the employee of a grantee directly engaged in the performance of work under the grant, including:

(i) All *direct charge* employees;

(ii) All *indirect charge* employees, unless their impact or involvement is insignificant to the performance of the grant; and,

(iii) Temporary personnel and consultants who are directly engaged in the performance of work under the grant and who are on the grantee's payroll.

This definition does not include workers not on the payroll of the grantee (e.g., volunteers, even if used to meet a matching requirement; consultants or independent contractors not on the payroll; or employees of subrecipients or subcontractors in covered workplaces);

(6) *Federal agency* or *agency* means any United States executive department, military department, government corporation, government controlled corporation, any other establishment in the executive branch (including the Executive Office of the President), or any independent regulatory agency;

(7) *Grant* means an award of financial assistance, including a cooperative agreement, in the form of money, or property in lieu of money, by a Federal agency directly to a grantee. The term grant includes block grant and entitlement grant programs, whether or not exempted from coverage under the grants management government-wide common rule on uniform administrative requirements for grants and cooperative agreements. The term does not include technical assistance that provides services instead of money, or other assistance in the form of loans, loan guarantees, interest subsidies, insurance, or direct appropriations; or any veterans' benefits to individuals, i.e., any benefit to veterans, their families, or survivors by virtue of the service of a veteran in the Armed Forces of the United States;

(8) *Grantee* means a person who applies for or receives a grant directly from a Federal agency (except another Federal agency);

(9) *Individual* means a natural person;

(10) *State* means any of the States of the United States, the District of Columbia, the Commonwealth of Puerto Rico, any territory or possession of the United States, or any agency of a State, exclusive of institutions of higher education, hospitals, and units of local government. A State instrumentality will be considered part of the State government if it has a written determination from a State government that such State considers the instrumentality to be an agency of the State government.

§ 32.610 Coverage.

(a) This subpart applies to any grantee of the agency.

(b) This subpart applies to any grant, except where application of this subpart would be inconsistent with the international obligations of the United States or the laws or regulations of a foreign government. A determination of such inconsistency may be made only by the agency head or his/her designee.

(c) The provisions of subparts A, B, C, D and E of this part apply to matters covered by this subpart, except where specifically modified by this subpart. In the event of any conflict between provisions of this subpart and other provisions of this part, the provisions of this subpart are deemed to control with respect to the implementation of drug-free workplace requirements concerning grants.

§ 32.615 Grounds for suspension of payments, suspension or termination of grants, or suspension or debarment.

A grantee shall be deemed in violation of the requirements of this subpart if the agency head or his or her official designee determines, in writing, that—

(a) The grantee has made a false certification under § 32.630;

(b) With respect to a grantee other than an individual—

(1) The grantee has violated the certification by failing to carry out the requirements of paragraphs (A)(a)–(g) and/or (B) of the certification (Alternate I to appendix C) or

(2) Such a number of employees of the grantee have been convicted of violations of criminal drug statutes for violations occurring in the workplace as to indicate that the grantee has failed to make a good faith effort to provide a drug-free workplace.

(c) With respect to a grantee who is an individual—

(1) The grantee has violated the certification by failing to carry out its requirements (Alternate II to appendix C); or

(2) The grantee is convicted of a criminal drug offense resulting from a violation occurring during the conduct of any grant activity.

§ 32.620 Effect of violation.

(a) In the event of a violation of this subpart as provided in § 32.615, and in accordance with applicable law, the grantee shall be subject to one or more of the following actions:

(1) Suspension of payments under the grant;

(2) Suspension or termination of the grant; and

(3) Suspension or debarment of the grantee under the provisions of this part.

(b) Upon issuance of any final decision under this part requiring debarment of a grantee, the debarred grantee shall be ineligible for award of any grant from any Federal agency for a period specified in the decision, not to exceed five years (*see* § 32.320(a)(2) of this part).

§ 32.625 Exception provision.

The agency head may waive with respect to a particular grant, in writing, a suspension of payments under a grant, suspension or termination of a grant, or suspension or debarment of a grantee if the agency head determines that such a waiver would be in the public interest. This exception authority cannot be delegated to any other official.

§ 32.630 Certification requirements and procedures.

(a)(1) As a prior condition of being awarded a grant, each grantee shall make the appropriate certification to the Federal agency providing the grant, as provided in Appendix C to this part.

(2) Grantees are not required to make a certification in order to continue receiving funds under a grant awarded before March 18, 1989, or under a no-cost time extension of such a grant. However, the grantee shall make a one-time drug-free workplace certification for a non-automatic continuation of such a grant made on or after March 18, 1989.

(b) Except as provided in this section, all grantees shall make the required certification for each grant. For mandatory formula grants and entitlements that have no application process, grantees shall submit a one-time

certification in order to continue receiving awards.

(c) A grantee that is a State may elect to make one certification in each Federal fiscal year. States that previously submitted an annual certification are not required to make a certification for Fiscal Year 1990 until June 30, 1990. Except as provided in paragraph (d) of this section, this certification shall cover all grants to all State agencies from any Federal agency. The State shall retain the original of this statewide certification in its Governor's office and, prior to grant award, shall ensure that a copy is submitted individually with respect to each grant, unless the Federal agency has designated a central location for submission.

(d)(1) The Governor of a State may exclude certain State agencies from the statewide certification and authorize these agencies to submit their own certifications to Federal agencies. The statewide certification shall name any State agencies so excluded.

(2) A State agency to which the statewide certification does not apply, or a State agency in a State that does not have a statewide certification, may elect to make one certification in each Federal fiscal year. State agencies that previously submitted a State agency certification are not required to make a certification for Fiscal Year 1990 until June 30, 1990. The State agency shall retain the original of this State agency-wide certification in its central office and, prior to grant award, shall ensure that a copy is submitted individually with respect to each grant, unless the Federal agency designates a central location for submission.

(3) When the work of a grant is done by more than one State agency, the certification of the State agency directly receiving the grant shall be deemed to certify compliance for all workplaces, including those located in other State agencies.

(e)(1) For a grant of less than 30 days performance duration, grantees shall have this policy statement and program in place as soon as possible, but in any case by a date prior to the date on which performance is expected to be completed.

(2) For a grant of 30 days or more performance duration, grantees shall have this policy statement and program in place within 30 days after award.

(3) Where extraordinary circumstances warrant for a specific grant, the grant officer may determine a different date on which the policy statement and program shall be in place.

§ 32.635 Reporting of and employee sanctions for convictions of criminal drug offenses.

(a) When a grantee other than an individual is notified that an employee has been convicted for a violation of a criminal drug statute occurring in the workplace, it shall take the following actions:

(1) Within 10 calendar days of receiving notice of the conviction, the grantee shall provide written notice, including the convicted employee's position title, to every grant officer, or other designee on whose grant activity the convicted employee was working, unless a Federal agency has designated a central point for the receipt of such notifications. Notification shall include the identification number(s) for each of the Federal agency's affected grants.

(2) Within 30 calendar days of receiving notice of the conviction, the grantee shall do the following with respect to the employee who was convicted.

(i) Take appropriate personnel action against the employee, up to and including termination, consistent with requirements of the Rehabilitation Act of 1973, as amended; or

(ii) Require the employee to participate satisfactorily in a drug abuse assistance or rehabilitation program approved for such purposes by a Federal, State, or local health, law enforcement, or other appropriate agency.

(b) A grantee who is an individual who is convicted for a violation of a criminal drug statute occurring during the conduct of any grant activity shall report the conviction, in writing, within 10 calendar days, to his or her Federal agency grant officer, or other designee, unless the Federal agency has designated a central point for the receipt of such notices. Notification shall include the identification number(s)

for each of the Federal agency's affected grants.

(Approved by the Office of Management and Budget under control number 0991–0002)

APPENDIX A TO PART 32—CERTIFICATION REGARDING DEBARMENT, SUSPENSION, AND OTHER RESPONSIBILITY MATTERS—PRIMARY COVERED TRANSACTIONS

Instructions for Certification

1. By signing and submitting this proposal, the prospective primary participant is providing the certification set out below.

2. The inability of a person to provide the certification required below will not necessarily result in denial of participation in this covered transaction. The prospective participant shall submit an explanation of why it cannot provide the certification set out below. The certification or explanation will be considered in connection with the department or agency's determination whether to enter into this transaction. However, failure of the prospective primary participant to furnish a certification or an explanation shall disqualify such person from participation in this transaction.

3. The certification in this clause is a material representation of fact upon which reliance was placed when the department or agency determined to enter into this transaction. If it is later determined that the prospective primary participant knowingly rendered an erroneous certification, in addition to other remedies available to the Federal Government, the department or agency may terminate this transaction for cause or default.

4. The prospective primary participant shall provide immediate written notice to the department or agency to which this proposal is submitted if at any time the prospective primary participant learns that its certification was erroneous when submitted or has become erroneous by reason of changed circumstances.

5. The terms *covered transaction, debarred, suspended, ineligible, lower tier covered transaction, participant, person, primary covered transaction, principal, proposal, and voluntarily excluded*, as used in this clause, have the meanings set out in the Definitions and Coverage sections of the rules implementing Executive Order 12549. You may contact the department or agency to which this proposal is being submitted for assistance in obtaining a copy of those regulations.

6. The prospective primary participant agrees by submitting this proposal that, should the proposed covered transaction be entered into, it shall not knowingly enter into any lower tier covered transaction with a person who is proposed for debarment under 48 CFR part 9, subpart 9.4, debarred, suspended, declared ineligible, or voluntarily excluded from participation in this covered transaction, unless authorized by the department or agency entering into this transaction.

7. The prospective primary participant further agrees by submitting this proposal that it will include the clause titled ''Certification Regarding Debarment, Suspension, Ineligibility and Voluntary Exclusion-Lower Tier Covered Transaction,'' provided by the department or agency entering into this covered transaction, without modification, in all lower tier covered transactions and in all solicitations for lower tier covered transactions.

8. A participant in a covered transaction may rely upon a certification of a prospective participant in a lower tier covered transaction that it is not proposed for debarment under 48 CFR part 9, subpart 9.4, debarred, suspended, ineligible, or voluntarily excluded from the covered transaction, unless it knows that the certification is erroneous. A participant may decide the method and frequency by which it determines the eligibility of its principals. Each participant may, but is not required to, check the List of Parties Excluded from Federal Procurement and Nonprocurement Programs.

9. Nothing contained in the foregoing shall be construed to require establishment of a system of records in order to render in good faith the certification required by this clause. The knowledge and information of a participant is not required to exceed that which is normally possessed by a prudent person in the ordinary course of business dealings.

10. Except for transactions authorized under paragraph 6 of these instructions, if a participant in a covered transaction knowingly enters into a lower tier covered transaction with a person who is proposed for debarment under 48 CFR part 9, subpart 9.4, suspended, debarred, ineligible, or voluntarily excluded from participation in this transaction, in addition to other remedies available to the Federal Government, the department or agency may terminate this transaction for cause or default.

Certification Regarding Debarment, Suspension, and Other Responsibility Matters—Primary Covered Transactions

(1) The prospective primary participant certifies to the best of its knowledge and belief, that it and its principals:

(a) Are not presently debarred, suspended, proposed for debarment, declared ineligible, or voluntarily excluded by any Federal department or agency;

(b) Have not within a three-year period preceding this proposal been convicted of or had a civil judgment rendered against them

for commission of fraud or a criminal offense in connection with obtaining, attempting to obtain, or performing a public (Federal, State or local) transaction or contract under a public transaction; violation of Federal or State antitrust statutes or commission of embezzlement, theft, forgery, bribery, falsification or destruction of records, making false statements, or receiving stolen property;

(c) Are not presently indicted for or otherwise criminally or civilly charged by a governmental entity (Federal, State or local) with commission of any of the offenses enumerated in paragraph (1)(b) of this certification; and

(d) Have not within a three-year period preceding this application/proposal had one or more public transactions (Federal, State or local) terminated for cause or default.

(2) Where the prospective primary participant is unable to certify to any of the statements in this certification, such prospective participant shall attach an explanation to this proposal.

[60 FR 33042, 33059, June 26, 1995]

APPENDIX B TO PART 32—CERTIFICATION REGARDING DEBARMENT, SUSPENSION, INELIGIBILITY AND VOLUNTARY EXCLUSION—LOWER TIER COVERED TRANSACTIONS

Instructions for Certification

1. By signing and submitting this proposal, the prospective lower tier participant is providing the certification set out below.

2. The certification in this clause is a material representation of fact upon which reliance was placed when this transaction was entered into. If it is later determined that the prospective lower tier participant knowingly rendered an erroneous certification, in addition to other remedies available to the Federal Government the department or agency with which this transaction originated may pursue available remedies, including suspension and/or debarment.

3. The prospective lower tier participant shall provide immediate written notice to the person to which this proposal is submitted if at any time the prospective lower tier participant learns that its certification was erroneous when submitted or had become erroneous by reason of changed circumstances.

4. The terms *covered transaction, debarred, suspended, ineligible, lower tier covered transaction, participant, person, primary covered transaction, principal, proposal,* and *voluntarily excluded,* as used in this clause, have the meaning set out in the Definitions and Coverage sections of rules implementing Executive Order 12549. You may contact the person to which this proposal is submitted for assistance in obtaining a copy of those regulations.

5. The prospective lower tier participant agrees by submitting this proposal that, should the proposed covered transaction be entered into, it shall not knowingly enter into any lower tier covered transaction with a person who is proposed for debarment under 48 CFR part 9, subpart 9.4, debarred, suspended, declared ineligible, or voluntarily excluded from participation in this covered transaction, unless authorized by the department or agency with which this transaction originated.

6. The prospective lower tier participant further agrees by submitting this proposal that it will include this clause titled ''Certification Regarding Debarment, Suspension, Ineligibility and Voluntary Exclusion-Lower Tier Covered Transaction,'' without modification, in all lower tier covered transactions and in all solicitations for lower tier covered transactions.

7. A participant in a covered transaction may rely upon a certification of a prospective participant in a lower tier covered transaction that it is not proposed for debarment under 48 CFR part 9, subpart 9.4, debarred, suspended, ineligible, or voluntarily excluded from covered transactions, unless it knows that the certification is erroneous. A participant may decide the method and frequency by which it determines the eligibility of its principals. Each participant may, but is not required to, check the List of Parties Excluded from Federal Procurement and Nonprocurement Programs.

8. Nothing contained in the foregoing shall be construed to require establishment of a system of records in order to render in good faith the certification required by this clause. The knowledge and information of a participant is not required to exceed that which is normally possessed by a prudent person in the ordinary course of business dealings.

9. Except for transactions authorized under paragraph 5 of these instructions, if a participant in a covered transaction knowingly enters into a lower tier covered transaction with a person who is proposed for debarment under 48 CFR part 9, subpart 9.4, suspended, debarred, ineligible, or voluntarily excluded from participation in this transaction, in addition to other remedies available to the Federal Government, the department or agency with which this transaction originated may pursue available remedies, including suspension and/or debarment.

Certification Regarding Debarment, Suspension, Ineligibility an Voluntary Exclusion—Lower Tier Covered Transactions

(1) The prospective lower tier participant certifies, by submission of this proposal, that neither it nor its principals is presently debarred, suspended, proposed for debarment, declared ineligible, or voluntarily excluded

from participation in this transaction by any Federal department or agency.

(2) Where the prospective lower tier participant is unable to certify to any of the statements in this certification, such prospective participant shall attach an explanation to this proposal.

[60 FR 33042, 33059, June 26, 1995]

APPENDIX C TO PART 32—CERTIFICATION REGARDING DRUG-FREE WORKPLACE REQUIREMENTS

Instructions for Certification

1. By signing and/or submitting this application or grant agreement, the grantee is providing the certification set out below.

2. The certification set out below is a material representation of fact upon which reliance is placed when the agency awards the grant. If it is later determined that the grantee knowingly rendered a false certification, or otherwise violates the requirements of the Drug-Free Workplace Act, the agency, in addition to any other remedies available to the Federal Government, may take action authorized under the Drug-Free Workplace Act.

3. For grantees other than individuals, Alternate I applies.

4. For grantees who are individuals, Alternate II applies.

5. Workplaces under grants, for grantees other than individuals, need not be identified on the certification. If known, they may be identified in the grant application. If the grantee does not identify the workplaces at the time of application, or upon award, if there is no application, the grantee must keep the identity of the workplace(s) on file in its office and make the information available for Federal inspection. Failure to identify all known workplaces constitutes a violation of the grantee's drug-free workplace requirements.

6. Workplace identifications must include the actual address of buildings (or parts of buildings) or other sites where work under the grant takes place. Categorical descriptions may be used (e.g., all vehicles of a mass transit authority or State highway department while in operation, State employees in each local unemployment office, performers in concert halls or radio studios).

7. If the workplace identified to the agency changes during the performance of the grant, the grantee shall inform the agency of the change(s), if it previously identified the workplaces in question (see paragraph five).

8. Definitions of terms in the Nonprocurement Suspension and Debarment common rule and Drug-Free Workplace common rule apply to this certification. Grantees' attention is called, in particular, to the following definitions from these rules:

Controlled substance means a controlled substance in Schedules I through V of the Controlled Substances Act (21 U.S.C. 812) and as further defined by regulation (21 CFR 1308.11 through 1308.15);

Conviction means a finding of guilt (including a plea of nolo contendere) or imposition of sentence, or both, by any judicial body charged with the responsibility to determine violations of the Federal or State criminal drug statutes;

Criminal drug statute means a Federal or non-Federal criminal statute involving the manufacture, distribution, dispensing, use, or possession of any controlled substance;

Employee means the employee of a grantee directly engaged in the performance of work under a grant, including: (i) All *direct charge* employees; (ii) All *indirect charge* employees unless their impact or involvement is insignificant to the performance of the grant; and, (iii) Temporary personnel and consultants who are directly engaged in the performance of work under the grant and who are on the grantee's payroll. This definition does not include workers not on the payroll of the grantee (e.g., volunteers, even if used to meet a matching requirement; consultants or independent contractors not on the grantee's payroll; or employees of subrecipients or subcontractors in covered workplaces).

Certification Regarding Drug-Free Workplace Requirements

Alternate I. (Grantees Other Than Individuals)

A. The grantee certifies that it will or will continue to provide a drug-free workplace by:

(a) Publishing a statement notifying employees that the unlawful manufacture, distribution, dispensing, possession, or use of a controlled substance is prohibited in the grantee's workplace and specifying the actions that will be taken against employees for violation of such prohibition;

(b) Establishing an ongoing drug-free awareness program to inform employees about—

(1) The dangers of drug abuse in the workplace;

(2) The grantee's policy of maintaining a drug-free workplace;

(3) Any available drug counseling, rehabilitation, and employee assistance programs; and

(4) The penalties that may be imposed upon employees for drug abuse violations occurring in the workplace;

(c) Making it a requirement that each employee to be engaged in the performance of the grant be given a copy of the statement required by paragraph (a);

(d) Notifying the employee in the statement required by paragraph (a) that, as a

condition of employment under the grant, the employee will—

(1) Abide by the terms of the statement; and

(2) Notify the employer in writing of his or her conviction for a violation of a criminal drug statute occurring in the workplace no later than five calendar days after such conviction;

(e) Notifying the agency in writing, within ten calendar days after receiving notice under paragraph (d)(2) from an employee or otherwise receiving actual notice of such conviction. Employers of convicted employees must provide notice, including position title, to every grant officer or other designee on whose grant activity the convicted employee was working, unless the Federal agency has designated a central point for the receipt of such notices. Notice shall include the identification number(s) of each affected grant;

(f) Taking one of the following actions, within 30 calendar days of receiving notice under paragraph (d)(2), with respect to any employee who is so convicted—

(1) Taking appropriate personnel action against such an employee, up to and including termination, consistent with the requirements of the Rehabilitation Act of 1973, as amended; or

(2) Requiring such employee to participate satisfactorily in a drug abuse assistance or rehabilitation program approved for such purposes by a Federal, State, or local health, law enforcement, or other appropriate agency;

(g) Making a good faith effort to continue to maintain a drug-free workplace through implementation of paragraphs (a), (b), (c), (d), (e) and (f).

B. The grantee may insert in the space provided below the site(s) for the performance of work done in connection with the specific grant:

Place of Performance (Street address, city, county, state, zip code)

_____

_____

_____

Check ☐ if there are workplaces on file that are not identified here.

Alternate II. (Grantees Who Are Individuals)

(a) The grantee certifies that, as a condition of the grant, he or she will not engage in the unlawful manufacture, distribution, dispensing, possession, or use of a controlled substance in conducting any activity with the grant;

(b) If convicted of a criminal drug offense resulting from a violation occurring during the conduct of any grant activity, he or she will report the conviction, in writing, within 10 calendar days of the conviction, to every grant officer or other designee, unless the Federal agency designates a central point for the receipt of such notices. When notice is made to such a central point, it shall include the identification number(s) of each affected grant.

[55 FR 21690, 21701, May 25, 1990]

PART 34—NEW RESTRICTIONS ON LOBBYING

Subpart A—General

Sec.
34.100 Conditions on use of funds.
34.105 Definitions.
34.110 Certification and disclosure.

Subpart B—Activities by Own Employees

34.200 Agency and legislative liaison.
34.205 Professional and technical services.
34.210 Reporting.

Subpart C—Activities by Other Than Own Employees

34.300 Professional and technical services.

Subpart D—Penalties and Enforcement

34.400 Penalties.
34.405 Penalty procedures.
34.410 Enforcement.

Subpart E—Exemptions

34.500 Secretary of Defense.

Subpart F—Agency Reports

34.600 Semi-annual compilation.
34.605 Inspector General report.
APPENDIX A TO PART 34—CERTIFICATION REGARDING LOBBYING
APPENDIX B TO PART 34—DISCLOSURE FORM TO REPORT LOBBYING

AUTHORITY: Section 319; Pub. L. 101–121 (31 U.S.C. 1352); 33 U.S.C. 1251 *et seq.*; 42 U.S.C. 7401 *et seq.*; 42 U.S.C. 6901 *et seq.*; 42 U.S.C. 300f *et seq.*; 7 U.S.C. 136 *et seq.*; 15 U.S.C. 2601 *et seq.*; 42 U.S.C. 9601 *et seq.*; 20 U.S.C. 4011 *et seq.*; 33 U.S.C. 1401 *et seq.*

SOURCE: 55 FR 6737 and 6753, Feb. 26, 1990 (interim), unless otherwise noted.

CROSS REFERENCE: See also Office of Management and Budget notice published at 54 FR 52306, December 20, 1989.

Subpart A—General

§34.100 Conditions on use of funds.

(a) No appropriated funds may be expended by the recipient of a Federal contract, grant, loan, or cooperative

agreement to pay any person for influencing or attempting to influence an officer or employee of any agency, a Member of Congress, an officer or employee of Congress, or an employee of a Member of Congress in connection with any of the following covered Federal actions: the awarding of any Federal contract, the making of any Federal grant, the making of any Federal loan, the entering into of any cooperative agreement, and the extension, continuation, renewal, amendment, or modification of any Federal contract, grant, loan, or cooperative agreement.

(b) Each person who requests or receives from an agency a Federal contract, grant, loan, or cooperative agreement shall file with that agency a certification, set forth in appendix A, that the person has not made, and will not make, any payment prohibited by paragraph (a) of this section.

(c) Each person who requests or receives from an agency a Federal contract, grant, loan, or a cooperative agreement shall file with that agency a disclosure form, set forth in appendix B, if such person has made or has agreed to make any payment using nonappropriated funds (to include profits from any covered Federal action), which would be prohibited under paragraph (a) of this section if paid for with appropriated funds.

(d) Each person who requests or receives from an agency a commitment providing for the United States to insure or guarantee a loan shall file with that agency a statement, set forth in appendix A, whether that person has made or has agreed to make any payment to influence or attempt to influence an officer or employee of any agency, a Member of Congress, an officer or employee of Congress, or an employee of a Member of Congress in connection with that loan insurance or guarantee.

(e) Each person who requests or receives from an agency a commitment providing for the United States to insure or guarantee a loan shall file with that agency a disclosure form, set forth in appendix B, if that person has made or has agreed to make any payment to influence or attempt to influence an officer or employee of any agency, a Member of Congress, an officer or employee of Congress, or an employee of a Member of Congress in connection with that loan insurance or guarantee.

§ 34.105 Definitions.

For purposes of this part:

(a) *Agency*, as defined in 5 U.S.C. 552(f), includes Federal executive departments and agencies as well as independent regulatory commissions and Government corporations, as defined in 31 U.S.C. 9101(1).

(b) *Covered Federal action* means any of the following Federal actions:

(1) The awarding of any Federal contract;

(2) The making of any Federal grant;

(3) The making of any Federal loan;

(4) The entering into of any cooperative agreement; and,

(5) The extension, continuation, renewal, amendment, or modification of any Federal contract, grant, loan, or cooperative agreement.

Covered Federal action does not include receiving from an agency a commitment providing for the United States to insure or guarantee a loan. Loan guarantees and loan insurance are addressed independently within this part.

(c) *Federal contract* means an acquisition contract awarded by an agency, including those subject to the Federal Acquisition Regulation (FAR), and any other acquisition contract for real or personal property or services not subject to the FAR.

(d) *Federal cooperative agreement* means a cooperative agreement entered into by an agency.

(e) *Federal grant* means an award of financial assistance in the form of money, or property in lieu of money, by the Federal Government or a direct appropriation made by law to any person. The term does not include technical assistance which provides services instead of money, or other assistance in the form of revenue sharing, loans, loan guarantees, loan insurance, interest subsidies, insurance, or direct United States cash assistance to an individual.

(f) *Federal loan* means a loan made by an agency. The term does not include loan guarantee or loan insurance.

(g) *Indian tribe* and *tribal organization* have the meaning provided in section 4

of the Indian Self-Determination and Education Assistance Act (25 U.S.C. 450B). Alaskan Natives are included under the definitions of Indian tribes in that Act.

(h) *Influencing or attempting to influence* means making, with the intent to influence, any communication to or appearance before an officer or employee or any agency, a Member of Congress, an officer or employee of Congress, or an employee of a Member of Congress in connection with any covered Federal action.

(i) *Loan guarantee* and *loan insurance* means an agency's guarantee or insurance of a loan made by a person.

(j) *Local government* means a unit of government in a State and, if chartered, established, or otherwise recognized by a State for the performance of a governmental duty, including a local public authority, a special district, an intrastate district, a council of governments, a sponsor group representative organization, and any other instrumentality of a local government.

(k) *Officer or employee of an agency* includes the following individuals who are employed by an agency:

(1) An individual who is appointed to a position in the Government under title 5, U.S. Code, including a position under a temporary appointment;

(2) A member of the uniformed services as defined in section 101(3), title 37, U.S. Code;

(3) A special Government employee as defined in section 202, title 18, U.S. Code; and,

(4) An individual who is a member of a Federal advisory committee, as defined by the Federal Advisory Committee Act, title 5, U.S. Code appendix 2.

(l) *Person* means an individual, corporation, company, association, authority, firm, partnership, society, State, and local government, regardless of whether such entity is operated for profit or not for profit. This term excludes an Indian tribe, tribal organization, or any other Indian organization with respect to expenditures specifically permitted by other Federal law.

(m) *Reasonable compensation* means, with respect to a regularly employed officer or employee of any person, compensation that is consistent with the normal compensation for such officer or employee for work that is not furnished to, not funded by, or not furnished in cooperation with the Federal Government.

(n) *Reasonable payment* means, with respect to professional and other technical services, a payment in an amount that is consistent with the amount normally paid for such services in the private sector.

(o) *Recipient* includes all contractors, subcontractors at any tier, and subgrantees at any tier of the recipient of funds received in connection with a Federal contract, grant, loan, or cooperative agreement. The term excludes an Indian tribe, tribal organization, or any other Indian organization with respect to expenditures specifically permitted by other Federal law.

(p) *Regularly employed* means, with respect to an officer or employee of a person requesting or receiving a Federal contract, grant, loan, or cooperative agreement or a commitment providing for the United States to insure or guarantee a loan, an officer or employee who is employed by such person for at least 130 working days within one year immediately preceding the date of the submission that initiates agency consideration of such person for receipt of such contract, grant, loan, cooperative agreement, loan insurance commitment, or loan guarantee commitment. An officer or employee who is employed by such person for less than 130 working days within one year immediately preceding the date of the submission that initiates agency consideration of such person shall be considered to be regularly employed as soon as he or she is employed by such person for 130 working days.

(q) *State* means a State of the United States, the District of Columbia, the Commonwealth of Puerto Rico, a territory or possession of the United States, an agency or instrumentality of a State, and a multi-State, regional, or interstate entity having governmental duties and powers.

§ 34.110 Certification and disclosure.

(a) Each person shall file a certification, and a disclosure form, if required, with each submission that initiates agency consideration of such person for:

(1) Award of a Federal contract, grant, or cooperative agreement exceeding $100,000; or

(2) An award of a Federal loan or a commitment providing for the United States to insure or guarantee a loan exceeding $150,000.

(b) Each person shall file a certification, and a disclosure form, if required, upon receipt by such person of:

(1) A Federal contract, grant, or cooperative agreement exceeding $100,000; or

(2) A Federal loan or a commitment providing for the United States to insure or guarantee a loan exceeding $150,000,

Unless such person previously filed a certification, and a disclosure form, if required, under paragraph (a) of this section.

(c) Each person shall file a disclosure form at the end of each calendar quarter in which there occurs any event that requires disclosure or that materially affects the accuracy of the information contained in any disclosure form previously filed by such person under paragraphs (a) or (b) of this section. An event that materially affects the accuracy of the information reported includes:

(1) A cumulative increase of $25,000 or more in the amount paid or expected to be paid for influencing or attempting to influence a covered Federal action; or

(2) A change in the person(s) or individual(s) influencing or attempting to influence a covered Federal action; or,

(3) A change in the officer(s), employee(s), or Member(s) contacted to influence or attempt to influence a covered Federal action.

(d) Any person who requests or receives from a person referred to in paragraphs (a) or (b) of this section:

(1) A subcontract exceeding $100,000 at any tier under a Federal contract;

(2) A subgrant, contract, or subcontract exceeding $100,000 at any tier under a Federal grant;

(3) A contract or subcontract exceeding $100,000 at any tier under a Federal loan exceeding $150,000; or,

(4) A contract or subcontract exceeding $100,000 at any tier under a Federal cooperative agreement,

Shall file a certification, and a disclosure form, if required, to the next tier above.

(e) All disclosure forms, but not certifications, shall be forwarded from tier to tier until received by the person referred to in paragraphs (a) or (b) of this section. That person shall forward all disclosure forms to the agency.

(f) Any certification or disclosure form filed under paragraph (e) of this section shall be treated as a material representation of fact upon which all receiving tiers shall rely. All liability arising from an erroneous representation shall be borne solely by the tier filing that representation and shall not be shared by any tier to which the erroneous representation is forwarded. Submitting an erroneous certification or disclosure constitutes a failure to file the required certification or disclosure, respectively. If a person fails to file a required certification or disclosure, the United States may pursue all available remedies, including those authorized by section 1352, title 31, U.S. Code.

(g) For awards and commitments in process prior to December 23, 1989, but not made before that date, certifications shall be required at award or commitment, covering activities occurring between December 23, 1989, and the date of award or commitment. However, for awards and commitments in process prior to the December 23, 1989 effective date of these provisions, but not made before December 23, 1989, disclosure forms shall not be required at time of award or commitment but shall be filed within 30 days.

(h) No reporting is required for an activity paid for with appropriated funds if that activity is allowable under either subpart B or C.

Subpart B—Activities by Own Employees

§ 34.200 Agency and legislative liaison.

(a) The prohibition on the use of appropriated funds, in § 34.100 (a), does

not apply in the case of a payment of reasonable compensation made to an officer or employee of a person requesting or receiving a Federal contract, grant, loan, or cooperative agreement if the payment is for agency and legislative liaison activities not directly related to a covered Federal action.

(b) For purposes of paragraph (a) of this section, providing any information specifically requested by an agency or Congress is allowable at any time.

(c) For purposes of paragraph (a) of this section, the following agency and legislative liaison activities are allowable at any time only where they are not related to a specific solicitation for any covered Federal action:

(1) Discussing with an agency (including individual demonstrations) the qualities and characteristics of the person's products or services, conditions or terms of sale, and service capabilities; and,

(2) Technical discussions and other activities regarding the application or adaptation of the person's products or services for an agency's use.

(d) For purposes of paragraph (a) of this section, the following agencies and legislative liaison activities are allowable only where they are prior to formal solicitation of any covered Federal action:

(1) Providing any information not specifically requested but necessary for an agency to make an informed decision about initiation of a covered Federal action;

(2) Technical discussions regarding the preparation of an unsolicited proposal prior to its official submission; and,

(3) Capability presentations by persons seeking awards from an agency pursuant to the provisions of the Small Business Act, as amended by Public Law 95–507 and other subsequent amendments.

(e) Only those activities expressly authorized by this section are allowable under this section.

§34.205 Professional and technical services.

(a) The prohibition on the use of appropriated funds, in §34.100 (a), does not apply in the case of a payment of reasonable compensation made to an officer or employee of a person requesting or receiving a Federal contract, grant, loan, or cooperative agreement or an extension, continuation, renewal, amendment, or modification of a Federal contract, grant, loan, or cooperative agreement if payment is for professional or technical services rendered directly in the preparation, submission, or negotiation of any bid, proposal, or application for that Federal contract, grant, loan, or cooperative agreement or for meeting requirements imposed by or pursuant to law as a condition for receiving that Federal contract, grant, loan, or cooperative agreement.

(b) For purposes of paragraph (a) of this section, ''professional and technical services'' shall be limited to advice and analysis directly applying any professional or technical discipline. For example, drafting of a legal document accompanying a bid or proposal by a lawyer is allowable. Similarly, technical advice provided by an engineer on the performance or operational capability of a piece of equipment rendered directly in the negotiation of a contract is allowable. However, communications with the intent to influence made by a professional (such as a licensed lawyer) or a technical person (such as a licensed accountant) are not allowable under this section unless they provide advice and analysis directly applying their professional or technical expertise and unless the advice or analysis is rendered directly and solely in the preparation, submission or negotiation of a covered Federal action. Thus, for example, communications with the intent to influence made by a lawyer that do not provide legal advice or analysis directly and solely related to the legal aspects of his or her client's proposal, but generally advocate one proposal over another are not allowable under this section because the lawyer is not providing professional legal services. Similarly, communications with the intent to influence made by an engineer providing an engineering analysis prior to the preparation or submission of a bid or proposal are not allowable under this section since the engineer is providing technical services but not directly in the preparation, submission

or negotiation of a covered Federal action.

(c) Requirements imposed by or pursuant to law as a condition for receiving a covered Federal award include those required by law or regulation, or reasonably expected to be required by law or regulation, and any other requirements in the actual award documents.

(d) Only those services expressly authorized by this section are allowable under this section.

§ 34.210 Reporting.

No reporting is required with respect to payments of reasonable compensation made to regularly employed officers or employees of a person.

Subpart C—Activities by Other Than Own Employees

§ 34.300 Professional and technical services.

(a) The prohibition on the use of appropriated funds, in § 34.100 (a), does not apply in the case of any reasonable payment to a person, other than an officer or employee of a person requesting or receiving a covered Federal action, if the payment is for professional or technical services rendered directly in the preparation, submission, or negotiation of any bid, proposal, or application for that Federal contract, grant, loan, or cooperative agreement or for meeting requirements imposed by or pursuant to law as a condition for receiving that Federal contract, grant, loan, or cooperative agreement.

(b) The reporting requirements in § 34.110 (a) and (b) regarding filing a disclosure form by each person, if required, shall not apply with respect to professional or technical services rendered directly in the preparation, submission, or negotiation of any commitment providing for the United States to insure or guarantee a loan.

(c) For purposes of paragraph (a) of this section, ''professional and technical services'' shall be limited to advice and analysis directly applying any professional or technical discipline. For example, drafting or a legal document accompanying a bid or proposal by a lawyer is allowable. Similarly, technical advice provided by an engineer on the performance or operational capability of a piece of equipment rendered directly in the negotiation of a contract is allowable. However, communications with the intent to influence made by a professional (such as a licensed lawyer) or a technical person (such as a licensed accountant) are not allowable under this section unless they provide advice and analysis directly applying their professional or technical expertise and unless the advice or analysis is rendered directly and solely in the preparation, submission or negotiation of a covered Federal action. Thus, for example, communications with the intent to influence made by a lawyer that do not provide legal advice or analysis directly and solely related to the legal aspects of his or her client's proposal, but generally advocate one proposal over another are not allowable under this section because the lawyer is not providing professional legal services. Similarly, communications with the intent to influence made by an engineer providing an engineering analysis prior to the preparation or submission of a bid or proposal are not allowable under this section since the engineer is providing technical services but not directly in the preparation, submission or negotiation of a covered Federal action.

(d) Requirements imposed by or pursuant to law as a condition for receiving a covered Federal award include those required by law or regulation, or reasonably expected to be required by law or regulation, and any other requirements in the actual award documents.

(e) Persons other than officers or employees of a person requesting or receiving a covered Federal action include consultants and trade associations.

(f) Only those services expressly authorized by this section are allowable under this section.

Subpart D—Penalties and Enforcement

§ 34.400 Penalties.

(a) Any person who makes an expenditure prohibited herein shall be subject to a civil penalty of not less than

$10,000 and not more than $100,000 for each such expenditure.

(b) Any person who fails to file or amend the disclosure form (see Appendix B) to be filed or amended if required herein, shall be subject to a civil penalty of not less than $10,000 and not more than $100,000 for each such failure.

(c) A filing or amended filing on or after the date on which an administrative action for the imposition of a civil penalty is commenced does not prevent the imposition of such civil penalty for a failure occurring before that date. An administrative action is commenced with respect to a failure when an investigating official determines in writing to commence an investigation of an allegation of such failure.

(d) In determining whether to impose a civil penalty, and the amount of any such penalty, by reason of a violation by any person, the agency shall consider the nature, circumstances, extent, and gravity of the violation, the effect on the ability of such person to continue in business, any prior violations by such person, the degree of culpability of such person, the ability of the person to pay the penalty, and such other matters as may be appropriate.

(e) First offenders under paragraphs (a) or (b) of this section shall be subject to a civil penalty of $10,000, absent aggravating circumstances. Second and subsequent offenses by persons shall be subject to an appropriate civil penalty between $10,000 and $100,000, as determined by the agency head or his or her designee.

(f) An imposition of a civil penalty under this section does not prevent the United States from seeking any other remedy that may apply to the same conduct that is the basis for the imposition of such civil penalty.

§34.405 Penalty procedures.

Agencies shall impose and collect civil penalties pursuant to the provisions of the Program Fraud and Civil Remedies Act, 31 U.S.C. 3803 (except subsection (c)), 3804, 3805, 3806, 3807, 3808, and 3812, insofar as these provisions are not inconsistent with the requirements herein.

§34.410 Enforcement.

The head of each agency shall take such actions as are necessary to ensure that the provisions herein are vigorously implemented and enforced in that agency.

Subpart E—Exemptions

§34.500 Secretary of Defense.

(a) The Secretary of Defense may exempt, on a case-by-case basis, a covered Federal action from the prohibition whenever the Secretary determines, in writing, that such an exemption is in the national interest. The Secretary shall transmit a copy of each such written exemption to Congress immediately after making such a determination.

(b) The Department of Defense may issue supplemental regulations to implement paragraph (a) of this section.

Subpart F—Agency Reports

§34.600 Semi-annual compilation.

(a) The head of each agency shall collect and compile the disclosure reports (see Appendix B) and, on May 31 and November 30 of each year, submit to the Secretary of the Senate and the Clerk of the House of Representatives a report containing a compilation of the information contained in the disclosure reports received during the six-month period ending on March 31 or September 30, respectively, of that year.

(b) The report, including the compilation, shall be available for public inspection 30 days after receipt of the report by the Secretary and the Clerk.

(c) Information that involves intelligence matters shall be reported only to the Select Committee on Intelligence of the Senate, the Permanent Select Committee on Intelligence of the House of Representatives, and the Committees on Appropriations of the Senate and the House of Representatives in accordance with procedures agreed to by such committees. Such information shall not be available for public inspection.

(d) Information that is classified under Executive Order 12356 or any successor order shall be reported only to

the Committee on Foreign Relations of the Senate and the Committee on Foreign Affairs of the House of Representatives or the Committees on Armed Services of the Senate and the House of Representatives (whichever such committees have jurisdiction of matters involving such information) and to the Committees on Appropriations of the Senate and the House of Representatives in accordance with procedures agreed to by such committees. Such information shall not be available for public inspection.

(e) The first semi-annual compilation shall be submitted on May 31, 1990, and shall contain a compilation of the disclosure reports received from December 23, 1989 to March 31, 1990.

(f) Major agencies, designated by the Office of Management and Budget (OMB), are required to provide machine-readable compilations to the Secretary of the Senate and the Clerk of the House of Representatives no later than with the compilations due on May 31, 1991. OMB shall provide detailed specifications in a memorandum to these agencies.

(g) Non-major agencies are requested to provide machine-readable compilations to the Secretary of the Senate and the Clerk of the House of Representatives.

(h) Agencies shall keep the originals of all disclosure reports in the official files of the agency.

§ 34.605 Inspector General report.

(a) The Inspector General, or other official as specified in paragraph (b) of this section, of each agency shall prepare and submit to Congress each year, commencing with submission of the President's Budget in 1991, an evaluation of the compliance of that agency with, and the effectiveness of, the requirements herein. The evaluation may include any recommended changes that may be necessary to strengthen or improve the requirements.

(b) In the case of an agency that does not have an Inspector General, the agency official comparable to an Inspector General shall prepare and submit the annual report, or, if there is no such comparable official, the head of the agency shall prepare and submit the annual report.

(c) The annual report shall be submitted at the same time the agency submits its annual budget justifications to Congress.

(d) The annual report shall include the following: All alleged violations relating to the agency's covered Federal actions during the year covered by the report, the actions taken by the head of the agency in the year covered by the report with respect to those alleged violations and alleged violations in previous years, and the amounts of civil penalties imposed by the agency in the year covered by the report.

APPENDIX A TO PART 34—CERTIFICATION REGARDING LOBBYING

Certification for Contracts, Grants, Loans, and Cooperative Agreements

The undersigned certifies, to the best of his or her knowledge and belief, that:

(1) No Federal appropriated funds have been paid or will be paid, by or on behalf of the undersigned, to any person for influencing or attempting to influence an officer or employee of an agency, a Member of Congress, an officer or employee of Congress, or an employee of a Member of Congress in connection with the awarding of any Federal contract, the making of any Federal grant, the making of any Federal loan, the entering into of any cooperative agreement, and the extension, continuation, renewal, amendment, or modification of any Federal contract, grant, loan, or cooperative agreement.

(2) If any funds other than Federal appropriated funds have been paid or will be paid to any person for influencing or attempting to influence an officer or employee of any agency, a Member of Congress, an officer or employee of Congress, or an employee of a Member of Congress in connection with this Federal contract, grant, loan, or cooperative agreement, the undersigned shall complete and submit Standard Form–LLL, ''Disclosure Form to Report Lobbying,'' in accordance with its instructions.

(3) The undersigned shall require that the language of this certification be included in the award documents for all subawards at all tiers (including subcontracts, subgrants, and contracts under grants, loans, and cooperative agreements) and that all subrecipients shall certify and disclose accordingly.

This certification is a material representation of fact upon which reliance was placed when this transaction was made or entered into. Submission of this certification is a prerequisite for making or entering into this transaction imposed by section 1352, title 31, U.S. Code. Any person who fails to file the required certification shall be subject to a

civil penalty of not less than $10,000 and not more than $100,000 for each such failure.

Statement for Loan Guarantees and Loan Insurance

The undersigned states, to the best of his or her knowledge and belief, that:

If any funds have been paid or will be paid to any person for influencing or attempting to influence an officer or employee of any agency, a Member of Congress, an officer or employee of Congress, or an employee of a Member of Congress in connection with this commitment providing for the United States to insure or guarantee a loan, the undersigned shall complete and submit Standard Form–LLL, ''Disclosure Form to Report Lobbying,'' in accordance with its instructions.

Submission of this statement is a prerequisite for making or entering into this transaction imposed by section 1352, title 31, U.S. Code. Any person who fails to file the required statement shall be subject to a civil penalty of not less than $10,000 and not more than $100,000 for each such failure.

APPENDIX B TO PART 34—DISCLOSURE FORM TO REPORT LOBBYING

DISCLOSURE OF LOBBYING ACTIVITIES

Approved by OMB
0348-0046

Complete this form to disclose lobbying activities pursuant to 31 U.S.C. 1352
(See reverse for public burden disclosure.)

1. Type of Federal Action:
☐ a. contract
b. grant
c. cooperative agreement
d. loan
e. loan guarantee
f. loan insurance

2. Status of Federal Action:
☐ a. bid/offer/application
b. initial award
c. post-award

3. Report Type:
☐ a. initial filing
b. material change
For Material Change Only:
year _____ quarter _____
date of last report _____

4. Name and Address of Reporting Entity:
☐ Prime ☐ Subawardee
Tier _____, *if known*:

Congressional District, *if known*:

5. If Reporting Entity in No. 4 is Subawardee, Enter Name and Address of Prime:

Congressional District, *if known*:

6. Federal Department/Agency:

7. Federal Program Name/Description:

CFDA Number, *if applicable*: _____

8. Federal Action Number, *if known*:

9. Award Amount, *if known*:
$

10. a. Name and Address of Lobbying Entity
(if individual, last name, first name, MI):

b. Individuals Performing Services *(including address if different from No. 10a)*
(last name, first name, MI):

(attach Continuation Sheet(s) SF-LLL-A, if necessary)

11. Amount of Payment *(check all that apply)*:
$ _____ ☐ actual ☐ planned

12. Form of Payment *(check all that apply)*:
☐ a. cash
☐ b. in-kind; specify: nature _____
value _____

13. Type of Payment *(check all that apply)*:
☐ a. retainer
☐ b. one-time fee
☐ c. commission
☐ d. contingent fee
☐ e. deferred
☐ f. other; specify: _____

14. Brief Description of Services Performed or to be Performed and Date(s) of Service, including officer(s), employee(s), or Member(s) contacted, for Payment Indicated in Item 11:

(attach Continuation Sheet(s) SF-LLL-A, if necessary)

15. Continuation Sheet(s) SF-LLL-A attached: ☐ Yes ☐ No

16. Information requested through this form is authorized by title 31 U.S.C. section 1352. This disclosure of lobbying activities is a material representation of fact upon which reliance was placed by the tier above when this transaction was made or entered into. This disclosure is required pursuant to 31 U.S.C. 1352. This information will be reported to the Congress semi-annually and will be available for public inspection. Any person who fails to file the required disclosure shall be subject to a civil penalty of not less than $10,000 and not more than $100,000 for each such failure.

Signature: _____
Print Name: _____
Title: _____
Telephone No.: _____ **Date:** _____

Federal Use Only:

Authorized for Local Reproduction
Standard Form - LLL

INSTRUCTIONS FOR COMPLETION OF SF-LLL, DISCLOSURE OF LOBBYING ACTIVITIES

This disclosure form shall be completed by the reporting entity, whether subawardee or prime Federal recipient, at the initiation or receipt of a covered Federal action, or a material change to a previous filing, pursuant to title 31 U.S.C. section 1352. The filing of a form is required for each payment or agreement to make payment to any lobbying entity for influencing or attempting to influence an officer or employee of any agency, a Member of Congress, an officer or employee of Congress, or an employee of a Member of Congress in connection with a covered Federal action. Use the SF-LLL-A Continuation Sheet for additional information if the space on the form is inadequate. Complete all items that apply for both the initial filing and material change report. Refer to the implementing guidance published by the Office of Management and Budget for additional information.

1. Identify the type of covered Federal action for which lobbying activity is and/or has been secured to influence the outcome of a covered Federal action.
2. Identify the status of the covered Federal action.
3. Identify the appropriate classification of this report. If this is a followup report caused by a material change to the information previously reported, enter the year and quarter in which the change occurred. Enter the date of the last previously submitted report by this reporting entity for this covered Federal action.
4. Enter the full name, address, city, state and zip code of the reporting entity. Include Congressional District, if known. Check the appropriate classification of the reporting entity that designates if it is, or expects to be, a prime or subaward recipient. Identify the tier of the subawardee, e.g., the first subawardee of the prime is the 1st tier. Subawards include but are not limited to subcontracts, subgrants and contract awards under grants.
5. If the organization filing the report in item 4 checks "Subawardee", then enter the full name, address, city, state and zip code of the prime Federal recipient. Include Congressional District, if known.
6. Enter the name of the Federal agency making the award or loan commitment. Include at least one organizational level below agency name, if known. For example, Department of Transportation, United States Coast Guard.
7. Enter the Federal program name or description for the covered Federal action (item 1). If known, enter the full Catalog of Federal Domestic Assistance (CFDA) number for grants, cooperative agreements, loans, and loan commitments.
8. Enter the most appropriate Federal identifying number available for the Federal action identified in item 1 (e.g., Request for Proposal (RFP) number; Invitation for Bid (IFB) number; grant announcement number; the contract, grant, or loan award number; the application/proposal control number assigned by the Federal agency). Include prefixes, e.g., "RFP-DE-90-001."
9. For a covered Federal action where there has been an award or loan commitment by the Federal agency, enter the Federal amount of the award/loan commitment for the prime entity identified in item 4 or 5.
10. (a) Enter the full name, address, city, state and zip code of the lobbying entity engaged by the reporting entity identified in item 4 to influence the covered Federal action.

    (b) Enter the full names of the individual(s) performing services, and include full address if different from 10 (a). Enter Last Name, First Name, and Middle Initial (MI).
11. Enter the amount of compensation paid or reasonably expected to be paid by the reporting entity (item 4) to the lobbying entity (item 10). Indicate whether the payment has been made (actual) or will be made (planned). Check all boxes that apply. If this is a material change report, enter the cumulative amount of payment made or planned to be made.
12. Check the appropriate box(es). Check all boxes that apply. If payment is made through an in-kind contribution, specify the nature and value of the in-kind payment.
13. Check the appropriate box(es). Check all boxes that apply. If other, specify nature.
14. Provide a specific and detailed description of the services that the lobbyist has performed, or will be expected to perform, and the date(s) of any services rendered. Include all preparatory and related activity, not just time spent in actual contact with Federal officials. Identify the Federal official(s) or employee(s) contacted or the officer(s), employee(s), or Member(s) of Congress that were contacted.
15. Check whether or not a SF-LLL-A Continuation Sheet(s) is attached.
16. The certifying official shall sign and date the form, print his/her name, title, and telephone number.

Public reporting burden for this collection of information is estimated to average 30 mintues per response, including time for reviewing instructions, searching existing data sources, gathering and maintaining the data needed, and completing and reviewing the collection of information. Send comments regarding the burden estimate or any other aspect of this collection of information, including suggestions for reducing this burden, to the Office of Management and Budget, Paperwork Reduction Project (0348-0046), Washington, D.C. 20503.

DISCLOSURE OF LOBBYING ACTIVITIES
CONTINUATION SHEET

Approved by OMB
0348-0046

Reporting Entity: _____ **Page** _____ **of** _____

Authorized for Local Reproduction
Standard Form - LLL-A

PART 35—STATE AND LOCAL ASSISTANCE

Sec.
35.001 Applicability.

Subpart A—Financial Assistance for Continuing Environmental Programs

35.100 Purpose.
35.105 Definitions.
35.110 Summary of annual process.
35.115 State allotments and reserves.
35.120 Planning targets.
35.125 Program guidance.
35.130 Work program.
35.135 Budget period.
35.140 Application for assistance.
35.141 EPA action on application.
35.143 Assistance amount.
35.145 Consolidated assistance.
35.150 Evaluation of recipient performance.
35.155 Reallocation.

AIR POLLUTION CONTROL (SECTION 105)

35.200 Purpose.
35.201 Definitions applicable to section 105.
35.205 Maximum Federal share.
35.210 Maintenance of effort.
35.215 Limitations.

WATER POLLUTION CONTROL (SECTION 106)

35.250 Purpose.
35.255 Maintenance of effort.
35.260 Limitations.
35.265 Awards to Indian Tribes.

STATE ADMINISTRATION (SECTION 205(G))

35.300 Purpose.
35.305 Maintenance of effort.
35.310 Limitations.

WATER QUALITY MANAGEMENT PLANNING (SECTION 205(J)(2))

35.350 Purpose.
35.355 Maximum Federal share.
35.360 Limitations.
35.365 Awards to Indian Tribes.

PUBLIC WATER SYSTEM SUPERVISION (SECTION 1443(A))

35.400 Purpose.
35.405 Maximum Federal share.
35.410 Limitations.
35.415 Indian Tribes.

UNDERGROUND WATER SOURCE PROTECTION (SECTION 1443(B))

35.450 Purpose.
35.455 Maximum Federal share.
35.460 Limitations.
35.465 Indian Tribes.

HAZARDOUS WASTE MANAGEMENT (SECTION 3011)

35.500 Purpose.
35.505 Maximum Federal share.
35.510 Limitations.

PESTICIDE ENFORCEMENT (SECTION 23(A)(1))

35.550 Purpose.
35.555 Maximum Federal share.

PESTICIDE APPLICATOR CERTIFICATION AND TRAINING (SECTION 23(A)(2))

35.600 Purpose.
35.605 Maximum Federal share.

NONPOINT SOURCE MANAGEMENT (SECTIONS 205(j)(5) and 319(h)

35.750 Purpose.
35.755 Awards to Indian Tribes.
35.760 Maximum Federal share.

Subparts B–D—[Reserved]

Subpart E—Grants for Construction of Treatment Works—Clean Water Act

35.900 Purpose.
35.901 Program policy.
35.903 Summary of construction grant program.
35.905 Definitions.
35.907 Municipal pretreatment program.
35.908 Innovative and alternative technologies.
35.909 Step 2+3 grants.
35.910 Allocation of funds.
35.910–1 Allotments.
35.910–2 Period of availability; reallotment.
35.910–3—35.910–4 [Reserved]
35.910–5 Additional allotments of previously withheld sums.
35.910–6 Fiscal Year 1977 public works allotments.
35.910–7 Fiscal Year 1977 Supplemental Appropriations Act allotments.
35.910–8 Allotments for fiscal years 1978–1981.
35.910–9 Allotment of Fiscal Year 1978 appropriation.
35.910–10 Allotment of Fiscal Year 1979 appropriation.
35.910–11 Allotment of Fiscal Year 1980 appropriation.
35.910–12 Reallotment of deobligated funds of fiscal year 1978.
35.912 Delegation to State agencies.
35.915 State priority system and project priority list.
35.915–1 Reserves related to the project priority list.
35.917 Facilities planning (step 1).
35.917–1 Content of facilities plan.
35.917–2 State responsibilities.
35.917–3 Federal assistance.
35.917–4 Planning scope and detail.
35.917–5 Public participation.

35.917–6 Acceptance by implementing governmental units.
35.917–7 State review and certification of facilities plan.
35.917–8 Submission and approval of facilities plan.
35.917–9 Revision or amendment of facilities plan.
35.918 Individual systems.
35.918–1 Additional limitations on awards for individual systems.
35.918–2 Eligible and ineligible costs.
35.918–3 Requirements for discharge of effluents.
35.920 Grant application.
35.920–1 Eligibility.
35.920–2 Procedure.
35.920–3 Contents of application.
35.925 Limitations on award.
35.925–1 Facilities planning.
35.925–2 Water quality management plans and agencies.
35.925–3 Priority determination.
35.925–4 State allocation.
35.925–5 Funding and other capabilities.
35.925–6 Permits.
35.925–7 Design.
35.925–8 Environmental review.
35.925–9 Civil rights.
35.925–10 Operation and maintenance program.
35.925–11 User charges and industrial cost recovery.
35.925–12 Property.
35.925–13 Sewage collection system.
35.925–14 Compliance with environmental laws.
35.925–15 Treatment of industrial wastes.
35.925–16 Federal activities.
35.925–17 Retained amounts for reconstruction and expansion.
35.925–18 Limitation upon project costs incurred prior to award.
35.925–19 [Reserved]
35.925–20 Procurement.
35.925–21 Storm sewers.
35.926 Value engineering (VE).
35.927 Sewer system evaluation and rehabilitation.
35.927–1 Infiltration/inflow analysis.
35.927–2 Sewer system evaluation survey.
35.927–3 Rehabilitation.
35.927–4 Sewer use ordinance.
35.927–5 Project procedures.
35.928 Requirements for an industrial cost recovery system.
35.928–1 Approval of the industrial cost recovery system.
35.928–2 Use of industrial cost recovery payments.
35.928–3 Implementation of the industrial cost recovery system.
35.928–4 Moratorium on industrial cost recovery payments.
35.929 Requirements for user charge system.
35.929–1 Approval of the user charge system.
35.929–2 General requirements for all user charge systems.
35.929–3 Implementation of the user charge system.
35.930 Award of grant assistance.
35.930–1 Types of projects.
35.930–2 Grant amount.
35.930–3 Grant term.
35.930–4 Project scope.
35.930–5 Federal share.
35.930–6 Limitation on Federal share.
35.935 Grant conditions.
35.935–1 Grantee responsibilities.
35.935–2 Procurement.
35.935–3 Property.
35.935–4 Step 2+3 projects.
35.935–5 Davis-Bacon and related statutes.
35.935–6 Equal employment opportunity.
35.935–7 Access.
35.935–8 Supervision.
35.935–9 Project initiation and completion.
35.935–10 Copies of contract documents.
35.935–11 Project changes.
35.935–12 Operation and maintenance.
35.935–13 Submission and approval of user charge systems.
35.935–14 Final inspection.
35.935–15 Submission and approval of industrial cost recovery system.
35.935–16 Sewer use ordinance and evaluation/rehabilitation program.
35.935–17 Training facility.
35.935–18 Value engineering.
35.935–19 Municipal pretreatment program.
35.935–20 Innovative processes and techniques.
35.936 Procurement.
35.936–1 Definitions.
35.936–2 Grantee procurement systems; State or local law.
35.936–3 Competition.
35.936–4 Profits.
35.936–5 Grantee responsibility.
35.936–6 EPA responsibility.
35.936–7 Small and minority business.
35.936–8 Privity of contract.
35.936–9 Disputes.
35.936–10 Federal procurement regulations.
35.936–11 General requirements for subagreements.
35.936–12 Documentation.
35.936–13 Specifications.
35.936–14 Force account work.
35.936–15 Limitations on subagreement award.
35.936–16 Code or standards of conduct.
35.936–17 Fraud and other unlawful or corrupt practices.
35.936–18 Negotiation of subagreements.
35.936–19 Small purchases.
35.936–20 Allowable costs.
35.936–21 Delegation to State agencies; certification of procurement systems.
35.936–22 Bonding and insurance.
35.937 Subagreements for architectural or engineering services.
35.937–1 Type of contract (subagreement).

35.937–2 Public notice.
35.937–3 Evaluation of qualifications.
35.937–4 Solicitation and evaluation of proposals.
35.937–5 Negotiation.
35.937–6 Cost and price considerations.
35.937–7 Profit.
35.937–8 Award of subagreement.
35.937–9 Required solicitation and subagreement provisions.
35.937–10 Subagreement payments—architectural or engineering services.
35.937–11 Applicability to existing contracts.
35.937–12 Subcontracts under subagreements for architectural or engineering services.
35.938 Construction contracts (subagreements) of grantees.
35.938–1 Applicability.
35.938–2 Performance by contract.
35.938–3 Type of contract.
35.938–4 Formal advertising.
35.938–5 Negotiation of contract amendments (change orders).
35.938–6 Progress payments to contractors.
35.938–7 Retention from progress payments.
35.938–8 Required construction contract provisions.
35.938–9 Subcontracts under construction contracts.
35.939 Protests.
35.940 Determination of allowable costs.
35.940–1 Allowable project costs.
35.940–2 Unallowable costs.
35.940–3 Costs allowable, if approved.
35.940–4 Indirect costs.
35.940–5 Disputes concerning allowable costs.
35.945 Grant payments.
35.950 Suspension, termination or annulment of grants.
35.955 Grant amendments to increase grant amounts.
35.960 Disputes.
35.965 Enforcement.
35.970 Contract enforcement.

APPENDICES TO SUBPART E

APPENDIX A—COST-EFFECTIVENESS ANALYSIS GUIDELINES
APPENDIX B—FEDERAL GUIDELINES—USER CHARGES FOR OPERATION AND MAINTENANCE OF PUBLICLY OWNED TREATMENT WORKS
APPENDIX C–1—REQUIRED PROVISIONS—CONSULTING ENGINEERING AGREEMENTS
APPENDIX C–2—REQUIRED PROVISIONS—CONSTRUCTION CONTRACTS
APPENDIX D—EPA TRANSITION POLICY—EXISTING CONSULTING ENGINEERING AGREEMENTS
APPENDIX E—INNOVATIVE AND ALTERNATIVE TECHNOLOGY GUIDELINES

Subparts F–G—[Reserved]

Subpart H—Cooperative Agreements for Protecting and Restoring Publicly Owned Freshwater Lakes

35.1600 Purpose.
35.1603 Summary of clean lakes assistance program.
35.1605 Definitions.
35.1605–1 The Act.
35.1605–2 Freshwater lake.
35.1605–3 Publicly owned freshwater lake.
35.1605–4 Nonpoint source.
35.1605–5 Eutrophic lake.
35.1605–6 Trophic condition.
35.1605–7 Desalinization.
35.1605–8 Diagnostic-feasibility study.
35.1605–9 Indian Tribe set forth at 40 CFR 130.6(d).
35.1610 Eligibility.
35.1613 Distribution of funds.
35.1615 Substate agreements.
35.1620 Application requirements.
35.1620–1 Types of assistance.
35.1620–2 Contents of applications.
35.1620–3 Environmental evaluation.
35.1620–4 Public participation.
35.1620–5 State work programs and lake priority lists.
35.1620–6 Intergovernmental review.
35.1630 State lake classification surveys.
35.1640 Application review and evaluation.
35.1640–1 Application review criteria.
35.1650 Award.
35.1650–1 Project period.
35.1650–2 Limitations on awards.
35.1650–3 Conditions on award.
35.1650–4 Payment.
35.1650–5 Allowable costs.
35.1650–6 Reports.
APPENDIX A TO SUBPART H—REQUIREMENTS FOR DIAGNOSTIC-FEASIBILITY STUDIES AND ENVIRONMENTAL EVALUATIONS

Subpart I—Grants for Construction of Treatment Works

35.2000 Purpose and policy.
35.2005 Definitions.
35.2010 Allotment; reallotment.
35.2012 Capitalization grants.
35.2015 State priority system and project priority list.
35.2020 Reserves.
35.2021 Reallotment of reserves.
35.2023 Water quality management planning.
35.2024 Combined sewer overflows.
35.2025 Allowance and advance of allowance.
35.2030 Facilities planning.
35.2032 Innovative and alternative technologies.
35.2034 Privately owned individual systems.
35.2035 Rotating biological contractor (RBC) replacement grants.
35.2036 Design/build project grants.

35.2040 Grant application.
35.2042 Review of grant applications.
35.2050 Effect of approval or certification of documents.
35.2100 Limitations on award.
35.2101 Advanced treatment.
35.2102 Water quality management planning.
35.2103 Priority determination.
35.2104 Funding and other considerations.
35.2105 Debarment and suspension.
35.2106 Plan of operation.
35.2107 Intermunicipal service agreements.
35.2108 Phased or segmented treatment works.
35.2109 Step 2+3.
35.2110 Access to individual systems.
35.2111 Revised water quality standards.
35.2112 Marine discharge waiver applicants.
35.2113 Environmental review.
35.2114 Value engineering.
35.2116 Collection system.
35.2118 Preaward costs.
35.2120 Infiltration/Inflow.
35.2122 Approval of user charge system and proposed sewer use ordinance.
35.2123 Reserve capacity.
35.2125 Treatment of wastewater from industrial users.
35.2127 Federal facilities.
35.2130 Sewer use ordinance.
35.2140 User charge system.
35.2152 Federal share.
35.2200 Grant conditions.
35.2202 Step 2+3 projects.
35.2203 Step 7 projects.
35.2204 Project changes.
35.2205 Maximum allowable project cost.
35.2206 Operation and maintenance.
35.2208 Adoption of sewer use ordinance and user charge system.
35.2210 Land acquisition.
35.2211 Field testing for Innovative and Alternative Technology Report.
35.2212 Project initiation.
35.2214 Grantee responsibilities.
35.2216 Notice of building completion and final inspection.
35.2218 Project performance.
35.2250 Determination of allowable costs.
35.2260 Advance purchase of eligible land.
35.2262 Funding of field testing.
35.2300 Grant payments.
35.2350 Subagreement enforcement.
APPENDIX A TO SUBPART I—DETERMINATION OF ALLOWABLE COSTS
APPENDIX B TO SUBPART I—ALLOWANCE FOR FACILITIES PLANNING AND DESIGN

Subpart J—Construction Grants Program Delegation to States

35.3000 Purpose.
35.3005 Policy.
35.3010 Delegation agreement.
35.3015 Extent of State responsibilities.
35.3020 Certification procedures.
35.3025 Overview of State performance under delegation.
35.3030 Right of review of State decision.
35.3035 Public participation.

Subpart K—State Water Pollution Control Revolving Funds

35.3100 Policy and purpose.
35.3105 Definitions.
35.3110 Fund establishment.
35.3115 Eligible activities of the SRF.
35.3120 Authorized types of assistance.
35.3125 Limitations on SRF assistance.
35.3130 The capitalization grant agreement.
35.3135 Specific capitalization grant agreement requirements.
35.3140 Environmental review requirements.
35.3145 Application of other Federal authorities.
35.3150 Intended Use Plan (IUP).
35.3155 Payments.
35.3160 Cash draw rules.
35.3165 Reports and audits.
35.3170 Corrective action.
APPENDIX A TO SUBPART K—CRITERIA FOR EVALUATING A STATE'S PROPOSED NEPA-LIKE PROCESS

Subpart L—[Reserved]

Subpart M—Grants for Technical Assistance

35.4000 Authority.
35.4005 Purpose and availability of referenced material.
35.4010 Definitions.
35.4013 Cost principles.
35.4015 State administration of the program.
35.4020 Responsibility requirements.
35.4025 Eligible applicants.
35.4030 Ineligible applicants.
35.4035 Evaluation criteria.
35.4040 Notification process.
35.4045 Submission of application.
35.4050 Timing of award.
35.4055 Ineligible activities.
35.4060 Eligible activities.
35.4065 Technical advisor's qualifications.
35.4066 Procurement.
35.4067 Contract review.
35.4070 Sanctions.
35.4075 Pre-award costs.
35.4080 Method of payment.
35.4085 Grant limitations.
35.4090 Waivers.
35.4100 Disputes.
35.4105 Record retention and audits.
35.4110 Reports.
35.4115 Availability of information.
35.4120 Budget period.
35.4125 Federal facilities.
35.4130 Conflict of interest and disclosure requirements.

Subpart N—[Reserved]

Subpart O—Cooperative Agreements and Superfund State Contracts for Superfund Response Actions

GENERAL

35.6000 Authority.
35.6005 Purpose and scope.
35.6010 Eligibility.
35.6015 Definitions.
35.6020 Other statutory provisions.
35.6025 Deviation from this subpart.

PRE-REMEDIAL RESPONSE COOPERATIVE AGREEMENTS

35.6050 Eligibility for pre-remedial Cooperative Agreements.
35.6055 State-lead pre-remedial Cooperative Agreements.
35.6060 Political subdivision-lead pre-remedial Cooperative Agreements.
35.6070 Indian Tribe-lead pre-remedial Cooperative Agreements.

REMEDIAL RESPONSE COOPERATIVE AGREEMENTS

35.6100 Eligibility for remedial Cooperative Agreements.
35.6105 State-lead remedial Cooperative Agreements.
35.6110 Indian Tribe-lead remedial Cooperative Agreements.
35.6115 Political subdivision-lead remedial Cooperative Agreements.
35.6120 Notification of the out-of-State or out-of-Indian Tribal jurisdiction transfer of CERCLA waste.

ENFORCEMENT COOPERATIVE AGREEMENTS

35.6145 Eligibility for enforcement Cooperative Agreements.
35.6150 Activities eligible for funding under enforcement Cooperative Agreements.
35.6155 State, political subdivision or Indian Tribe-lead enforcement Cooperative Agreements.

REMOVAL RESPONSE COOPERATIVE AGREEMENTS

35.6200 Eligibility for removal Cooperative Agreements.
35.6205 Removal Cooperative Agreements.

CORE PROGRAM COOPERATIVE AGREEMENTS

35.6215 Eligibility for Core Program Cooperative Agreements.
35.6220 General.
35.6225 Activities eligible for funding under Core Program Cooperative Agreements.
35.6230 Application requirements.
35.6235 Cost sharing.

SUPPORT AGENCY COOPERATIVE AGREEMENTS

35.6240 Eligibility for support agency Cooperative Agreements.
35.6245 Allowable activities.
35.6250 Support agency Cooperative Agreement requirements.
35.6255 Cost sharing.

FINANCIAL ADMINISTRATION REQUIREMENTS UNDER A COOPERATIVE AGREEMENT

35.6270 Standards for financial management systems.
35.6275 Period of availability of funds.
35.6280 Payments.
35.6285 Recipient payment of response costs.
35.6290 Program income.

PERSONAL PROPERTY REQUIREMENTS UNDER A COOPERATIVE AGREEMENT

35.6300 General personal property acquisition and use requirements.
35.6305 Obtaining supplies.
35.6310 Obtaining equipment.
35.6315 Alternative methods for obtaining property.
35.6320 Usage rate.
35.6325 Title and EPA interest in CERCLA-funded property.
35.6330 Title to federally owned property.
35.6335 Property management standards.
35.6340 Disposal of CERCLA-funded property.
35.6345 Equipment disposal options.
35.6350 Disposal of federally owned property.

REAL PROPERTY REQUIREMENTS UNDER A COOPERATIVE AGREEMENT

35.6400 Acquisition and transfer of interest.
35.6405 Use.

COPYRIGHT REQUIREMENTS UNDER A COOPERATIVE AGREEMENT

35.6450 General requirements.

USE OF RECIPIENT EMPLOYEES (''FORCE ACCOUNT'') UNDER A COOPERATIVE AGREEMENT

35.6500 General requirements.

PROCUREMENT REQUIREMENTS UNDER A COOPERATIVE AGREEMENT

35.6550 Procurement system standards.
35.6555 Competition.
35.6560 Master list of debarred, suspended, and voluntarily excluded persons.
35.6565 Procurement methods.
35.6570 Use of the same engineer during subsequent phases of response.
35.6575 Restrictions on types of contracts.
35.6580 Contracting with minority and women's business enterprises (MBE/WBE), small businesses, and labor surplus area firms.
35.6585 Cost and price analysis.
35.6590 Bonding and insurance.

35.6595 Contract provisions.
35.6600 Contractor claims.
35.6605 Privity of contract.
35.6610 Contracts awarded by a contractor.

REPORTS REQUIRED UNDER A COOPERATIVE AGREEMENT

35.6650 Quarterly progress reports.
35.6655 Notification of significant developments.
35.6660 Property inventory reports.
35.6665 Procurement reports.
35.6670 Financial reports.

RECORDS REQUIREMENTS UNDER A COOPERATIVE AGREEMENT

35.6700 Project records.
35.6705 Records retention.
35.6710 Records access.

OTHER ADMINISTRATIVE REQUIREMENTS FOR COOPERATIVE AGREEMENTS

35.6750 Modifications.
35.6755 Monitoring program performance.
35.6760 Enforcement and termination for convenience.
35.6765 Non-Federal audit.
35.6770 Disputes.
35.6775 Exclusion of third-party benefits.
35.6780 Closeout.
35.6785 Collection of amounts due.
35.6790 High risk recipients.

REQUIREMENTS FOR ADMINISTERING A SUPERFUND STATE CONTRACT (SSC)

35.6800 General.
35.6805 Contents of an SSC.
35.6815 Administrative requirements.
35.6820 Conclusion of the SSC.

Subpart P—Financial Assistance for the National Estuary Program

35.9000 Applicability.
35.9005 Purpose.
35.9010 Definitions.
35.9015 Summary of annual process.
35.9020 Planning targets.
35.9030 Work program.
35.9035 Budget period.
35.9040 Application for assistance.
35.9045 EPA action on application.
35.9050 Assistance amount.
35.9055 Evaluation of recipient performance.
35.9060 Maximum Federal share.
35.9065 Limitations.
35.9070 National program assistance agreements.

Subpart Q—General Assistance Grants to Indian Tribes

35.10000 Authority.
35.10005 Purpose and scope.
35.10010 Definitions.
35.10015 Eligible recipients.
35.10020 Eligible activities.
35.10025 Limitations.
35.10030 Grant management.
35.10035 Procurement under general assistance agreements.

AUTHORITY: 42 U.S.C. 4368b.

§ 35.001 Applicability.

This part codifies policies and procedures for financial assistance awarded by the Environmental Protection Agency to State, interstate, and local agencies for pollution abatement and control programs. These provisions supplement the EPA general assistance regulations in 40 CFR part 30.

[47 FR 44954, Oct. 12, 1982]

Part A—Financial Assistance for Continuing Environmental Programs

AUTHORITY: Secs. 105 and 301(a) of the Clean Air Act, as amended (42 U.S.C. 7405 and 7601(a)); Secs. 106, 205(g), 205(j), 208, 319, 501(a), and 518 of the Clean Water Act, as amended (33 U.S.C. 1256, 1285(g), 1285(j), 1288, 1361(a) and 1377); secs. 1443, 1450, and 1451 of the Safe Drinking Water Act (42 U.S.C. 300j–2, 300j–9 and 300j–11); secs. 2002(a) and 3011 of the Solid Waste Disposal Act, as amended by the Resource Conservation and Recovery Act of 1976 (42 U.S.C. 6912(a), 6931, 6947, and 6949); and secs. 4, 23, and 25(a) of the Federal Insecticide, Fungicide and Rodenticide Act, as amended (7 U.S.C. 136(b), 136(u) and 136w(a)).

SOURCE: 47 FR 44954, Oct. 12, 1982, unless otherwise noted.

§ 35.100 Purpose.

This subpart establishes in §§ 35.100 through 35.199 uniform administrative requirements and procedures for financial assistance to State, interstate, and local agencies for continuing environmental programs. Sections 35.200 through 35.899 establish the assistance requirements unique to each program and cross reference regulations containing substantive program requirements.

§ 35.105 Definitions.

Allotment. An amount representing a State's share of funds requested in the President's budget or appropriated by

Congress for an environmental program, as EPA determines after considering any factors indicated by this regulation. The allotment is not an entitlement but rather the objective basis for determining the range for a State's planning target.

Continuation award. Any assistance award after the first award to a State, interstate, or local agency for a continuing environmental program.

Continuing environmental programs. Those pollution control programs which will not be completed within a definable time period.

Eligible Indian Tribe means for purposes of the Clean Water Act, any federally recognized Indian Tribe that meets the requirements set forth at 40 CFR 130.6(d).

Federal Indian reservation means for purposes of Clean Water Act, all land within the limits of any Indian reservation under the jurisdiction of the United States Government, notwithstanding the issuance of any patent, and including rights-of-way running through the reservation.

Indian Tribe means, within the context of the Public Water System Supervision and Underground Water Source Protection grants, any Indian Tribe having a Federally recognized governing body carrying out substantial governmental duties and powers over a defined area.

Indian Tribe means for purposes of the Clean Water Act, any Indian Tribe, band, group, or community recognized by the Secretary of the Interior and exercising governmental authority over a Federal Indian reservation.

Output. An activity or product which the applicant agrees to complete during the budget period.

Planning target. The amount of Federal financial assistance which the Regional Administrator suggests that an applicant consider in developing its application and work program.

Program element. One of the major groupings of outputs of a continuing environmental program (e.g., administration, enforcement, monitoring).

Recurrent expenditures, except for the purposes of section 105 of the Clean Air Act (See §35.201), means those expenditures associated with the activities of a continuing environmental program. All expenditures, except those for equipment purchases with a unit acquisition cost of $5,000 or more, are considered recurrent unless justified by the applicant as unique and approved as such by the Regional Administrator in the assistance award.

Reserve. A portion of the State's construction grant allotment which the State proposes to set aside to use for construction or permit program management or water quality management planning activities.

State means within the context of Public Water Systems Supervision and Underground Water Source Protection grants or of financial assistance programs under the Clean Water Act, one of the States of the United States, the District of Columbia, the Commonwealth of Puerto Rico, the Virgin Islands, Guam, American Samoa, the Commonwealth of the Northern Mariana Islands, the Trust Territories of the Pacific Islands or an eligible Indian Tribe.

Work program. The document which identifies how and when the applicant will use program funds to produce specific outputs.

[47 FR 44954, Oct. 12, 1982, as amended at 53 FR 37408, Sept. 26, 1988; 54 FR 14357, Apr. 11, 1989; 59 FR 13817, Mar. 23, 1994; 60 FR 371, Jan. 4, 1995]

§35.110 Summary of annual process.

(a) EPA considers various factors to allot among the States the funds requested in the President's budget for each financial assistance program, except for those related to construction grants, for which Congress determines the allotments. From its construction grant allotment, the State proposes reserves for State administration and water quality management planning. The Regional Administrator issues a planning target for each program to each applicant based on the reserves and allotments.

(b) Using the planning target and guidance provided by EPA, each applicant completes a standard EPA application including a proposed work program for each environmental program for which it expects to receive EPA funding. Alternatively, an applicant prepares a consolidated work program

to support several individual applications or a single consolidated application. After the applicant submits its application, the Regional Administrator reviews it and, if it meets applicable requirements, approves the application and agrees to make an award when funds are available. The Regional Administrator awards assistance from funds appropriated by Congress for that purpose.

(c) The recipient conducts its activities according to the approved application and assistance award. The Regional Administrator evaluates recipient performance to assure compliance with all conditions of the assistance award.

(d) Except for funds reserved under section 205 (g) and (j) of the Clean Water Act, the Administrator or Regional Administrator may use funds not awarded or committed to an applicant to supplement awards to other applicants for that program or to support a Federal program required in the absence of an acceptable State program.

§ 35.115 State allotments and reserves.

Allotments and reserves provide an objective basis for establishing planning targets and funding levels for work programs. Congress determines the construction grant allotment, from which the State proposes reserves for State administration and water quality management planning. EPA determines the allotments for the other financial assistance programs based on the President's budget request to Congress. The factors and limitations considered for each program are as follows:

(a) *Air pollution control allotment* (Clean Air Act, section 105): Population, the extent of actual or potential air pollution problems, and the financial need of each agency to be funded with the State's allotment. However, no state shall have made available to it for application an allotment of less than one-half of 1 percent nor more than 10 percent of the annual appropriation for section 105 grants.

(b) *Water pollution control allotment including ground-water protection allotments* (Clean Water Act, section 106): The extent of the State's water pollution problem. In each fiscal year, the Administrator will reserve a percentage of the total available funds for eligible Indian Tribes,

(c) *State administration reserve* (Clean Water Act, section 205(g)): Up to four percent of the State's authorized construction grant allotment as determined by Congress or $400,000, whichever is greater.

(d) *Water quality management planning reserve* (Clean Water Act, section 205(j)(1)): Not less than $100,000 nor more than one percent of the State's construction grant allotment as determined by Congress. However, for Guam, the Virgin Islands, American Samoa, the Trust Territories of the Pacific Islands and the Northern Marina Islands, a reasonable amount shall be reserved for this purpose. Each fiscal year the Administrator may reserve a percentage of the sums appropriated under section 207 for water quality management planning assistance to eligible Indian Tribes,

(e) *Public Water System Supervision Allotment* (Safe Drinking Water Act, section 1443(a)): The State's population, geographic area, numbers of community and non-community water systems, and other relevant factors. However, no State, except American Samoa, Guam, the Northern Mariana Islands, the Virgin Islands, or the Trust Territory of the Pacific Islands may be allotted less than one percent of the total, except that for fiscal years beginning after fiscal year 1989, to the extent that fiscal year appropriations exceed the amount of fiscal year 1989 appropriations, States shall share in any excess based upon the grant formula in effect for such fiscal years.

(f) *Ground-water Quality Protection Reserve* (Clean Water Act, section 319(i)): Each fiscal year the Administrator may reserve for eligible Indian Tribes one-third of one percent of the amount appropriated under section 319(j) for 319(h) and (i).

(g) Public Water System Supervision allotment (Safe Drinking Water Act, section 1443(a)): Population, geographic area, numbers of community and non-community water systems and other relevant factors. All jurisdictions except American Samoa, Guam, the Northern Mariana Islands, the Virgin Islands or an individual eligible Indian

Tribe shall be allotted at least one percent. Up to three percent of the Public Water System Supervision funds shall be reserved each year for use on Indian lands.

(h) Underground Water Source Protection allotment (Safe Drinking Water Act, section 1443(b)): Population, geographic area, extent of underground injection practices, and other relevant factors. Up to five percent of the Underground Water Source Protection funds shall be reserved each year for use on Indian lands.

(i) Hazardous waste management allotment (Solid Waste Disposal Act, as amended, section 3011): The extent to which hazardous waste is generated, transported, treated, stored, and disposed of in the State and the extent of exposure of human beings and the environment to such waste, and such other factors as the Administrator deems appropriate.

(j) *Pesticide enforcement allotment* (Federal Insecticide, Fungicide, and Rodenticide Act, section 23): The State's population, the numbers of pesticide-producing establishments and certified private and commercial applicators, and the number of farms and their acreage.

(k) *Pesticide applicator certification and training allotment* (Federal Insecticide, Fungicide, and Rodenticide Act, section 23): The number of farms and numbers of private and commercial applicators requiring certification or recertification.

[47 FR 44954, Oct. 12, 1982, as amended at 54 FR 14357, Apr. 11, 1989; 54 FR 40368, Sept. 29, 1989; 57 FR 8074, Mar. 6, 1992; 59 FR 13817, Mar. 23, 1994; 60 FR 371, Jan. 4, 1995]

§ 35.120 Planning targets.

The Regional Administrator develops planning targets to help each applicant develop a work program. A planning target is the State's reserve or is based on the State's allotment and the Regional Administrator's evaluation of each applicant's ability to use allotted funds effectively.

§ 35.125 Program guidance.

Program guidance helps State and local agencies establish and maintain effective environmental programs which meet their particular needs and those of the national program. National program managers in Headquarters issue guidance to Regional Administrators, and Regional Administrators issue guidance to applicants.

(a) *Headquarters guidance to Regional Administrators.* Headquarters guidance is based on the President's annual budget submission to Congress and the statutory and regulatory requirements for each environmental program. The guidance contains a statement of national objectives and priorities, an explanation of the activities required of the regions, and a list of program elements and associated outputs recommended for State and local environmental programs.

(b) *Regional guidance to applicants.* Regional guidance is based on Headquarters guidance and the Regional Administrator's knowledge of environmental problems in each State in his region and evaluation of each applicant's ability to carry out the program. The guidance contains EPA's objectives and priorities, the applicant's planning target, the program elements EPA uses for budget justification and management, categories of outputs which should be part of the applicant's work program, and special conditions or limitations relevant to the applicant.

§ 35.130 Work program.

The work program is part of the application for financial assistance and is the basis for the management and evaluation of performance under the assistance award. The work program must specify the work years and amount and source of funding estimated to be needed for each program element, the outputs committed to under each program element, including any outputs required under an authorization or delegation agreement, a schedule for accomplishment of outputs, and an identification of the agency responsible for each of the elements and outputs.

§ 35.135 Budget period.

An applicant may choose its budget period in consultation with and subject to the approval of the Regional Administrator.

§ 35.140 Application for assistance.

Each applicant should submit a complete application at least 60 days before the beginning of the budget period. In addition to meeting the requirements contained in part 30, a complete application must contain a discussion of performance to date under the existing award, the proposed work program, and a list of all applicable EPA-approved State strategies, program plans, and delegation or authorization agreements with a statement certifying that the proposed work program is consistent with them.

§ 35.141 EPA action on application.

The Regional Administrator will review each completed application and should approve, conditionally approve, or disapprove it within 60 days of receipt. When funds are available, the Regional Administrator will award assistance based on an approved or conditionally approved application. For a continuation award made after the beginning of the approved budget period, EPA will reimburse the applicant for allowable costs incurred from the beginning of the budget period, provided that such costs are contained in the approved application and that the application was submitted before the expiration of the prior budget period.

(a) *Approval.* The Regional Administrator will approve the application only if it satisfies the terms, conditions, and limitations of this subpart, 40 CFR part 30, and relevant statutes and program regulations; if the proposed outputs are consistent with EPA guidance or otherwise demonstrated to be necessary and appropriate; and if achievement of the proposed outputs is feasible, considering the applicant's existing problems, past performance, program authority, organization, resources, and procedures.

(b) *Conditional approval.* The Regional Administrator may conditionally approve the application, after consulting with the applicant, if only minor changes are required. The Regional Administrator will include in the award the conditions which the applicant must meet to secure final approval and the date by which those conditions must be met.

(c) *Disapproval.* If the application cannot be approved or conditionally approved, the Regional Administrator will negotiate with the applicant to change the output commitments, to reduce the assistance amount, or to make any other changes necessary for approval. If negotiation fails, the Regional Administrator will disapprove the application in writing.

§ 35.143 Assistance amount.

(a) *Determining the assistance amount.* In determining the amount of assistance to an applicant, the Regional Administrator will consider the State's planning target, the extent to which the applicant's work program is consistent with EPA guidance, and the anticipated cost of the applicant's program relative to the proposed outputs.

(b) *Reduction of assistance amount.* If the Regional Administrator's evaluation of the applicant's work program indicates that the proposed outputs do not justify the level of funding requested, the Regional Administrator will reduce the assistance amount. If the evaluation indicates that the proposed outputs are not consistent with the priorities contained in EPA guidance, the Regional Administrator may reduce the assistance amount.

§ 35.145 Consolidated assistance.

Any applicant eligible to receive and administer funds from more than one assistance program may submit an application for consolidated assistance, following the process described in § 35.140. For consolidated assistance, the applicant prepares a single budget and work program covering all programs included in the application. The consolidated budget must identify each assistance program's funds. The consolidated work program must identify the extent to which each assistance program's funds support each program element. Insular Areas which choose to consolidate program assistance may be exempted from requirements of this subpart in accordance with Title V of Pub. L. 95–134.

§ 35.150 Evaluation of recipient performance.

The Regional Administrator will oversee each recipient's performance

under an assistance agreement. In consultation with the applicant, the Regional Administrator will develop a process for evaluating the recipient's performance. The Regional Administrator will include the schedule for evaluation in the assistance agreement and will evaluate recipient performance and progress toward completing the outputs in the approved work program according to the schedule. The Regional Administrator will provide the evaluation findings to the recipient and will include them in the official assistance file. If the evaluation reveals that the recipient is not achieving one or more of the conditions of the assistance agreement, the Regional Administrator will attempt to resolve the situation through negotiation. If agreement is not reached, the Regional Administrator may impose any of the sanctions in 40 CFR part 30.

§ 35.155 Reallocation.

EPA has responsibility and authority for managing all financial assistance funds effectively. To better achieve the goals of the Clean Water Act, 205(g) reserves which have not been awarded will be returned to the State's construction grant allotment to support eligible construction activities except as provided in paragraph (c) of this section; 205(j) reserves which have not been awarded during the period of availability to the State will be reallotted to other States as construction grant funds. These funds are administered under § 35.2010 of this subchapter and are not available for reallocation under this section. For the other environmental programs, EPA will consider reallocating any unawarded funds to achieve the objectives for which Congress appropriated them.

(a) *Funds remaining after initial award.* Funds remaining in a State's allotment after an initial assistance award and commitment to that State for that year may be awarded by the Regional Administrator to any eligible applicant during the Federal fiscal year. At the end of the year, funds not awarded by the Regional Administrator will be reallocated by the Administrator to accomplish the objectives of that program.

(1) The Regional Administrator may use such funds to make supplementary awards to that State for that program.

(2) Subject to any limitations contained in appropriations acts, the Regional Administrator may use such funds to support a Federal program required by law in that State in the absence of an acceptable State program.

(3) The Regional Administrator may also use such funds to supplement awards for that program to other eligible applicants within the Region.

(b) *Funds available because of no award.* Funds remaining in a State's allotment because there is no assistance award to that State in that year may be used in two ways.

(1) First, subject to any limitations contained in appropriations acts, the Regional Administrator may use such funds to support a Federal program required by law in that State in the absence of an acceptable State program.

(2) Otherwise, the Administrator will reallocate any available program funds to accomplish the objectives of that program.

(c) Public Water System Supervision and Underground Water Source Protection funds reserved for use on Indian lands which are not awarded to specific Indian Tribes by February 1 of a fiscal year, may be reallocated by the Administrator for supplementary awards to eligible Indian Tribes or to EPA regions for purposes of direct implementation on Indian lands.

(d) Beginning in FY 1990, on July 1 of each fiscal year, funds reserved under sections 106, 205(j)(1), 205(j)(5), and 319 of the Clean Water Act for eligible Indian Tribes, which have not been awarded by the Regional Administrator, shall be reallocated nationally by the Administrator for awards to other eligible Indian Tribes. Section 319 and 205(j)(5) funds awarded to an Indian Tribe treated as a State in a fiscal year which are not obligated by the end of the fiscal year shall be available to the Administrator for reallocation to other such Tribes in the following fiscal year.

[47 FR 44954, Oct. 12, 1982, as amended at 53 FR 37409, Sept. 26, 1988; 54 FR 14358, Apr. 11, 1989; 59 FR 13817, Mar. 23, 1994; 60 FR 2881, Jan. 12, 1995]

AIR POLLUTION CONTROL (SECTION 105)

§ 35.200 Purpose.

Section 105 of the Clean Air Act authorizes assistance to State, local, interstate, or intermunicipal air pollution control agencies (as defined in section 302(b) of the Act) to administer programs for the prevention and control of air pollution or implementation of national air quality standards. Associated program regulations are found in 40 CFR parts 50, 51, 52, 58, 60, 61, 62, and 81.

§35.201 Definitions applicable to section 105.

For purposes of section 105 of the Clean Air Act the following definitions are to be used in addition to the definitions in §35.105; except that the definition of ''Recurrent expenditures'' has the meaning set forth below:

Implementing means, within the context of section 105 of the Clean Air Act, as amended, any activity related to planning, developing, establishing, carrying-out, improving, or maintaining programs for the prevention and control of air pollution or implementation of national primary and secondary ambient air quality standards.

Nonrecurrent expenditures means those expenditures which are shown by the recipient to be of a nonrepetitive, unusual, or singular nature such as would not reasonably be expected to recur in the foreseeable future. Costs categorized as nonrecurrent must be approved in the assistance agreement or an amendment thereto. All other approved project costs are deemed to be recurrent.

Recurrent expenditures means those expenses associated with the activities of a continuing environmental program. All expenditures are considered recurrent unless justified by the applicant as nonrecurrent and approved in the assistance award or an amendment thereto.

[60 FR 371, Jan. 4, 1995]

§35.205 Maximum Federal share.

(a) The Regional Administrator may provide state, local, interstate, or intermunicipal agencies up to three-fifths of the approved costs of implementing programs for the prevention and control of air pollution or implementing national primary and secondary ambient air quality standards. Air pollution control agencies currently receiving grants and contributing less than the required minimum of two-fifths of the approved program costs shall have until November 15, 1993 to increase their contribution to the required level.

(b) Subject to the conditions set forth below, the Regional Administrator may, at the request of the Governor of a State or the Governor's designee, or in the case of a local jurisdiction, the authorized local official, waive, for a 1–year period, all or a portion of the cost-sharing requirement of paragraph (a) of this section. The Regional Administrator may renew the waiver for no more than 2 years so long as the total waiver period does not exceed 3 years from the approval date of a state's permit program required under section 502 of the Clean Air Act (Act).

(1) The waiver may be approved on a case-by-case basis and only when a state or local government's nonfederal contribution is reduced below the required two-fifths minimum as a result of the redirection of its nonfederal air resources to meet the requirements of section 502(b) of the Act.

(2) In applying for a waiver the Governor or the Governor's designee, or in the case of a local jurisdiction, the authorized local official, must:

(i) Describe the extent of fiscal and programmatic impact on the agency's section 105 program as a result of the transfer of nonfederal resources to support the program approved by EPA under section 502(b) of the Act.

(ii) Provide documentation of the amount of the cost-sharing shortfall and the programmatic activities that would not be able to be carried out if the section 105 grant is reduced or not awarded as a result of a state or local air pollution control agency's inability to meet the cost-sharing requirements.

(iii) Assure that there is no source of funding that may reasonably be used to meet the cost-sharing requirement for the affected grant budget period; and

(iv) Assure that during the section 105 grant period the non-federal share

of the program costs will not be reduced in an amount greater than that authorized by the waiver.

[60 FR 371, Jan. 4, 1995]

§ 35.210 Maintenance of effort.

(a) To receive funds under section 105, an agency must expend annually for recurrent section 105 program expenditures an amount of non-Federal funds at least equal to such expenditures during the preceding fiscal year, unless the Regional Administrator, after notice and opportunity for a public hearing, determines that the reduction is attributable to a non-selective reduction of the programs of all executive branch agencies of the applicable unit of government. In order for the Regional Administrator to award grants in a timely manner each fiscal year, the Regional Administrator shall compare an agency's proposed expenditure level, as detailed in the agency's application for grant assistance, to that agency's expenditure level in the second preceding fiscal year.

(b) The Regional Administrator will not award section 105 funds unless the applicant provides assurance that the assistance will not supplant non-Federal funds that would otherwise be available for maintaining the section 105 program.

[47 FR 44954, Oct. 12, 1982, as amended at 60 FR 372, Jan. 4, 1995]

§ 35.215 Limitations.

(a) The Regional Administrator will not award section 105 funds to an interstate or intermunicipal agency which does not provide assurance that it can develop a comprehensive plan for the air quality control region which includes representation of appropriate State, interstate, local, and international interests.

(b) The Regional Administrator will not award section 105 funds to a local, interstate, or intermunicipal agency without consulting with the appropriate official designated by the Governor or Governors of the State or States affected.

(c) The Regional Administrator will not disapprove an application for or terminate or annul an award of section 105 funds without prior notice and opportunity for a public hearing in the affected State or in one of the affected States if several are affected.

WATER POLLUTION CONTROL (SECTION 106)

§ 35.250 Purpose.

Sections 106 and 518 of the Clean Water Act authorize assistance to State and interstate agencies (as defined in section 502 of the Act) and to eligible Indian Tribes to administer programs for the prevention, reduction, and elimination of water pollution, including programs for the development and implementation of ground-water protection strategies. Some of these activities may be eligible for funding under section 205 (g) and (j) of that Act. (See §§ 35.300 and 35.350.) Program requirements for water quality planning and management activities are provided in 40 CFR part 35, subpart G.

[47 FR 44954, Oct. 12, 1982, as amended at 54 FR 14358, Apr. 11, 1989; 59 FR 13817, Mar. 23, 1994

§ 35.255 Maintenance of effort.

(a) To receive funds under section 106, any State or interstate agency must expend annually for recurrent section 106 program expenditures an amount of non-Federal funds at least equal to expenditures during the fiscal year ending June 30, 1971.

(b) The maintenance of effort requirement in paragraph (a) of this section shall not apply to eligible Indian Tribes.

[54 FR 14358, Apr. 11, 1989, as amended at 59 FR 13817, Mar. 23, 1994]

§ 35.260 Limitations.

(a) The Regional Administrator will not award section 106 funds to any State which does not monitor and compile, analyze, and report water quality data as described in section 106(e)(1) of the Clean Water Act. The Regional Administrator may award section 106 funds to eligible Indian Tribes even if they do not meet this requirement. However, all monitoring and analysis activities performed by a Tribe must meet the applicable quality assurance, quality control requirements as specified in 40 CFR part 31.

(b) The Regional Administrator will not award section 106 funds to any State, including any eligible Indian Tribe, which does not have authority comparable to that in section 504 of the Clean Water Act and adequate contingency plans to implement such authority.

(c) The Regional Administrator will not award section 106 funds if federally assumed enforcement as defined in section 309(a)(2) of the Clean Water Act is in effect with respect to the agency.

(d) The Regional Administrator will not award section 106 funds unless the work program submitted with the assistance application shows that the activities to be funded are coordinated, as appropriate, with activities proposed for funding under section 205 (g) and (j) of the Clean Water Act.

[47 FR 44954, Oct. 12, 1982, as amended at 54 FR 14358, Apr. 11, 1989; 59 FR 13817, Mar. 23, 1994

§ 35.265 Awards to Indian Tribes.

(a) The Regional Administrator will not award section 106 funds to an Indian Tribe unless EPA has determined that the Indian Tribe meets the requirements set forth at 40 CFR 130.6(d) as well as the applicable limitations in 40 CFR 35.260.

(b) The Regional Administrator will not give a continuation award to any Indian Tribe unless the Tribe shows satisfactory progress in meeting its negotiated milestones and goals.

[54 FR 14358, Apr. 11, 1989, as amended at 59 FR 13817, Mar. 23, 1994]

STATE ADMINISTRATION (SECTION 205(G))

§ 35.300 Purpose.

Section 205(g) of the Clean Water Act authorizes assistance to States (as defined in section 502 of the Act) for two purposes.

(a) *Construction management assistance.* The 205(g) funds may be used for administering elements of the construction grant program under sections 201, 203, 204, and 212 of the Clean Water Act and for managing waste treatment construction grants for small communities. Construction management assistance funds may also be used for administering elements of a State's construction grant program which are implemented without Federal assistance, if the Regional Administrator determines that those elements are consistent with 40 CFR part 35, subpart I. Program requirements for State construction management activities under delegation are provided in 40 CFR part 35, subparts F and I.

(b) *Permit and planning assistance.* The 205(g) funds may be used for administering permit programs under sections 402 and 404 and for administering statewide waste treatment management planning programs under section 208(b)(4) of the Clean Water Act. Some of these activities may be eligible for funding under sections 106 and 205(j) of that Act. (See §§ 35.250 and 35.350.) Program requirements for water quality management activities are provided in 40 CFR part 35, subpart G.

§ 35.305 Maintenance of effort.

To receive funds under section 205(g), a State agency must expend annually for recurrent section 106 program expenditures an amount of non-Federal funds at least equal to such expenditures during fiscal year 1977, unless the Regional Administrator determines that the reduction is attributable to a non-selective reduction of expenditures in State executive branch agencies.

§ 35.310 Limitations.

(a) The Regional Administrator will not award section 205(g) funds for construction management assistance unless there is a signed agreement delegating responsibility for administration of those activities to the State.

(b) The Regional Administrator will not award section 205(g) permit and planning assistance before awarding funds which provide for the management of a substantial portion of construction grants program. The maximum amount of permit and planning assistance a State may receive is the amount remaining in its reserve after the Regional Administrator allows for full funding of the management of the construction grant program under full delegation.

(c) The Regional Administrator will not award section 205(g) permit and planning assistance unless the work program submitted with the assistance application shows that the activities to

be funded are coordinated, as appropriate, with activities proposed for funding under sections 106 and 205(j) of the Clean Water Act.

WATER QUALITY MANAGEMENT PLANNING (SECTION 205(J)(2))

§35.350 Purpose.

Sections 205(j)(2) and 518 of the Clean Water Act authorize assistance to States (as defined in section 502 of the Act) and to eligible Indian Tribes to carry out water quality management planning activities. Some of these activities may be eligible for funding under sections 106 and 205(g) of that Act. (See §§35.250 and 35.300.) Program requirements for water quality management activities are provided in 40 CFR part 35, subpart G. The purpose of 205(j) funds includes, but is not limited to, the following.

(a) Identification of the most cost-effective and locally acceptable facility and nonpoint measures to meet and maintain water quality standards.

(b) Development of an implementation plan to obtain State and local financial and regulatory commitments to implement measures developed under paragraph (a) of this section.

(c) Determination of the nature, extent, and causes of water quality problems in various areas of the State and interstate region.

(d) Determination of those publicly owned treatment works which should be constructed with Federal assistance, in which areas and in what sequence, taking into account the relative degree of effluent reduction attained, the relative contributions to water quality of other point or nonpoint sources, and the consideration of alternatives to such construction.

(e) Implementation of section 303(e) of the Clean Water Act.

[47 FR 44954, Oct. 12, 1982, as amended at 54 FR 14358, Apr. 11, 1989; 59 FR 13817, Mar. 23, 1994]

§35.355 Maximum Federal share.

The Regional Administrator may provide up to one hundred percent of the approved work program costs.

§35.360 Limitations.

(a) The Regional Administrator will not award section 205(j)(1) funds to a State agency unless the agency develops its work program jointly with local, regional, and interstate agencies and gives funding priority to such agencies and designated or undesignated public comprehensive planning organizations to carry out portions of that work program.

(b) The Regional Administrator will not award section 205(j)(1) funds to a State agency which does not report annually on the nature, extent, and causes of water quality problems in various areas of the State and interstate region.

(c) The Regional Administrator will not award section 205(j)(1) funds unless the work program submitted with the assistance application shows that the activities to be funded are coordinated, as appropriate, with activities proposed for funding under sections 106 and 205(g) of the Clean Water Act.

[47 FR 44954, Oct. 12, 1982, as amended at 54 FR 14358, Apr. 11, 1989]

§35.365 Awards to Indian Tribes.

(a)(1) The Regional Administrator will not award section 205(j)(1) funds to an Indian Tribe unless the Tribe meets the requirements set forth at 40 CFR 130.6(d), as well as the applicable limitations in 40 CFR 35.360.

(2) [Reserved]

(b) The Regional Administrator will not give a continuation award to any Indian Tribe unless the Tribe shows satisfactory progress in meeting its negotiated milestones and goals.

[54 FR 14358, Apr. 11, 1989, as amended at 59 FR 13817, Mar. 23, 1994]

PUBLIC WATER SYSTEM SUPERVISION (SECTION 1443(A))

§35.400 Purpose.

Sections 1443(a) and 1451(a)(3) of the Safe Drinking Water Act authorize assistance to States and eligible Indian Tribes under Public Water System Supervision Programs. Associated program regulations are found in 40 CFR parts 141, 142, and 143.

[53 FR 37409, Sept. 26, 1988, as amended at 59 FR 13817, Mar. 23, 1994]

§ 35.405 Maximum Federal share.

(a) The Regional Administrator may provide up to seventy-five percent of the approved work program costs.

(b) The Regional Administrator may increase the 75 percent maximum Federal share for an Indian Tribe based upon application and demonstration by the Tribe that it does not have adequate funds (including Federal funds authorized by statute to be used for matching purposes), Tribal funds, or in-kind contributions to meet the required 25 percent Tribal match. In no case shall the Federal share be greater than 90 percent.

[47 FR 44954, Oct. 12, 1982, as amended at 53 FR 37409, Sept. 26, 1988]

§ 35.410 Limitations.

(a) The Regional Administrator will not make an initial award of section 1443(a) funds unless the applicant has a public water system supervision program or will establish one within a year of the award and will assume primary enforcement responsibility for the State's public water systems within that year.

(b) The Regional Administrator will not award section 1443(a) funds after the initial award unless the applicant has primary enforcement responsibility for the State's public water systems.

(c) The limitations in paragraphs (a) and (b), of this section do not apply to funds allotted to Indian Tribes.

[47 FR 44954, Oct. 12, 1982, as amended at 53 FR 37409, Sept. 26, 1988]

§ 35.415 Indian Tribes.

(a) The Regional Administrator will not award initial section 1443(a) funds to an Indian Tribe unless:

(1) EPA has determined that the Indian Tribe meets the requirements of 40 CFR part 142, subpart H; and

(2) The applicant has a Public Water System Supervision Program or agrees to establish one within three years of the initial award and agrees to assume primary enforcement responsibility within this period. Upon agreement by the applicant, at least one year of the grant funding will be used to demonstrate program capability to implement the requirements found in § 142.10.

(b) The Regional Administrator shall not give a continuation award to any Indian Tribe unless the Tribe can demonstrate reasonable progress towards assuming primary enforcement responsibility within the three-year period.

(c) After the three-year period expires, the Regional Administrator shall not award section 1443(a) funds to an Indian Tribe unless the Tribe has assumed primary enforcement responsibility.

[53 FR 37409, Sept. 26, 1988, as amended at 54 FR 52137, Dec. 20, 1989; 59 FR 13817, Mar. 23, 1994]

UNDERGROUND WATER SOURCE PROTECTION (SECTION 1443(B))

§ 35.450 Purpose.

Section 1443(b) of the Safe Drinking Water Act authorizes assistance to States and eligible Indian Tribes under Underground Water Source Protection Programs. Associated program regulations are found in 40 CFR parts 124, 144, 145, 146, and 147.

[53 FR 37409, Sept. 26, 1988, as amended at 59 FR 13817, Mar. 23, 1994]

§ 35.455 Maximum Federal share.

(a) The Regional Administrator may provide up to seventy-five percent of the approved work program costs.

(b) The Regional Administrator may increase the 75 percent maximum Federal share for an Indian Tribe based upon application and demonstration by the Tribe that it does not have adequate funds (including Federal funds authorized by statute to be used for matching purposes), Tribal funds, or in-kind contributions to meet the required 25 percent match requirement. In no case shall the Federal share be greater than 90 percent.

[47 FR 44954, Oct. 12, 1982, as amended at 53 FR 37409, Sept. 26, 1988]

§ 35.460 Limitations.

After September 30, 1983, the Regional Administrator will not award section 1443(b) funds unless the applicant has primary enforcement responsibility for the Underground Water Source Protection program. The above

limitation shall not apply to funds allotted to Indian Tribes.

[53 FR 37409, Sept. 26, 1988]

§35.465 Indian Tribes.

(a) The Regional Administrator will not award initial section 1443(b) funds to an Indian Tribe unless:

(1) EPA has determined that the Indian Tribe meets the requirements of 40 CFR part 145 subpart E.

(2) The applicant has an Underground Water Source Protection program or agrees to establish one within four years of the initial award and agrees to assume primary enforcement responsibility within this period.

(b) The Regional Administrator shall not give a continuation award to any Indian Tribe unless the Tribe can demonstrate reasonable progress towards assuming primary enforcement responsibility within the four-year period.

(c) After the four-year period expires, the Regional Administrator shall not award section 1443(b) funds to an Indian Tribe unless the Tribe has assumed primary enforcement responsibility.

[53 FR 37409, Sept. 26, 1988, as amended at 59 FR 13817, Mar. 23, 1994]

HAZARDOUS WASTE MANAGEMENT (SECTION 3011)

§35.500 Purpose.

Section 3011(a) of the Solid Waste Disposal Act, as amended, authorizes assistance to States (as defined in section 1004 of the Act) for the development and implementation of authorized State hazardous waste management programs. Associated program regulations are found in 40 CFR parts 122, subparts A and B; 123, subparts A, B, and F; 124, subparts A and B; and 260–266.

§35.505 Maximum Federal share.

The Regional Administrator may provide up to seventy-five percent of the approved work program costs.

§35.510 Limitations.

The Regional Administrator will not award section 3011(a) funds in a State with interim or final hazardous waste authorization unless the applicant is the lead agency designated in the authorization agreement.

PESTICIDE ENFORCEMENT (SECTION 23(A)(1))

§35.550 Purpose.

Section 23(a)(1) of the Federal Insecticide, Fungicide, and Rodenticide Act authorizes assistance to States (as defined in section 2 of the Act) and Indian tribes to implement pesticide enforcement programs. Associated program regulations are found in 40 CFR parts 162, 165–167, 169–170, and 172–173 and 19 CFR part 12.

§35.555 Maximum Federal share.

The Regional Administrator may provide up to one hundred percent of the approved work program costs.

PESTICIDE APPLICATOR CERTIFICATION AND TRAINING (SECTION 23(A)(2))

§35.600 Purpose.

Section 23(a)(2) of the Federal Insecticide, Fungicide, and Rodenticide Act authorizes assistance to States (as defined in section 2 of the Act) and Indian tribes to implement programs to train and certify applicants of restricted use pesticides. Associated program regulations are found in 40 CFR parts 162 and 170–171.

§35.605 Maximum Federal share.

The Regional Administrator may provide up to fifty percent of the approved work program costs.

NONPOINT SOURCE MANAGEMENT (SECTIONS 205(j)(5) AND 319(h))

§35.750 Purpose.

Sections 319 and 518 of the Clean Water Act authorize nonpoint source management assistance to States, including eligible Indian Tribes. Under section 319(h), grants may be awarded for the development of nonpoint source management programs, using funds reserved under section 205(j)(5) of the Act, and for the implementation of EPA-approved management programs using funds reserved under section 205(j)(5) or funds appropriated under section 319. Under section 319(i), grants may be awarded to carry out ground-

water quality protection activities that will advance the implementation of a comprehensive approved nonpoint source management program.

[54 FR 14358, Apr. 11, 1989, as amended at 59 FR 13817, Mar. 23, 1994]

§ 35.755 Awards to Indian Tribes.

(a) No grants for the development of an approved nonpoint source management program will be awarded to an Indian Tribe unless the Regional Administrator determines that the Tribe meets the requirements set forth at 40 CFR 130.6(d).

(b) No funds for the implementation of an approved nonpoint source management program will be awarded to an Indian Tribe unless:

(1) The Regional Administrator determines that the Indian Tribe meets the requirements set forth at 40 CFR 130.6(d).

(2) The Tribe agrees to:

(i) Maintain its aggregate expenditures from all other sources for programs controlling pollution from nonpoint sources and improving the quality of navigable waters within the Tribe's jurisdiction at or above the average levels of such expenditures in the fiscal years 1985 and 1986;

(ii) Limit administrative costs for services provided and charged against activities and programs carried out with a grant under section 319(h) to no more than 10 percent of the amount of the grant in any year, except that costs of implementing enforcement and regulatory activities, education, training, technical assistance, demonstration projects, and technology transfer programs are not subject to this limitation; and

(iii) Provide a matching share in accordance with 40 CFR 35.760;

(iv) Use such funds for financial assistance to persons only to the extent that such assistance is related to the costs of demonstration projects.

(v) Report to the Administrator on an annual basis concerning (A) its progress in meeting the schedule of milestones submitted under section 319(b)(2)(C) of the Act and (B) to the extent that appropriate information is available, reductions in nonpoint source pollutant loading and improvements in water quality for those navigable waters or watersheds within the jurisdiction of the Tribe which were identified under section 319(a)(1)(A) of the Act resulting from implementation of the management program.

(c) No funds to carry out groundwater protection activities under section 319(i) of the Act will be awarded to an Indian Tribe unless:

(1) The Regional Administrator determines that the Tribe meets the requirements for treatment as a State in accordance with 40 CFR 130.6(d) and 130.15; and

(2) The Tribe agrees to provide a matching share in accordance with 40 CFR 35.760.

(d) The Regional Administrator will not give a nonpoint source management continuation award to any Indian Tribe unless the Tribe shows satisfactory progress in meeting its negotiated milestones and goals.

[54 FR 14359, Apr. 11, 1989, as amended at 59 FR 13817, Mar. 23, 1994]

§ 35.760 Maximum Federal share.

(a) The Regional Administrator may provide up to 100 percent of approved work program costs for the development of a nonpoint source management program.

(b) Except as provided in paragraph (c) or (d) of this section, the Regional Administrator may provide to an Indian Tribe up to 60 percent of approved nonpoint source management implementation program costs, and 50 percent of approved ground-water protection program costs, on condition that the non-Federal share is provided from non-Federal sources.

(c) The Regional Administrator may increase the maximum Federal shares upon application and demonstration by the Tribe that it does not have adequate funds (including Federal funds authorized by statute to be used for matching purposes, tribal funds or in-kind contributions) to meet the required match. In no case shall the Federal share be greater than 90 percent.

(d) In any fiscal year, the amount of assistance awarded under section 319 of the Act to any one Indian Tribe treated as a State shall not exceed 15 percent of the section 319(h) reserve for Tribes established under § 35.115(e).

(e) In any fiscal year the amount of assistance awarded to any one Indian Tribe treated as a State under section 319(i), from funds appropriated under section 319(j), shall not exceed $150,000.

[54 FR 14359, Apr. 11, 1989]

Subparts B–D—[Reserved]

Subpart E—Grants for Construction of Treatment Works—Clean Water Act

AUTHORITY: Secs. 109(b), 201 through 205, 207, 208(d), 210 through 212, 215 through 217, 304(d)(3), 313, 501, 502, 511, and 516(b) of the Clean Water Act, as amended, 33 U.S.C. 1251 et seq.

SOURCE: 43 FR 44049, Sept. 27, 1978, unless otherwise noted.

§35.900 Purpose.

(a) This subpart supplements the EPA general grant regulations and procedures (part 30 of this chapter) and establishes policies and procedures for grants to assist in the construction of waste treatment works in compliance with the Clean Water Act.

(b) A number of provisions of this subpart which contained transition dates preceding October 1, 1978, have been modified to delete those dates. However, the earlier requirements remain applicable to grants awarded when those provisions were in effect. The transition provisions in former §§35.905–4, 35.917, and 35.925–18 remain applicable to certain grants awarded through March 31, 1981.

(c) Technical and guidance publications (MCD series) concerning this program which are issued by EPA may be ordered from: General Services Administration (8FFS), Centralized Mailing List Services, Building 41, Denver Federal Center, Denver, Colo. 80225. In order to expedite processing of requests, persons desiring to obtain these publications should request a copy of EPA form 7500–21 (the order form listing all available publications), from EPA Headquarters, Municipal Construction Division (WH–547) or from any regional office of EPA.

§35.901 Program policy.

The primary purpose of Federal grant assistance available under this subpart is to assist municipalities in meeting enforceable requirements of the Act, particularly, applicable national pollution discharge elimination system (NPDES) permit requirements. The Regional Administrator and States are authorized and encouraged to administer this grant program in a manner which will most effectively achieve the enforceable requirements of the Act.

§35.903 Summary of construction grant program.

(a) The construction of federally financed waste treatment works is generally accomplished in three steps: Step 1, facilities plans and related elements; step 2, preparation of construction drawings and specifications; and step 3, building of a treatment works.

(b) The Regional Administrator may award grant assistance for a step 1, step 2, or step 3 project, or, as authorized by §35.909, for a project involving a combination of step 2 and step 3 (step 2+3 grant). For a step 1, step 2, or step 3 grant award, a ''project'' may consist of an entire step or any ''treatment works segment'' (see §35.905) of construction within a step. In the case of step 2+3 grant awards, a project must consist of all associated step 2 and step 3 work; segmenting is not permitted.

(c) Grants are awarded from State allocations (see §35.910 *et seq.*) under the Act. No grant assistance may be awarded unless priority for a project has been determined in accordance with an approved State priority system under §35.915. The State is responsible for determining the amount and timing of Federal assistance to each municipality for which treatment works funding is needed.

(d) An applicant will initially define the scope of a project. The State may revise this initial project scope when priority for the project is established. The Regional Administrator will make the final determination of project scope when grant assistance is awarded (see §35.930–4).

(e) For each proposed grant, an applicant must first submit his application to the State agency. The basic grant

application must meet the requirements for the project in § 35.920–3. If grant assistance for subsequent related projects is necessary, the grantee shall make submissions in the form of amendments to the basic application. The State agency will forward to the appropriate EPA Regional Administrator complete project applications or amendments to them for which the State agency has determined priority. The grant will consist of the grant agreement resulting from the basic application and grant amendments awarded for subsequent related projects.

(f) Generally, grant assistance for projects involving step 2 or 3 will not be awarded unless the Regional Administrator first determines that the facilities planning requirements of §§ 35.917 to 35.917–9 of this subpart have been met. Facilities planning may not be initiated prior to approval of a step 1 grant or written approval of a ''plan of study'' accompanied by a reservation of funds (see § 35.925–18 and definition of ''construction'' in § 35.905).

(g) If initiation of step 1, 2, or 3 construction (see definition of ''construction'' in § 35.905) occurs before grant award, costs incurred before the approved date of initiation of construction will not be paid and award will not be made except under the circumstances in § 35.925–18.

(h) The Regional Administrator may not award grant assistance unless the application meets the requirements of § 35.920–3 and he has made the determinations required by § 35.925 *et seq.*

(i) A grant or grant amendment awarded for a project under this subpart shall constitute a contractual obligation of the United States to pay the Federal share of allowable project costs up to the amount approved in the grant agreement (including amendments) in accordance with § 35.930–6. However, this obligation is subject to the grantee's compliance with the conditions of the grant (see § 35.935 *et seq.*) and other applicable requirements of this subpart.

(j) Sections 35.937–10, 35.938–6 and 35.945 authorize prompt payment for project costs which have been incurred. The initial request for payment may cover the Federal share of allowable costs incurred before the award except as otherwise provided in § 35.925–18. Before the award of such assistance, the applicant must claim in the application for grant assistance for that project all allowable costs incurred before initiation of project construction. An applicant may make no subsequent claim for payment for such costs. The estimated amount of any grant or grant amendment, including any prior costs, must be established in conjunction with determination of priority for the project. The Regional Administrator must determine that the project costs are allowable under § 35.940 *et seq.*

(k) Under section 204(b) of the Act, the grantee must comply with applicable user charge and industrial cost recovery requirements; see §§ 35.925–11, 35.928 *et seq.*, 35.929 *et seq.*, 35.935–13, 35.935–15, and appendix B to this subpart.

(l) The costs of sewage collection systems for new communities, new subdivisions, or newly developed urban areas should be included as part of the development costs of the new construction in these areas. Under section 211 of the Act, such costs will not be allowed under the construction grant program; see § 35.925–13.

(m) The approval of a plan of study for step 1, a facilities plan, or award of grant assistance for step 1, step 2, or step 3, or any segment thereof, will not constitute a Federal commitment for grant assistance for any subequent project.

(n) Where justified, a deviation from any substatutory requirement of this subpart may be granted under § 30.1000 of this chapter.

(o) The Act requires EPA and the States to provide for, encourage and assist public participation in the Construction Grants Program. This requirement for public participation applies to the development of the State water pollution control strategy, the State project priority system, and the State project priority list, under § 35.915; to the development of user charge and industrial cost recovery systems, under §§ 35.925.11, 35.928, and 35.929; and to the delegation of administrative responsibilities for the Construction Grants Program under subpart F of this chapter.

(p) Requirements regarding the award and administration of subagreements are set forth in §§35.935 through 35.939.

[43 FR 44049, Sept. 27, 1978, as amended at 44 FR 10302, Feb. 16, 1979]

§35.905 Definitions.

As used in this subpart, the following words and terms mean:

Act. The Clean Water Act (33 U.S.C. 1251 *et seq.*, as amended).

Ad valorem tax. A tax based upon the value of real property.

Combined sewer. A sewer intended to serve as a sanitary sewer and a storm sewer, or as an industrial sewer and a storm sewer.

Complete waste treatment system. A complete waste treatment system consists of all the treatment works necessary to meet the requirements of title III of the Act, involved in: (a) The transport of waste waters from individual homes or buildings to a plant or facility where treatment of the waste water is accomplished; (b) the treatment of the waste waters to remove pollutants; and (c) the ultimate disposal, including recycling or reuse, of the treated waste waters and residues which result from the treatment process. One complete waste treatment system would, normally, include one treatment plant or facility, but also includes two or more connected or integrated treatment plants or facilities.

Construction. Any one or more of the following: Preliminary planning to determine the feasibility of treatment works, engineering, architectural, legal, fiscal, or economic investigations or studies, surveys, designs, plans, working drawings, specifications, procedures, or other necessary actions, erection, building, acquisition, alteration, remodeling, improvement, or extension of treatment works, or the inspection or supervision of any of the foregoing items. The phrase *initiation of construction*, as used in this subpart means with reference to a project for:

(a) *Step 1:* The approval of a plan of study (see §§35.920–3(a)(1) and 35.925–18(a));

(b) *Step 2:* The award of a step 2 grant;

(c) *Step 3:* Issuance of a notice to proceed under a construction contract for any segment of step 3 project work or, if notice to proceed is not required, execution of the construction contract.

Enforceable requirements of the Act. Those conditions or limitations of section 402 or 404 permits which, if violated, could result in the issuance of a compliance order or initiation of a civil or criminal action under section 309 of the Act. If a permit has not been issued, the term shall include any requirement which, in the Regional Administrator's judgment, would be included in the permit when issued. Where no permit applies, the term shall include any requirement which the Regional Administrator determines is necessary to meet applicable criteria for best practicable waste treatment technology (BPWTT).

Excessive infiltration/inflow. The quantities of infiltration/inflow which can be economically eliminated from a sewerage system by rehabilitation, as determined in a cost-effectiveness analysis that compares the costs for correcting the infiltration/inflow conditions to the total costs for transportation and treatment of the infiltration/inflow, subject to the provisions in §35.927.

Industrial cost recovery. (a) The grantee's recovery from the industrial users of a treatment works of the grant amount allocable to the treatment of waste from such users under section 204(b) of the Act and this subpart.

(b) The grantee's recovery from the commercial users of an individual system of the grant amount allocable to the treatment of waste from such users under section 201(h) of the Act and this subpart.

Industrial cost recovery period. That period during which the grant amount allocable to the treatment of wastes from industrial users is recovered from the industrial users of such works.

Industrial user. (a) Any nongovernmental, nonresidential user of a publicly owned treatment works which discharges more than the equivalent of 25,000 gallons per day (gpd) of sanitary wastes and which is identified in the Standard Industrial Classification Manual, 1972, Office of Management and Budget, as amended and supplemented under one of the following divisions:

Division A. Agriculture, Forestry, and Fishing.

Division B. Mining.

Division D. Manufacturing.

Division E. Transportation, Communications, Electric, Gas, and Sanitary Services.

Division I. Services.

(1) In determining the amount of a user's discharge for purposes of industrial cost recovery, the grantee may exclude domestic wastes or discharges from sanitary conveniences.

(2) After applying the sanitary waste exclusion in paragraph (b)(1) of this section (if the grantee chooses to do so), dischargers in the above divisions that have a volume exceeding 25,000 gpd or the weight of biochemical oxygen demand (BOD) or suspended solids (SS) equivalent to that weight found in 25,000 gpd of sanitary waste are considered industrial users. Sanitary wastes, for purposes of this calculation of equivalency, are the wastes discharged from residential users. The grantee, with the Regional Administrator's approval, shall define the strength of the residential discharges in terms of parameters including, as a minimum, BOD and SS per volume of flow.

(b) Any nongovernmental user of a publicly owned treatment works which discharges waste water to the treatment works which contains toxic pollutants or poisonous solids, liquids, or gases in sufficient quantity either singly or by interaction with other wastes, to contaminate the sludge of any municipal systems, or to injure or to interfere with any sewage treatment process, or which constitutes a hazard to humans or animals, creates a public nuisance, or creates any hazard in or has an adverse effect on the waters receiving any discharge from the treatment works.

(c) All commercial users of an individual system constructed with grant assistance under section 201(h) of the Act and this subpart. (See § 35.918(a)(3).)

Infiltration. Water other than waste water that enters a sewerage system (including sewer service connections) from the ground through such means as defective pipes, pipe joints, connections, or manholes. Infiltration does not include, and is distinguished from, inflow.

Infiltration/inflow. The total quantity of water from both infiltration and inflow without distinguishing the source.

Inflow. Water other than waste water that enters a sewerage system (including sewer service connections) from sources such as roof leaders, cellar drains, yard drains, area drains, foundation drains, drains from springs and swampy areas, manhole covers, cross connections between storm sewers and sanitary sewers, catch basins, cooling towers, storm waters, surface runoff, street wash waters, or drainage. Inflow does not include, and is distinguished from, infiltration.

Interceptor sewer. A sewer whose primary purpose is to transport waste waters from collector sewers to a treatment facility.

Interstate agency. An agency of two or more States established under an agreement or compact approved by the Congress, or any other agency of two or more States, having substantial powers or duties pertaining to the control of water pollution.

Municipality. A city, town, borough, county, parish, district, association, or other public body (including an intermunicipal agency of two or more of the foregoing entities) created under State law, or an Indian tribe or an authorized Indian tribal organization, having jurisdiction over disposal of sewage, industrial wastes, or other waste, or a designated and approved management agency under section 208 of the Act.

(a) This definition includes a special district created under State law such as a water district, sewer district, sanitary district, utility district, drainage district, or similar entity or an integrated waste management facility, as defined in section 201(e) of the Act, which has as one of its principal responsibilities the treatment, transport, or disposal of liquid wastes of the general public in a particular geographic area.

(b) This definition excludes the following:

(1) Any revenue producing entity which has as its principal responsibility an activity other than providing waste water treatment services to the general public, such as an airport, turnpike, port facility, or other municipal utility.

(2) Any special district (such as school district or a park district) which has the responsibility to provide waste water treatment services in support of its principal activity at specific facilities, unless the special district has the responsibility under State law to provide waste water treatment services to the community surrounding the special district's facility and no other municipality, with concurrent jurisdiction to serve the community, serves or intends to serve the special district's facility or the surrounding community.

Operable treatment works. An operable treatment works is a treatment works that:

(a) Upon completion of construction will treat waste water, transport waste water to or from treatment, or transport and dispose of waste water in a manner which will significantly improve an objectionable water quality situation or health hazard, and

(b) Is a component part of a complete waste treatment system which, upon completion of construction for the complete waste treatment system (or completion of construction of other treatment works in the system in accordance with a schedule approved by the Regional Administrator) will comply with all applicable statutory and regulatory requirements.

Project. The scope of work for which a grant or grant amendment is awarded under this subpart. The scope of work is defined as step 1, step 2, or step 3 of treatment works construction or segments (see definition of *treatment works segment* and § 35.930–4).

Replacement. Expenditures for obtaining and installing equipment, accessories, or appurtenances which are necessary during the useful life of the treatment works to maintain the capacity and performance for which such works were designed and constructed. The term *operation and maintenance* includes replacement.

Sanitary sewer. A sewer intended to carry only sanitary or sanitary and industrial waste waters from residences, commercial buildings, industrial plants, and institutions.

Sewage collection system. For the purpose of § 35.925–13, each, and all, of the common lateral sewers, within a publicly owned treatment system, which are primarily installed to receive waste waters directly from facilities which convey waste water from individual structures or from private property, and which include service connection ''Y'' fittings designed for connection with those facilities. The facilities which convey waste water from individual structures, from private property to the public lateral sewer, or its equivalent, are specifically excluded from the definition, with the exception of pumping units, and pressurized lines, for individual structures or groups of structures when such units are cost effective and are owned and maintained by the grantee.

State. A State, the District of Columbia, the Commonwealth of Puerto Rico, the Virgin Islands, Guam, American Samoa, the Trust Territory of the Pacific Islands, and the Commonwealth of the Northern Marianas.

State agency. The State water pollution control agency designated by the Governor having responsibility for enforcing State laws relating to the abatement of pollution.

Storm sewer. A sewer intended to carry only storm waters, surface runoff, street wash waters, and drainage.

Treatment works. Any devices and systems for the storage, treatment, recycling, and reclamation of municipal sewage, domestic sewage, or liquid industrial wastes used to implement section 201 of the Act, or necessary to recycle or reuse water at the most economical cost over the useful life of the works. These include intercepting sewers, outfall sewers, sewage collection systems, individual systems, pumping, power, and other equipment and their appurtenances; extensions, improvement, remodeling, additions, and alterations thereof; elements essential to provide a reliable recycled supply such as standby treatment units and clear well facilities; and any works, including site acquisition of the land that will be an integral part of the treatment process or is used for ultimate disposal of residues resulting from such treatment (including land for composting sludge, temporary storage of such compost, and land used for the storage of treated waste water in land treatment systems before land application); or any other method or system

for preventing, abating, reducing, storing, treating, separating, or disposing of municipal waste or industrial waste, including waste in combined storm water and sanitary sewer systems.

Treatment works segment. A treatment works segment may be any portion of an operable treatment works described in an approved facilities plan, under § 35.917, which can be identified as a contract or discrete subitem or subcontract for step 1, 2, or 3 work. Completion of construction of a treatment works segment may, but need not, result in an operable treatment works.

Useful life. Estimated period during which a treatment works will be operated.

User charge. A charge levied on users of a treatment works, or that portion of the ad valorem taxes paid by a user, for the user's proportionate share of the cost of operation and maintenance (including replacement) of such works under sections 204(b)(1)(A) and 201(h)(2) of the Act and this subpart.

Value engineering (VE). A specialized cost control technique which uses a systematic and creative approach to identify and to focus on unnecessarily high cost in a project in order to arrive at a cost saving without sacrificing the reliability or efficiency of the project.

§ 35.907 Municipal pretreatment program.

(a) The Regional Administrator is authorized to provide grant assistance for the development of an approvable municipal pretreatment program as required by part 403 of this chapter in conjunction with a step 1, step 2, or step 3 project.

(b) The grantee is required to develop a pretreatment program if the Regional Administrator determines that:

(1) The municipal treatment works:

(i) Serves industries subject to proposed or promulgated pretreatment standards under section 307(b) of the Act, or

(ii) Expects to serve industries connecting into the works in accordance with section 301(i)(2), where these industries are subject to the section 307 (b) or (c) standards: and

(2) A work plan under a section 208 planning grant has not provided for the development of a program approvable under part 403 of this chapter.

(c) A pretreatment program may be required for municipal treatment works which receive other nondomestic wastes covered by guidance issued under section 304(g) of the Act.

(d) Development of an approvable municipal pretreatment program under part 403 of this chapter shall include:

(1) An industrial survey as required by § 403.8 of this chapter including identification of system users, the character and volume of pollutants discharged, type of industry, location (see paragraph (f) of this section);

(2) An evaluation of legal authority, including adequacy of enabling legislation, and selection of mechanisms to be used for control and enforcement (e.g., ordinance, joint powers agreement, contract);

(3) An evaluation of financial programs and revenue sources to insure adequate funding to carry out the pretreatment program;

(4) A determination of technical information necessary to support development of an industrial waste ordinance or other means of enforcing pretreatment standards;

(5) Design of a monitoring enforcement program;

(6) A determination of pollutant removals in existing treatment works;

(7) A determination of the treatment works tolerance to pollutants which interfere with its operation, sludge use, or disposal;

(8) A determination of required monitoring equipment for the municipal treatment works;

(9) A determination of municipal facilities to be constructed for monitoring or analysis of industrial waste.

(e) Items (d) (6) and (7) of this section are grant eligible if necessary for the proper design or operation of the municipal treatment works but are not grant eligible when performed solely for the purpose of seeking an allowance for removal of pollutants under § 403.7 of this chapter.

(f) Information concerning the character and volume of pollutants discharged by industry to a municipal treatment works is to be provided to the municipality by the industrial discharger under paragraph (d)(1) of this

section. However, the costs of a limited amount of end-of-pipe sampling and associated analysis of industrial discharges to a municipal treatment works properly allocable to the municipality are allowable if the grantee obtains the prior written approval of the Regional Administrator; see §35.940–3(f).

(g) The pretreatment program developed under paragraph (b) of this section is subject to the Regional Administrator's approval under §35.935–19 and must be implemented in accordance with part 403 of this chapter.

§35.908 Innovative and alternative technologies.

(a) *Policy*. EPA's policy is to encourage and, where possible, to assist in the development of innovative and alternative technologies for the construction of waste water treatment works. Such technologies may be used in the construction of waste water treatment works under this subpart as §35.915–1, §35.930–5, appendix E, and this section provide. New technology or processes may also be developed or demonstrated with the assistance of EPA research or demonstration grants awarded under Title I of the Act (see part 40 of this subchapter).

(b) *Funding for innovative and alterative technologies*. (1) Projects or portions of projects which the Regional Administrator determines meet criteria for innovative or alternative technologies in appendix E may receive 85-percent grants (see §35.930–5).

(i) Only funds from the reserve in §35.915–1(b) shall be used to increase these grants from 75 to 85 percent.

(ii) Funds for the grant increase shall be distributed according to the chronological approval of grants, unless the State and the Regional Administrator agree otherwise.

(iii) The project must be on the fundable portion of the State project priority list.

(iv) If the project is an alternative to conventional treatment works for a small community (a municipality with a population of 3,500 or less or a highly dispersed section of a larger municipality, as defined by the Regional Administrator), funds from the reserve in §35.915(e) may be used for the 75 percent portion of the Federal grant.

(v) Only if sewer related costs qualify as alternatives to conventional treatment works for small communities are they entitled to the grant increase from 75 to 85 percent, either as part of the entire treatment works or as components.

(2) A project or portions of a project may be designated innovative or alternative on the basis of a facilities plan or on the basis of plans and specifications. A project that has been designated innovative on the basis of the facilities plan may lose that designation if plans and specifications indicate that it does not meet the appropriate criteria stated in section 6 of appendix E.

(3) Projects or portions of projects that receive step 2, step 3, or step 2+3 grant awards after December 27, 1977, from funds allotted or reallotted in fiscal year 1978 may also receive the grant increase from funds allotted for fiscal year 1979 for eligible portions that meet the criteria for alternative technologies in appendix E, if funds are available for such purposes under §35.915–1(b).

(c) *Modification or replacement of innovative and alternative projects*. The Regional Administrator may award grant assistance to fund 100 percent of the eligible costs of the modification or replacement of any treatment works constructed with 85-percent grant assistance if:

(1) He determines that:

(i) The facilities have not met design performance specifications (unless such failure is due to any person's negligence);

(ii) Correction of the failure requires significantly increased capital or operating and maintenance expenditures; and

(iii) Such failure has occurred within the 2-year period following final inspection; and

(2) The replacement or modification project is on the fundable portion of the State's priority list.

(d) *Sole source procurement*. A determination by the Regional Administrator under this section that innovative criteria have been met will serve

as the basis for sole source procurement (see § 35.936–13(b)) for step 3, if appropriate, to achieve the objective of demonstrating innovative technology.

§ 35.909 Step 2+3 grants.

(a) *Authority.* The Regional Administrator may award grant assistance for a step 2+3 project for the combination of design (step 2) and construction (step 3) of a waste water treatment works.

(b) *Limitations.* The Regional Administrator may award step 2+3 grant assistance only if he determines that:

(1) The population is 25,000 or less for the applicant municipality (according to most recent U.S. Census information or disaggregations thereof);

(2) The treatment works has an estimated total step 3 construction cost of $2 million or less, as determined by the Regional Administrator. For any State that the Assistant Administrator for Water and Waste Management finds to have unusually high costs of construction, the Regional Administrator may make step 2+3 awards where the estimated total step 3 construction costs of such treatment works does not exceed $3 million. The project must consist of all associated step 2 and step 3 work; segmenting is not permitted; and

(3) The fundable range of the approved project priority list includes the step 2 and step 3 work.

(c) *Application requirements.* Step 2+3 projects are subject to all requirements of this subpart that apply to separate step 2 and step 3 projects except compliance with § 35.920–3(c) is not required before grant award. An applicant should only submit a single application.

(d) *Cross references.* See §§ 35.920–3(d) (contents of application), 35.930–1(a)(4) (types of projects) and 35.935–4 (grant conditions).

§ 35.910 Allocation of funds.

§ 35.910–1 Allotments.

Allotments are made on a formula or other basis which Congress specifies for each fiscal year. Except where Congress indicates the exact amount of funds which each State should receive, computation of a State's ratio will be carried out to the nearest ten-thousandth percent (0.0001 percent). Unless regulations for allotments for a specific fiscal year otherwise specify, alloted amounts will be rounded to the nearest thousand dollars.

§ 35.910–2 Period of availability; reallotment.

(a) All sums allotted under § 35.910–5 shall remain available for obligation within that State until September 30, 1978. Such funds which remain unobligated on October 1, 1978, will be immediately reallotted in the same manner as sums under paragraph (b) of this section.

(b) All other sums allotted to a State under section 207 of the Act shall remain available for obligation until the end of 1 year after the close of the fiscal year for which the sums were authorized. Sums not obligated at the end of that period shall be immediately reallotted on the basis of the same ratio as applicable to sums allotted for the then-current fiscal year, but none of the funds reallotted shall be made available to any State which failed to obligate any of the funds being reallotted. Any sum made available to a State by reallotment under this section shall be in addition to any funds otherwise allotted to such State for grants under this subpart during any fiscal year.

(c) Sums which are deobligated after the reallotment date for those funds shall be treated in the same manner as the most recent allotment before the deobligation.

§§ 35.910–3—35.910–4 [Reserved]

§ 35.910–5 Additional allotments of previously withheld sums.

(a) A total sum of $9 billion is allotted from sums authorized, but initially unallotted, for fiscal years 1973, 1974, and 1975. This additional allotment shall be available for obligation through September 30, 1977, before reallotment of unobligated sums under § 35.910–2.

(b) Two-thirds of the sum hereby allotted ($6 billion) represents the initially unallotted portion of the amounts authorized for fiscal years 1973 and 1974. Therefore, the portion of the additional allotments derived from this sum were computed by applying

the percentages formerly set forth in § 35.910–3(b) to the total sums authorized for fiscal years 1973 and 1974 ($11 billion) and subtracting the previously allotted sums, formerly set forth in § 35.910–3(c).

(c) One-third of the sum hereby allotted ($3 billion) represents the initially unallotted portion of the amounts authorized for fiscal year 1975. Therefore, the portion of the additional allotments derived from this sum were computed in a three-step process: First, by applying the percentages set forth in § 35.910–4(b) to the total sums authorized for fiscal year 1975 ($7 billion); then, by making adjustments necessary to assure that no State's allotment of such sums fell below its fiscal year 1972 allotment, under Pub. L. 93–243; and, finally, by subtracting the previously allotted sums set forth in § 35.910–4(c).

(d) Based upon the computations set forth in paragraphs (b) and (c) of this section, the total additional sums hereby allotted to the States are as follows:

State	Allotment
Alabama	$43,975,950
Alaska	25,250,500
Arizona	18,833,450
Arkansas	39,822,700
California	945,776,800
Colorado	43,113,300
Connecticut	155,091,800
Delaware	56,394,900
District of Columbia	72,492,000
Florida	345,870,100
Georgia	117,772,800
Hawaii	51,903,300
Idaho	19,219,100
Illinois	571,698,400
Indiana	251,631,800
Iowa	100,044,900
Kansas	53,794,200
Kentucky	90,430,800
Louisiana	71,712,250
Maine	78,495,200
Maryland	297,705,300
Massachusetts	295,809,100
Michigan	625,991,900
Minnesota	172,024,500
Mississippi	38,735,200
Missouri	157,471,200
Montana	12,378,200
Nebraska	38,539,500
Nevada	31,839,800
New Hampshire	77,199,350
New Jersey	660,830,500
New Mexico	15,054,900
New York	1,046,103,500
North Carolina	110,345,000
North Dakota	2,802,000
Ohio	497,227,400
Oklahoma	64,298,700
Oregon	77,582,900
Pennsylvania	498,984,900
Rhode Island	45,599,600
South Carolina	82,341,900
South Dakota	5,688,000
Tennessee	107,351,400
Texas	174,969,850
Utah	21,376,500
Vermont	22,506,600
Virginia	251,809,000
Washington	103,915,600
West Virginia	59,419,900
Wisconsin	145,327,400
Wyoming	2,930,650
Guam	6,399,200
Puerto Rico	84,910,500
Virgin Islands	7,794,800
American Samoa	738,200
Trust Territory of Pacific	2,672,800
Total	9,000,000,000

§ 35.910–6 Fiscal year 1977 public works allotments.

(a) The $480 million appropriated by Public Law 94–447, 90 Stat. 1498, is available for obligation under the authority of title III of the Public Works Employment Act of 1976 (Pub. L. 94–369, 90 Stat. 999), as provided by section 301 of Public Law 94–369, to carry out title II of the Clean Water Act (other than sections 206, 208, and 209). Allotments of these funds shall remain available until expended. Amounts allotted are in addition to the State's last allotment under the Clean Water Act and are to be used for the same purpose.

(b) The sum of $480 million has been allotted to States identified in column 1 of the Table IV of the House Public Works and Transportation Committee print numbered 94–25 based on percentages shown in column 5 of that table.

(c) The percentages referred to in paragraph (b) of this section and used in computing the State allotments set forth in paragraph (d) of this section are as follows:

State	Percent
Alabama	4.90
Alaska	.91
Arizona	4.69
Arkansas	3.74
California	0
Colorado	3.04
Connecticut	0
Delaware	0
District of Columbia	0
Florida	2.97
Georgia	5.70
Hawaii	.60
Idaho	1.06
Illinois	0
Indiana	0
Iowa	.37

State	Percent
Kansas	2.90
Kentucky	2.70
Louisiana	3.51
Maine	0
Maryland	1.51
Massachusetts	0
Michigan	0
Minnesota	0
Mississippi	2.65
Missouri	1.47
Montana	.63
Nebraska	.77
Nevada	.13
New Hampshire	0
New Jersey	0
New Mexico	1.13
New York	0
North Carolina	6.65
North Dakota	1.06
Ohio	0
Oklahoma	3.64
Oregon	.28
Pennsylvania	0
Rhode Island	0
South Carolina	2.92
South Dakota	.89
Tennessee	3.01
Texas	18.46
Utah	1.86
Vermont	0
Virginia	0
Washington	2.49
West Virginia	7.14
Wisconsin	2.65
Wyoming	.91
Guam	.30
Puerto Rico	1.22
Virgin Islands	0
American Samoa	.16
Trust Territory of Pacific	.98
Total	100.00

(d) Based on these percentages, the total additional sums hereby allotted to the States are as follows:

State	Allotments from funds appropriated under Public Law 94–447
Alabama	$23,520.000
Alaska	4,368,000
Arizona	22,512,000
Arkansas	17,952,000
California	0
Colorado	14,592,000
Connecticut	0
Delaware	0
District of Columbia	0
Florida	14,256,000
Georgia	27,360,000
Hawaii	2,880,000
Idaho	5,088,000
Illinois	0
Indiana	0
Iowa	1,776,000
Kansas	13,920,000
Kentucky	12,960,000
Louisiana	16,848,000
Maine	0
Maryland	7,248,000
Massachusetts	0
Michigan	0
Minnesota	0
Mississippi	12,720,000
Missouri	7,056,000
Montana	3,024,000
Nebraska	3,696,000
Nevada	624,000
New Hampshire	0
New Jersey	0
New Mexico	5,424,000
New York	0
North Carolina	31,920,000
North Dakota	5,088,000
Ohio	0
Oklahoma	17,472,000
Oregon	1,344,000
Pennsylvania	0
Rhode Island	0
South Carolina	14,016,000
South Dakota	4,272,000
Tennessee	14,448,000
Texas	88,608,000
Utah	8,928,000
Vermont	0
Virginia	0
Washington	11,952,000
West Virginia	34,272,000
Wisconsin	12,720,000
Wyoming	4,368,000
Guam	1,440,000
Puerto Rico	5,856,000
Virgin Islands	0
American Samoa	768,000
Trust Territory of Pacific	4,704,000
Total	480,000,000

§ 35.910–7 Fiscal Year 1977 Supplemental Appropriations Act allotments.

(a) Under title I, chapter V of Public Law 95–26, $1 billion is available for obligation. The allotments are to be used to carry out title II of the Act, excluding sections 206, 208, and 209. These allotments are available until expended but must be obligated by May 3, 1980. After that date, unobligated balances will be subject to reallotment under section 205 (b) of the Act (see § 35.910–2 (b)).

(b) The allotments, computed by proportionally adjusting the table on page 16 of Senate Report No. 95–38, are based on the following four factors:

(1) 25 percent on the States estimated 1975 census population;

(2) 50 percent on each State's partial needs, i.e., on the cost of needed facilities in categories I, II, and IVB (secondary treatment, more stringent

treatment required to meet water quality standards, and interceptor sewers and pumping stations), as shown in table IV of the May 6, 1975, EPA report, ''cost Estimates for Construction of Publicly Owned Waste Water Treatment Facilities—1974 Needs Survey'';

(3) 25 percent on each State's full needs, i.e., on the cost of needed facilities in categories I, II, IIIA, IIIB, IVA, IVB, and V (secondary treatment, more stringent treatment required to meet water quality standards, infiltration and inflow correction, major sewer system rehabilitation, collector sewers, interceptor sewers, and pumping stations, and treatment of combined sewer overflows), as shown in table V of the EPA report noted in paragraph (b) (2) of this section; and

(4) An allotment adjustment to insure that no State receives less than the one-third of 1 percent of the total amount allocated.

(c) Based on paragraph (b) of this section, the total additional sums hereby allotted to the States are as follows:

State	Allotment
Alabama	$10,906,000
Alaska	4,759,000
Arizona	6,345,000
Arkansas	10,807,000
California	82,391,000
Colorado	8,031,000
Connecticut	12,195,000
Delaware	3,966,000
District of Columbia	3,966,000
Florida	35,792,000
Georgia	19,929,000
Hawaii	6,940,000
Idaho	4,065,000
Illinois	52,151,000
Indiana	21,713,000
Iowa	11,005,000
Kansas	12,195,000
Kentucky	14,971,000
Louisiana	12,493,000
Maine	5,453,000
Maryland	37,874,000
Massachusetts	27,662,000
Michigan	46,897,000
Minnesota	15,070,000
Mississippi	7,535,000
Missouri	19,830,000
Montana	3,272,000
Nebraska	6,147,000
Nevada	3,272,000
New Hampshire	6,742,000
New Jersey	47,591,000
New Mexico	3,272,000
New York	105,294,000
North Carolina	20,722,000
North Dakota	3,272,000
Ohio	55,522,000
Oklahoma	13,484,000
Oregon	8,328,000
Pennsylvania	46,698,000
Rhode Island	3,966,000
South Carolina	13,088,000
South Dakota	3,272,000
Tennessee	14,872,000
Texas	43,030,000
Utah	5,057,000
Vermont	3,272,000
Virginia	22,011,000
Washington	15,368,000
West Virginia	21,614,000
Wisconsin	19,929,000
Wyoming	3,272,000
Guam	992,000
Puerto Rico	8,923,000
Virgin Islands	496,000
American Samoa	298,000
Trust Territory of Pacific	1,983,000
Total	1,000,000,000

§ 35.910–8 Allotments for fiscal years 1978–1981.

(a) Unless later legislation requires otherwise, for each of the fiscal years 1978–1981, all funds appropriated under authorizations in section 207 of the Act will be distributed among the States based on the following percentages drawn from table 3 of Committee print numbered 95–30 of the Committee on Public Works and Transportation of the House of Representatives:

State	Percentage
Alabama	1.2842
Alaska	.4235
Arizona	.7757
Arkansas	.7513
California	7.9512
Colorado	.9187
Connecticut	1.1072
Delaware	.3996
District of Columbia	.3193
Florida	3.8366
Georgia	1.9418
Hawaii	.7928
Idaho	.4952
Illinois	5.1943
Indiana	2.7678
Iowa	1.2953
Kansas	.8803
Kentucky	1.4618
Louisiana	1.2625
Maine	.7495
Maryland	2.7777
Massachusetts	2.9542
Michigan	4.1306
Minnesota	1.8691
Mississippi	.9660
Missouri	2.4957
Montana	.3472
Nebraska	.5505
Nevada	.4138
New Hampshire	.8810
New Jersey	3.5715
New Mexico	.3819
New York	10.6209
North Carolina	1.9808

State	Percentage
North Dakota	.3107
Ohio	6.4655
Oklahoma	.9279
Oregon	1.2974
Pennsylvania	4.3616
Rhode Island	.5252
South Carolina	1.1766
South Dakota	.3733
Tennessee	1.5486
Texas	4.3634
Utah	.4457
Vermont	.3845
Virginia	1.9602
Washington	1.7688
West Virginia	1.7903
Wisconsin	1.9503
Wyoming	.3003
Guam	.0744
Puerto Rico	1.1734
Virgin Islands	.0378
American Samoa	.0616
Trust Territory of Pacific	.1530
Total	100.00

(b) Based on paragraph (a) of this section, and table 4 of the committee print, the following authorizations are allotted among the States subject to the limitations of paragraph (c) of this section:

State	For fiscal year 1978	For each of the fiscal years 1979, 1980, 1981
Alabama	$57,789,000	$64,210,000
Alaska	19,057,500	21,175,000
Arizona	34,906,500	38,785,000
Arkansas	33,808,500	37,565,000
California	357,804,000	397,560,000
Colorado	41,341,500	45,935,000
Connecticut	49,824,000	55,360,000
Delaware	17,982,000	19,980,000
District of Columbia	14,368,500	15,965,000
Florida	172,647,000	191,830,000
Georgia	87,381,000	97,090,000
Hawaii	35,676,000	39,640,000
Idaho	22,284,000	24,760,000
Illinois	233,743,500	259,715,000
Indiana	124,551,000	138,390,000
Iowa	58,288,500	64,765,000
Kansas	39,613,500	44,015,000
Kentucky	65,781,000	73,090,000
Louisiana	56,812,500	63,125,000
Maine	33,727,500	37,475,000
Maryland	124,996,500	138,885,000
Massachusetts	132,939,000	147,710,000
Michigan	185,877,000	206,530,000
Minnesota	84,109,500	93,455,000
Mississippi	43,470,000	48,300,000
Missouri	112,306,500	124,785,000
Montana	15,624,000	17,360,000
Nebraska	24,772,500	27,525,000
Nevada	18,621,000	20,690,000
New Hampshire	39,645,000	44,050,000
New Jersey	160,717,500	178,575,000
New Mexico	17,185,500	19,095,000
New York	477,940,500	531,045,000
North Carolina	89,136,000	99,040,000
North Dakota	13,981,500	15,535,000
Ohio	290,947,500	323,275,000
Oklahoma	41,755,500	46,395,000
Oregon	58,383,000	64,870,000
Pennsylvania	196,272,000	218,080,000
Rhode Island	23,634,000	26,260,000
South Carolina	52,947,000	58,830,000
South Dakota	16,798,500	18,665,000
Tennessee	69,687,000	77,430,000
Texas	196,353,000	218,170,000
Utah	20,056,500	22,285,000
Vermont	17,302,500	19,225,000
Virginia	88,209,000	98,010,000
Washington	79,596,000	88,440,000
West Virginia	80,563,500	89,515,000
Wisconsin	87,763,500	97,515,000
Wyoming	13,513,500	15,015,000
Guam	3,348,000	3,720,000
Puerto Rico	52,803,000	58,670,000
Virgin Islands	1,701,000	1,890,000
American Samoa	2,772,000	3,080,000
Trust Territory of the Pacific Islands	6,885,000	7,650,000
Total	4,500,000,000	5,000,000,000

(c) The authorizations in paragraph (b) of this section depend on appropriation. Therefore, the Regional Administrator may not obligate any portion of any authorization for a fiscal year until a law is enacted appropriating part or all of the sums authorized for that fiscal year. If sums appropriated are less than the sums authorized for a fiscal year, EPA will apply the percentages in paragraph (a) of this section to distribute all appropriated sums among the States, and promptly will notify each State of its share. The Regional Administrator may not obligate more than the State's share of appropriated sums.

(d) If supplementary funds are appropriated in any fiscal year under section 205(e) of the Act to carry out the purposes of this paragraph, no State shall receive less than one-half of 1 percent of the total allotment among all States for that fiscal year, except that in the case of Guam, the Virgin Islands, American Samoa, and the Trust Territories not more than thirty-three one-hundredths of 1 percent of the total allotment shall be allotted to all four of those jurisdictions. If for any fiscal year the amount appropriated to carry out this paragraph is less than the full amount needed, the following States will share in any funds appropriated for the purposes of this paragraph in the following percentages, drawn from the

note to table 3 of committee print numbered 95–30 of the Committee on Public Works and Transportation of the House of Representatives:

State	Percentage
Alaska	5.4449
Delaware	7.1459
District of Columbia	12.8612
Idaho	.3416
Montana	10.8755
Nevada	6.1352
New Mexico	8.4057
North Dakota	13.4733
South Dakota	9.0178
Utah	3.8648
Vermont	8.2206
Wyoming	14.2135
Total	100.0000

§ 35.910–9 Allotment of Fiscal Year 1978 appropriation.

(a) Public Law 95–240 appropriated $4.5 billion. These allotments are available until expended but must be obligated by September 30, 1979. After that date unobligated balances will be reallotted under section 205(b) of the Act (see § 35.910–2(b)).

(b) These sums were allotted to the States as shown in § 35.910–8(b).

[43 FR 56200, Nov. 30, 1978]

§ 35.910–10 Allotment of Fiscal Year 1979 appropriation.

(a) Title II of Public Law 95–392 appropriated $4.2 billion. These allotments are available until expended but must be obligated by September 30, 1980. After that date, unobligated balances will be reallotted under section 205(b) of the Act (see § 35.910–2(b)).

(b) The allotments were computed by applying the percentages in § 35.910–8(a) and (b) to the funds appropriated for FY 1979 and rounding to the nearest hundred dollars.

(c) The $4.2 billion are allotted as follows:

State	Allotments from funds appropriated under Pub. L. 95–392
Alabama	$53,189,100
Alaska	20,709,000
Arizona	32,128,000
Arkansas	31,117,400
California	329,323,400
Colorado	38,050,800
Connecticut	45,858,100
Delaware	20,709,000
District of Columbia	20,709,000
Florida	158,904,600
Georgia	80,425,600
Hawaii	32,836,300
Idaho	20,709,000
Illinois	215,137,900
Indiana	114,637,000
Iowa	53,648,800
Kansas	36,460,300
Kentucky	60,545,000
Louisiana	52,290,300
Maine	31,042,900
Maryland	115,047,000
Massachusetts	122,357,300
Michigan	171,081,500
Minnesota	77,414,600
Mississippi	40,009,900
Missouri	103,367,100
Montana	20,709,000
Nebraska	22,800,700
Nevada	20,709,000
New Hampshire	36,489,300
New Jersey	147,924,700
New Mexico	20,709,000
New York	439,897,200
North Carolina	82,040,900
North Dakota	20,709,000
Ohio	267,788,600
Oklahoma	38,431,900
Oregon	53,735,800
Pennsylvania	180,649,100
Rhode Island	21,752,800
South Carolina	48,732,500
South Dakota	20,709,000
Tennessee	64,140,000
Texas	180,723,600
Utah	20,709,000
Vermont	20,709,000
Virginia	81,187,700
Washington	73,260,300
West Virginia	74,150,800
Wisconsin	80,777,700
Wyoming	20,709,000
American Samoa	2,551,400
Guam	3,081,500
Northern Mariana Islands	570,300
Puerto Rico	48,600,000
Trust Territory of Pacific	5,766,700
Virgin Islands	1,565,600
Total	4,200,000,000

[43 FR 56201, Nov. 30, 1978, as amended at 44 FR 37595, June 27, 1979; 44 FR 39339, July 5, 1979]

§ 35.910–11 Allotment of Fiscal Year 1980 appropriation.

(a) Title II of Public Law 96–103 appropriated $3.4 billion. These allotments are available until expended but must be obligated by September 30, 1981. After that date, unobligated balances will be reallotted under section 205(b) of the Act (see § 35.910–2(b)).

(b) The allotments were computed by applying the percentages in § 35.910–8 (a) and (d) to the funds appropriated for FY 1980 and rounding to the nearest hundred dollars.

(c) The $3.4 billion are alloted as follows:

State	Allotments from funds appropriated under Pub. L. 95–372
Alabama	$43,057,800
Alaska	16,764,500
Arizona	26,008,400
Arkansas	25,190,300
California	266,595,100
Colorado	30,803,000
Connecticut	37,123,200
Delaware	16,764,500
District of Columbia	16,764,500
Florida	128,637,000
Georgia	65,106,400
Hawaii	26,581,700
Idaho	16,764,500
Illinois	174,159,300
Indiana	92,801,300
Iowa	43,430,000
Kansas	29,515,500
Kentucky	49,012,600
Louisiana	42,330,300
Maine	25,129,900
Maryland	93,133,300
Massachusetts	99,051,100
Michigan	138,494,500
Minnesota	62,668,900
Mississippi	32,388,900
Missouri	83,678,100
Montana	16,764,500
Nebraska	18,457,700
Nevada	16,764,500
New Hampshire	29,539,000
New Jersey	119,748,500
New Mexico	16,764,500
New York	356,107,300
North Carolina	66,414,100
North Dakota	16,764,500
Ohio	216,781,200
Oklahoma	31,111,500
Oregon	43,500,400
Pennsylvania	146,239,700
Rhode Island	17,609,400
South Carolina	39,450,100
South Dakota	16,764,500
Tennessee	51,922,900
Texas	146,300,100
Utah	16,764,500
Vermont	16,764,500
Virginia	65,723,400
Washington	59,305,900
West Virginia	60,026,800
Wisconsin	65,391,400
Wyoming	16,764,500
American Samoa	2,065,400
Guam	2,494,500
Puerto Rico	39,342,800
Trust Terr	4,667,200
Virgin Islands	1,267,400
Northern Marianas	462,700
Total	3,400,000,000

[45 FR 16486, Mar. 14, 1980]

§ 35.910–12 Reallotment of deobligated funds of fiscal year 1978.

(a) Of the 4.5 billion appropriated by Public Law 95–240 for fiscal year 1978, $23,902,130 remained unobligated as of September 30, 1979 and thereby became subject to reallotment.

(b) The reallotment was computed by applying the percentages in § 35.910–8(a), adjusted to account for the absence of Ohio and readjusted to comply with the requirements of § 35.910(d) establishing a minimum allotment of .5 percent.

(c) These funds are added to the fiscal year 1980 allotments and will remain available through September 30, 1981 (see §§ 35.910–2(b) and 35.910–8).

(d) The $23,902,130 is allotted as follows:

State	Amount
Alabama	$324,543
Alaska	118,190
Arizona	196,050
Arkansas	189,880
California	2,009,389
Colorado	232,191
Connecticut	279,813
Delaware	118,190
District of Columbia	118,190
Florida	969,582
Georgia	490,736
Hawaii	200,367
Idaho	125,148
Illinois	1,312,681
Indiana	699,465
Iowa	327,345
Kansas	222,494
Kentucky	369,430
Louisiana	319,073
Maine	189,428
Maryland	701,974
Massachusetts	746,591
Michigan	1,043,875
Minnesota	472,360
Mississippi	244,147
Missouri	630,710
Montana	118,190
Nebraska	139,138
Nevada	118,190
New Hampshire	222,653
New Jersey	902,590
New Mexico	118,190
New York	2,684,060
North Carolina	500,590
North Dakota	118,190
Oklahoma	234,496
Oregon	327,888
Pennsylvania	1,102,234
Rhode Island	132,719
South Carolina	297,352
South Dakota	118,190
Tennessee	391,354
Texas	1,102,708
Utah	118,190
Vermont	118,190
Virginia	495,392
Washington	447,046

State	Amount
West Virginia	452,493
Wisconsin	492,883
Wyoming	118,190
Guam	18,805
Puerto Rico	296,561
Virgin Islands	9,561
American Samoa	15,573
Tr. Terr. of Pac. Islds	35,192
N. Mariana Islds	3,480
Total	23,902,130

[45 FR 83497, Dec. 19, 1980. Correctly designated at 46 FR 9947, Jan. 30, 1981]

§35.912 Delegation to State agencies.

EPA's policy is to maximize the use of staff capabilities of State agencies. Therefore, in the implementation of the construction grant program, optimum use will be made of available State and Federal resources. This will eliminate unnecessary duplicative reviews of documents required in the processing of construction grant awards. Accordingly, the Regional Administrator may enter into a written agreement, where appropriate, with a State agency to authorize the State agency's certification of the technical or administrative adequacy of specifically required documents. The agreement may provide for the review and certification of elements of: (a) Facilities plans (step 1), (b) plans and specifications (step 2), (c) operation and maintenance manuals, and (d) such other elements as the Regional Administrator determines may be appropriately delegated as the program permits and State competence allows. The agreement will define requirements which the State will be expected to fulfill as part of its general responsibilities for the conduct of an effective preaward applicant assistance program; compensation for this program is the responsibility of the State. The agreement will also define specific duties regarding the review of identified documents prerequisite to the receipt of grant awards. A certification agreement must provide that an applicant or grantee may request review by the Regional Administrator of an adverse recommendation by a State agency. Delegation activities are compensable by EPA only under section 106 of the Act or subpart F of this part.

§35.915 State priority system and project priorty list.

Construction grants will be awarded from allotments according to the State priority list, based on the approved State priority system. The State priority system and list must be designed to achieve optimum water quality management consistent with the goals and requirements of the Act.

(a) *State priority system.* The State priority system describes the methodology used to rate and rank projects that are considered eligible for assistance. It also sets forth the administrative, management, and public participation procedures required to develop and revise the State project priority list. In developing its annual priority list, the State must consider the construction grant needs and priorities set forth in certified and approved State and areawide water quality management (WQM) plans. The State shall hold a public hearing before submission of the priority system (or revision thereto). Before the hearing, a fact sheet describing the proposed system (including rating and ranking criteria) shall be distributed to the public. A summary of State responses to public comment and to any public hearing testimony shall be prepared and included in the priority system submission. The Regional Administrator shall review and approve the State priority system for procedural completeness, insuring that it is designed to obtain compliance with the enforceable requirements of the Act as defined in §35.905. The Regional Administrator may exempt grants for training facilities under section 109(b)(1) of the Act and §35.930–1(b) from these requirements.

(1) *Project rating criteria.* (i) The State priority system shall be based on the following criteria:

(A) The severity of the pollution problem;

(B) The existing population affected;

(C) The need for preservation of high quality waters; and

(D) At the State's option, the specific category of need that is addressed.

(ii) The State will have sole authority to determine the priority for each category of need. These categories

comprise mutually exclusive classes of facilities and include:

(A) Category I—Secondary treatment;

(B) Category II—More stringent treatment;

(C) Category IIIA—Infiltration/inflow correction;

(D) Category IIIB—Sewer system replacement or major rehabilitation;

(E) Category IVA—New collectors and appurtenances;

(F) Category IVB—New interceptors and appurtenances; and

(G) Category V—Correction of combined sewer overflows.

(iii) Step 2, step 3 and step 2+3 projects utilizing processes and techniques meeting the innovative and alternative guidelines in Appendix E of this part may receive higher priority. Also 100 percent grants for projects that modify or replace malfunctioning treatment works constructed with an 85 percent grant may receive a higher priority.

(iv) Other criteria, consistent with these, may be considered (including the special needs of small and rural communities). The State shall not consider: The project area's development needs not related to pollution abatement; the geographical region within the State; or future population growth projections.

(2) *Criteria assessment.* The State shall have authority to determine the relative influence of the rating criteria used for assigning project priority. The criteria must be clearly delineated in the approved State priority system and applied consistently to all projects. A project on the priority list shall generally retain its priority rating until an award is made.

(b) *State needs inventory.* The State shall maintain a listing, including costs by category, of all needed treatment works. The most recent needs inventory, prepared in accordance with section 516(b)(1)(B) of the Act, should be used for this purpose. This State listing should be the same as the needs inventory and fulfills similar requirements in the State WQM planning process. The State project priority list shall be consistent with the needs inventory.

(c) *State project priority list.* The State shall prepare and submit annually a ranked priority listing of projects for which Federal assistance is expected during the 5-year planning period starting at the beginning of the next fiscal year. The list's fundable portion shall include those projects planned for award during the first year of the 5-year period (hereinafter called the funding year). The fundable portion shall not exceed the total funds expected to be available during the year less all applicable reserves provided in § 35.915–1 (a) through (d). The list's planning portion shall include all projects outside the fundable portion that may, under anticipated allotment levels, receive funding during the 5-year period. The Administrator shall provide annual guidance to the States outlining the funding assumptions and other criteria useful in developing the 5-year priority list.

(1) *Project priority list development.* The development of the project priority list shall be consistent with the rating criteria established in the approved priority system, in accordance with the criteria in paragraph (a)(1) of this section. In ranking projects, States must also consider the treatment works and step sequence; the allotment deadline; total funds available; and other management criteria in the approved State priority system. In developing its annual priority list, the State must consider the construction grant needs and priorities set forth in certified and approved State and areawide WQM plans. The Regional Administrator may request that a State provide justification for the rating or ranking established for specific project(s).

(2) *Project priority list information.* The project priority list shall include the information for each project that is set out below for projects on the fundable portion of the list. The Administrator shall issue specific guidance on these information requirements for the planning portion of the list, including phase-in procedures for the fiscal year 1979 priority planning process.

(i) State assigned EPA project number;

(ii) Legal name and address of applicant;

(iii) Short project name or description;

(iv) Priority rating and rank of each project, based on the approved priority system;

(v) Project step number (step 1, 2, 3, or 2+3);

(vi) Relevant needs authority/facility number(s);

(vii) NPDES number (as appropriate);

(viii) Parent project number (i.e., EPA project number for predecessor project);

(ix) For step 2, 3, or 2+3 projects, indication of alternative system for small community;

(x) For step 2, 3, or 2+3 projects, that portion (if any) of eligible cost to apply to alternative techniques;

(xi) For step 2, 3, or 2+3 projects, that portion (if any) of eligible cost to apply to innovative processes;

(xii) For step 3 or 2+3 projects, the eligible costs in categories IIIB, IV, and V (see § 35.915(a)(1)(ii));

(xiii) Total eligible cost;

(xiv) Date project is expected to be certified by State to EPA for funding;

(xv) Estimated EPA assistance (not including potential grant increase from the reserve in § 35.915–1(b)); and

(xvi) Indication that the project does or does not satisfy the enforceable requirements provision, including (as appropriate) funding estimates for those portions which do not meet the enforceable requirements of the Act.

(d) *Public participation.* Before the State submits its annual project priority list to the Regional Administrator, the State shall insure that adequate public participation (including a public hearing) has taken place as required by Subpart G of this part. Before the public hearing, the State shall circulate information about the priority list including a description of each proposed project and a statement concerning whether or not it is necessary to meet the enforceable requirements of the Act. The information on the proposed priority list under paragraph (c)(2) of this section may be used to fulfill these requirements. This public hearing may be conducted jointly with any regular public meeting of the State agency. The public must receive adequate and timely statewide notice of the meeting (including publication of the proposed priority list) and attendees at the meeting must receive adequate opportunity to express their views concerning the list. Any revision of the State priority list (including project bypass and the deletion or addition of projects) requires circulation for public comment and a public hearing unless the State agency and the Regional Administrator determine that the revision is not significant. The approved State priority system shall describe the public participation policy and procedures applicable to any proposed revision to the priority list.

(e) *Submission and review of project priority list.* The State shall submit the priority list as part of the annual State program plan under Subpart G of this part. A summary of State agency response to public comment and hearing testimony shall be prepared and submitted with the priority list. The Regional Administrator will not consider a priority list to be final until the public participation requirements are met and all information required for each project has been received. The Regional Administrator will review the final priority list within 30 days to insure compliance with the approved State priority system. No project may be funded until this review is complete.

(f) *Revision of the project priority list.* The State may modify the project priority list at any time during the program planning cycle in accordance with the public participation requirements and the procedures established in the approved State priority system. Any modification (other than clerical) to the priority list must be clearly documented and promptly reported to the Regional Administrator. As a minimum, each State's priority list management procedure must provide for the following conditions:

(1) *Project bypass.* A State may bypass a project on the fundable portion of the list after it gives written notice to the municipality and the NPDES authority that the State has determined that the project to be bypassed will not be ready to proceed during the funding year. Bypassed projects shall retain their relative priority rating for consideration in the future year allotments. The

highest ranked projects on the planning portion of the list will replace bypassed projects. Projects considered for funding in accordance with this provision must comply with paragraph (g) of this section.

(2) *Additional allotments.* If a State receives any additional allotment(s), it may fund projects on the planning portion of the priority list without further public participation if:

(i) The projects on the planning portion have met all administrative and public participation requirements outlined in the approved State priority system; and

(ii) The projects included within the fundable range are the highest priority projects on the planning portion.

If sufficient projects that meet these conditions are not available on the planning portion of the list, the State shall follow the procedures outlined in paragraph (e) of this section to add projects to the fundable portion of the priority list.

(3) *Project removal.* A State may remove a project from the priority list only if:

(i) The project has been fully funded;

(ii) The project is no longer entitled to funding under the approved priority system;

(iii) The Regional Administrator has determined that the project is not needed to comply with the enforceable requirements of the Act; or

(iv) The project is otherwise ineligible.

(g) *Regional Administrator review for compliance with the enforceable requirements of the Act.* (1) Unless otherwise provided in paragraph (g)(2) of this section, the Regional Administrator may propose the removal of a specific project or portion thereof from the State project priority list during or after the initial review where there is reason to believe that it will not result in compliance with the enforceable requirements of the Act. Before making a final determination, the Regional Administrator will initiate a public hearing on this issue. Questioned projects shall not be funded during this administrative process. Consideration of grant award will continue for those projects not at issue in accordance with all other requirements of this section.

(i) The Regional Administrator shall establish the procedures for the public notice and conduct of any such hearing, or, as appropriate, the procedures may be adapted from existing agency procedures such as § 6.400 or §§ 123.32 and 123.34 of this chapter. The procedures used must conform to minimum Agency guidelines for public hearings under part 25 of this chapter.

(ii) Within 30 days after the date of the hearing, the Regional Administrator shall transmit to the appropriate State agency a written determination about the questioned projects. If the Regional Administrator determines that the project will not result in compliance with the enforceable requirements of the Act, the State shall remove the project from the priority list and modify the priority list to reflect this action. The Regional Administrator's determination will constitute the final agency action, unless the State or municipality files a notice of appeal under part 30, subpart J of this subchapter.

(2) The State may use 25 percent of its funds during each fiscal year for projects or portions of projects in categories IIIB, IVA, IVB, and V (see § 35.915(a)(1)(ii)). These projects must be eligible for Federal funding to be included on the priority list. EPA will generally not review these projects under paragraph (g)(1) of this section to determine if they will result in compliance with the enforceable requirements of the Act. The Regional Administrator will, however, review all projects or portions thereof which would use funds beyond the 25-percent level according to the criteria in paragraph (g)(1) of this section.

(h) *Regional Administrator review for eligibility.* If the Regional Administrator determines that a project on the priority list is not eligible for assistance under this subpart, the State and municipality will be promptly advised and the State will be required to modify its priority list accordingly. Elimination of any project from the priority list shall be final and conclusive unless the State or municipality files a notice

of appeal under part 30, subpart J of this subchapter.

[43 FR 44049, Sept. 27, 1978, as amended at 44 FR 37595, June 27, 1979; 44 FR 39339, July 5, 1979]

§ 35.915–1 Reserves related to the project priority list.

In developing the fundable portion of the priority list, the State shall provide for the establishment of the several reserves required or allowed under this section. The State shall submit a statement specifying the amount to be set aside for each reserve with the final project priority list.

(a) *Reserve for State management assistance grants.* The State may (but need not) propose that the Regional Administrator set aside from each allotment a reserve not to exceed 2 percent or $400,000, whichever is greater, for State management assistance grants under subpart F of this part. Grants may be made from these funds to cover the reasonable costs of administering activities delegated to a State. Funds reserved for this purpose that are not obligated by the end of the allotment period will be added to the amounts last allotted to a State. These funds shall be immediately available for obligation to projects in the same manner and to the same extent as the last allotment.

(b) *Reserve for innovative and alternative technology project grant increase.* Each State shall set aside from its annual allotment a specific percentage to increase the Federal share of grant awards from 75 percent to 85 percent of the eligible cost of construction (under § 35.908(b)(1)) for construction projects which use innovative or alternative waste water treatment processes and techniques. The set-aside amount shall be 2 percent of the State's allotment for each of fiscal years 1979 and 1980, and 3 percent for fiscal year 1981. Of this amount not less than one-half of 1 percent of the State's allotment shall be set aside to increase the Federal grant share for projects utilizing innovative processes and techniques. Funds reserved under this section may be expended on projects for which facilities plans were initiated before fiscal year 1979. These funds shall be reallotted if not used for this purpose during the allotment period.

(c) *Reserve for grant increases.* The State shall set aside not less than 5 percent of the total funds available during the priority list year for grant increases (including any funds necessary for development of municipal pretreatment programs) for projects awarded assistance under § 35.935–11. The funds reserved for this purpose shall be reallotted if not obligated. Therefore, if they are not needed for grant increases they should be released for funding additional projects before the reallotment deadline.

(d) *Reserve for step 1 and step 2 projects.* The State may (but need not) set aside up to 10 percent of the total funds available in order to provide grant assistance to step 1 and step 2 projects that may be selected for funding after the final submission of the project priority list. The funds reserved for this purpose shall be reallotted if not obligated. Therefore, they should be released for funding additional projects before the reallotment deadline.

(e) *Reserve for alternative systems for small communities.* Each State with a rural population of 25 percent or more (as determined by population estimates of the Bureau of Census) shall set aside an amount equal to 4 percent of the State's annual allotment, beginning with the fiscal year 1979 allotment. The set-aside amount shall be used for funding alternatives to conventional treatment works for small communities. The Regional Administrator may authorize, at the request of the Governor of any non-rural State, a reserve of up to 4 percent of that State's allotment for alternatives to conventional treatment works for small communities. For the purposes of this paragraph, the definition of a small community is any municipality with a population of 3,500 or less, or highly dispersed sections of larger municipalities, as determined by the Regional Administrator. In States where the reserve is mandatory, these funds shall be reallotted if not obligated during the allotment period. In States where the reserve is optional, these funds should be released for funding projects before the reallotment deadline.

§ 35.917 Facilities planning (step 1).

(a) Sections 35.917 through 35.917–9 establish the requirements for facilities plans.

(b) Facilities planning consists of those necessary plans and studies which directly relate to the construction of treatment works necessary to comply with sections 301 and 302 of the Act. Facilities planning will demonstrate the need for the proposed facilities. Through a systematic evaluation of feasible alternatives, it will also demonstrate that the selected alternative is cost-effective, i.e., is the most economical means of meeting established effluent and water quality goals while recognizing environmental and social considerations. (See appendix A to this subpart.)

(c) EPA requires full compliance with the facilities planning provisions of this subpart before award of step 2 or step 3 grant assistance. (Facilities planning initiated before May 1, 1974, may be accepted under regulations published on February 11, 1974, if the step 2 or step 3 grant assistance is awarded before April 1, 1980.)

(d) Grant assistance for step 2 or step 3 may be awarded before approval of a facilities plan for the entire geographic area to be served by the complete waste treatment system of which the proposed treatment works will be an integral part if:

(1) The Regional Administrator determines that applicable statutory requirements have been met (see §§ 35.925–7 and 35.925–8); that the facilities planning related to the proposed step 2 or step 3 project has been substantially completed; and that the step 2 or step 3 project for which grant assistance is made will not be significantly affected by the completion of the facilities plan and will be a component part of the complete system; and

(2) The applicant agrees to complete the facilities plan on a schedule the State accepts (subject to the Regional Administrator's approval); the schedule shall be inserted as a special condition in the grant agreement.

(e) Facilities planning may not be initiated before award of a step 1 grant or written approval of a plan of study (see § 35.920–3(a)(1)) accompanied by reservation of funds for a step 1 grant (see §§ 35.925–18 and 35.905). Facility planning must be based on load allocations, delineation of facility planning areas and population projection totals and disaggregations in approved water quality management (WQM) plans. (See paragraph 8a(3) of appendix A.) After October 1, 1979, the Regional Administrator shall not approve grant assistance for any project under this subpart if such facility-related information is not available in an approved WQM plan, unless the Regional Administrator determines, in writing, based on information submitted by the State or the grantee, that the facility-related information was not within the scope of the WQM work program, or that award of the grant is necessary to achieve water quality goals of the Act.

(f) If the information required as part of a facilities plan has been developed separately, the facilities plan should incorporate it by reference. Planning which has been previously or collaterally accomplished under local, State, or Federal programs will be utilized (not duplicated).

§ 35.917–1 Content of facilities plan.

Facilities planning must address each of the following to the extent considered appropriate by the Regional Administrator:

(a) A description of the treatment works for which construction drawings and specifications are to be prepared. This description shall include preliminary engineering data, cost estimates for design and construction of the treatment works, and a schedule for completion of design and construction. The preliminary engineering data may include, to the extent appropriate, information such as a schematic flow diagram, unit processes, design data regarding detention times, flow rates, sizing of units, etc.

(b) A description of the selected complete waste treatment system(s) of which the proposed treatment works is a part. The description shall cover all elements of the system, from the service area and collection sewers, through treatment, to the ultimate discharge of treated waste waters and management and disposal of sludge. Planning area maps must include major components of existing and proposed treatment

works. For individual systems, planning area maps must include those individual systems which are proposed for funding under § 35.918.

(c) Infiltration/inflow documentation in accordance with § 35.927 et seq.

(d) A cost-effectiveness analysis of alternatives for the treatment works and for the complete waste treatment system(s) of which the treatment works is a part. The selection of the system(s) and the choice of the treatment works for which construction drawings and specifications are to be prepared shall be based on the results of the cost-effectiveness analysis. (See Appendix A to this subpart.) This analysis shall include:

(1) The relationship of the size and capacity of alternative works to the needs to be served, including reserve capacity;

(2) An evaluation of alternative flow and waste reduction measures, including nonstructural methods;

(3) An evaluation of improved effluent quality attainable by upgrading the operation and maintenance and efficiency of existing facilities as an alternative or supplement to construction of new facilities;

(4) An evaluation of the capability of each alternative to meet applicable effluent limitations. (All step 2, step 3, or step 2+3 projects shall be based on application of best practicable waste treatment technology (BPWTT), as a minimum. Where application of BPWTT would not meet water quality standards, the facilities plan shall provide for attaining such standards. Such provision shall consider the alternative of treating combined sewer overflows.);

(5) An identification of, and provision for, applying BPWTT as defined by the Administrator, based on an evaluation of technologies included under each of the following waste treatment management techniques:

(i) Biological or physical-chemical treatment and discharge to receiving waters;

(ii) Systems employing the reuse of waste water and recycling of pollutants;

(iii) Land application techniques;

(iv) Systems including revenue generating applications; and

(v) Onsite and nonconventional systems;

(6) An evaluation of the alternative methods for the ultimate disposal of treated waste water and sludge materials resulting from the treatment process, and a justification for the method(s) chosen;

(7) An adequate assessment of the expected environmental impact of alternatives (including sites) under part 6 of this chapter. This assessment shall be revised as necessary to include information developed during subsequent project steps;

(8) For facilities planning begun after September 30, 1978, whether or not prepared under a step 1 grant, an analysis of innovative and alternative treatment processes and techniques that reclaim and reuse water, productively recycle waste water constituents, eliminate the discharge of pollutants, recover energy or otherwise achieve the benefits described in appendix E. The provisions of this paragraph are encouraged in all cases. They are required in facilities planning for new treatment works and for treatment works which are being acquired, altered, modified, improved, or extended either to handle a significant increase in the volume of treated waste or to reduce significantly the pollutant discharges from the system. Where certain categories of alternative technologies may not be generally applicable because of prevailing climatic or geological conditions, a detailed analysis of these categories of alternative technologies is not required. However, the reason for such a rejection must be fully substantiated in the facilities plan;

(9) For facilities planning begun after September 30, 1978, whether or not prepared under a step 1 grant, an analysis of the primary energy requirements (operational energy inputs) for each system considered. The alternative selected shall propose adoption of measures to reduce energy consumption or to increase recovery as long as such measures are cost-effective. Where processes or techniques are claimed to be innovative technology on the basis of energy reduction criterion contained in paragraph 6e(2) of appendix E to this subpart, a detailed energy analysis

shall be included to substantiate the claim to the satisfaction of the Regional Administrator.

(e) An identification of effluent discharge limitations or, where a permit has been issued, the NPDES permit number, and a brief description of how the proposed project(s) will result in compliance with the enforceable requirements of the Act.

(f) Required comments or approvals of relevant State, interstate, regional, and local agencies (see § 30.305–8).

(g) A final responsiveness summary, consistent with 40 CFR 25.8 and § 35.917–5.

(h) A brief statement demonstrating that the authorities who will be implementing the plan have the necessary legal, financial, institutional, and managerial resources available to insure the construction, operation, and maintenance of the proposed treatment works.

(i) A statement specifying that the requirements of the Civil Rights Act of 1964 and of part 7 of this chapter have been met.

(j) For facilities planning begun after September 30, 1978, whether or not prepared under a step 1 grant, a description of potential opportunities for recreation, open space, and access to bodies of water analyzed in planning the proposed treatment works and the recommended actions. The facilities plan shall also describe measures taken to coordinate with Federal, State, and local recreational programs and with recreational elements of applicable approved areawide WQM plans.

(k) A municipal pretreatment program in accordance with § 35.907,

(l) An estimate of total project costs and charges to customers, in accordance with guidance issued by the Administrator.

(m) A statement concerning the availability and estimated cost of proposed sites.

[43 FR 44049, Sept. 27, 1978, as amended at 44 FR 10302, Feb. 16, 1979]

§ 35.917–2 State responsibilities.

(a) *Facilities planning areas.* Facilities planning should focus upon the geographic area to be served by the waste treatment system(s) of which the proposed treatment works will be an integral part. The facilities plan should include the area necessary to prepare an environmental assessment and to assure that the most cost-effective means of achieving the established water quality goals can be implemented. To assure that facilities planning will include the appropriate geographic areas, the State shall:

(1) Delineate, as a preliminary basis for planning, the boundaries of the planning areas. In the determination of each area, appropriate attention should be given to including the entire area where cost savings, other management advantages, or environmental gains may result from interconnection of individual waste treatment systems or collective management of such systems;

(2) Include maps, which shall be updated annually, showing the identified areas and boundary determinations, as part of the State submission under section 106 of the act;

(3) Consult with local officials in making the area and boundary determinations; and

(4) Where individual systems are likely to be cost-effective, delineate a planning area large enough to take advantage of economies of scale and efficiencies in planning and management.

(b) *Facilities planning priorities.* The State shall establish funding priorities for facilities planning in accordance with §§ 35.915 and 35.915–1.

§ 35.917–3 Federal assistance.

(a) *Eligibility*. Only an applicant which is eligible to receive grant assistance for subsequent phases of construction (steps 2 and 3) and which has the legal authority to subsequently construct and manage the facility may apply for grant assistance for step 1. If the area to be covered by the facilities plan includes more than one political jurisdiction, a grant may be awarded for a step 1 project, as appropriate, to:

(1) The joint authority representing such jurisdictions, if eligible; (2) one qualified (lead agency) applicant; or (3) two or more eligible jurisdictions. After a waste treatment management agency for an area has been designated in accordance with section 208(c) of the Act (see subpart G of this part) the Regional Administrator shall not make

any grant for construction of treatment works within the area except to the designated agency.

(b) *Reports.* Where a grant has been awarded for facilities planning which is expected to require more than 1 year to complete, the grantee must submit a brief progress report to the Regional Administrator at 3-month intervals. The progress report shall contain a minimum of narrative description, and shall describe progress in completing the approved schedule of specific tasks for the project.

§ 35.917–4 Planning scope and detail.

(a) Initially, the geographic scope of step 1 grant assistance shall be based on the area delineated by the State under § 35.917–2, subject to the Regional Administrator's review. The Regional Administrator may make the preliminary delineation of the boundaries of the planning area, if the State has not done so, or may revise boundaries selected by the locality or State agency, after appropriate consultation with State and local officials.

(b) Facilities planning shall be conducted only to the extent that the Regional Administrator finds necessary in order to insure that facilities for which grants are awarded will be cost-effective and environmentally sound and to permit reasonable evaluation of grant applications and subsequent preparation of designs, construction drawings, and specifications.

§ 35.917–5 Public participation.

(a) *General.* Consistent with section 101(e) of the Clean Water Act and 40 CFR part 25, EPA, the States, and grantees shall provide for, encourage, and assist public participation in the facilities planning process and shall provide citizens with information about and opportunities to become involved in the following:

(1) The assessment of local water quality problems and needs;

(2) The identification and evaluation of locations for waste water treatment facilities and of alternative treatment technologies and systems including those which recycle and reuse waste water (including sludge), use land treatment, reduce waste water volume, and encourage multiple use of facilities;

(3) The evaluation of social, economic, fiscal, and environmental impacts; and

(4) The resolution of other significant facilities planning issues and decisions.

(b) *Basic Public Participation Program.* Since waste water treatment facilities vary in complexity and impact upon the community, these public participation requirements institute a two-tier public participation program for facilities planning consisting of a Basic Public Participation Program, suitable for less complex projects with only moderate community impacts, and a Full-Scale Public Participation Program, for more complex projects with potentially significant community impacts. All facilities planning projects, except those that qualify for the Full-Scale Public Participation Program under paragraph (c) of this section and those exempt under paragraph (d) of this section, require the Basic Public Participation Program. In conducting the Basic Public Participation Program, the grantee shall at a minimum:

(1) Institute, and maintain throughout the facilities planning process, a public information program (including the development and use of a mailing list of interested and affected members of the public), in accordance with 40 CFR 25.4 and § 35.917–5(a).

(2) Notify and consult with the public, during the preparation of the plan of study, about the nature and scope of the proposed facilities planning project. EPA encourages the grantee to consult with the public in the selection of the professional consulting engineer.

(3) Include in the plan of study, submitted with the Step 1 grant application, a brief outline of the public participation program, noting the projected staff and budget resources which will be devoted to public participation, a proposed schedule for public participation activities, the types of consultation and informational mechanisms that will be used, and the segments of the public that the grantee has targeted for involvement.

(4) Submit to EPA, within 45 days after the date of acceptance of the Step 1 grant award, a brief Public Participation Work Plan. In addition to meeting

the requirements of 40 CFR 25.11, the Work Plan shall describe the method of coordination between the appropriate Water Quality Management public participation program under subpart G of this part and the grantee's public participation program as required by 40 CFR 35.917–5(e). The grantee shall distribute the Work Plan, accompanied by a fact sheet on the project, to groups and individuals who may be interested in or affected by the project. The fact sheet shall describe the nature, scope and location of the project; identify the consulting engineer and grantee staff contact; and include a preliminary estimate of the total costs of the project, including debt service and operation and maintenance, and of the resulting charges to each affected household.

(5) Consult with the public, in accordance with 40 CFR 25.4, early in the facilities planning process when assessing the existing and future situations and identifying and screening alternatives, but before selecting alternatives for evaluation according to the Cost-Effectiveness Analysis Guidelines (see Appendix A, Cost-Effectiveness Analysis Guidelines, paragraph 5). After consultating with the public, the grantee shall prepare and distribute a responsiveness summary, in accordance with 40 CFR 25.8.

(6) Hold a meeting to consult with the public, in accordance with 40 CFR 25.6, when alternatives are largely developed but before an alternative or plan has been selected and then prepare and distribute a responsiveness summary, in accordance with 40 CFR 25.8.

(7) Hold a public hearing before final adoption of the facilities plan, in accordance with 40 CFR 25.5.

(8) Include in the final facilities plan a final responsiveness summary, in accordance with 40 CFR 25.8.

(c) *Full-Scale Public Participation Program.* (1) The Regional Administrator shall require a Full-Scale Public Participation Program for all Step 1 facilities planning projects that fulfill one or more of the following three conditions:

(i) Where EPA prepares or requires the preparation of an Environmental Impact Statement during facilities planning under 40 CFR part 6; or

(ii) Where advanced wastewater treatment (AWT) levels, as defined in EPA guidance, may be required; or

(iii) Where the Regional Administrator determines that more active public participation in decision-making is needed because of the possibility of particularly significant effects on matters of citizen concern, as indicated by one or more of the following:

(A) Significant change in land use or impact on environmentally sensitive areas;

(B) Significant increase in the capacity of treatment facilities or interceptors, significant increase in sewered area, or construction of wholly new treatment and conveyance systems;

(C) Substantial total cost to the community or substantial increased cost to users (i.e., cost not reimbursed under the grant);

(D) Significant public controversy;

(E) Significant impact on local population growth or economic growth;

(F) Substantial opportunity for implementation of innovative or alternative wastewater treatment technologies or systems.

(2) The grantee shall initiate a Full-Scale Public Participation Program as soon as the determination in paragraph (c)(1) of this section is made. Generally, the determination should be made before or at the time of award of the Step 1 grant. However, if the Regional Administrator's determination under paragraph (c)(1) of this section to require a Full-Scale Public Participation Program occurs after initiation of facilities planning because of newly discovered circumstances, the grantee shall initiate and expanded public participation program at that point. The Regional Administrator shall assure that the expanded program is at least as inclusive as a normal Full-Scale Public Participation Program, except for constraints imposed by facilities planning activities that have already been completed. If the project is segmented, the Regional Administrator shall look at the project as a whole when considering whether to require a Full-Scale Public Participation Program.

(3) In conducting the Full-Scale Public Participation Program, the grantee shall at a minimum:

(i) Institute and maintain, throughout the facilities planning process, a public information program, in accordance with 40 CFR 25.4 and § 35.917–5(a);

(ii) Notify and consult with the public, during the development of the plan of study, about the nature and scope of the proposed facilities planning project. EPA encourages the grantee to consult with the public in the selection of the professional consulting engineer;

(iii) Include, in the plan of study submitted with the Step 1 grant application, brief outline of the public participation program, noting the projected staff and budget resources which will be devoted to public participation, a proposed schedule for public participation activities, types of information and consultation mechanisms that will be used, and the segments of the public that the grantee has targeted for involvement;

(iv) Designate or hire a public participation coordinator and establish an advisory group, in accordance with 40 CFR 25.7, immediately upon acceptance of the Step 1 grant award.

(v) Submit to EPA, within 45 days after the date of acceptance of the step 1 grant award and after consultation with the advisory group, a brief Public Participation Work Plan. In addition to meeting the requirements of 40 CFR 25.11, the Work Plan shall describe the method for coordination between the appropriate Water Quality Management agency public participation program under subpart G of this part, and the grantee's public participation program as required by 40 CFR 35.917–5(e). The grantee shall distribute the Work Plan, accompanied by a fact sheet on the project, to groups and individuals who may be interested in or affected by the project. The fact sheet shall describe the nature, scope and location of the project; identify the consulting engineer and grantee staff contact; and include a preliminary estimate of the total costs of the project, including debt service and operation and maintenance, and of the resulting costs to each affected household;

(vi) Hold a public meeting to consult with the public, in accordance with 40 CFR 25.6, early in the facilities planning process when assessing the existing and future situations, and identifying and screening alternatives, but before selection of alternatives for evaluation according to the Cost-Effectiveness Analysis Guidelines (see Appendix A, Cost-Effectiveness Analysis Guidelines, paragraph 5). Following the public meeting, the grantee shall prepare and distribute a responsiveness summary, in accordance with 40 CFR 25.8;

(vii) Hold a public meeting to consult with the public, in accordance with 40 CFR 25.6, when alternatives are largely developed but before an alternative or plan has been selected, and then prepare and circulate a responsiveness summary, in accordance with 40 CFR 25.8;

(viii) Hold a public hearing prior to final adoption of the facilities plan, in accordance with 40 CFR 25.5. This public hearing may be held in conjunction with the public hearing on the draft Environmental Impact Statement under 40 CFR part 6.

(ix) Include, in the final facilities plan, a final responsiveness summary, in accordance with 40 CFR 25.8.

(d) *Exemptions from public participation requirements.* (1) Upon written request of the grantee, the Regional Administrator may exempt projects in which only minor upgrading of treatment works or minor sewer rehabilitation is anticipated according to the State Project Priority List from the requirements of the Basic and Full-Scale Public Participation Programs under paragraphs (b) and (c) of this section, except for the public hearing and public disclosure of costs. Before granting any exemption, the Regional Administrator shall issue a public notice of intent to waive the above requirements containing the facts of the situation and shall allow 30 days for response. If responses indicate that serious local issues exist, then the Regional Administrator shall deny the exemption request.

(2) During the facilities planning process, if the Regional Administrator determines that the project no longer meets the exemption criteria stated above, the grantee, in consultation with the Regional Administrator, shall undertake public participation activities commensurate with the appropriate public participation program but

adjusted for constraints imposed by facilities planning activities that have already been completed.

(3) If a project is segmented, the Regional Administrator shall look at the project as a whole when considering any petition for exemption.

(e) *Relationship between facilities planning and other environmental protection programs.* Where possible, the grantee shall further the integration of facilities planning and related environmental protection programs by coordinating the facilities planning public participation program with public participation activities carried out under other programs. At a minimum, the grantee shall provide for a formal liaison between the facilities planning advisory group (or the grantee, where there is no advisory group) and any areawide advisory group established under subpart G of this part. The Regional Administrator may request review of the facilities plan by any appropriate State or areawide advisory group in association with the facilities plan review required by 40 CFR 35.1522.

(f) *Mid-project evaluation.* In accordance with 40 CFR 25.12(a)(2), EPA shall, in conjunction with other regular oversight responsibilities, conduct a mid-project review of compliance with public participation requirements.

[44 FR 10302, Feb. 16, 1979]

§ 35.917–6 Acceptance by implementing governmental units.

A facilities plan submitted for approval shall include adopted resolutions or, where applicable, executed agreements of the implementing governmental units, including Federal facilities, or management agencies which provide for acceptance of the plan, or assurances that it will be carried out, and statements of legal authority necessary for plan implementation. The Regional Administrator may approve any departures from these requirements before the plan is submitted.

§ 35.917–7 State review and certification of facilities plan.

Each facilities plan must be submitted to the State agency for review. The State must certify that:

(a) The plan conforms with requirements set forth in this subpart;

(b) The plan conforms with any existing final basin plans approved under section 303(e) of the Act;

(c) Any concerned 208 planning agency has been given the opportunity to comment on the plan; and

(d) The plan conforms with any waste treatment management plan approved under section 208(b) of the Act.

§ 35.917–8 Submission and approval of facilities plan.

The State agency must submit the completed facilities plan for the Regional Administrator's approval. Where deficiencies in a facilities plan are discovered, the Regional Administrator shall promptly notify the State and the grantee or applicant in writing of the nature of such deficiencies and of the recommended course of action to correct such deficiencies. Approval of a plan of study or a facilities plan will not constitute an obligation of the United States for any step 2, step 3, or step 2+3 project.

§ 35.917–9 Revision or amendment of facilities plan.

A facilities plan may provide the basis for several subsequent step 2, step 3, or step 2+3 projects. A facilities plan which has served as the basis for the award of a grant for a step 2, step 3, or step 2+3 project shall be reviewed before the award of any grant for a subsequent project involving step 2 or step 3 to determine if substantial changes have occurred. If the Regional Administrator decides substantial changes have occurred which warrant revision or amendment, the plan shall be revised or amended and submitted for review in the same manner specified in this subpart.

§ 35.918 Individual systems.

(a) For references to individual systems, the following definitions apply:

(1) *Individual systems.* Privately owned alternative wastewater treatment works (including dual waterless/gray water systems) serving one or more principal residences or small commercial establishments which are neither connected into nor a part of any conventional treatment works. Normally, these are on-site systems with localized treatment and disposal

of wastewater with minimal or no conveyance of untreated waste water. Limited conveyance of treated or partially treated effluents to further treatment or disposal sites can be a function of individual systems where cost-effective.

(2) *Principal residence.* Normally the voting residence, the habitation of the family or household which occupies the space for at least 51 percent of the time annually. Second homes, vacation, or recreation residences are not included in this definition. A commercial establishment with waste water flow equal to or smaller than one user equivalent (generally 300 gallons per day dry weather flows) is included.

(3) *Small commercial establishments.* Private establishments normally found in small communities such as restaurants, hotels, stores, filling stations, or recreational facilities with dry weather wastewater flows less than 25,000 gallons per day. Private, nonprofit entities such as churches, schools, hospitals, or charitable organizations are considered small commercial establishments. A commercial establishment with waste water flow equal to or smaller than one user equivalent (generally 300 gallons per day dry weather flow) shall be treated as a residence.

(4) *Conventional system.* A collection and treatment system consisting of minimum size (6 or 8 inch) gravity collector sewers normally with manholes, force mains, pumping and lift stations, and interceptors leading to a central treatment plant.

(5) *Alternative waste water treatment works.* A waste water conveyance and/or treatment system other than a conventional system. This includes small diameter pressure and vacuum sewers and small diameter gravity sewers carrying partially or fully treated waste water.

(b) A public body otherwise eligible for a grant under § 35.920–1 is eligible for a grant to construct privately owned treatment works serving one or more principal residences or small commercial establishments if the requirements of §§ 35.918–1, 35.918–2, and 35.918–3 are met.

(c) All individual systems qualify as alternative systems under § 35.908 and are eligible for the 4-percent set-aside (§ 35.915–1(e)) where cost-effective.

§ 35.918–1 Additional limitations on awards for individual systems.

In addition to those limitations set forth in § 35.925, the grant applicant shall:

(a) Certify that the principal residence or small commercial establishment was constructed before December 27, 1977, and inhabited or in use on or before that date;

(b) Demonstrate in the facility plan that the solution chosen is cost-effective and selected in accordance with the cost-effectiveness guidelines for the construction grants program (see appendix A to this subpart);

(c) Apply on behalf of a number of individual units located in the facility planning area;

(d) Certify that public ownership of such works is not feasible and list the reasons in support of such certification;

(e) Certify that such treatment works will be properly installed, operated, and maintained and that the public body will be responsible for such actions;

(f) Certify before the step 2 grant award that the project will be constructed and an operation and maintenance program established to meet local, State, and Federal requirements including those protecting present or potential underground potable water sources;

(g) Establish a system of user charges and industrial cost recovery in accordance with §§ 35.928 *et seq.*, 35.929 *et seq.*, 35.935–13, and 35.935–15;

(h) Obtain assurance (such as an easement or covenant running with the land), before the step 2 grant award, of unlimited access to each individual system at all reasonable times for such purposes as inspection, monitoring, construction, maintenance, operation, rehabilitation, and replacement. An option will satisfy this requirement if it can be exercised no later than the initiation of construction;

(i) Establish a comprehensive program for regulation and inspection of individual systems before EPA approval of the plans and specifications.

Planning for this comprehensive program shall be completed as part of the facility plan. The program shall include as a minimum, periodic testing of water from existing potable water wells in the area. Where a substantial number of onsite systems exist, appropriate additional monitoring of the aquifer(s) shall be provided;

(j) Comply with all other applicable limitations and conditions which treatment works projects funded under this subpart must meet.

§ 35.918–2 Eligible and ineligible costs.

(a) Only the treatment and treatment residue disposal portions of toilets with composting tanks, oil-flush mechanisms or similar in-house systems are grant eligible.

(b) Acquisition of land in which the individual system treatment works are located is not grant eligible.

(c) Commodes, sinks, tubs, drains, and other wastewater generating fixtures and associated plumbing are not grant eligible. Modifications to homes or commercial establishments are also excluded from grant eligibility.

(d) Only reasonable costs of construction site restoration to preconstruction conditions are eligible. Costs of improvement or decoration associated with the installation of individual systems are not eligible.

(e) Conveyance pipes from wastewater generating fixtures to the treatment unit connection flange or joint are not eligible where the conveyance pipes are located on private property.

§ 35.918–3 Requirements for discharge of effluents.

Best practicable waste treatment criteria published by EPA under section 304(d)(2) of the Act shall be met for disposal of effluent on or into the soil from individual systems. Discharges to surface waters shall meet effluent discharge limitations for publicly owned treatment works.

§ 35.920 Grant application.

Grant applications will be submitted and evaluated in accordance with part 30, subpart B of this chapter.

§ 35.920–1 Eligibility.

Municipalities (see § 35.905), intermunicipal agencies, States, or interstate agencies are eligible for grant assistance.

§ 35.920–2 Procedure.

(a) Preapplication assistance, including, where appropriate, a preapplication conference, should be requested from the State agency or the appropriate EPA Regional Office for each project for which State priority has been determined. The State agency must receive an application for each proposed treatment works. The basic application shall meet the project requirements in § 35.920–3. Submissions required for subsequent related projects shall be in the form of amendments to the basic application. The grantee shall submit each application through the State agency. It must be complete (see § 35.920–3), and must relate to a project for which priority has been determined under § 35.915. If any information required by § 35.920–3 has been furnished with an earlier application, the applicant need only incorporate it by reference and, if necessary, revise such information using the previously approved application.

(b) Grant applications (and, for subsequent related projects, amendments to them) are considered received by EPA only when complete and upon official receipt of the State priority certification document (EPA form 5700–28) in the appropriate EPA Regional Office. In a State which has been delegated Federal application processing functions under § 35.912 or under Subpart F of this part, applications are considered received by EPA on the date of State certification. Preliminary or partial submittals may be made; EPA may conduct preliminary processing of these submittals.

§ 35.920–3 Contents of application.

(a) *Step 1: Facilities plan and related step 1 elements.* An application for a grant for step 1 shall include:

(1) A plan of study presenting—

(i) The proposed planning area;

(ii) An identification of the entity or entities that will be conducting the planning;

(iii) The nature and scope of the proposed step 1 project and public participation program, including a schedule for the completion of specific tasks;

(iv) An itemized description of the estimated costs for the project; and

(v) Any significant public comments received.

(2) Proposed subagreements, or an explanation of the intended method of awarding subagreements for performance of any substantial portion of the project work;

(3) Required comments or approvals of relevant State, local and Federal agencies, including clearinghouse requirements of Office of Management and Budget Circular A–95, as revised (see § 30.305 of this subchapter).

(b) *Step 2: Preparation of construction drawings and specifications.* Before the award of a grant or grant amendment for a step 2 project, the applicant must furnish the following:

(1) A facilities plan (including the environmental assessment portion in accordance with part 6 of this chapter) in accordance with §§ 35.917 through 35.917–9;

(2) Adequate information regarding availability of proposed site(s), if relevant;

(3) Proposed subagreements or an explanation of the intended method of awarding subagreements for performance of any substantial portion of the project work;

(4) Required comments or approvals of relevant State, local, and Federal agencies, including clearinghouse requirements of Office and Management and Budget Circular A–95, as revised (see § 30.305 of this subchapter);

(5) A value engineering (VE) commitment in compliance with § 35.926(a) for all step 2 grant applications for projects with a projected total step 3 grant eligible construction cost of $10 million or more excluding the cost for interceptor and collector sewers. For those projects requiring VE, the grantee may propose, subject to the Regional Administrator's approval, to exclude interceptor and collector sewers from the scope of the VE analysis;

(6) Proposed or executed (as determined appropriate by the Regional Administrator) intermunicipal agreements necessary for the construction and operation of the proposed treatment works, for any treatment works serving two or more municipalities;

(7) A schedule for initiation and completion of the project work (see § 35.935–9), including milestones; and

(8) Satisfactory evidence of compliance with:

(i) Sections 35.925–11, 35.929 *et seq.* and 35.935–13 regarding user charges;

(ii) Sections 35.925–11, 35.928 *et seq.* and 35.935–15, regarding industrial cost recovery, if applicable;

(iii) Section 35.925–16, regarding costs allocable to Federal facilities, if applicable;

(iv) Section 35.927–4 regarding a sewer use ordinance;

(v) Section 30.405–2 and part 4 of this chapter, regarding compliance with the Uniform Relocation Assistance and Real Property Acquisition Policies Act of 1970, if applicable; and,

(vi) Other applicable Federal statutory and regulatory requirements (see subpart C of part 30 of this chapter).

(9) After June 30, 1980, for grantees subject to pretreatment requirements under § 35.907(b), the items required by § 35.907(d)(1), (2), and (4).

(10) A public participation work plan, in accordance with § 35.917–5(g), if the grantee, after consultation with the public and its advisory group (if one exists), determines that additional public participation activities are necessary.

(c) *Step 3. Building and erection of a treatment works.* Prior to the award of a grant or grant amendment for a step 3 project, the applicant must furnish the following:

(1) Each of the items specified in paragraph (b) of this section (in compliance with paragraph (b)(6) of this section, the final intermunicipal agreements must be furnished);

(2) Construction drawings and specifications suitable for bidding purposes (in the case of an application for step 3 assistance solely for acquisition of eligible land, the grantee must submit a plat which shows the legal description of the property to be acquired, a preliminary layout of the distribution and drainage systems, and an explanation of the intended method of acquiring the property);

(3) A schedule for or evidence of compliance with §§ 35.925–10 and 35.935–12

concerning an operation and maintenance program, including a preliminary plan of operation; and

(4) After December 31, 1980, the items required by § 35.907(d)(1) through (d)(9), as applicable, for grantees subject to pretreatment requirements under § 35.907(b).

(5) A public participation work plan, in accordance with § 35.917–5(g), if the grantee determines, after consultation with the public, that additional public participation activities are necessary.

(d) *Step 2+3.* Combination design and construction of a treatment works. Before the award of a grant or grant amendment for a step 2+3 project, the grantee must furnish:

(1) Each of the items specified in paragraph (b) of this section, and (2) a schedule for timely submission of plans and specifications, operation and maintenance manual, user charge and industrial cost recovery systems, sewer use ordinance, and a preliminary plan of operation.

(e) *Training facility project.* An application for grant assistance for construction and support of a training facility, facilities or training programs under section 109(b) of the Act shall include:

(1) A statement concerning the suitability of the treatment works facility, facilities or training programs for training operations and maintenance personnel for treatment works throughout one or more States;

(2) A written commitment from the State agency or agencies to carry out at such facility a program of training approved by the Regional Administrator;

(3) An engineering report (required only if a facility is to be constructed) including facility design data and cost estimates for design and construction;

(4) A detailed outline of the training programs, including (for 1-, 3-, and 5-year projections):

(i) An assessment of need for training,

(ii) How the need was determined,

(iii) Who would be trained,

(iv) What curriculum and materials would be used,

(v) What type of delivery system will be used to conduct training, (i.e., State vocational education system, State environmental agency, universities or private organizations),

(vi) What resources are available for the program,

(vii) A budget breakdown on the cost of the program, and

(viii) The relationship of the facility or programs to other training programs.

[43 FR 44049, Sept. 27, 1978, as amended at 44 FR 10304, Feb. 16, 1979; 44 FR 37595, June 27, 1979; 44 FR 39339, July 5, 1979]

§ 35.925 Limitations on award.

Before awarding initial grant assistance for any project for a treatment works through a grant or grant amendment, the Regional Administrator shall determine that all of the applicable requirements of § 35.920–3 have been met. He shall also determine the following:

§ 35.925–1 Facilities planning.

That, if the award is for step 2, step 3, or step 2+3 grant assistance, the facilities planning requirements in § 35.917 *et seq.* have been met.

§ 35.925–2 Water quality management plans and agencies.

That the project is consistent with any applicable water quality management (WQM) plan approved under section 208 or section 303(e) of the Act; and that the applicant is the wastewater management agency designated in any WQM plan certified by the Governor and approved by the Regional Administrator.

§ 35.925–3 Priority determination.

That such works are entitled to priority in accordance with § 35.915, and that the award of grant assistance for the proposed project will not jeopardize the funding of any treatment works of higher priority.

§ 35.925–4 State allocation.

That the award of grant assistance for a particular project will not cause the total of all grant assistance which applicants within a State received, including grant increases, to exceed the total of all allotments and reallotments available to the State under § 35.910.

§ 35.925–5 Funding and other capabilities.

That the applicant has:

(a) Agreed to pay the non-Federal project costs, and

(b) The legal, institutional, managerial, and financial capability to insure adequate construction, operation, and maintenance of the treatment works throughout the applicant's jurisdiction. (Also see § 30.340–3 of this subchapter.)

§ 35.925–6 Permits.

That the applicant has, or has applied for, the permit or permits as required by the national pollutant discharge elimination system (NPDES) with respect to existing discharges affected by the proposed project.

§ 35.925–7 Design.

That the treatment works design will be (in the case of projects involving step 2) or has been (in the case of projects for step 3) based upon:

(a) Appendix A to this subpart, so that the design, size, and capacity of such works are cost-effective and relate directly to the needs they serve, including adequate reserve capacity;

(b) Subject to the limitations set forth in § 35.930–4, achievement of applicable effluent limitations established under the Act, or BPWTT (see § 35.917–1(d)(5)), including consideration, as appropriate, for the application of technology which will provide for the reclaiming or recycling of water or otherwise eliminate the discharge of pollutants;

(c) The sewer system evaluation and rehabilitation requirements of § 35.927; and

(d) The value engineering requirements of § 35.926 (b) and (c).

§ 35.925–8 Environmental review.

(a) That, if the award is for step 2, step 3, or step 2+3, the requirements of the National Environmental Policy Act of 1969 (42 U.S.C. 4321 *et seq.*) applicable to the project step have been met. The grantee or grant applicant must prepare an adequate assessment of expected environmental impacts, consistent with the requirements of part 6 of this chapter, as part of facilities planning, in accordance with § 35.917–1(d)(7). The Regional Administrator must insure that an environmental impact statement or a negative declaration is prepared in accordance with part 6 of this chapter (particularly §§ 6.108, 6.200, 6.212, and 6.504) in conjunction with EPA review of a facility plan and issued before any award of step 2 or step 3 grant assistance.

(b) The Regional Administrator may not award step 2 or step 3 grant assistance if the grantee has not made, or agreed to make, pertinent changes in the project, in accordance with determinations made in a negative declaration or environmental impact statement. He may condition a grant to ensure that the grantee will comply, or seek to obtain compliance, with such environmental review determinations. The conditions may address secondary impacts to the extent deemed appropriate by the Regional Administrator.

§ 35.925–9 Civil rights.

That if the award of grant assistance is for a project involving step 2 or step 3, the applicable requirements of the Civil Rights Act of 1964 and part 7 of this chapter have been met.

§ 35.925–10 Operation and maintenance program.

If the award of grant assistance is for a step 3 project, that the applicant has made satisfactory provision to assure proper and efficient operation and maintenance of the treatment works (including the sewer system), in accordance with § 35.935–12, and that the State will have an effective operation and maintenance monitoring program to assure that treatment works assisted under this subpart comply with applicable permit and grant conditions.

§ 35.925–11 User charges and industrial cost recovery.

That, in the case of grant assistance for a project involving step 2 or step 3, the grantee has complied or will comply with the requirements for user charge and industrial cost recovery systems. (See §§ 35.928 *et seq.*, 35.929 *et seq.*, 35.935–13, and 35.935–15.)

(a) *Grants awarded before July 1, 1979.* Grantees must submit a schedule of implementation to show that their

user charge and industrial cost recovery systems will be approved in accordance with the requirements of §§ 35.935–13 and 35.935–15.

(b) *Grants awarded after June 30, 1979.* The grantee's user charge and industrial cost recovery systems must be approved before the award of step 3 grant assistance.

(c) *Letters of intent.* In the case of any grant assistance for a project involving step 2 or step 3, the applicant must have received signed letters of intent from each significant industrial user stating that it will pay that portion of the grant amount allocable to the treatment of its wastes. Each such letter shall also include a statement of the industrial user's intended period of use of the treatment works. A significant industrial user is one that will contribute greater than 10 percent of the design flow or design pollutant loading of the treatment works. In addition, the applicant must agree to require all industrial users to pay that portion of the grant amount allocable to the treatment of wastes from such users.

§ 35.925–12 Property.

That the applicant has demonstrated to the satisfaction of the Regional Administrator that it has met or will met the property requirements of § 35.935–3.

§ 35.925–13 Sewage collection system.

That, if the project involves sewage collection system work, such work (a) is for the replacement or major rehabilitation of an existing sewer system under § 35.927–3(a) and is necessary to the total integrity and performance of the waste treatment works serving the community, or (b) is for a new sewer system in a community in existence on October 18, 1972, which has sufficient existing or planned capacity to adequately treat such collected sewage. Replacement or major rehabilitation of an existing sewer system may be approved only if cost-effective; the result must be a sewer system design capacity equivalent to that of the existing system plus a reasonable amount for future growth. For purposes of this section, a community would include any area with substantial human habitation on October 18, 1972, as determined by an evaluation of each tract (city blocks or parcels of 5 acres or less where city blocks do not exist). No award may be made for a new sewer system in a community in existence on October 18, 1972, unless the Regional Administrator further determines that:

(a) The bulk (generally two-thirds) of the expected flow (flow from existing plus projected future habitations) from the collection system will be for waste waters originating from the community (habitations) in existence on October 18, 1972;

(b) The collection system is cost-effective;

(c) The population density of the area to be served has been considered in determining the cost-effectiveness of the proposed project:

(d) The collection system conforms with any approved WQM plan, other environmental laws in accordance with § 35.925–14, Executive Orders on Wetlands and Floodplains and Agency policy on wetlands and agricultural lands; and

(e) The system would not provide capacity for new habitations or other establishments to be located on environmentally sensitive land such as wetlands, floodplains or prime agricultural lands. Appropriate and effective grant conditions, (e.g., restricting sewer hook-up) should be used where necessary to protect these resources from new development.

§ 35.925–14 Compliance with environmental laws.

That the treatment works will comply with all pertinent requirements of applicable Federal, State and local environmental laws and regulations. (See § 30.101 and subpart C of part 30 of this chapter and the Clean Air Act.)

§ 35.925–15 Treatment of industrial wastes.

That the allowable project costs do not include (a) costs of interceptor or collector lines constructed exclusively, or almost exclusively, to serve industrial sources or (b) costs allocable to the treatment for control or removal of pollutants in wastewater introduced into the treatment works by industrial

sources, unless the applicant is required to remove such pollutants introduced from nonindustrial sources. The project must be included in a complete waste treatment system, a principal purpose of which project (as defined by the Regional Administrator; see §§ 35.903 (d) and 35.905) and system is the treatment of domestic wastes of the entire community, area, region or the district concerned. See the pretreatment regulations in part 403 of this chapter and § 35.907.

[44 FR 39340, July 5, 1979]

§ 35.925–16 Federal activities.

That the allowable step 2 or step 3 project costs do not include the proportional costs allocable to the treatment of wastes from major activities of the Federal Government. A ''major activity'' includes any Federal facility which contributes either (a) 250,000 gallons or more per day or (b) 5 percent or more of the total design flow of waste treatment works, whichever is less.

§ 35.925–17 Retained amounts for reconstruction and expansion.

That the allowable project costs have been reduced by an amount equal to the unexpended balance of the amounts the applicant retains for future reconstruction and expansion under § 35.928–2(a)(2)(ii), together with interest earned.

§ 35.925–18 Limitation upon project costs incurred prior to award.

That project construction has not been initiated before the approved date of initiation of construction (as defined in § 35.905), unless otherwise provided in this section.

(a) *Step 1 or Step 2:* No grant assistance is authorized for step 1 or step 2 project work performed before award of a step 1 or step 2 grant. However, payment is authorized, in conjunction with the first award of grant assistance, for all preaward allowable project costs in the following cases:

(1) Step 1 work begun after the date of approval by the Regional Administrator of a plan of study, if the State requests and the Regional Administrator has reserved funds for the step 1 grant. However, the step 1 grant must be applied for and awarded within the allotment period of the reserved funds.

(2) Step 1 or step 2 work begun after October 31, 1974, but before June 30, 1975, in accordance with an approved plan of study or an approved facilities plan, as appropriate, but only if a grant is awarded before April 1, 1981.

(3) Step 1 or step 2 work begun before November 1, 1974, but only if a grant is awarded before April 1, 1980.

(b) *Step 3:* Except as otherwise provided in this paragraph, no grant assistance for a step 3 project may be awarded unless the award precedes initiation of the step 3 construction. Preliminary step 3 work, such as advance acquisition of major equipment items requiring long lead times, acquisition of eligible land or of an option for the purchase of eligible land, or advance construction of minor portions of treatment works, including associated engineering costs, in emergencies or instances where delay could result in significant cost increases, may be approved by the Regional Administrator after completion of environmental review, but only if (1) the applicant submits a written and adequately substantiated request for approval and (2) written approval by the Regional Administrator is obtained before initiation of the advance acquisition or advance construction. (In the case of authorization for acquisition of eligible land, the applicant must submit a plat which shows the legal description of the property to be acquired, a preliminary layout of the distribution and drainage systems, and an explanation of the intended method of acquiring the property.)

(c) The approval of a plan of study, a facilities plan, or advance acquisition of equipment or advance construction will not constitute a commitment for approval of grant assistance for a subsequent treatment works project, but will allow payment for the previously approved costs as allowable project costs upon subsequent award of grant assistance, if requested before grant award (see § 35.945(a)). In instances where such approval is obtained, the applicant proceeds at its own risk, since payment for such costs cannot be

made unless grant assistance for the project is awarded.

[43 FR 44049, Sept. 27, 1978, as amended at 44 FR 39340, July 5, 1979]

§ 35.925–19 [Reserved]

§ 35.925–20 Procurement.

That the applicant has complied or will comply with the applicable provisions of §§ 35.935 through 35.939 with respect to procurement actions taken before the award of step 1, 2, or 3 grant assistance, such as submission of the information required under § 35.937–6.

§ 35.925–21 Storm sewers.

That, under section 211(c) of the Act, the allowable project costs do not include costs of treatment works for control of pollutant discharges from a separate storm sewer system (as defined in § 35.905).

§ 35.926 Value engineering (VE).

(a) *Value engineering proposal.* All step 2 grant applications for projects having a projected total step 3 grant eligible cost of $10 million or more, excluding the cost for interceptor and collector sewers, will contain a VE commitment. The VE proposal submitted during step 2 must contain enough information to determine the adequacy of the VE effort and the justification of the proposed VE fee. Essential information shall include:

(1) Scope of VE analysis;

(2) VE team and VE coordinator (names and background);

(3) Level of VE effort;

(4) VE cost estimate;

(5) VE schedule in relation to project schedule (including completion of VE analysis and submittal of VE summary reports).

(b) *Value engineering analysis.* For projects subject to the VE requirements of paragraph (a) of this section, a VE analysis of the project design shall be performed. When the VE analysis is completed, a preliminary report summarizing the VE findings and a final report describing implementation of the VE recommendations must be submitted to the project officer on a schedule approved by him.

(c) *Implementation.* For those projects for which a VE analysis has been performed in accordance with paragraph (b) of this section, VE recommendations shall be implemented to the maximum extent feasible, as determined by the grantee, subject to the approval of the EPA project officer. Rejection of any recommendation shall be on the basis of cost-effectiveness, reliability, extent of project delays, and other factors that may be critical to the treatment processes and the environmental impact of the project.

§ 35.927 Sewer system evaluation and rehabilitation.

(a) All applicants for step 2 or step 3 grant assistance must demonstrate to the Regional Administrator's satisfaction that each sewer system discharging into the treatment works project for which grant application is made is not or will not be subject to excessive infiltration/inflow. A determination of whether excessive infiltration/inflow exists may take into account, in addition to flow and related data, other significant factors such as cost-effectiveness (including the cost of substantial treatment works construction delay, see appendix A to this subpart), public health emergencies, the effects of plant bypassing or overloading, or relevant economic or environmental factors.

(b) A sewer system evaluation will generally be used to determine whether or not excessive infiltration/inflow exists. It will consist of:

(1) Certification by the State agency, as appropriate; and, when necessary,

(2) An infiltration/inflow analysis; and, if appropriate,

(3) A sewer system evaluation survey and, if appropriate, a program, including an estimate of costs, for rehabilitation of the sewer system to eliminate excessive infiltration/inflow identified in the sewer system evaluation. Information submitted to the Regional Administrator for such determination should be the minimum necessary to enable him to make a judgment.

(c) Guidelines on sewer system evaluation published by the Administrator provide further advisory information (see § 35.900(c)). Also see §§ 35.925–7(c) and 35.935–16.

§ 35.927–1 Infiltration/inflow analysis.

(a) The infiltration/inflow analysis shall demonstrate the nonexistence or possible existence of excessive infiltration/inflow in the sewer system. The analysis should identify the presence, flow rate, and type of infiltration/inflow conditions which exist in the sewer system.

(b) For determination of the possible existence of excessive infiltration/inflow, the analysis shall include an estimate of the cost of eliminating the infiltration/inflow conditions. These costs shall be compared with estimated total costs for transportation and treatment of the infiltration/inflow. Cost-effectiveness analysis guidelines (Appendix A to this subpart) should be consulted with respect to this determination.

(c) If the infiltration/inflow analysis demonstrates the existence or possible existence of excessive infiltration/inflow a detailed plan for a sewer system evaluation survey shall be included in the analysis. The plan shall outline the tasks to be performed in the survey and their estimated costs.

§ 35.927–2 Sewer system evaluation survey.

(a) The sewer system evaluation survey shall identify the location, estimated flow rate, method of rehabilitation and cost of rehabilitation versus cost of transportation and treatment for each defined source of infiltration/inflow.

(b) A report shall summarize the results of the sewer system evaluation survey. In addition, the report shall include:

(1) A justification for each sewer section cleaned and internally inspected.

(2) A proposed rehabilitation program for the sewer system to eliminate all defined excessive infiltration/inflow.

§ 35.927–3 Rehabilitation.

(a) Subject to State concurrence, the Regional Administrator may authorize the grantee to perform minor rehabilitation concurrently with the sewer system evaluation survey in any step under a grant if sufficient funding can be made available and there is no adverse environmental impact. However, minor rehabilitation work in excess of $10,000 which is not accomplished with force account labor (see § 35.936–14(a)(2)), must be procured through formal advertising in compliance with the applicable requirements of §§ 35.938 *et seq.* and 35.939, the statutory requirements referenced in §§ 30.415 through 30.415–4 of this subchapter, and other applicable provisions of part 30.

(b) Grant assistance for a step 3 project segment consisting of major rehabilitation work may be awarded concurrently with step 2 work for the design of the new treatment works.

(c) The scope of each treatment works project defined within the facilities plan as being required for implementation of the plan, and for which Federal assistance will be requested, shall define (1) any necessary new treatment works construction and (2) any rehabilitation work (including replacement) determined by the sewer system evaluation to be necessary for the elimination of excessive infiltration/inflow. However, rehabilitation which should be a part of the applicant's normal operation and maintenance responsibilities shall not be included within the scope of a step 3 treatment works project.

(d) Only rehabilitation of the grantee's sewage collection system is eligible for grant assistance. However, the grantee's costs of rehabilitation beyond ''Y'' fittings (see definition of ''sewage collection system'' in § 35.905) may be treated on an incremental cost basis.

§ 35.927–4 Sewer use ordinance.

Each applicant for grant assistance for a step 2 or step 3 project shall demonstrate to the satisfaction of the Regional Administrator that a sewer use ordinance or other legally binding requirement will be enacted and enforced in each jurisdiction served by the treatment works project before the completion of construction. The ordinance shall prohibit any new connections from inflow sources into the sanitary sewer portions of the sewer system and shall insure that new sewers and connections to the sewer system are properly designed and constructed.

§ 35.927–5 Project procedures.

(a) *State certification.* The State agency may (but need not) certify that excessive infiltration/inflow does or does not exist. The Regional Administrator will determine that excessive infiltration/inflow does not exist on the basis of State certification, if he finds that the State had adequately established the basis for its certification through submission of only the minimum information necessary to enable a judgment to be made. Such information could include a preliminary review by the applicant or State, for example, of such parameters as per capita design flow, ratio of flow to design flow, flow records or flow estimates, bypasses or overflows, or summary analysis of hydrological, geographical, and geological conditions, but this review would not usually be equivalent to a complete infiltration/inflow analysis. State certification must be on a project-by-project basis. If, on the basis of State certification, the Regional Administrator determines that the treatment works is or may be subject to excessive infiltration/inflow, no step 2 or step 3 grant assistance may be awarded except as paragraph (c) of this section provides.

(b) *Pre-award sewer system evaluation.* Generally, except as otherwise provided in paragraph (c) of this section, an adequate sewer system evaluation, consisting of a sewer system analysis and, if required, an evaluation survey, is an essential element of step 1 facilities planning. It is a prerequisite to the award of step 2 or 3 grant assistance. If the Regional Administrator determines through State Certification or an infiltration/inflow analysis that excessive infiltration/inflow does not exist, step 2 or 3 grant assistance may be awarded. If on the basis of State certification or the infiltration/inflow analysis, the Regional Administrator determines that possible excessive infiltration/inflow exists, an adequate sewer system evaluation survey and, if required, a rehabilitation program must be furnished, except as set forth in paragraph (c) of this section before grant assistance for step 2 or 3 can be awarded. A step 1 grant may be awarded for the completion of this segment of step 1 work, and, upon completion of step 1, grant assistance for a step 2 or 3 project (for which priority has been determined under § 35.915) may be awarded.

(c) *Exception.* If the Regional Administrator determines that the treatment works would be regarded (in the absence of an acceptable program of correction) as being subject to excessive infiltration/inflow, grant assistance may be awarded if the applicant establishes to the Regional Administrator's satisfaction that the treatment works project for which grant application is made will not be significantly changed by any subsequent rehabilitation program or will be a component part of any rehabilitated system. The applicant must agree to complete the sewer system evaluation and any resulting rehabilitation on an implementation schedule the State accepts (subject to approval by the Regional Administrator), which shall be inserted as a special condition in the grant agreement.

(d) *Regional Administrator review.* Municipalities may submit through the State agency the infiltration/inflow analysis and, when appropriate, the sewer system evaluation survey to the Regional Administrator for his review at any time before application for a treatment works grant. Based on such a review, the Regional Administrator shall provide the municipality with a written response indicating either his concurrence or nonconcurrence. In order for the survey to be an allowable cost, the Regional Administrator must concur with the sewer system evaluation survey plan before the work is performed.

§ 35.928 Requirements for an industrial cost recovery system.

(a) The Regional Administrator shall approve the grantee's industrial cost recovery system and the grantee shall implement and maintain it in accordance with § 35.935–15 and the requirements in §§ 35.928–1 through 35.928–4. The grantee shall be subject to the noncompliance provisions of § 35.965 for failure to comply.

(b) Grantees awarded step 3 grants under regulations promulgated on February 11, 1974, or grantees who obtained approval of their industrial cost recovery systems before April 25, 1978, may

amend their systems to correspond to the definition of industrial users in § 35.905 or to provide for systemwide industrial cost recovery under § 35.928–1(g).

§ 35.928–1 Approval of the industrial cost recovery system.

The Regional Administrator may approve an industrial cost recovery system if it meets the following requirements:

(a) *General.* Each industrial user of the treatment works shall pay an annual amount equal to its share of the total amount of the step 1, 2, and 3 grants and any grant amendments awarded under this subpart, divided by the number of years in the recovery period. An industrial user's share shall be based on factors which significantly influence the cost of the treatment works. Volume of flow shall be a factor in determining an industrial user's share in all industrial cost recovery systems; other factors shall include strength, volume, and delivery flow rate characteristics, if necessary, to insure that all industrial users of the treatment works pay a proportionate distribution of the grant assistance allocable to industrial use.

(b) *Industrial cost recovery period.* The industrial cost recovery period shall be equal to 30 years or to the useful life of the treatment works, whichever is less.

(c) *Frequency of payment.* Except as provided in § 35.928–3, each industrial user shall pay not less often than annually. The first payment by an industrial user shall be made not later than 1 year after the user begins use of the treatment works.

(d) *Reserve capacity.* If an industrial user enters into an agreement with the grantee to reserve a certain capacity in the treatment works, the user's industrial cost recovery payments shall be based on the total reserved capacity in relation to the design capacity of the treatment works. If the discharge of an industrial user exceeds the reserved capacity in volume, strength or delivery flow rate characteristics, the user's industrial cost recovery payment shall be increased to reflect the actual use. If there is no reserve capacity agreement between the industrial user and the grantee, and a substantial change in the strength, volume, or delivery flow rate characteristics of an industrial user's discharge share occurs, the user's share shall be adjusted proportionately.

(e) *Upgrading and expansion.* (1) If the treatment works are upgraded, each existing industrial user's share shall be adjusted proportionately.

(2) If the treatment works are expanded, each industrial user's share shall be adjusted proportionately, except that a user with reserved capacity under paragraph (d) of this section shall incur no additional industrial cost recovery charges unless the user's actual use exceeded its reserved capacity.

(f) [Reserved]

(g) *Collection of industrial cost recovery payments.* Industrial cost recovery payments may be collected on a systemwide or on a project-by-project basis. The total amount collected from all industrial users on a systemwide basis shall equal the sum of the amounts which would be collected on a project-by-project basis.

(h) *Adoption of system.* One or more municipal legislative enactments or other appropriate authority must incorporate the industrial cost recovery system. If the project is a regional treatment works accepting waste-waters from other municipalities, the subscribers receiving waste treatment services from the grantee shall adopt industrial cost recovery systems in accordance with section 204(b)(1)(B) of the Act with §§ 35.928 through 35.928–4. These industrial cost recovery systems shall also be incorporated in appropriate municipal legislative enactments or other appropriate authority of all municipalities contributing wastes to the treatment works. The public shall be consulted prior to adoption of the industrial cost recovery system, in accordance with 40 CFR part 25.

(i) *Inconsistent agreements.* The grantee may have pre-existing agreements which address (1) the reservation of capacity in the grantee's treatment works or (2) the charges to be collected by the grantee in providing waste water treatment services or reserving capacity. The industrial cost recovery system shall take precedence over any terms or conditions of agreements or

contracts between the grantee and industrial users which are inconsistent with the requirements of section 204(b)(1)(B) of the Act and these industrial cost recovery regulations.

[43 FR 44049, Sept. 27, 1978, as amended at 44 FR 10304, Feb. 16, 1979; 44 FR 39340, July 5, 1979]

§ 35.928–2 Use of industrial cost recovery payments.

(a) The grantee shall use industrial cost recovery payments received from industrial users as follows:

(1) The grantee shall return 50 percent of the amounts received from industrial users, together with any interest earned, to the U.S. Treasury annually.

(2) The grantee shall retain 50 percent of the amount recovered from industrial users.

(i) A portion of the amounts which the grantee retains may be used to pay the incremental costs of administration of the industrial cost recovery system. The incremental costs of administration are those costs remaining after deducting all costs reasonably attributable to the administration of the user charge system. The incremental costs shall be segregated from all other administrative costs of the grantee.

(ii) A minimum of 80 percent of the amounts the grantee retains after paying the incremental costs of administration, together with any interest earned, shall be used for the allowable costs (see § 35.940) of any expansion, upgrading or reconstruction of treatment works necessary to meet the requirements of the Act. The grantee shall obtain the written approval of the Regional Administrator before the commitment of the amounts retained for expansion, upgrading, or reconstruction.

(iii) The remainder of the amounts retained by the grantee may be used as the grantee sees fit, except that they may not be used for construction of industrial pretreatment facilities or rebates to industrial users for costs incurred in complying with user charge or industrial cost recovery requirements.

(b) Pending the use of industrial cost recovery payments, as described in paragraph (a) of this section, the grantee shall:

(1) Invest the amounts received in obligations of the U.S. Government or in obligations guaranteed as to principal and interest by the U.S. Government or any agency thereof; or

(2) Deposit the amounts received in accounts fully collateralized by obligations of the U.S. Government or any agency thereof.

§ 35.928–3 Implementation of the industrial cost recovery system.

(a) When a grantee's industrial cost recovery system is approved, implementation of the approved system shall become a condition of the grant.

(b) The grantee shall maintain all records that are necessary to document compliance with these regulations.

§ 35.928–4 Moratorium on industrial cost recovery payments.

(a) EPA does not require that industrial users defined in paragraphs (a) and (b) of the definition in § 35.905 pay industrial cost recovery for charges incurred during the period after December 31, 1977, and before July 1, 1979. Any industrial cost recovery charges incurred for accounting periods or portions of periods ending before January 1, 1978, shall be paid by industrial users. These funds are to be used as described in § 35.928–2.

(b) Grantees may either defer industrial cost recovery payments, or require industrial users as defined in paragraphs (a) and (b) of the definition in § 35.905 to pay industrial cost recovery payments for the period after December 31, 1977, and before July 1, 1979. If grantees require payment, the amount held by the municipality for eventual return to the U.S. Treasury under § 35.928–2(a)(1) shall be invested as required under § 35.928–2(b) until EPA advises how such sums shall be distributed. Grantees shall implement or continue operating approved industrial cost recovery systems and maintain their activities of monitoring flows, calculating payments due, and submitting bills to industrial users informing them of their current or deferred obligation.

(c) Industrial users as defined in paragraphs (a) and (b) of the definition

in § 35.905 who are served by grantees who defer payment during the 18-month period ending June 30, 1979, shall make industrial cost recovery payments for that period in a lump sum by June 30, 1980, or in equal annual installments prorated from July 1, 1979, over the remaining industrial cost recovery period.

§ 35.929 Requirements for user charge system.

The Regional Administrator shall approve the grantee's user charge system and the grantee shall implement and maintain it in accordance with § 35.935–13 and the requirements in §§ 35.929–1 through 35.929–3. The grantee shall be subject to the noncompliance provisions of § 35.965 for failure to comply.

§ 35.929–1 Approval of the user charge system.

The Regional Administrator may approve a user charge system based on either actual use under paragraph (a) of this section or ad valorem taxes under paragraph (b) of this section. The general requirements in §§ 35.929–2 and 35.929–3 must also be satisfied.

(a) *User charge system based on actual use.* A grantee's user charge system based on actual use (or estimated use) of waste water treatment services may be approved if each user (or user class) pays its proportionate share of operation and maintenance (including replacement) costs of treatment works within the grantee's service area, based on the user's proportionate contribution to the total waste water loading from all users (or user classes). To insure a proportional distribution of operation and maintenance costs to each user (or user class), the user's contribution shall be based on factors such as strength, volume, and delivery flow rate characteristics.

(b) *User charges based on ad valorem taxes.* A grantee's user charge system (or the user charge system of a subscriber, i.e., a constituent community receiving waste treatment services from the grantee) which is based on ad valorem taxes may be approved if it meets the requirements of paragraphs (b)(1) through (b)(7) of this section. If the Regional Administrator determines that the grantee did not have a dedicated ad valorem tax system on December 27, 1977, meeting the requirements of paragraphs (b)(1) through (b)(3) of this section, the grantee shall develop a user charge system based on actual use under § 35.929–1(a).

(1) The grantee (or subscriber) had in existence on December 27, 1977, a system of ad valorem taxes which collected revenues to pay the cost of operation and maintenance of waste water treatment works within the grantee's service area and has continued to use that system.

(2) The grantee (or subscriber) has not previously obtained approval of a user charge system on actual use.

(3) The system of ad valorem taxes in existence on December 27, 1977, was dedicated ad valorem tax system.

(i) A grantee's system will be considered to be dedicated if the Regional Administrator determines that the system meets all of the following criteria:

(A) The ad valorem tax system provided for a separate tax rate or for the allocation of a portion of the taxes collected for payment of the grantee's costs of waste water treatment services;

(B) The grantee's budgeting and accounting procedures assured that a specified portion of the tax funds would be used for the payment of the costs of operation and maintenance;

(C) The ad valorem tax system collected tax funds for the costs of waste water treatment services which could not be or historically were not used for other purposes; and

(D) The authority responsible for the operation and maintenance of the treatment works established the budget for the costs of operation and maintenance and used those specified amounts solely to pay the costs of operation and maintenance.

(ii) A subscriber's system based on ad valorem taxes will be considered to be dedicated if a contractual agreement or a charter established under State law existed on December 27, 1977, which required the subscriber to pay its share of the cost of waste water treatment services.

(4) A user charge system funded by dedicated ad valorem taxes shall establish, as a minimum, the classes of users listed below:

(i) Residential users, including single-family and multifamily dwellings, and small nonresidential users, including nonresidential commercial and industrial users which introduce no more than the equivalent of 25,000 gallons per day of domestic sanitary wastes to the treatment works:

(ii) Industrial and commercial users;

(A) Any nongovernmental user of publicly owned treatment works which discharges more than 25,000 gallons per day (gpd) of sanitary waste; or a volume of process waste, or combined process and sanitary waste, equivalent to 25,000 gpd of sanitary waste. The grantee, with the Regional Administrator's approval, shall define the strength of the residential discharges in terms of parameters including, as a minimum, biochemical oxygen demand (BOD) and suspended solids (SS) per volume of flow. Dischargers with a volume exceeding 25,000 gpd or the weight of BOD or SS equivalent to that weight found in 25,000 gpd of sanitary waste are considered industrial users.

(B) Any nongovernmental user of a publicly owned treatment works which discharges wastewater to the treatment works which contains toxic pollutants or poisonous solids, liquids, or gases in sufficient quantity either singly or by interaction with other wastes, to contaminate the sludge of any municipal systems, or to injure or to interfere with any sewage treatment process, or which constitutes a hazard to humans or animals, creates a public nuisance, or creates any hazard in or has an adverse effect on the waters receiving any discharge from the treatment works.

(iii) Users which pay no ad valorem taxes or receive substantial credits in paying such taxes, such as tax exempt institutions or governmental users, but excluding publicly owned facilities performing local governmental functions (e.g., city office building, police station, school) which discharge solely domestic wastes.

(5) The grantee must be prepared to demonstrate for the Regional Administrator's approval that its system of evaluating the volume, strength, and characteristics of the discharges from users or categories of users classified within the subclass of small nonresidential users is sufficient to assure that such users or the average users in such categories do not discharge either toxic pollutants or more than the equivalent of 25,000 gallons per day of domestic wastewater.

(6) The ad valorem user charge system shall distribute the operation and maintenance costs for all treatment works in the grantee's jurisdiction to the residential and small nonresidential user class, in proportion to the use of the treatment works by this class. The proportional allocation of costs for this user class shall take into account the total waste water loading of the treatment works, the constituent elements of the wastes from this user class and other appropriate factors. The grantee may assess one ad valorem tax rate to this entire class of users or, if permitted under State law, the grantee may assess different ad valorem tax rates for the subclass of residential users and the subclass of small nonresidential users provided the operation and maintenance costs are distributed proportionately between these subclasses.

(7) Each member of the industrial and commercial user class described under paragraph (b)(4)(ii) of this section and of the user class which pays no ad valorem taxes or receives substantial credits in paying such taxes described under paragraph (b)(4)(iii) of this section shall pay its share of the costs of operation and maintenance of the treatment works based upon charges for actual use (in accordance with § 35.929–1(a)). The grantee may use its ad valorem tax system to collect, in whole or in part, those charges from members of the industrial and large commercial class where the following conditions are met:

(i) A portion or all of the ad valorem tax rate assessed to members of this class has been specifically designated to pay the costs of operation and maintenance of the treatment works, and that designated rate is uniformly applied to all members of this class:

(ii) A system of surcharges and rebates is employed to adjust the revenues from the ad valorem taxes collected from each user of this class in accordance with the rate designated

under paragraph (b)(7)(i) of this section, such that each member of the class pays a total charge for its share of the costs of operation and maintenance based upon actual use.

§ 35.929–2 General requirements for all user charge systems.

User charge systems based on actual use under § 35.929–1(a) or ad valorem taxes under § 35.929–1(b) shall also meet the following requirements:

(a) *Initial basis for operation and maintenance charges.* For the first year of operation, operation and maintenance charges shall be based upon past experience for existing treatment works or some other method that can be demonstrated to be appropriate to the level and type of services provided.

(b) *Biennial review of operation and maintenance charges.* The grantee shall review not less often than every 2 years the waste water contribution of users and user classes, the total costs of operation and maintenance of the treatment works, and its approved user charge system. The grantee shall revise the charges for users or user classes to accomplish the following:

(1) Maintain the proportionate distribution of operation and maintenance costs among users and user classes as required herein;

(2) Generate sufficient revenue to pay the total operation and maintenance costs necessary to the proper operation and maintenance (including replacement) of the treatment works; and

(3) Apply excess revenues collected from a class of users to the costs of operation and maintenance attributable to that class for the next year and adjust the rate accordingly.

(c) *Toxic pollutants.* The user charge system shall provide that each user which discharges any toxic pollutants which cause an increase in the cost of managing the effluent or the sludge of the grantee's treatment works shall pay for such increased costs.

(d) *Charges for operation and maintenance for extraneous flows.* The user charge system shall provide that the costs of operation and maintenance for all flow not directly attributable to users (i.e., infiltration/inflow) be distributed among all users of the grantee's treatment works system based upon either of the following:

(1) In the same manner that it distributes the costs of operation and maintenance among users (or user classes) for their actual use, or

(2) Under a system which uses one of any combination of the following factors on a reasonable basis:

(i) Flow volume of the users;

(ii) Land area of the users;

(iii) Number of hookups or discharges to the users;

(iv) Property valuation of the users, if the grantee has a user charge system based on ad valorem taxes approved under § 35.929–1(b).

(e) *Adoption of system.* One or more municipal legislative enactments or other appropriate authority must incorporate the user charge system. If the project is a regional treatment system accepting wastewaters from other municipalities, the subscribers receiving waste treatment services from the grantee shall adopt user charge systems in accordance with section 204(b)(1)(A) of the Act and §§ 35.929 through 35.929–3. These user charge systems shall also be incorporated in appropriate municipal legislative enactments or other appropriate authority of all municipalities contributing wastes to the treatment works. The public shall be informed of the financial impact of the user charge system on them and shall be consulted prior to adoption of the system, in accordance with 40 CFR part 25.

(f) *Notification.* Each user charge system must provide that each user be notified, at least annually, in conjunction with a regular bill, of the rate and that portion of the user charges or ad valorem taxes which are attributable to waste water treatment services.

(g) *Inconsistent agreements.* The grantee may have preexisting agreements which address: (1) The reservation of capacity in the grantee's treatment works, or (2) the charges to be collected by the grantee in providing wastewater treatment services or reserving capacity. The user charge system shall take precedence over any terms or conditions of agreements or contracts between the grantee and users (including industrial users, special districts, other municipalities, or

Federal agencies or installations) which are inconsistent with the requirements of section 204(b)(1)(A) of the Act and these regulations.

(h) *Costs of pretreatment program.* A user charge system submitted by a municipality with an approved pretreatment program shall provide that the costs necessary to carry out the program and to comply with any applicable requirements of section 405 of the Act and related regulations are included within the costs of operation and maintenance of the system and paid through user charges, or are paid in whole or in part by other identified sources of funds.

[43 FR 44049, Sept. 27, 1978, as amended at 44 FR 10304, Feb. 16, 1979]

§ 35.929–3 Implementation of the user charge system.

(a) When a grantee's user charge system is approved, implementation of the approved system shall become a condition of the grant.

(b) The grantee shall maintain such records as are necessary to document compliance with these regulations.

(c) Appendix B to this subpart contains guidelines with illustrative examples of acceptable user charge systems.

(d) The Regional Administrator may review, no more often than annually, a grantee's user charge system to assure that it continues to meet the requirements of §§ 35.929–1 through 35.929–3.

§ 35.930 Award of grant assistance.

The Regional Administrator's approval of an application or amendments to it through execution of a grant agreement (including a grant amendment), in accordance with § 30.345 of this subchapter, shall constitute a contractual obligation of the United States for the payment of the Federal share of the allowable project costs, as determined by the Regional Administrator. Information about the approved project furnished in accordance with § 35.920–3 shall be considered incorporated in the grant agreement.

§ 35.930–1 Types of projects.

(a) The Regional Administrator is authorized to award grant assistance for the following types of projects:

(1) *Step 1.* A facilities plan and related step 1 elements (see § 35.920–3(b)), if he determines that the applicant has submitted the items required under § 35.920–3(a); (In the case of grant assistance awarded solely for the acquisition of eligible land, the following provisions are deferred until the award of the ensuing step 3 assistance for the construction of facilities: Sections 35.925–10, 35.925–11(b), 35.935–12 (c) and (d), 35.935–13(c), 35.935–15(c), 35.935–16 (b) and (c));

(2) *Step 2.* Construction drawings and specifications, if he determines that the applicant has submitted the items required under § 35.920–3(b);

(3) *Step 3.* Building and erection of a treatment works, if he determines that the applicant has submitted the items required under § 35.920–3(c); or

(4) *Steps 2 and 3.* A combination of design (step 2) and construction (step 3) for a treatment works (see § 35.909) if he determines that the applicant has submitted the items required under § 35.920–3(d).

(b) The Regional Administrator may award Federal assistance by a grant or grant amendment from any allotment or reallotment available to a State under § 35.910 et seq. for payment of 100 percent of the cost of construction of treatment works required to train and upgrade waste treatment works operations and maintenance personnel and for the costs of other operator training programs. Costs of other operator training programs are limited to mobile training units, classroom rental, specialized instructors, and instructional material, under section 109(b) of the Act.

(1) Where a grant is made to serve two or more States, the Administrator is authorized to make an additional grant for a supplemental facility in each State. The Federal funds awarded under section 109(b) to any State for all training facilities or programs shall not exceed $500,000.

(2) Any grantee who received a grant under section 109(b) before December 27, 1977, is eligible to have the grant increased by funds made available under the Act, not to exceed 100 percent of eligible costs.

[43 FR 44049, Sept. 27, 1978, as amended at 44 FR 39340, July 5, 1979]

§ 35.930–2 Grant amount.

The grant agreement shall set forth the amount of grant assistance. The grant amount may not exceed the amount of funds available from the State allotments and reallotments under § 35.910 *et seq.* Grant payments will be limited to the Federal share of allowable project costs incurred within the grant amount or any increases effected through grant amendments (see § 35.955).

§ 35.930–3 Grant term.

The grant agreement shall establish the period within which the project must be completed, in accordance with § 30.345–1 of this chapter. This time period is subject to extension for excusable delay, at the discretion of the Regional Administrator.

§ 35.930–4 Project scope.

The grant agreement must define the scope of the project for which Federal assistance is awarded under the grant. The project scope must include a step or an identified segment. Grant assistance may be awarded for a segment of step 3 treatment works construction, when that segment in and of itself does not provide for achievement of applicable effluent discharge limitations, if:

(a) The segment is to be a component of an operable treatment works which will achieve the applicable effluent discharge limitations; and

(b) A commitment for completion of the entire treatment works is submitted to the Regional Administrator and that commitment is reflected in a special condition in the grant agreement.

§ 35.930–5 Federal share.

(a) *General.* The grant shall be 75 percent of the estimated total cost of construction that the Regional Administrator approves in the grant agreement, except as otherwise provided in paragraphs (b) and (c) of this section and in §§ 35.925–15, 35.925–16, 35.925–17, 35.930–1(b), and paragraph 10 of appendix A.

(b) *Innovative and alternative technology.* In accordance with § 35.908(b), the amount of any step 2, step 3, or step 2+3 grant assistance awarded from funds allotted for fiscal years 1979, 1980, and 1981 shall be 85 percent of the estimated cost of construction for those eligible treatment works or significant portions of them that the Regional Administrator determines meet the criteria for innovative or alternative technology in appendix E. These grants depend on the availability of funds from the reserve under § 35.915–1(b). The proportional State contribution to the non-Federal share of construction costs for 85-percent grants must be the same as or greater than the proportional State contribution (if any) to the non-Federal share of eligible construction costs for all treatment works which receive 75-percent grants in the State.

(c) *Modification and replacement of innovative and alternative projects.* In accordance with § 35.908(c) and procedures published by EPA, the Regional Administrator may award grant assistance to fund 100 percent of the eligible costs of the modification or replacement of any treatment works constructed with grant assistance based upon a Federal share of 85 percent under paragraph (b) of this section.

§ 35.930–6 Limitation on Federal share.

The grantee must exert its best efforts to perform the project work as specified in the grant agreement within the approved cost ceiling. If at any time the grantee believes that the costs which it expects to incur in the performance of the project will exceed or be substantially less than the previously approved estimated total project costs, the grantee must notify the Regional Administrator and the State agency promptly in writing. As soon as practicable, the grantee must give the revised estimate of total cost for the performance of the project (see § 30.900 of this subchapter). Delay in submission of the notice and excess cost information may prejudice approval of an increase in the grant amount. The United States shall not be obligated to pay for costs incurred in excess of the approved grant amount or any amendment to it until the State has approved an increase in the grant amount from available allotments under § 35.915 and the Regional Administrator has issued a written grant amendment under § 35.955.

§ 35.935 Grant conditions.

In addition to the EPA general grant conditions (subpart C and appendix A to part 30 of this subchapter), each treatment works grant shall be subject to the following conditions:

§ 35.935–1 Grantee responsibilities.

(a) Review or approval of project plans and specifications by or for EPA is for administrative purposes only and does not relieve the grantee of its responsibility to design, construct, operate, and maintain the treatment works described in the grant application and agreement.

(b) By its acceptance of the grant, the grantee agrees to complete the treatment works in accordance with the facilities plan, plans and specifications, and related grant documents approved by the Regional Administrator, and to maintain and operate the treatment works to meet the enforceable requirements of the Act for the design life of the treatment works. The Regional Administrator is authorized to seek specific enforcement or recovery of funds from the grantee, or to take other appropriate action (see § 35.965), if he determines that the grantee has failed to make good faith efforts to meet its obligations under the grant.

(c) The grantee agrees to pay, pursuant to section 204(a)(4) of the Act, the non-Federal costs of treatment works construction associated with the project and commits itself to complete the construction of the operable treatment works and complete waste treatment system (see definitions in § 35.905) of which the project is a part.

(d) The Regional Administrator may include special conditions in the grant or administer this subpart in the manner which he determines most appropriate to coordinate with, restate, or enforce NPDES permit terms and schedules.

§ 35.935–2 Procurement.

The grantee and party to any subagreement must comply with the applicable provisions of §§ 35.935 through 35.939 with respect to procurement for step 1, 2, or 3 work. The Regional Administrator will cause appropriate review of grantee procurement to be made.

§ 35.935–3 Property.

(a) The grantee must comply with the property provisions of § 30.810 et seq. of this subchapter with respect to all property (real and personal) acquired with project funds.

(b) With respect to real property (including easements) acquired in connection with the project, whether such property is acquired with or in anticipation of EPA grant assistance or solely with funds furnished by the grantee or others:

(1) The acquisition must be conducted in accordance with part 4 of this chapter;

(2) Any displacement of a person by or as a result of any acquisition of the real property shall be conducted under the applicable provisions of part 4 of this chapter; and

(3) The grantee must obtain (before initiation of step 3 construction), and must thereafter retain, a fee simple or such estate or interest in the site of a step 3 project, and rights of access, as the Regional Administrator finds sufficient to assure undisturbed use and possession for the purpose of construction and operation for the estimated life of the project. If a step 3 project serves more than one municipality, the grantee must insure that the participating municipalities have, or will have before the initiation of step 3 construction, such interests or rights in land as the Regional Administrator finds sufficient to assure their undisturbed utilization of the project site for the estimated life of the project.

(c) With respect to real property acquired with EPA grant assistance, the grantee must defer acquisition of such property until approval of the Regional Administrator is obtained under § 35.940–3.

§ 35.935–4 Step 2+3 projects.

A grantee which has received step 2+3 grant assistance must make submittals required by § 35.920–3(c), together with approvable user charge and industrial cost recovery systems and a preliminary plan of operation. The Regional Administrator shall give written approval of these submittals before advertising for bids on the step 3 construction portion of the step 2+3

project. The cost of step 3 work initiated before such approval is not allowable. Failure to make the above submittals as required is cause for invoking sanctions under § 35.965.

§ 35.935–5 Davis-Bacon and related statutes.

Before soliciting bids or proposals for step 3-type work, the grantee must consult with the Regional Administrator concerning compliance with Davis-Bacon and other statutes referenced in § 30.415 *et seq.* of this subchapter.

§ 35.935–6 Equal employment opportunity.

Contracts involving step 3-type work of $10,000 or more are subject to equal employment opportunity requirements under Executive Order 11246 (see part 8 of this chapter). The grantee must consult with the Regional Administrator about equal employment opportunity requirements before issuance of an invitation for bids where the cost of construction work is estimated to be more than $1 million or where required by the grant agreement.

§ 35.935–7 Access.

The grantee must insure that EPA and State representatives will have access to the project work whenever it is in preparation or progress. The grantee must provide proper facilities for access and inspection. The grantee must allow the Regional Administrator, the Comptroller General of the United States, the State agency, or any authorized representative, to have access to any books, documents, plans, reports, papers, and other records of the contractor which are pertinent to the project for the purpose of making audit, examination, excerpts, copies and transcriptions. The grantee must insure that a party to a subagreement will provide access to the project work, sites, documents, and records. See §§ 30.605 and 30.805 of this subchapter, clause 9 of appendix C–1 to this subpart, and clause 10 of appendix C–2 to this subpart.

§ 35.935–8 Supervision.

In the case of any project involving Step 3, the grantee will provide and maintain competent and adequate engineering supervision and inspection of the project to ensure that the construction conforms with the approved plans and specifications.

§ 35.935–9 Project initiation and completion.

(a) The grantee agrees to expeditiously initiate and complete the step 1, 2, or 3 project, or cause it to be constructed and completed, in accordance with the grant agreement and application, including the project progress schedule, approved by the Regional Administrator. Failure of the grantee to promptly initiate and complete step 1, 2, or 3 project construction may result in annulment or termination of the grant.

(b) No date reflected in the grant agreement, or in the project completion schedule, or extension of any such date, shall modify any compliance date established in an NPDES permit. It is the grantee's obligation to request any required modification of applicable permit terms or other enforceable requirements.

(c) The invitation for bids for step 3 project work is expected to be issued promptly after grant award. Generally this action should occur within 90 to 120 days after award unless compliance with State or local laws requires a longer period of time. The Regional Administrator shall annul or terminate the grant if initiation of all significant elements of step 3 construction has not occurred within 12 months of the award for the step 3 project (or approval of plans and specifications, in the case of a step 2+3 project). (See definition of ''initiation of construction'' under ''construction'' in § 35.905.) However, the Regional Administrator may defer (in writing) the annulment or termination for not more than 6 additional months if:

(1) The grantee has applied for and justified the extension in writing to the Regional Administrator;

(2) The grantee has given written notice of the request for extension to the NPDES permit authority;

(3) The Regional Administrator determines that there is good cause for the delay in initiation of project construction; and

(4) The State agency concurs in the extension.

§ 35.935–10 Copies of contract documents.

In addition to the notification of project changes under § 30.900 of this chapter, a grantee must promptly submit to the Regional Administrator a copy of any prime contract or modification of it and of revisions to plans and specifications.

§ 35.935–11 Project changes.

(a) In addition to the notification of project changes required under § 30.900–1 of this chapter, the Regional Administrator's and (where necessary) the State agency's prior written approval is required for:

(1) Project changes which may—

(i) Substantially alter the design and scope of the project;

(ii) Alter the type of treatment to be provided;

(iii) Substantially alter the location, size, capacity, or quality of any major item of equipment; or

(iv) Increase the amount of Federal funds needed to complete the project.

However, prior EPA approval is not required for changes to correct minor errors, minor changes, or emergency changes; and

(2) Subagreement amendments amounting to more than $100,000 for which EPA review is required under §§ 35.937–6(b) and 35.938–5 (d) and (g).

(b) No approval of a project change under § 30.900 of this chapter shall obligate the United States to any increase in the amount of the grant or grant payments unless a grant increase is also approved under § 35.955. This does not preclude submission or consideration of a request for a grant amendment under § 30.900–1 of this chapter.

§ 35.935–12 Operation and maintenance.

(a) The grantee must make provision satisfactory to the Regional Administrator for assuring economic and effective operation and maintenance of the treatment works in accordance with a plan of operation approved by the State water pollution control agency or, as appropriate, the interstate agency.

(b) As a minimum, the plan shall include provision for:

(1) An operation and maintenance manual for each facility;

(2) An emergency operating and response program;

(3) Properly trained management, operation and maintenance personnel;

(4) Adequate budget for operation and maintenance;

(5) Operational reports;

(6) Provisions for laboratory testing and monitoring adequate to determine influent and effluent characteristics and removal efficiencies as specified in the terms and conditions of the NPDES permit;

(7) An operation and maintenance program for the sewer system.

(c) Except as provided in paragraphs (d) and (e) of this section, the Regional Administrator shall not pay—

(1) More than 50 percent of the Federal share of any step 3 project unless the grantee has furnished a draft of the operation and maintenance manual for review, or adequate evidence of timely development of such a draft; or

(2) More than 90 percent of the Federal share unless the grantee has furnished a satisfactory final operation and maintenance manual.

(d) In projects where segmenting of an operable treatment works has occurred, the Regional Administrator shall not pay—

(1) More than 50 percent of the Federal share of the total of all interdependent step 3 segments unless the grantee has furnished a draft of the operation and maintenance manual for review, or adequate evidence of timely development of such a draft, or

(2) More than 90 percent of the Federal share of the total of all interdependent step 3 segments unless the grantee has furnished a satisfactory final operation and maintenance manual.

(e) In multiple facility projects where an element or elements of the treatment works are operable components and have been completely constructed and placed in operation by the grantee, the Regional Administrator shall not make any additional step 3 payment unless the operation and maintenance manual (or those portions associated with the operating elements of the

treatment works) submitted by the grantee has been approved by the Regional Administrator.

§ 35.935–13 Submission and approval of user charge systems.

The grantee shall obtain the approval of the Regional Administrator of its system of user charges. (See also § 35.929 *et seq.*)

(a) *Step 3 grant assistance awarded under regulations promulgated on February 11, 1974,* (1) Except as paragraph (a)(2) of this section provides, the grantee must obtain the Regional Administrator's approval of its system of user charges based on actual use which complies with § 35.929–1(a). The Regional Administrator shall not pay more than 50 percent of the Federal share of any step 3 project unless the grantee has submitted adequate evidence of timely development of its system of user charges nor shall the Regional Administrator pay more than 80 percent of the Federal share unless he has approved the system.

(2) A grantee which desires approval of a user charge system based on ad valorem taxes in accordance with § 35.929–1(b) shall submit to the Regional Administrator by July 24, 1978, evidence of compliance of its system with the criteria in § 35.929–1 (b)(1) through (b)(3). As soon as possible, the Regional Administrator shall advise the grantee if the system complies with § 35.929–1 (b)(1). The Regional Administrator's determination may be appealed in accordance with subpart J, ''Disputes,'' of part 30 of this subchapter.

(i) *Grantees whose ad valorem tax systems meet the criteria of § 35.929–1 (b)(1) through (b)(3).* Any step 3 payments held by the Regional Administrator at 50 percent or 80 percent for failure to comply with the requirement for development of a user charge system shall be released. However, the grantee shall obtain approval of its user charge system by June 30, 1979 or no further payments will be made until the sytem is approved and the grants may be terminated or annulled.

(ii) *Grantees whose ad valorem tax systems do not meet the criteria of § 35.929–1 (b)(1) through (b)(3).* Step 3 grants will continue to be administered in accordance with paragraph (a)(1) of this section.

(b) *Step 3 grant assistance awarded after April 24, 1978, but before July 1, 1979.* The grantee must obtain approval of its user charge system based on actual use or ad valorem taxes before July 1, 1979. The Regional Administrator may not make any payments on these grants, may terminate or annul these grants, and may not award any new step 3 grants to the same grantee after June 30, 1979, if the user charge system has not been approved. The Regional Administrator shall approve the grantee's user charge or ad valorem tax rates and the ordinance required under § 35.929–2(e) and the grantee shall enact them before the treatment works constructed with the grant are placed in operation.

(c) *Step 3 grant assistance awarded after June 30, 1979.* The Regional Administrator may not award step 3 grant assistance unless he has approved the user charge system based on actual use or ad valorem taxes. The Regional Administrator shall approve the grantee's user charge or ad valorem tax rates and the ordinance required under § 35.929–2(e) and the grantee shall enact them before the treatment works constructed with the grant are placed in operation.

§ 35.935–14 Final inspection.

The grantee shall notify the Regional Administrator through the State agency of the completion of step 3 project construction. The Regional Administrator shall cause final inspection to be made within 60 days of the receipt of the notice. When final inspection is completed and the Regional Administrator determines that the treatment works have been satisfactorily constructed in accordance with the grant agreement, the grantee may make a request for final payment under § 35.945(e).

§ 35.935–15 Submission and approval of industrial cost recovery system.

The grantee shall obtain the approval of the Regional Administrator of its system of industrial cost recovery. (See also § 35.928 *et seq.*)

(a) *Step 3 grant assistance awarded under regulations promulgated on February 11, 1974.* (1) The grantee must obtain the approval of the Regional Administrator for the system of industrial cost recovery (see § 35.928 *et seq.*). The Regional Administrator shall not pay more than 50 percent of the Federal share of any step 3 project unless the grantee has submitted adequate evidence of timely development of its system of industrial cost recovery nor shall the Regional Administrator pay more than 80 percent of the Federal share unless he has approved the system.

(2) Payments of grantees held under paragraph (a)(1) of this section shall be released after April 25, 1978. However, the grantee shall obtain approval of its industrial cost recovery system by June 30, 1979, or no further payments will be made until the system is approved.

(b) *Step 3 grant assistance awarded after April 24, 1978, but before July 1, 1979.* The grantee must obtain approval of its industrial cost recovery system under these regulations, except for the ordinance and rates, before July 1, 1979. The Regional Administrator shall not make any payments on these grants and shall not award any new step 3 grants to the same grantee after June 30, 1979, if the industrial cost recovery system, except for the ordinance and rates, has not been approved. The grantee shall enact the ordinance required under § 35.928–1(h) and submit the ordinance and industrial cost recovery system rates to the Regional Administrator who must approve the ordinance before the treatment works are placed in operation.

(c) *Step 3 grant assistance awarded after June 30, 1979.* The grantee must obtain the Regional Administrator's approval of the industrial cost recovery system under these regulations, except for the ordinance and rates, before grant award. The grantee shall enact the ordinance required under § 35.928–1(h) and submit the ordinance and industrial cost recovery system rates to the Regional Administrator who must approve the ordinance before the treatment works are placed in operation.

§ 35.935–16 Sewer use ordinance and evaluation/rehabilitation program.

(a) The grantee must obtain the approval of the Regional Administrator of its sewer use ordinance under § 35.927–4.

(b) Except as provided in paragraphs (c) and (d) of this section, the Regional Administrator shall not pay more than 80 percent of the Federal share of any step 3 project unless he has approved the grantee's sewer use ordinance, and the grantee is complying with the sewer system evaluation and rehabilitation schedule incorporated in the grant agreement under § 35.927–5.

(c) In projects where segmenting of an operable treatment works has occurred, the Regional Administrator shall not pay more than 80 percent of the Federal share of the total of all interdependent step 3 segments unless he has approved the grantee's sewer use ordinance and the grantee is complying with the sewer system evaluation and rehabilitation schedule incorporated in the grant agreement under § 35.927–5.

(d) In mulitple facility projects where an element or elements of the treatment works are operable components and have been completely constructed and placed in operation by the grantee, the Regional Administrator shall not make any additional step 3 payment unless he has approved the grantee's sewer use ordinance and the grantee is complying with the sewer system evaluation and rehabilitation schedule incorporated in the grant agreement under § 35.927–5.

§ 35.935–17 Training facility.

If assistance has been provided for the construction of a treatment works required to train and upgrade waste treatment personnel under §§ 35.930–1(b) and 35.920–3(e), the grantee must operate the treatment works as a training facility for a period of at least 10 years after construction is completed.

§ 35.935–18 Value engineering.

A grantee must comply with the applicable value engineering requirements of § 35.926.

§ 35.935–19 Municipal pretreatment program.

The grantee must obtain approval by the Regional Administrator of the municipal pretreatment program in accordance with part 403 of this chapter. Prior to granting such approval, the Regional Administrator shall not pay more than 90 percent of the Federal share of any step 3 project or cost of step 3 work under a step 2+3 project awarded after October 1, 1978, except that for any such grant assistance awarded before December 31, 1980, the Regional Administrator may continue grant payments if he determines that significant progress has been made (and is likely to continue) toward the development of an approvable pretreatment program and that withholding of grant payments would not be in the best interest of protecting the environment.

§ 35.935–20 Innovative processes and techniques.

If the grantee receives 85-percent grant assistance for innovative processes and techniques, the following conditions apply during the 5-year period following completion of construction:

(a) The grantee shall permit EPA personnel and EPA designated contractors to visit and inspect the treatment works at any reasonable time in order to review the operation of the innovative processes or techniques.

(b) If the Regional Administrator requests, the grantee will provide EPA with a brief written report on the construction, operation, and costs of operation of the innovative processes or techniques.

§ 35.936 Procurement.

(a) Sections 35.936 through 35.939 set forth policies and minimum standards for procurement of architectural or engineering services as defined in § 35.937 and construction contracts as described in § 35.938 by grantees under all steps of grants for construction of treatment works. Acquisition of real property shall be conducted in accordance with part 4, subpart F of this chapter. Other procurements of goods and services shall be conducted in accordance with the provisions of part 33 of this subchapter.

(b) This subpart does not apply to work beyond the scope of the project for which grant assistance is awarded (i.e., ineligible work).

§ 35.936–1 Definitions.

As used in §§ 35.936 through 35.939, the following words and terms shall have the meaning set forth below. All terms not defined herein shall have the meaning given to them in § 30.135 of this subchapter, and in § 35.905.

(a) *Grant agreement.* The written agreement and amendments thereto between EPA and a grantee in which the terms and conditions governing the grant are stated and agreed to by both parties under § 30.345 of this subchapter.

(b) *Subagreement.* A written agreement between an EPA grantee and another party (other than another public agency) and any tier of agreement thereunder for the furnishing of services, supplies, or equipment necessary to complete the project for which a grant was awarded, including contracts and subcontracts for personal and professional services, agreements with consultants and purchase orders, but excluding employment agreements subject to State or local personnel systems. (See §§ 35.937–12 and 35.938–9 regarding subcontracts of any tier under prime contracts for architectural or engineering services or construction awarded by the grantee—generally applicable only to subcontracts in excess of $10,000.)

(c) *Contractor.* A party to whom a subagreement is awarded.

(d) *Grantee.* Any municipality which has been awarded a grant for construction of a treatment works under this subpart. In addition, where appropriate in §§ 35.936 through 35.939, grantee may also refer to an applicant for a grant.

§ 35.936–2 Grantee procurement systems; State or local law.

(a) *Grantee procurement systems.* Grantees may use their own procurement systems and procedures which meet applicable requirements of State, territorial, or local laws and ordinances to the extent that these systems and procedures do not conflict

with the minimum requirements of this subchapter.

(b) *State or local law.* The Regional Administrator will generally rely on a grantee's determination regarding the application of State or local law to issues which are primarily determined by such law. The Regional Administrator may request the grantee to furnish a written legal opinion adequately addressing any such legal issues. The Regional Administrator will accept the grantee's determination unless he finds that it does not have a rational basis.

(c) *Preference.* State or local laws, ordinances, regulations or procedures which effectively give local or in-State bidders or proposers preference over other bidders or proposers shall not be employed in evaluating bids or proposals for subagreements under a grant.

§ 35.936–3 Competition.

EPA's policy is to encourage free and open competition appropriate to the type of project work to be performed.

§ 35.936–4 Profits.

Only fair and reasonable profits may be earned by contractors in subagreements under EPA grants. See § 35.937–7 for discussion of profits under negotiated subagreements for architectural or engineering services, and § 35.938–5(f) for discussion of profits under negotiated change orders to construction contracts. Profit included in a formally advertised, competitively bid, fixed price construction contract awarded under § 35.938 is presumed reasonable.

§ 35.936–5 Grantee responsibility.

(a) The grantee is responsible for the administration and successful accomplishment of the project for which EPA grant assistance is awarded. The grantee is responsible for the settlement and satisfaction of all contractual and administrative issues arising out of subagreements entered into under the grant (except as § 35.936–6 provides) in accordance with sound business judgment and good administrative practice. This includes issuance of invitations for bids or requests for proposals, selection of contractors, award of contracts, protests of award, claims, disputes, and other related procurement matters.

(b) With the prior written approval of the Regional Administrator, the grantee may retain an individual or firm to perform these functions. Such an agent acts for the grantee and is subject to the provisions of this subpart which apply to the grantee.

(c) In accordance with § 35.970, a grantee may request technical and legal assistance from the Regional Administrator for the administration and enforcement of any contract related to treatment works that are assisted by an EPA grant. The Regional Administrator's assistance does not release the grantee from those responsibilities identified in paragraph (a) of this section.

§ 35.936–6 EPA responsibility.

Generally, EPA will only review grantee compliance with Federal requirements applicable to a grantee's procurement. However, where specifically provided in this chapter (e.g., §§ 8.8(j) and 35.939), EPA is responsible for determining compliance with Federal requirements.

§ 35.936–7 Small and minority business.

Grantees shall make positive efforts to use small business and minority-owned business sources of supplies and services. Such efforts should allow these sources the maximum feasible opportunity to compete for subagreements to be performed using Federal grant funds.

§ 35.936–8 Privity of contract.

Neither EPA nor the United States shall be a party to any subagreement (including contracts or subcontracts), nor to any solicitation or request for proposals. (See §§ 35.937–9(a), 35.938–4(c)(5), and appendices C–1 and C–2 to this subpart for the required solicitation statement and contract provisions.) However, in accordance with § 35.970 the Regional Administrator, if a grantee requests, may provide technical and legal assistance in the administration and enforcement of any contract related to treatment works for which an EPA grant was made.

§35.936–9 Disputes.

Only an EPA grantee may initiate and prosecute an appeal to the Administrator under the disputes provision of a grant with respect to its subagreements (see subpart J of part 30 of this subchapter). Neither a contractor nor a subcontractor may prosecute an appeal under the disputes provisions of a grant in its own name or interest.

§35.936–10 Federal procurement regulations.

Regulations applicable to direct Federal procurement shall not be applicable to subagreements under grants except as stated in this subchapter.

§35.936–11 General requirements for subagreements.

Subagreements must:

(a) Be necessary for and directly related to the accomplishment of the project work;

(b) Be in the form of a bilaterally executed written agreement (except for small purchases of $10,000 or less);

(c) Be for monetary or in-kind consideration; and

(d) Not be in the nature of a grant or gift.

§35.936–12 Documentation.

(a) Procurement records and files for purchases in excess of $10,000 shall include the following:

(1) Basis for contractor selection;

(2) Justification for lack of competition if competition appropriate to the type of project work to be performed is required but is not obtained; and

(3) Basis for award cost or price.

(b) The grantee or contractors of the grantee must retain procurement documentation required by §30.805 of this subchapter and by this subpart, including a copy of each subagreement, for the period of time specified in §30.805. The documentation is subject to all the requirements of §30.805. A copy of each subagreement must be furnished to the project officer upon request.

§35.936–13 Specifications.

(a) *Nonrestrictive specifications.* (1) No specification for bids or statement of work in connection with such works shall be written in such a manner as to contain proprietary, exclusionary, or discriminatory requirements other than those based upon performance, unless such requirements are necessary to test or demonstrate a specific thing or to provide for necessary interchangeability of parts and equipment, or at least two brand names or trade names of comparable quality or utility are listed and are followed by the words ''or equal.'' If brand or trade names are specified, the grantee must be prepared to identify to the Regional Administrator or in any protest action the salient requirements (relating to the minimum needs of the project) which must be met by any offeror. The single base bid method of solicitation for equipment and parts for determination of a low, responsive bidder may not be utilized. With regard to materials, if a single material is specified, the grantee must be prepared to substantiate the basis for the selection of the material.

(2) Project specifications shall, to the extent practicable, provide for maximum use of structures, machines, products, materials, construction methods, and equipment which are readily available through competitive procurement, or through standard or proven production techniques, methods, and processes, except to the extent that innovative technologies may be used under §35.908 of this subpart.

(b) *Sole source restriction.* A specification shall not require the use of structures, materials, equipment, or processes which are known to be available only from a sole source, unless the Regional Administrator determines that the grantee's engineer has adequately justified in writing that the proposed use meets the particular project's minimum needs or the Regional Administrator determines that use of a single source is necessary to promote innovation (see §35.908). Sole source procurement must be negotiated under §33.500 et seq., including full cost review.

(c) *Experience clause restriction.* The general use of experience clauses requiring equipment manufacturers to have a record of satisfactory operation for a specified period of time or of bonds or deposits to guarantee replacement in the event of failure is restricted to special cases where the grantee's engineer adequately justifies

any such requirement in writing. Where such justification has been made, submission of a bond or deposit shall be permitted instead of a specified experience period. The period of time for which the bond or deposit is required should not exceed the experience period specified. No experience restriction will be permitted which unnecessarily reduces competition or innovation.

(d) *Buy American*—(1) *Definitions.* As used in this subpart, the following definitions apply:

(i) *Construction material* means any article, material, or supply brought to the construction site for incorporation in the building or work.

(ii) *Component* means any article, material, or supply directly incorporated in construction material.

(iii) *Domestic construction material* means an unmanufactured construction material which has been mined or produced in the United States, or a manufactured construction material which has been manufactured in the United States if the cost of its components which are mined, produced, or manufactured in the United States exceeds 50 percent of the cost of all its components.

(iv) *Nondomestic construction material* means a construction material other than a domestic construction material.

(2) *Domestic preference.* Domestic construction material may be used in preference to nondomestic materials if it is priced no more than 6 percent higher than the bid or offered price of the nondomestic materials including all costs of delivery to the construction site, any applicable duty, whether or not assessed. Computations will normally be based on costs on the date of opening of bids or proposals.

(3) *Waiver.* The Regional Administrator may waive the Buy American provision based upon those factors that he considers relevant, including:

(i) Such use is not in the public interest;

(ii) The cost is unreasonable;

(iii) The Agency's available resources are not sufficient to implement the provision, subject to the Deputy Administrator's concurrence;

(iv) The articles, materials, or supplies of the class or kind to be used or the articles, materials, or supplies from which they are manufactured are not mined, produced, or manufactured in the United States in sufficient and reasonably available commercial quantities or satisfactory quality for the particular project; or

(v) Application of this provision is contrary to multilateral government procurement agreements, subject to the Deputy Administrator's concurrence.

(4) *Contract provision.* Notwithstanding any other provision of this subpart, bidding documents and construction contracts for any step 3 project for which the Regional Administrator receives an application after February 1, 1978, shall contain the ''Buy American'' provision which requires use of domestic construction materials in preference to nondomestic construction materials.

(5) *Substitution.* If a nondomestic construction material or component is proposed for use, a bidder or contractor may substitute an approved domestic material or component (at no change in price), if necessary to comply with this subsection.

(6) *Procedures.* The Regional Administrator may use the appropriate procedures of § 35.939 in making the determinations with respect to this subsection. He shall generally observe the Buy American procedures, regulations, precedents, and requirements of other Federal departments and agencies.

[43 FR 44049, Sept. 27, 1978, as amended at 44 FR 37596, June 27, 1979; 44 FR 39340, July 5, 1979]

§ 35.936–14 Force account work.

(a) A grantee must secure the project officer's prior written approval for use of the force account method for (1) any step 1 or step 2 work in excess of $10,000; (2) any sewer rehabilitation work in excess of $25,000 performed during step 1 (see § 35.927–3(a)); or (3) any step 3 work in excess of $25,000; unless the grant agreement stipulates the force account method.

(b) The project officer's approval shall be based on the grantee's demonstration that he possesses the necessary competence required to accomplish such work and that (1) the work

can be accomplished more economically by the use of the force account method, or (2) emergency circumstances dictate its use.

(c) Use of the force account method for step 3 construction shall generally be limited to minor portions of a project.

§ 35.936–15 Limitations on subagreement award.

No subagreement shall be awarded:

(a) To any person or organization which does not meet the responsibility standards in § 30.340–2 (a) through (d) and (g) of this subchapter;

(b) If any portion of the contract work not exempted by § 30.420–3(b) of this subchapter will be performed at a facility listed by the Director, EPA Office of Federal Activities, in violation of the antipollution requirements of the Clean Air Act and the Clean Water Act, as set forth in § 30.420–3 of this subchapter and 40 CFR part 15 (Administration of the Clean Air Act and the Federal Water Pollution Control Act with respect to Federal contracts, grants, or loans); or

(c) To any person or organization which is ineligible under the conflict of interest requirements of § 30.420–4 of this subchapter.

§ 35.936–16 Code or standards of conduct.

(a) The grantee must maintain a code or standards of conduct which shall govern the performance of its officers, employees, or agents in the conduct of project work, including procurement and expenditure of project funds. The grantee's officers, employees, or agents shall neither solicit nor accept gratuities, favors, or anything of monetary value from contractors or potential contractors. The grantee must avoid personal or organizational conflicts of interest or noncompetitive procurement practices which restrict or eliminate competition or otherwise restrain trade.

(b) To the extent permissible by State or local law or formal institutional requirements and procedures, the standards shall provide for penalties, sanctions, or other adequate disciplinary actions to be instituted for project-related violations of law or of the code or standards of conduct by either the grantee officers, employees, or agents, or by contractors or their agents.

(c) The grantee must inform the project officer in writing of each serious allegation of a project-related violation and of each known or proven project-related violation of law or code or standards of conduct, by its officers, employees, contractors, or by their agents. The grantee must also inform the project officer of the prosecutive or disciplinary action the grantee takes, and must cooperate with Federal officials in any Federal prosecutive or disciplinary action. Under § 30.245 of this subchapter, the project officer must notify the Director, EPA Security and Inspection Division, of all notifications from the grantee.

(d) EPA shall cooperate with the grantee in its disciplinary or prosecutive actions taken for any apparent project-related violations of law or of the grantee's code or standards of conduct.

§ 35.936–17 Fraud and other unlawful or corrupt practices.

All procurements under grants are covered by the provisions of § 30.245 of this subchapter relating to fraud and other unlawful or corrupt practices.

§ 35.936–18 Negotiation of subagreements.

(a) Formal advertising, with adequate purchase descriptions, sealed bids, and public openings shall be the required method of procurement unless negotiation under paragraph (b) of this section is necessary to accomplish sound procurement.

(b) All negotiated procurement shall be conducted in a manner to provide to the maximum practicable extent open and free competition appropriate to the type of project work to be performed. The grantee is authorized to negotiate subagreements in accordance with the applicable procedures of this subchapter (see §§ 35.937 *et seq.* and 35.500 *et seq.*) if any of the following conditions exist:

(1) Public exigency will not permit the delay incident to formally advertised procurement (e.g., an emergency procurement).

(2) The aggregate amount involved does not exceed $10,000 (see § 35.936–19 for small purchases).

(3) The material or service to be procured is available from only one person or entity. If the procurement is expected to aggregate more than $10,000, the grantee must document its file with a justification of the need for noncompetitive procurement, and provide such documentation to the project officer on request.

(4) The procurement is for personal or professional services (including architectural or engineering services) or for any service that a university or other educational institution may render.

(5) No responsive, responsible bids at acceptable price levels have been received after formal advertising, and, with respect to procurement under § 35.938–4, the Regional Administrator's prior written approval has been obtained.

(6) The procurement is for materials or services where the prices are established by law.

(7) The procurement is for technical items or equipment requiring standardization and interchangeability of parts with existing equipment.

(8) The procurement is for experimental, developmental or research services.

§ 35.936–19 Small purchases.

(a) A small purchase is the procurement of materials, supplies, and services when the aggregate amount involved in any one transaction does not exceed $10,000. The small purchase limitation of $10,000 applies to the aggregate total of an order, including all estimated handling and freight charges, overhead, and profit to be paid under the order. In arriving at the aggregate amount involved in any one transaction, all items which should properly be grouped together must be included. Reasonable competition shall be obtained.

(b) Subagreements for small purchases need not be in the form of a bilaterally executed written agreement. Where appropriate, unilateral purchase orders, sales slips, memoranda of oral price quotations, and the like may be used to minimize paperwork. Retention in the purchase files of these documents and of written quotations received, or references to catalogs or printed price lists used, will suffice as the record supporting the price paid.

§ 35.936–20 Allowable costs.

(a) Incurring costs under subagreements which are not awarded or administered in compliance with this part or part 33 of this subchapter, as appropriate, shall be cause for disallowance of those costs.

(b) Appropriate cost principles which apply to subagreements under EPA grants are identified in § 30.710 of this subchapter. Under that section, the contractor's actual costs, direct and indirect, eligible for Federal participation in a cost reimbursement contract shall be those allowable under the applicable provisions of 41 CFR 1–15.2 (Principles and Procedures for Use in Cost-Reimbursement Type Supply and Research Contracts With Commercial Organizations) and 41 CFR 1–15.4 (Construction and Architect-Engineer Contracts).

(c) Reasonable costs of compliance with the procurement and project management requirements of these regulations are allowable costs of administration under the grant. Costs of announcement, selection, negotiation, and cost review and analysis in connection with procurement of architectural or engineering services are allowable, even when conducted before award of the grant. Legal and engineering costs which a grantee is required to incur in a protest action under § 35.939 are allowable.

§ 35.936–21 Delegation to State agencies; certification of procurement systems.

(a) Under § 35.912 and subpart F of this part, the Regional Administrator may delegate authority to a State agency to review and certify the technical and administrative adequacy of procurement documentation required under these sections.

(b) If a State agency believes that State laws which govern municipal procurement include the same requirements or operate to provide the same protections as do §§ 35.936, 35.937 and

35.938, the State may request the Administrator to approve the State system instead of the procedures of these sections. EPA shall review the State system to determine its adequacy.

(c) If a State agency determines that an applicant's procurement ordinances or applicable statutes include the same requirements or operate to provide the same protections as do §§35.936, 35.937 and 35.938, the State may certify (accompanied by appropriate documentation) the adequacy of the municipality's ordinances and statutes and request the Administrator to approve the municipality's system instead of the procedures of these sections. EPA shall conduct or may request the State to conduct a review of the municipality's system to determine its adequacy.

§35.936–22 Bonding and insurance.

(a) On contracts for the building and erection of treatment works or contracts for sewer system rehabilitation exceeding $100,000, each bidder must furnish a bid guarantee equivalent to 5 percent of the bid price. In addition, the contractor awarded a construction contract for the building and erection of treatment works or sewer system rehabilitation must furnish performance and payment bonds, each of which shall be in an amount not less than 100 percent of the contract price. Construction contracts less than $100,000 shall be subject to State and local requirements for bid guarantees, performance bonds, and payment bonds. For contracts or subcontracts in excess of $100,000 the Regional Administrator may authorize the grantee to use its own bonding policies and requirements if he determines, in writing, that the Government's interest is adequately protected.

(b) Contractors should obtain such construction insurance (e.g., fire and extended coverage, workmen's compensation, public liability and property damage, and ''all risk'' builder's risk or installation floater coverage) as is required by State or local law or the grantee or as is customary and appropriate. Under the Flood Disaster Protection Act of 1973, a contractor must purchase flood insurance to cover his risk of loss if the grantee has not purchased the insurance (see §30.405–10 of this subchapter).

§35.937 Subagreements for architectural or engineering services.

(a) *Applicability.* Except as §35.937–2 otherwise provides, the provisions of §§35.937 through 35.937–11 apply to all subagreements of grantees for architectural or engineering services where the aggregate amount of services involved is expected to exceed $10,000. The provisions of §§35.937–2, 35.937–3, and 35.937–4 are not required, but may be followed, where the population of the grantee municipality is 25,000 or less according to the most recent U.S. census. When $10,000 or less of services (e.g., for consultant or consultant subcontract services) is required, the small purchase provisions of §35.936–19 apply.

(b) *Policy.* Step 1, step 2, or administration or management of step 3 project work may be performed by negotiated procurement of architectural or engineering services. The Federal Government's policy is to encourage public announcement of the requirements for personal and professional services, including engineering services. Subagreements for engineering services shall be negotiated with candidates selected on the basis of demonstrated competence and qualifications for the type of professional services required and at fair and reasonable prices. All negotiated procurement shall be conducted in a manner that provides to the maximum practicable extent, open and free competition. Nothing in this subpart shall be construed as requiring competitive bids or price competition in the procurement of architectural or engineering services.

(c) *Definitions.* As used in §§35.937 through 35.937–11 the following words and terms mean:

(1) *Architectural or engineering services.* Those professional services associated with research, development, design and construction, alteration, or repair of real property, as well as incidental services that members of these professions and those in their employ may logically or justifiably perform,

including studies, investigations, surveys, evaluations, consultations, planning, programing, conceptual designs, plans and specifications, cost estimates, inspections, shop drawing reviews, sample recommendations, preparation of operation and maintenance manuals, and other related services.

(2) *Engineer.* A professional firm or individual engaged to provide services as defined in paragraph (c)(1) of this section by subagreement under a grant.

§ 35.937–1 Type of contract (subagreement).

(a) *General.* Cost-plus-percentage-of-cost and percentage-of-construction-cost contracts are prohibited. Cost reimbursement, fixed price, or per diem contracts or combinations of these may be negotiated for architectural or engineering services. A fixed price contract is generally used only when the scope and extent of work to be performed is clearly defined. In most other cases, a cost reimbursement type of contract is more appropriate. A per diem contract may be used if no other type of contract is appropriate. An incentive fee may be used if the grantee submits an adequate independent cost estimate and price comparison under § 35.937–6.

(b) *Cost reimbursement contracts.* Each cost reimbursement contract must clearly establish a cost ceiling which the engineer may not exceed without formally amending the contract and a fixed dollar profit which may not be increased except in case of a contract amendment to increase the scope of work.

(c) *Fixed price contracts.* An acceptable fixed price contract is one which establishes a guaranteed maximum price which may not be increased unless a contract amendment increases the scope of work.

(d) *Compensation procedures.* If, under either a cost reimbursement or fixed price contract, the grantee desires to use a multiplier type of compensation, all of the following must apply:

(1) The multiplier and the portions of the multiplier allocable to overhead and allocable to profit have been specifically negotiated;

(2) The portion of the multiplier allocable to overhead includes only allowable items of cost under the cost principles of 41 CFR 1–15.2 and 1–15.4;

(3) The portions of the multiplier allocable to profit and allocable to overhead have been separately identified in the contract; and

(4) The fixed price contract includes a guaranteed maximum price for completion of the specifically defined scope of work; the cost reimbursement contract includes a fixed dollar profit which may not be increased except in case of a contract amendment which increases the scope of work.

(e) *Per diem contracts.* A per diem agreement expected to exceed $10,000 may be utilized only after a determination that a fixed price or cost reimbursement type contract is not appropriate. Per diem agreements should be used only to a limited extent, e.g., where the first task under a step 1 grant involves establishing the scope and cost of succeeding step 1 tasks, or for incidental services such as expert testimony or intermittent professional or testing services. (Resident engineer and resident inspection services should generally be compensated under paragraph (b) or (c) of this section.) Cost and profit included in the per diem rate must be specifically negotiated and displayed separately in the engineer's proposal. The contract must clearly establish a price ceiling which may not be exceeded without formally amending the contract.

§ 35.937–2 Public notice.

(a) *Requirement.* Adequate public notice as paragraph (a)(1) or (2) of this section provide, must be given of the requirement for architectural or engineering services for all subagreements with an anticipated price in excess of $25,000 except as paragraph (b) of this section provides. In providing public notice under paragraphs (a)(1) and (2) of this section, grantees must comply with the policies in §§ 35.936–2(c), 35.936–3, and 35.936–7.

(1) *Public announcement.* A notice of request for qualifications should be published in professional journals, newspapers, or publications of general circulation over a reasonable area and, in addition, if desired, through posted public notices or written notification directed to interested person, firms, or

professional organizations inviting the submission of statements of qualifications. The announcement must clearly state the deadline and place for submission of qualification statements.

(2) *Prequalified list.* As an alternative to publishing public notice as in paragraph (b) of this section, the grantee may secure or maintain a list of qualified candidates. The list must:

(i) Be developed with public notice procedures as in paragraph (a)(1) of this section;

(ii) Provide for continuous updating; and

(iii) Be maintained by the grantee or secured from the State or from a nearby political subdivision.

(b) *Exceptions.* The public notice requirement of this section and the related requirements of §§ 35.937–3 and 35.937–4 are not applicable, but may be followed, in the cases described in paragraphs (b)(1) through (3) of this section. All other appropriate provisions of this section, including cost review and negotiation of price, apply.

(1) Where the population of the grantee municipality is 25,000 or less according to the latest U.S. census.

(2) For step 2 or step 3 of a grant, if:

(i) The grantee is satisfied with the qualifications and performance of an engineer who performed all or any part of the step 1 or step 2 work;

(ii) The engineer has the capacity to perform the subsequent steps; and

(iii) The grantee desires the same engineer to provide architectural or engineering services for the subsequent steps.

(3) For subsequent segments of design work under one grant if:

(i) A single treatment works is segmented into two or more step 3 projects;

(ii) The step 2 work is accordingly segmented so that the initial contract for preparation of construction drawings and specifications does not cover the entire treatment works to be built under one grant; and

(iii) The grantee desires to use the same engineering firm that was selected for the initial segment of step 2 work for subsequent segments.

§ 35.937–3 Evaluation of qualifications.

(a) The grantee shall review the qualifications of firms which responded to the announcement or were on the prequalified list and shall uniformly evaluate the firms.

(b) Qualifications shall be evaluated through an objective process (e.g., the appointment of a board or committee which, to the extent practicable, should include persons with technical skills).

(c) Criteria which should be considered in the evaluation of candidates for submission of proposals should include:

(1) Specialized experience and technical competence of the candidate or firm and its personnel (including a joint venture, association or professional subcontract), considering the type of services required and the complexity of the project;

(2) Past record of performance on contracts with the grantee, other government agencies or public bodies, and with private industry, including such factors as control of costs, quality of work, and ability to meet schedules;

(3) The candidate's capacity to perform the work (including any specialized services) within the time limitations, considering the firm's current and planned workload;

(4) The candidate's familiarity with types of problems applicable to the project; and

(5) Avoidance of personal and organizational conflicts of interest prohibited under State and local law and § 35.936–16.

§ 35.937–4 Solicitation and evaluation of proposals.

(a) Requests for professional services proposals must be sent to no fewer than three candidates who either responded to the announcement or who were selected from the prequalified list. If, after good faith effort to solicit qualifications in accordance with § 35.937–2, fewer than three qualified candidates respond, all qualified candidates must be provided requests for proposals.

(b) Requests for professional services proposals must be in writing and must contain the information necessary to enable a prospective offeror to prepare a proposal properly. The request for

proposals must include the solicitation statement in § 35.937–9(a) and must inform offerors of the evaluation criteria, including all those in paragraph (c) of this section, and of the relative importance attached to each criterion (a numerical weighted formula need not be utilized).

(c) All proposals submitted in response to the request for professional services proposals must be uniformly evaluated. Evaluation criteria shall include, as a minimum, all criteria stated in § 35.937–3(c) of this subpart. The grantee shall also evaluate the candidate's proposed method to accomplish the work required, including, where appropriate, demonstrated capability to explore and develop innovative or advanced techniques and designs. The grantee's evaluation shall comply with § 35.936–7.

(d) Proposals shall be evaluated through an objective process (e.g., the appointment of a board or committee which, to the extent practicable, should include persons with technical skills. Oral (including telephone) or written interviews should be conducted with top rated proposers, and information derived therefrom shall be treated on a confidential basis, except as required to be disclosed under State or local law or to EPA under § 35.937–6.

(e) At no point during the procurement process shall information be conveyed to any candidate which would provide an unfair competitive advantage.

§ 35.937–5 Negotiation.

(a) Grantees are responsible for negotiation of their contracts for architectural or engineering services. Contract procurement including negotiation may be performed by the grantee directly or by another non-Federal governmental body, person or firm retained for the purpose. Contract negotiations may include the services of technical, legal, audit, or other specialists to the extent appropriate.

(b) Negotiations may be conducted in accordance with State or local requirements, as long as they meet the minimum requirements as set forth in this section. In the absence of State or local statutory or code requirements, negotiations may be conducted by the grantee under procedures it adopts based upon Public Law 92–582, 40 U.S.C. 541–544 (commonly known as the ''Brooks Bill'') or upon the negotiation procedures of 40 CFR 33.510–2.

(c) The object of negotiations with any candidate shall be to reach agreement on the provisions of the proposed contract. The grantee and the candidate shall discuss, as a minimum:

(1) The scope and extent of work and other essential requirements;

(2) Identification of the personnel and facilities necessary to accomplish the work within the required time, including where needed, employment of additional personnel, subcontracting, joint ventures, etc.;

(3) Provision of the required technical services in accordance with regulations and criteria established for the project; and

(4) A fair and reasonable price for the required work, to be determined in accordance with the cost and profit considerations set forth in §§ 35.937–6 and 35.937–7, and payment provisions.

§ 35.937–6 Cost and price considerations.

(a) *General.* EPA policy is that the cost or price of all subagreements and amendments to them must be considered. For each subagreement in excess of $10,000 but not greater than $100,000, grantees shall use the procedures described in paragraph (c) of this section, or an equivalent process.

(b) *Subagreements over $100,000.* For each subagreement expected to exceed $100,000, or for two subagreements which aggregate more than $100,000 awarded to an engineer for work on one step, or where renegotiation or amendment of a subagreement will result in a contract price in excess of $100,000, or where the amendment itself is in excess of $100,000, the provisions of this paragraph (b) shall apply.

(1) The candidate(s) selected for negotiation shall submit to the grantee for review sufficient cost and pricing data as described in paragraph (c) of this section to enable the grantee to ascertain the necessity and reasonableness of costs and amounts proposed, and the allowability and eligibility of costs proposed.

(2) The grantee shall submit to the EPA Project Officer for review (i) documentation of the public notice of need for architectural or engineering services, and selection procedures used, in those cases where §§ 35.937–2, 35.937–3 and 35.937–4 are applicable; (ii) the cost and pricing data the selected engineer submitted; (iii) a certification of review and acceptance of the selected engineer's cost or price; and (iv) a copy of the proposed subagreement. The EPA Project Officer will review the complete subagreement action and approve the grantee's compliance with appropriate procedures before the grantee awards the subagreement. The grantee shall be notified upon completion of review.

(c) *Cost review.* (1) The grantee shall review proposed subagreement costs.

(2) As a minimum, proposed subagreement costs shall be presented on EPA form 5700–41 on which the selected engineer shall certify that the proposed costs reflect complete, current, and accurate cost and pricing data applicable to the date of anticipated subagreement award.

(3) In addition to the specific elements of cost, the estimated amount of profit shall be set forth separately in the cost summary for fixed price contracts and a maximum total dollar amount of profit shall be set forth separately in the cost summary for cost reimbursement contracts.

(4) The grantee may require more detailed cost data than the form requires in order to substantiate the reasonableness of proposed subagreement costs. EPA normally requires more detailed documentation only when the selected engineer is unable to certify that the cost and pricing data used are complete, current, and accurate. EPA may, on a selected basis, perform a preaward cost analysis on any subagreement. Normally, a provisional overhead rate will be agreed upon before contract award.

(5) Appropriate consideration should be given to § 30.710 of this subchapter which contains general cost principles which must be used to determine the allowability of costs under grants. The engineer's actual costs, direct and indirect, allowable for Federal participation shall be determined in accordance with the terms and conditions of the subagreement, this subpart and the cost principles included in 41 CFR 1–15.2 and 1–15.4. Examples of cost which are not allowable under those cost principles include entertainment, interest on borrowed capital and bad debts.

(6) The engineer shall have an accounting system which accounts for costs in accordance with generally accepted accounting principles. This system shall provide for the identification, accumulation, and segregation of allowable and unallowable project costs among projects. Allowable project costs shall be determined in accordance with paragraph (c)(5) of this section. The engineer must propose and account for costs in a manner consistent with his normal accounting procedures.

(7) Subagreements awarded on the basis of review of a cost element summary and a certification of complete, current, and accurate cost and pricing data shall be subject to downward renegotiation or recoupment of funds where the Regional Administrator determines that such certification was not based on complete, current, and accurate cost and pricing data or not based on costs allowable under the appropriate FPR cost principles (41 CFR 1–15.2 and 1–15.4) at the time of award.

§ 35.937–7 Profit.

The objective of negotiations shall be the exercise of sound business judgment and good administrative practice including the determination of a fair and reasonable profit based on the firm's assumption of risk and input to total performance and not merely the application of a predetermined percentage factor. For the purpose of subagreements under EPA grants, profit is defined as the net proceeds obtained by deducting all allowable costs (direct and indirect) from the price. (Because this definition of profit is based on Federal procurement principles, it may vary from the firm's definition of profit for other purposes.) Profit on a subagreement and each amendment to a subagreement under a grant should be sufficient to attract engineers who possess talents and skills necessary to the accomplishment of project objectives,

and to stimulate efficient and expeditious completion of the project. Where cost review is performed, the grantee should review the estimate of profit as he reviews all other elements of price.

§ 35.937–8 Award of subagreement.

After the close of negotiations and after review and approval by the EPA Project Officer if required under § 35.937–6(b), the grantee may award the contract. Unsuccessful candidates should be notified promptly.

§ 35.937–9 Required solicitation and subagreement provisions.

(a) *Required solicitation statement.* Requests for qualifications or proposals must include the following statement, as well as the proposed terms of the subagreement.

Any contract awarded under this request for (qualifications/professional proposals) is expected to be funded in part by a grant from the United States Environmenal Protection Agency. This procurement will be subject to regulations contained in 40 CFR 35.936, 35.937, and 35.939. Neither the United States nor the United States Environmental Protection Agency is nor will be a party to this request for (qualifications/professional proposals) or any resulting contract.

(b) *Content of subagreement.* Each subagreement must adequately define:

(1) The scope and extent of project work;

(2) The time for performance and completion of the contract work, including where appropriate, dates for completion of significant project tasks;

(3) Personnel and facilities necessary to accomplish the work within the required time;

(4) The extent of subcontracting and consultant agreements; and

(5) Payment provisions in accordance with § 35.937–10.

If any of these elements cannot be defined adequately for later tasks or steps at the time of contract execution, the contract should not include the subsequent tasks or steps at that time.

(c) *Required subagreement provisions.* Each consulting engineering contract must include the provisions set forth in appendix C–1 to this subpart.

§ 35.937–10 Subagreement payments—architectural or engineering services.

The grantee shall make payment to the engineer in accordance with the payment schedule incorporated in the engineering agreement or in accordance with paragraph 7b of appendix C–1 to this subpart. Any retainage is at the option of the grantee. No payment request made by the Engineer under the agreement may exceed the estimated amount and value of the work and services performed.

§ 35.937–11 Applicability to existing contracts.

Some negotiated engineering subagreements already in existence may not comply with the requirements of §§ 35.936 and 35.937. Appendix D to this subpart contains EPA policy with respect to these subagreements and must be implemented before the grant award action for the next step under the grant.

§ 35.937–12 Subcontracts under subagreements for architectural or engineering services.

(a) Neither award and execution of subcontracts under a prime contract for architectural or engineering services, nor the procurement and negotiation procedures used by the engineer in awarding such subcontracts are required to comply with any of the provisions, selection procedures, policies or principles set forth in § 35.936 or § 35.937 except as provided in paragraphs (b), (c), and (d) of this section.

(b) The award or execution of subcontracts in excess of $10,000 under a prime contract for architectural or engineering services and the procurement procedures used by the engineer in awarding such subcontracts must comply with the following:

(1) Section 35.936–2 (Grantee procurement systems; State or local law);

(2) Section 35.936–7 (Small and minority business);

(3) Section 35.936–15 (Limitations on subagreement award);

(4) Section 35.936–17 (Fraud and other unlawful or corrupt practices);

(5) Section 35.937–6 (Cost and price considerations);

(6) Section 35.937–7 (Profit);

(7) Prohibition of percentage-of-construction-cost and cost-plus-percentage-of-cost contracts (see § 35.937–1); and

(8) Applicable subagreement clauses (see appendix C–1, clauses 9, 17, 18; note clause 10).

(c) The applicable provisions of this subpart shall apply to lower tier subagreements where an engineer acts as an agent for the grantee under a management subagreement (see § 35.936–5(b)).

(d) If an engineer procures items or services (other than architectural or engineering services) which are more appropriately procured by formal advertising or competitive negotiation procedures, the applicable procedures of § 35.938 or of part 33 shall be observed.

§ 35.938 Construction contracts (subagreements) of grantees.

§ 35.938–1 Applicability.

This section applies to construction contracts (subagreements) in excess of $10,000 awarded by grantees for any step 3 project.

§ 35.938–2 Performance by contract.

The project work shall be performed under one or more contracts awarded by the grantee to private firms, except for force account work authorized by § 35.936–14.

§ 35.938–3 Type of contract.

Each contract shall be a fixed price (lump sum or unit price or a combination of the two) contract, unless the Regional Administrator gives advance written approval for the grantee to use some other acceptable type of contract. The cost-plus-percentage-of-cost contract shall not be used in any event.

§ 35.938–4 Formal advertising.

Each contract shall be awarded after formal advertising, unless negotiation is permitted in accordance with § 35.936–18. Formal advertising shall be in accordance with the following:

(a) *Adequate public notice.* The grantee will cause adequate notice to be given of the solicitation by publication in newspapers or journals of general circulation beyond the grantee's locality (statewide, generally), inviting bids on the project work, and stating the method by which bidding documents may be obtained or examined. Where the estimated cost of step 3 construction is $10 million or more, the grantee must generally publish the notice in trade journals of nationwide distribution. The grantee should, in addition, solicit bids directly from bidders if it maintains a bidders list.

(b) *Adequate time for preparing bids.* Adequate time, generally not less than 30 days, must be allowed between the date when public notice under paragraph (a) of this section is first published and the date by which bids must be submitted. Bidding documents (including specifications and drawings) shall be available to prospective bidders from the date when such notice is first published.

(c) *Adequate bidding documents.* The grantee shall prepare a reasonable number of bidding documents (invitations for bids) and shall furnish them upon request on a first-come, first-served basis. The grantee shall maintain a complete set of bidding documents and shall make them available for inspection and copying by any party. The bidding documents shall include:

(1) A complete statement of the work to be performed, including necessary drawings and specifications, and the required completion schedule. (Drawings and specifications may be made available for inspection and purchase, instead of being furnished.);

(2) The terms and conditions of the contract to be awarded;

(3) A clear explanation of the method of bidding and the method of evaluation of bid prices, and the basis and method for award of the contract;

(4) Responsibility requirements or criteria which will be employed in evaluating bidders;

(5) The following statement:

Any contract or contracts awarded under this invitation for bids are expected to be funded in part by a grant from the U.S. Environmental Protection Agency. Neither the United States nor any of its departments, agencies or employees is or will be a party to this invitation for bids or any resulting contract. This procurement will be subject to regulations contained in 40 CFR 35.936, 35.938, and 35.939.;

and

(6) A copy of §§ 35.936, 35.938, and 35.939.

(d) *Sealed bids.* The grantee shall provide for bidding by sealed bid and for the safeguarding of bids received until public opening.

(e) *Addenda to bidding documents.* If a grantee desires to amend any part of the bidding documents (including drawings and specifications) during the period when bids are being prepared, the addenda shall be communicated in writing to all firms which have obtained bidding documents in time to be considered before the bid opening time.

(f) *Bid modifications.* A firm which has submitted a bid shall be allowed to modify or withdraw its bid before the time of bid opening.

(g) *Public opening of bids.* The grantee shall provide for a public opening of bids at the place, date and time announced in the bidding documents.

(h) *Award to the low, responsive, responsible bidder.* (1) After bids are opened, the grantee shall evaluate them in accordance with the methods and criteria set forth in the bidding documents.

(2) The grantee may reserve the right to reject all bids. Unless all bids are rejected for good cause, award shall be made to the low, responsive, responsible bidder.

(3) If the grantee intends to make the award to a firm which did not submit the lowest bid, he shall prepare a written statement before any award, explaining why each lower bidder was deemed nonresponsible or nonresponsive, and shall retain it in his files.

(4) State or local laws, ordinances, regulations or procedures which are designed or which operate to give local or in-State bidders preference over other bidders shall not be employed in evaluating bids.

(5) If an unresolved procurement review issue or a protest relates only to award of a subcontract or procurement of a subitem under the prime contract, and resolution of that issue or protest is unduly delaying performance of the prime contract, the Regional Administrator may authorize award and performance of the prime contract before resolution of the issue or protest, if the Regional Administrator determines that:

(i) Resolution of the protest—

(A) Will not affect the placement of the prime contract bidders; and

(B) Will not materially affect initial performance of the prime contract; and that

(ii) Award of the prime contract—

(A) Is in the Government's best interest;

(B) Will not materially affect resolution of the protest; and

(C) Is not barred by State law.

(6) The grantee shall not reject a bid as nonresponsive for failure to list or otherwise indicate the selection of a subcontractor(s) or equipment, unless the grantee has unambiguously stated in the solicitation documents that such failure to list shall render a bid nonresponsive and shall cause rejection of a bid.

§ 35.938–5 Negotiation of contract amendments (change orders).

(a) *Grantee responsibility.* Grantees are responsible for negotiation of construction contract change orders. This function may be performed by the grantee directly or, if authorized, by his engineer. During negotiations with the contractor the grantee shall:

(1) Make certain that the contractor has a clear understanding of the scope and extent of work and other essential requirements;

(2) Assure that the contractor demonstrates that he will make available or will obtain the necessary personnel, equipment and materials to accomplish the work within the required time; and

(3) Assure a fair and reasonable price for the required work.

(b) *Changes in contract price or time.* The contract price or time may be changed only by a change order. When negotiations are required, they shall be conducted in accordance with paragraph (c) or (d) of this section, as appropriate. The value of any work covered by a change order or of any claim for increase or decrease in the contract price shall be determined by the method set forth in paragraphs (b)(1) through (3) of this section which is most advantageous to the grantee.

(1) *Unit prices*—(i) *Original bid items.* Unit prices previously approved are acceptable for pricing changes of original bid items. However, when changes in quantities exceed 15 percent of the original bid quantity and the total dollar change of that bid item is significant, the grantee shall review the unit price to determine if a new unit price should be negotiated.

(ii) *New items.* Unit prices of new items shall be negotiated.

(2) A lump sum to be negotiated.

(3) *Cost reimbursement*—the actual cost for labor, direct overhead, materials, supplies, equipment, and other services necessary to complete the work plus an amount to be agreed upon to cover the cost of general overhead and profit to be negotiated.

(c) For each change order not in excess of $100,000 the contractor shall submit sufficient cost and pricing data to the grantee to enable the grantee to determine the necessity and reasonableness of costs and amounts proposed, and the allowability and eligibility of costs proposed.

(d) For each change order in excess of $100,000, the contractor shall submit to the grantee for review sufficient cost and pricing data as described in paragraphs (d) (1) through (6) of this section to enable the grantee to ascertain the necessity and reasonableness of costs and amounts proposed, and the allowability and eligibility of costs proposed.

(1) As a minimum, proposed change order costs shall be presented on EPA Form 5700–41 on which the contractor shall certify that proposed costs reflect complete, current, and accurate cost and pricing data applicable to the date of the change order.

(2) In addition to the specific elements of cost, the estimated amount of profit shall be set forth separately in the cost summary for fixed price change orders and a specific total dollar amount of profit will be set forth separately in the cost summary for cost reimbursement change orders.

(3) The grantee may require more detailed cost data than the form requires in order to substantiate the reasonableness of proposed change order costs. EPA normally requires more detailed documentation only when the contractor is unable to certify that proposed change order cost data are complete, current, and accurate. EPA may, on a selected basis, perform a detailed cost analysis on any change order.

(4) Appropriate consideration should be given to § 30.710 of this subchapter which contains general cost principles which must be used for the determination and allowability of costs under grants. The contractor's actual costs, direct and indirect, allowable for Federal participation shall be determined in accordance with the terms and conditions of the contract, this subpart and the cost principles included in 41 CFR 1–15.2 and 1–15.4. Examples of costs which are not allowable under those cost principles include, but are not limited to, entertainment, interest on borrowed capital and bad debts.

(5) For costs under cost reimbursement change orders, the contractor shall have an accounting system which accounts for such costs in accordance with generally accepted accounting principles. This system shall provide for the identification, accumulation and segregation of allowable and unallowable change orders. Allowable change order costs shall be determined in accordance with paragraph (d)(4) of this section. The contractor must propose and account for such costs in a manner consistent with his normal accounting procedures.

(6) Change orders awarded on the basis of review of a cost element summary and a certification of complete, current, and accurate cost and pricing data shall be subject to downward renegotiation or recoupment of funds where subsequent audit substantiates that such certification was not based on complete, current and accurate cost and pricing data and on costs allowable under the appropriate FPR cost principles (41 CFR 1–15.2 and 1–15.4) at the time of change order execution.

(e) *EPA review.* In addition to the requirements of §§ 35.935–10 (copies of contract documents) and 35.935–11 (project changes), the grantee shall submit, before the execution of any change order in excess of $100,000, to the EPA Project Officer for review:

(1) The cost and pricing data the contractor submitted;

(2) A certification of review and acceptance of the contractor's cost or price; and

(3) A copy of the proposed change order.

(f) *Profit*. The objective of negotiations shall be the exercise of sound business judgment and good administrative practice including the determination of a fair and reasonable profit based on the contractor's assumption of risk and input to total performance and not merely the application of a predetermined percentage factor. For the purpose of negotiated change orders to construction contracts under EPA grants, profit is defined as the net proceeds obtained by deducting all allowable costs (direct and indirect) from the price. The grantee should review the estimate or profit as he reviews all other elements of price.

(g) *Related work*. Related work shall not be split into two amendments or change orders merely to keep it under $100,000 and thereby avoid the requirements of paragraph (d) of this section. For change orders which include both additive and deductive items:

(1) If any single item (additive or deductive) exceeds $100,000, the requirements of paragraph (d) of this section shall be applicable.

(2) If no single additive or deductive item has a value of $100,000, but the total price of the change order is over $100,000, the requirements of paragraph (d) of this section shall be applicable.

(3) If the total of additive items of work in the change order exceeds $100,000, or the total of deductive items of work in the change order exceeds $100,000, and the net price of the change order is less than $100,000, the requirements of paragraph (d) of this section shall apply.

§ 35.938–6 Progress payments to contractors.

(a) *Policy*. EPA policy is that, except as State law otherwise provides, grantees should make prompt progress payments to prime contractors and prime contractors should make prompt progress payment to subcontractors and suppliers for eligible construction, material, and equipment costs, including those of undelivered specifically manufactured equipment, incurred under a contract under an EPA construction grant.

(b) *Conditions of progress payments.* For purposes of this section, progress payments are defined as follows:

(1) Payments for work in place.

(2) Payments for materials or equipment which have been delivered to the construction site, or which are stockpiled in the vicinity of the construction site, in accordance with the terms of the contract, when conditional or final acceptance is made by or for the grantee. The grantee shall assure that items for which progress payments have been made are adequately insured and are protected through appropriate security measures. Costs of such insurance and security are allowable costs in accordance with § 35.940.

(3) Payments for undelivered specifically manufactured items or equipment (excluding off-the-shelf or catalog items), as work on them progresses. Such payments must be made if provisions therefor are included in the bid and contract documents. Such provisions may be included at the option of the grantee only when all of the following conditions exist:

(i) The equipment is so designated in the project specifications;

(ii) The equipment to be specifically manufactured for the project could not be readily utilized on nor diverted to another job; and

(iii) A fabrication period of more than 6 months is anticipated.

(c) *Protection of progress payments made for specifically manufactured equipment*. The grantee will assure protection of the Federal interest in progress payments made for items or equipment referred to in paragraph (b)(3) of this section. This protection must be acceptable to the grantee and must take the form of:

(1) Securities negotiable without recourse, condition or restrictions, a progress payment bond, or an irrevocable letter of credit provided to the grantee through the prime contractor by the subcontractor or supplier; and,

(2) For items or equipment in excess of $200,000 in value which are manufactured in a jurisdiction in which the Uniform Commercial Code is applicable, the creation and perfection of a security interest under the Uniform

Commercial Code reasonably adequate to protect the interests of the grantee.

(d) *Limitations on progress payments for specifically manufactured equipment.* (1) Progress payments made for specifically manufactured equipment or items shall be limited to the following:

(i) A first payment upon submission by the prime contractor of shop drawings for the equipment or items in an amount not exceeding 15 percent of the contract or item price plus appropriate and allowable higher tier costs; and

(ii) Subsequent to the grantee's release or approval for manufacture, additional payments not more frequently than monthly thereafter up to 75 percent of the contract or item price plus appropriate and allowable higher tier costs. However, payment may also be made in accordance with the contract and grant terms and conditions for ancillary onsite work before delivery of the specifically manufactured equipment or items.

(2) In no case may progress payments for undelivered equipment or items under paragraph (d)(1)(i) or (d)(1)(ii) of this section be made in an amount greater than 75 percent of the cumulative incurred costs allocable to contract performance with respect to the equipment or items. Submission of a request for any such progress payments must be accompanied by a certification furnished by the fabricator of the equipment or item that the amount of progress payment claimed constitutes not more than 75 percent of cumulative incurred costs allocable to contract performance, and in addition, in the case of the first progress payment request, a certification that the amount claimed does not exceed 15 percent of the contract or item price quoted by the fabricator.

(3) As used in this section, the term ''costs allocable to contract performance'' with respect to undelivered equipment or items includes all expenses of contract performance which are reasonable, allocable to the contract, consistent with sound and generally accepted accounting principles and practices consistently applied, and which are not excluded by the contract.

(e) *Enforcement.* A subcontractor or supplier which is determined by the Regional Administrator to have frustrated the intent of the provisions regarding progress payments for major equipment or specifically manufactured equipment through intentional forfeiture of its bond or failure to deliver the equipment may be determined nonresponsible and ineligible for further work under EPA grants.

(f) *Contract provisions.* Where applicable, appropriate provisions regarding progress payments must be included in each contract and subcontract. Grantees must use clauses acceptable to the EPA Regional Administrator.

(g) *Implementation.* The foregoing progress payments policy should be implemented in invitations for bids under step 3 grants. If provision for progress payments is made after contract award, it must be for consideration that the grantee deems adequate.

§ 35.938–7 Retention from progress payments.

(a) The grantee may retain a portion of the amount otherwise due the contractor. Except as State law otherwise provides, the amount the grantee retains shall be limited to the following:

(1) Withholding of not more than 10 percent of the payment claimed until work is 50 percent complete;

(2) When work is 50 percent complete, reduction of the withholding to 5 percent of the dollar value of all work satisfactorily completed to date, provided that the contractor is making satisfactory progress and there is no specific cause for greater withholding;

(3) When the work is substantially complete (operational or beneficial occupancy), the withheld amount shall be further reduced below 5 percent to only that amount necessary to assure completion.

(4) The grantee may reinstate up to 10 percent withholding if the grantee determines, at its discretion, that the contractor is not making satisfactory progress or there is other specific cause for such withholding.

(5) The grantee may accept securities negotiable without recourse, condition or restrictions, a release of retainage bond, or an irrevocable letter of credit provided by the contractor instead of all or part of the cash retainage.

(b) The foregoing retention policy shall be implemented with respect to all step 3 projects for which plans and specifications are approved after March 1, 1976. Appropriate provision to assure compliance with this policy must be included in the bid documents for such projects initially or by addendum before the bid submission date, and as a special condition in the grant agreement or in a grant amendment. For all previous active projects, the grantee may implement the foregoing policy through contract amendment upon written request to the grantee by the contractor upon consideration that the grantee deems adequate.

(c) Under § 30.620–3 of this subchapter, a grantee who delays disbursement of grant funds will be required to credit to the United States all interest earned on those funds.

§ 35.938–8 Required construction contract provisions.

Each construction contract must include the ''Supplemental General Conditions'' set forth in Appendix C–2 to this subpart.

§ 35.938–9 Subcontracts under construction contracts.

(a) The award or execution of subcontracts by a prime contractor under a construction contract awarded to the prime contractor by the grantee, and the procurement and negotiation procedures used by prime contractors in awarding or executing subcontracts are not required to comply with any of the provisions, selection procedures, policies or principles set forth in § 35.936 or § 35.938 except those specifically stated in this section. In addition, the bid protest procedures of § 35.939 are not available to parties executing subcontracts with prime contractors except as specifically provided in that section.

(b) The award or execution of subcontracts by a prime contractor under a formally advertised, competitively bid, fixed price construction contract awarded to the prime contractor by the grantee, and the procurement and negotiation procedures used by such prime contractors in awarding or executing such subcontracts must comply with the following:

(1) Section 35.936–2 (Grantee procurement systems; State or local law);

(2) Section 35.936–7 (Small and minority business);

(3) Section 35.936–13 (Specifications);

(4) Section 35.936–15 (Limitations on subagreement award);

(5) Section 35.936–17 (Fraud and other unlawful or corrupt practices);

(6) Section 35.938–5(d) (Negotiation of contract amendments); and

(7) Applicable subagreement clauses (see Appendix C–2, clauses 8, 10, 14, 15, 16; note clause 11).

(c) The award of subcontracts under construction contracts not described above in paragraph (b) of this section and the procurement and negotiation procedures of prime contractors on contracts not meeting that description must comply with paragraphs (b)(1) through (4) of this section as well as the principles of § 35.938–5.

§ 35.939 Protests.

(a) *General.* A protest based upon an alleged violation of the procurement requirements of §§ 35.936 through 35.938–9 of this subpart may be filed against a grantee's procurement action by a party with an adversely affected direct financial interest. Any such protest must be received by the grantee within the time period in paragraph (b)(1) of this section. The grantee is responsible for resolution of the protest before the taking of the protested action, in accordance with paragraph (d) of this section, except as otherwise provided by paragraph (j) or (k) or § 35.938–4(h)(5). The Regional Administrator will review grantee protest determinations in accordance with paragraph (e) of this section, if a timely request for such review is filed under paragraph (b)(2) of this section. In the case of protests which he determines are untimely, frivolous, or without merit, the Regional Administrator may take such actions as are described in paragraphs (f)(7), (i)(2), and (k) of this section.

(b) *Time limitations.* (1) A protest under paragraph (d) of this section should be made as early as possible during the procurement process (for example, immediately after issuance of a solicitation for bids) to avoid disruption of or unnecessary delay to the procurement process. A protest authorized

by paragraph (d) of this section must be received by the grantee within 1 week after the basis for the protest is known or should have been known, whichever is earlier (generally, for formally advertised procurement, after bid opening, within 1 week after the basis for the protest is, or should have been, known).

(i) However, in the case of an alleged violation of the specification requirements of § 35.936–13 (e.g., that a product fails to qualify as an ''or equal'') or other specification requirements of this subpart, a protest need not be filed prior to the opening of bids. But the grantee may resolve the issue before receipt of bids or proposals through a written or other formal determination, after notice and opportunity to comment is afforded to any party with a direct financial interest.

(ii) In addition, where an alleged violation of the specification requirements of § 35.936–13 or other requirements of this subpart first arises subsequent to the receipt of bids or proposals, the grantee must decide the protest if the protest was received by the grantee within 1 week of the time that the grantee's written or other formal notice is first received.

(2) A protest appeal authorized by paragraph (e) of this section must be received by the Regional Administrator within 1 week after the complainant has received the grantee's determination.

(3) If a protest is mailed, the complaining party bears the risk of nondelivery within the required time period. It is suggested that all documents transmitted in accordance with this section be mailed by certified mail (return receipt requested) or otherwise delivered in a manner which will objectively establish the date of receipt. Initiation of protest actions under paragraph (d) or (e) of this section may be made by brief telegraphic notice accompanied by prompt mailing or other delivery of a more detailed statement of the basis for the protest. Telephonic protests will not be considered.

(c) *Other initial requirements.* (1) The initial protest document must briefly state the basis for the protest, and should—

(i) Refer to the specific section(s) of this subpart which allegedly prohibit the procurement action;

(ii) Specifically request a determination pursuant to this section;

(iii) Identify the specific procurement document(s) or portion(s) of them in issue; and

(iv) Include the name, telephone number, and address of the person representing the protesting party.

(2) The party filing the protest must concurrently transmit a copy of the initial protest document and any attached documentation to all other parties with a direct financial interest which may be adversely affected by the determination of the protest (generally, all bidders or proposers who appear to have a substantial and reasonable prospect of receiving an award if the protest is denied or sustained) and to the appropriate EPA Regional Administrator.

(d) *Grantee determination.* (1) The grantee is responsible for the initial resolution of protests based upon alleged violations of the procurement requirements of this subpart.

(2) When the grantee receives a timely written protest, he must defer the protested procurement action (see paragraph (h) of this section) and:

(i) Afford the complaining party and interested parties an opportunity to present arguments in support of their views in writing or at a conference or other suitable meeting (such as a city council meeting),

(ii) Inform the complainant and other interested parties of the procedures which the grantee will observe for resolution of the protest;

(iii) Obtain an appropriate extension of the period for acceptance of the bid and bid bond(s) of each interested party, where applicable; failure to agree to a suitable extension of such bid and bid bond(s) by the party which initiated the protest shall be cause for summary dismissal of the protest by the grantee or the Regional Administrator; and

(iv) Promptly deliver (preferably by certified mail, return receipt requested, or by personal delivery) its written determination of the protest to the complaining party and to each other participating party.

(3) The grantee's determination must be accompanied by a legal opinion addressing issues arising under State, territorial, or local law (if any) and, where step 3 construction is involved, by an engineering report, if appropriate.

(4) The grantee should decide the protest as promptly as possible—generally within 3 weeks after receipt of a protest, unless extenuating circumstances require a longer period of time for proper resolution of the protest.

(e) *Regional Administrator review.* (1) A party with a direct financial interest adversely affected by a grantee determination made under paragraph (d) with respect to a procurement requirement of this subpart may submit a written request to the Regional Administrator for his review of such determination. Any such request must be in writing, must adequately state the basis for the protest (including reference to the specific section(s) of this subpart alleged to prohibit the procurement action), and must be received by the Regional Administrator within 1 week after the complaining party has received the grantee's determination of the protest. A copy of the grantee's determination and other documentation in support of the request for review shall be transmitted with the request.

(2) The Regional Counsel or his delegee will afford both the grantee and the complaining party, as well as any other party with a financial interest which may be adversely affected by determination of the protest, an opportunity to present arguments in support of their views in writing or at a conference at a time and place convenient to the parties as determined by the Regional Counsel or his delegee, and he shall thereafter promptly submit in writing his report and recommendations (or recommended determination) concerning the protest to the Regional Administrator.

(3) Any such conference should be held within not more than 10 days after receipt of the request for review and the report should be transmitted to the Regional Administrator within 10 days after the date set for receipt of the participants' written materials or for the conference. The Regional Administrator should transmit his determination of the protest with an adequate explanation thereof to the grantee and simultaneously to each participating party within 1 week after receipt of the report and recommendations. His determination shall constitute final agency action, from which there shall be no further administrative appeal. The Regional Counsel may extend these time limitations, where appropriate.

(4) The Regional Administrator may review the record considered by the grantee, and any other documents or arguments presented by the parties, to determine whether the grantee has complied with this subpart and has a rational basis for its determination.

(5) If a determination is made by the Regional Administrator which is favorable to the complainant, the grantee's procurement action (for example, contract award) must be taken in accordance with such determination.

(f) *Procedures.* (1) Where resolution of an issue properly raised with respect to a procurement requirement of this subpart requires prior or collateral resolution of a legal issue arising under State or local law, and such law is not clearly established in published legal decisions of the State or other relevant jurisdiction, the grantee or Regional Administrator may rely upon:

(i) An opinion of the grantee's legal counsel adequately addressing the issue (see § 35.936–2(b));

(ii) The established or consistent practice of the grantee, to the extent appropriate; or

(iii) The law of other States or local jurisdictions as established in published legal decisions; or

(iv) If none of the foregoing adequately resolve the issue, published decisions of the Comptroller General of the United States (U.S. General Accounting Office) or of the Federal courts addressing Federal requirements comparable to procurement requirements of this subpart.

(2) For the determination of Federal issues presented by the protest, the Regional Administrator may rely upon:

(i) Determinations of other protests decided under this section, unless such protests have been reversed; and

(ii) Decisions of the Comptroller General of the United States or of the Federal courts addressing Federal requirements comparable to procurement requirements of this subpart.

(3) The Regional Counsel may establish additional procedural requirements or deadlines for the submission of materials by parties or for the accomplishment of other procedures. Where time limitations are established by this section or by the Regional Counsel, participants must seek to accomplish the required action as promptly as possible in the interest of expediting the procurement action.

(4) A party who submits a document subsequent to initiation of a protest proceeding under paragraph (d) or (e) of this section must simultaneously furnish each other party with a copy of such document.

(5) The procedures established by this section are not intended to preclude informal resolution or voluntary withdrawal of protests. A complainant may withdraw its appeal at any time, and the protest proceeding shall thereupon be terminated.

(6) The Regional Administrator may utilize appropriate provisions of this section in the discharge of his responsibility to review grantee procurement under 40 CFR 35.935–2.

(7) A protest may be dismissed for failure to comply with procedural requirements of this section.

(g) *Burden of proof.* (1) In proceedings under paragraphs (d) and (e) of this section, if the grantee proposes to award a formally advertised, competitively bid, fixed price contract to a party who has submitted the apparent lowest price, the party initiating the protest will bear the burden of proof in the protest proceedings.

(2) In the proceedings under paragraph (e) of this section—

(i) If the grantee proposes to award a formally advertised, competitively bid, fixed-price contract to a bidder other than the bidder which submitted the apparent lowest price, the grantee will bear the burden of proving that its determination concerning responsiveness is in accordance with this subchapter; and

(ii) If the basis for the grantee's determination is a finding of nonresponsibility, the grantee must establish and substantiate the basis for its determination and must adequately establish that such determination has been made in good faith.

(h) *Deferral of procurement action.* Upon receipt of a protest under paragraph (d) of this section, the grantee must defer the protested procurement action (for example, defer the issuance of solicitations, contract award, or issuance of notice to proceed under a contract) until 10 days after delivery of its determination to the participating parties. (The grantee may receive or open bids at it own risk, if it considers this to be in its best interest; and see § 35.938–4(h)(5).) Where the Regional Administrator has received a written protest under paragraph (e) of this section, he must notify the grantee promptly to defer its protested procurement action until notified of the formal or informal resolution of the protest.

(i) *Enforcement.* (1) Noncompliance with the procurement provisions of this subchapter by the grantee shall be cause for enforcement action in accordance with one or more of the provisions of § 35.965 of this subpart.

(2) If the Regional Administrator determines that a protest prosecuted pursuant to this section is frivolous, he may determine the party which prosecuted such protest to be nonresponsible and ineligible for future contract award (see also paragraph (k) of this section).

(j) *Limitation.* A protest may not be filed under this section with respect to the following:

(1) Issues not arising under the procurement provisions of this subchapter; or

(2) Issues relating to the selection of a consulting engineer, provided that a protest may be filed only with respect to the mandatory procedural requirements of §§ 35.937 through 35.937–9;

(3) Issues primarily determined by State or local law or ordinances and as to which the Regional Administrator, upon review, determines that there is no contravening Federal requirement and that the grantee's action has a rational basis (see paragraph (e)(4) of this section).

(4) Provisions of Federal regulations applicable to direct Federal contracts,

unless such provisions are explicitly referred to or incorporated in this subpart;

(5) Basic project design determinations (for example, the selection of incineration versus other methods of disposal of sludge);

(6) Award of subcontracts or issuance of purchase orders under a formally advertised, competitively bid, lump-sum construction contract. However, protest may be made with respect to alleged violation of the following:

(i) Specification requirements of § 35.936–13; or

(ii) Provisions of this subpart applicable to the procurement procedures, negotiation or award of subcontracts or issuance of purchase orders under §§ 35.937–12 (subcontracts under subagreements for architectural or engineering services) or § 35.938–9 (subcontracts under construction contracts).

(k) *Summary disposition.* The Regional Administrator may summarily dismiss a protest, without proceedings under paragraph (d) or (e) of this section, if he determines that the protest is untimely, frivolous or without merit—for example, that the protested action of the grantee primarily involves issues of State or local law. Any such determination shall refer briefly to the facts substantiating the basis for the determination.

(l) *Index.* The EPA General Counsel will publish periodically as a notice document in the FEDERAL REGISTER an index of Regional Administrator protest determinations. (See, e.g., 43 FR 29085, July 5, 1978.)

§ 35.940 Determination of allowable costs.

The grantee will be paid, upon request in accordance with § 35.945, for the Federal share of all necessary costs within the scope of the approved project and determined to be allowable in accordance with § 30.705 of this chapter, this subpart, and the grant agreement.

§ 35.940–1 Allowable project costs.

Allowable costs include:

(a) Costs of salaries, benefits, and expendable material the grantee incurs for the project, except as provided in § 35.940–2(g);

(b) Costs under construction contracts;

(c) Professional and consultant services;

(d) Facilities planning directly related to the treatment works;

(e) Sewer system evaluation (§ 35.927);

(f) Project feasibility and engineering reports;

(g) Costs required under the Uniform Relocation Assistance and Real Property Acquisition Policies Act of 1970 (42 U.S.C. 4621 *et seq.*, 4651 *et seq.*), and part 4 of this chapter;

(h) Costs of complying with the National Environmental Policy Act, including costs of public notices and hearings;

(i) Preparation of construction drawings, specifications, estimates, and construction contract documents;

(j) Landscaping;

(k) Removal and relocation or replacement of utilities, for which the grantee is legally obligated to pay;

(l) Materials acquired, consumed, or expended specifically for the project;

(m) A reasonable inventory of laboratory chemicals and supplies necessary to initiate plant operations;

(n) Development and preparation of an operation and maintenance manual;

(o) A plan of operation, in accordance with guidance issued by the Administrator;

(p) Start-up services for new treatment works, in accordance with guidance issued by the Administrator;

(q) Project identification signs (§ 30.625–3 of this chapter);

(r) Development of a municipal pretreatment program approvable under part 403 of this chapter, and purchase of monitoring equipment and construction of facilities to be used by the municipal treatment works in the pretreatment program;

(s) Costs of complying with the procurement requirements of these regulations (see § 35.936–20).

(t) Reasonable costs of public participation incurred by grantees which are identified in a public participation work plan, or which are otherwise approved by EPA, shall be allowable.

[43 FR 44049, Sept. 27, 1978, as amended at 44 FR 10304, Feb. 16, 1979]

§ 35.940–2 Unallowable costs.

Costs which are not necessary for the construction of a treatment works project are unallowable. Such costs include, but are not limited to:

(a) Basin or areawide planning not directly related to the project;

(b) Bonus payments not legally required for completion of construction before a contractual completion date;

(c) Personal injury compensation or damages arising out of the project, whether determined by adjudication, arbitration, negotiation, or otherwise;

(d) Fines and penalties due to violations of, or failure to comply with, Federal, State, or local laws;

(e) Costs outside the scope of the approved project;

(f) Interest on bonds or any other form of indebtedness required to finance the project costs;

(g) Ordinary operating expenses of local government, such as salaries and expenses of a mayor, city council members, or city attorney, except as provided in § 35.940–4;

(h) Site acquisition (for example, sewer rights-of-way, sewage treatment plantsite, sanitary landfills and sludge disposal areas) except as otherwise provided in § 35.940–3(a);

(i) Costs for which payment has been or will be received under another Federal assistance program;

(j) Costs of equipment or material procured in violation of § 35.938–4(h);

(k) Costs of studies under § 35.907 (d)(6) and (7) when performed solely for the purpose of seeking an allowance for removal of pollutants under part 403 of this chapter;

(l) Costs of monitoring equipment used by industry for sampling and analysis of industrial discharges to municipal treatment works;

(m) Construction of privately-owned treatment works, including pretreatment facilities, except as authorized by section 201(h) of the Act and § 35.918;

(n) Preparation of a grant application, including a plan of study.

§ 35.940–3 Costs allowable, if approved.

Certain direct costs are sometimes necessary for the construction of a treatment works. The following costs are allowable if reasonable and if the Regional Administrator approves them in the grant agreement.

(a) Land acquired after October 17, 1972, that will be an integral part of the treatment process, or that will be used for ultimate disposal of residues resulting from such treatment (for example, land for spray irrigation of sewage effluent).

(b) Land acquired after December 26, 1977, that will be used for storage of treated wastewater in land treatment systems before land application.

(c) Land acquired after December 26, 1977, that will be used for composting or temporary storage of compost residues which result from wastewater treatment, if EPA has approved a program for use of the compost.

(d) Acquisition of an operable portion of a treatment works. This type of acquisition is generally not allowable except when determined by the Regional Administrator in accordance with guidance issued by the Administrator.

(e) Rate determination studies required under § 35.925–11.

(f) A limited amount of end-of-pipe sampling and associated analysis of industrial discharges to municipal treatment works as provided in § 35.907(f).

§ 35.940–4 Indirect costs.

Indirect costs shall be allowable in accordance with an indirect cost agreement negotiated and incorporated in the grant agreement. An indirect cost agreement must identify those cost elements allowable under § 35.940–1. Where the benefits derived from indirect services cannot be readily determined, a lump sum for overhead may be negotiated if EPA determines that this amount will be approximately the same as the actual indirect costs.

§ 35.940–5 Disputes concerning allowable costs.

The grantee should seek to resolve any questions relating to cost allowability or allocation at its earliest opportunity (if possible, before execution of the grant agreement). Final determinations concerning the allowability of costs shall be conclusive unless appealed within 30 days in accordance with the ''Disputes'' provisions of part 30, subpart J, of this subchapter.

§ 35.945 Grant payments.

The grantee shall be paid the Federal share of allowable project costs incurred within the scope of an approved project and which are currently due and payable from the grantee (i.e., not including withheld or deferred amounts), subject to the limitations of §§ 35.925–18, 35.930–5, 35.930–6, and 35.965 (b) and (c), up to the grant amount set forth in the grant agreement and any amendments thereto. Payments for engineering services for step 1, 2 or 3 shall be made in accordance with § 35.937–10 and payments for step 3 construction contracts shall be made in accordance with §§ 35.938–6 and 35.938–7. All allowable costs incurred before initiation of construction of the project must be claimed in the application for grant assistance for that project before the award of the assistance or no subsequent payment will be made for the costs.

(a) *Initial request for payment.* Upon award of grant assistance, the grantee may request payment for the unpaid Federal share of actual or estimated allowable project costs incurred before grant award subject to the limitations of § 35.925–18. Payment for such costs shall be made in accordance with the negotiated payment schedule included in the grant agreement.

(b) *Interim requests for payment.* The grantee may submit requests for payments for allowable costs in accordance with the negotiated payment schedule included in the grant agreement. Upon receipt of a request for payment, subject to the limitations set forth in § 30.615–3 of this subchapter and §§ 35.935–12, 35.935–13, and 35.935–16, the Regional Administrator shall cause to be disbursed from available appropriated funds such amounts as are necessary so that the total amount of Federal payments to the grantee for the project is equal to the Federal share of the actual or estimated allowable project costs incurred to date, as certified by the grantee in its most recent request for payment. Generally, payments will be made within 20 days after receipt of a request for payment.

(c) *Adjustment.* At any time before final payment under the grant, the Regional Administrator may cause any request(s) for payment to be reviewed or audited. Based on such review or audit, any payment may be reduced for prior overpayment or increased for prior underpayment.

(d) *Refunds, rebates, credits, etc.* The Federal share of any refunds, rebates, credits, or other amounts (including any interest) that accrue to or are received by the grantee for the project, and that are properly allocable to costs for which the grantee has been paid under a grant, must be credited to the current State allotment or paid to the United States. Reasonable expenses incurred by the grantee for the purpose of securing such refunds, rebates, credits, or other amounts shall be allowable under the grant when approved by the Regional Administrator.

(e) *Final payment.* After completion of final inspection under § 35.935–14, approval of the request for payment which the grantee designates as the ''final payment request,'' and the grantee's compliance with all applicable requirements of this subchapter and the grant agreement, the Regional Administrator shall pay to the grantee any balance of the Federal share of allowable project costs which has not already been paid. The grantee must submit the final payment request promptly after final inspection.

(f) *Assignment and release.* By its acceptance of final payment, the grantee agrees to assign to the United States the Federal share of refunds, rebates, credits or other amounts (including any interest) properly allocable to costs for which the grantee has been paid by the Government under the grant. The grantee thereby also releases and discharges the United States, its officers, agents, and employees from all liabilities, obligations, and claims arising out of the project work or under the grant, subject only to exceptions previously specified in writing between the Regional Administrator and the grantee.

(g) *Payment of costs incurred under the Uniform Relocation Assistance and Real Property Acquisition Policies Act.* Notwithstanding the provisions of paragraph (a) of this section, if the Regional Administrator determines it is necessary for the expeditious completion of a project, he may make advance payment after grant award under

§4.502(c) of this subchapter for the EPA share of the cost of any payment of relocation assistance by the grantee. The requirements in §30.615–1 (b) and (d) of this subchapter apply to any advances of funds for assistance payments.

[43 FR 44049, Sept. 27, 1978, as amended at 44 FR 39340, July 5, 1979]

§35.950 Suspension, termination or annulment of grants.

Grants may be suspended under §30.915, or terminated or annulled under §30.920. The State agency shall be concurrently notified in writing of any such action.

§35.955 Grant amendments to increase grant amounts.

Grant agreements may be amended under §30.900–1 of this chapter for project changes which have been approved under §§30.900 and 35.935–11 of this subchapter. However, no grant agreement may be amended to increase the amount of a grant unless the State agency has approved the grant increase from available State allotments and reallotments under §35.915.

§35.960 Disputes.

(a) The Regional Administrator's final determination on the ineligibility of a project (see §35.915(h)) or a grant applicant (see §35.920–1), on the Federal share (see §35.930–5(b)), or on any dispute arising under a grant shall be final and conclusive unless the applicant or grantee appeals within 30 days from the date of receipt of the final determination. (See subpart J of part 30 of this subchapter.)

(b) The EPA General Counsel will publish periodically as a Notice document in the FEDERAL REGISTER a digest of grant appeals decisions.

§35.965 Enforcement.

If the Regional Administrator determines that the grantee has failed to comply with any provision of this subpart, he may impose any of the following sanctions:

(a) The grant may be terminated or annulled under §30.920 of this subchapter;

(b) Project costs directly related to the noncompliance may be disallowed;

(c) Payment otherwise due to the grantee of up to 10 percent may be withheld (see §30.615–3 of this chapter);

(d) Project work may be suspended under §30.915 of this subchapter;

(e) A noncomplying grantee may be found nonresponsible or ineligible for future Federal assistance or a noncomplying contractor may be found nonresponsible or ineligible for approval for future contract award under EPA grants;

(f) An injunction may be entered or other equitable relief afforded by a court of appropriate jurisdiction;

(g) Such other administrative or judicial action may be instituted if it is legally available and appropriate.

§35.970 Contract enforcement.

(a) *Regional Administrator authority.* At the request of a grantee, the Regional Administrator is authorized to provide technical and legal assistance in the administration and enforcement of any contract related to treatment works for which an EPA grant was made and to intervene in any civil action involving the enforcement of such contracts, including contract disputes which are the subject of either arbitration or court action. Any assistance is to be provided at the discretion of the Regional Administrator and in a manner determined to best serve the public interest. Factors which the Regional Administrator may consider in determining whether to provide assistance are:

(1) Available agency resources.

(2) Planned or ongoing enforcement action.

(3) The grantee's demonstration of good faith to resolve contract matters at issue.

(4) The grantee's adequate documentation.

(5) The Federal interest in the contract matters at issue.

(b) *Grantee request.* The grantee's request for technical or legal assistance should be submitted in writing and be accompained by documentation adequate to inform the Regional Administrator of the nature and necessity of the requested assistance. A grantee may orally request assistance from the Regional Administrator on an emergency basis.

(c) *Privity of contract.* The Regional Administrator's technical or legal involvement in any contract dispute will not make EPA a party to any contract entered into by the grantee. (See §35.936–8.)

(d) *Delegation to States.* The authority to provide technical and legal assistance in the administration of contract matters described in this section may be delegated to a State agency under subpart F of this part if the State agency can demonstrate that it has the appropriate legal authority to undertake such functions.

APPENDIX A—COST-EFFECTIVENESS ANALYSIS GUIDELINES

1. *Purpose.* These guidelines represent Agency policies and procedures for determining the most cost-effective waste treatment management system or component part.

2. *Authority.* These guidelines are provided under sections 212(2)(C) and 217 of the Clean Water Act.

3. *Applicability.* These guidelines, except as otherwise noted, apply to all facilities planning under step 1 grant assistance awarded after September 30, 1978. The guidelines also apply to State or locally financed facilities planning on which subsequent step 2 or step 3 Federal grant assistance is based.

4. *Definitions.* Terms used in these guidelines are defined as follows:

a. *Waste treatment management system.* Used synonymously with ''complete waste treatment system'' as defined in §35.905 of this subpart.

b. *Cost-effectiveness analysis.* An analysis performed to determine which waste treatment management system or component part will result in the minimum total resources costs over time to meet Federal, State, or local requirements.

c. *Planning period.* The period over which a waste treatment management system is evaluated for cost-effectiveness. The planning period begins with the system's initial operation.

d. *Useful life.* The estimated period of time during which a treatment works or a component of a waste treatment management system will be operated.

e. *Disaggregation.* The process or result of breaking down a sum total of population or economic activity for a State or other jurisdiction (i.e., designated 208 area or SMSA) into smaller areas or jurisdictions.

5. *Identification, selection, and screening of alternatives.* a. *Identification of alternatives.* All feasible alternative waste management systems shall be initially identified. These alternatives should include systems discharging to receiving waters, land application systems, on-site and other non-centralized systems, including revenue generating applications, and systems employing the reuse of wastewater and recycyling of pollutants. In identifying alternatives, the applicant shall consider the possibility of no action and staged development of the system.

b. *Screening of alternatives.* The identified alternatives shall be systematically screened to determine those capable of meeting the applicable Federal, State and local criteria.

c. *Selection of alternatives.* The identified alternatives shall be initially analyzed to determine which systems have cost-effective potential and which should be fully evaluated according to the cost-effectiveness analysis procedures established in the guidelines.

d. *Extent of effort.* The extent of effort and the level of sophistication used in the cost-effectiveness analysis should reflect the project's size and importance. Where processes or techniques are claimed to be innovative technology on the basis of the cost reduction criterion contained in paragraph 6e(1) of appendix E to this subpart, a sufficiently detailed cost analysis shall be included to substantiate the claim to the satisfaction of the Regional Administrator.

6. *Cost-effectiveness analysis procedures.*

a. *Method of analysis.* The resources costs shall be determined by evaluating opportunity costs. For resources that can be expressed in monetary terms, the analysis will use the interest (discount) rate established in paragraph 6e. Monetary costs shall be calculated in terms of present worth values or equivalent annual values over the planning period defined in section 6b. The analysis shall descriptively present nonmonetary factors (e.g., social and environmental) in order to determine their significance and impact. Nonmonetary factors include primary and secondary environmental effects, implementation capability, operability, performance reliability and flexibility. Although such factors as use and recovery of energy and scarce resources and recycling of nutrients are to be included in the monetary cost analysis, the non-monetary evaluation shall also include them. The most cost-effective alternative shall be the waste treatment management system which the analysis determines to have the lowest present worth or equivalent annual value unless nonmonetary costs are overriding. The most cost-effective alternative must also meet the minimum requirements of applicable effluent limitations, groundwater protection, or other applicable standards established under the Act.

b. *Planning period.* The planning period for the cost-effectiveness analysis shall be 20 years.

c. *Elements of monetary costs.* The monetary costs to be considered shall include the total value of the resources which are attributable to the waste treatment management system

or to one of its component parts. To determine these values, all monies necessary for capital construction costs and operation and maintenance costs shall be identified.

(1) Capital construction costs used in a cost-effective analysis shall include all contractors' costs of construction including overhead and profit, costs of land, relocation, and right-of-way and easement acquisition; costs of design engineering, field exploration and engineering services during construction; costs of administrative and legal services including costs of bond sales; start-up costs such as operator training; and interest during construction. Capital construction costs shall also include contingency allowances consistent with the cost estimate's level of precision and detail.

(2) The cost-effectiveness analysis shall include annual costs for operation and maintenance (including routine replacement of equipment and equipment parts). These costs shall be adequate to ensure effective and dependable operation during the system's planning period. Annual costs shall be divided between fixed annual costs and costs which would depend on the annual quantity of waste water collected and treated. Annual revenues generated by the waste treatment management system through energy recovery, crop production, or other outputs shall be deducted from the annual costs for operation and maintenance in accordance with guidance issued by the Administrator.

d. *Prices.* The applicant shall calculate the various components of costs on the basis of market prices prevailing at the time of the cost-effectiveness analysis. The analysis shall not allow for inflation of wages and prices, except those for land, as described in paragraph 6h(1) and for natural gas. This stipulation is based on the implied assumption that prices, other than the exceptions, for resources involved in treatment works construction and operation, will tend to change over time by approximately the same percentage. Changes in the general level of prices will not affect the results of the cost-effectiveness analysis. Natural gas prices shall be escalated at a compound rate of 4 percent annually over the planning period, unless the Regional Administrator determines that the grantee has justified use of a greater or lesser percentage based upon regional differentials between historical natural gas price escalation and construction cost escalation. Land prices shall be appreciated as provided in paragraph 6h(1). Both historical data and future projections support the gas and land price escalations relative to those for other goods and services related to waste water treatment. Price escalation rates may be updated periodically in accordance with Agency guidelines.

e. *Interest (discount) rate.* The rate which the Water Resources Council establishes annually for evaluation of water resource projects shall be used.

f. *Interest during construction.* (1) Where capital expenditures can be expected to be fairly uniform during the construction period, interest during construction may be calculated at $I=1/2PCi$ where:

I=the interest accrued during the construction period,
P=the construction period in years,
C=the total capital expenditures,
i=the interest rate (discount rate in section 6e).

(2) Where expenditures will not be uniform, or when the construction period will be greater than 4 years, interest during construction shall be calculated on a year-by-year basis.

g. *Useful life.* (1) The treatment works' useful life for a cost-effectiveness analysis shall be as follows:

Land—permanent.
Waste water conveyance structures (includes collection systems, outfall pipes, interceptors, force mains, tunnels, etc.)—50 years.
Other structures (includes plant building, concrete process tankage, basins, lift stations structures, etc.)—30–50 years.
Process equipment—15–20 years.
Auxiliary equipment—10–15 years.

(2) Other useful life periods will be acceptable when sufficient justification can be provided. Where a system or a component is for interim service, the anticipated useful life shall be reduced to the period for interim service.

h. *Salvage value.* (1) Land purchased for treatment works, including land used as part of the treatment process or for ultimate disposal of residues, may be assumed to have a salvage value at the end of the planning period at least equal to its prevailing market value at the time of the analysis. In calculating the salvage value of land, the land value shall be appreciated at a compound rate of 3 percent annually over the planning period, unless the Regional Administrator determines that the grantee has justified the use of a greater or lesser percentage based upon historical differences between local land cost escalation and construction cost escalation. The land cost escalation rate may be updated periodically in accordance with Agency guidelines. Right-of-way easements shall be considered to have a salvage value not greater than the prevailing market value at the time of the analysis.

(2) Structures will be assumed to have a salvage value if there is a use for them at the end of the planning period. In this case, salvage value shall be estimated using straight line depreciation during the useful life of the treatment works.

(3) The method used in paragraph 6h(2) may be used to estimate salvage value at the end of the planning period for phased additions of process equipment and auxiliary equipment.

(4) When the anticipated useful life of a facility is less than 20 years (for analysis of interim facilities), salvage value can be claimed for equipment if it can be clearly demonstrated that a specific market or reuse opportunity will exist.

7. *Innovative and alternative wastewater treatment processes and techniques.*

a. Beginning October 1, 1978, the capital costs of publicly owned treatment works which use processes and techniques meeting the criteria of appendix E to this subpart and which have only a water pollution control function, may be eligible if the present worth cost of the treatment works is not more than 115 percent of the present worth cost of the most cost-effective pollution control system, exclusive of collection sewers and interceptors common to the two systems being compared, by 115 percent, except for the following situation.

b. Where innovative or alternative unit processes would serve in lieu of conventional unit processes in a conventional waste water treatment plant, and the present worth costs of the nonconventional unit processes are less than 50 percent of the present worth costs of the treatment plant, multiply the present worth costs of the replaced conventional processes by 115 percent, and add the cost of nonreplaced unit processes.

c. The eligibility of multipurpose projects which combine a water pollution control function with another function, and which use processes and techniques meeting the criteria of appendix E to this subpart, shall be determined in accordance with guidance issued by the Administrator.

d. The above provisions exclude individual systems under §35.918. The regional Administrator may allow a grantee to apply the 15-percent preference authorized by this section to facility plans prepared under step 1 grant assistance awarded before October 1, 1978.

8. *Cost-effective staging and sizing of treatment works.*

a. *Population projections.* (1) The disaggregation of State projections of population shall be the basis for the population forecasts presented in individual facility plans, except as noted. These State projections shall be those developed in 1977 by the Bureau of Economic Analysis (BEA), Department of Commerce, unless, as of June 26, 1978, the State has already prepared projections. These State projections may be used instead of the BEA projections if the year 2000 State population does not exceed that of the BEA projection by more than 5 percent. If the difference exceeds this amount, the State must either justify or lower its projection. Justification must be based on the historical and current trends (e.g., energy and industrial development, military base openings) not taken into account in the BEA projections. The State must submit for approval to the Administrator the request and justification for use of State projections higher than the BEA projections. By that time, the State shall issue a public notice of the request. Before the Administrator's approval of the State projection, the Regional Administrator shall solicit public comments and hold a public hearing if important issues are raised about the State projection's validity. State projections and disaggregations may be updated periodically in accordance with Agency guidelines.

(2) Each State, working with designated 208 planning agencies, organizations certified by the Governor under section 174(a) of the Clean Air Act, as amended, and other regional planning agencies in the State's nondesignated areas, shall disaggregate the State population projection among its designated 208 areas, other standard metropolitan statistical areas (SMSA's) not included in the 208 area, and non-SMSA counties or other appropriate jurisdictions. States that had enacted laws, as of June 26, 1978, mandating disaggregation of State population totals to each county for areawide 208 planning may retain this requirement. When disaggregating the State population total, the State shall take into account the projected population and economic activities identified in facility plans, areawide 208 plans and municipal master plans. The sum of the disaggregated projections shall not exceed the State projection. Where a designated 208 area has, as of June 26, 1978, already prepared a population projection, it may be used if the year 2000 population does not exceed that of the disaggregated projection by more than 10 percent. The State may then increase its population projection to include all such variances rather than lower the population projection totals for the other areas. If the 208 area population forecast exceeds the 10 percent allowance, the 208 agency must lower its projection within the allowance and submit the revised projection for approval to the State and the Regional Administrator.

(3) The State projection totals and the disaggregations will be submitted as an output of the statewide water quality management process. The submission shall include a list of designated 208 areas, all SMSA's, and counties or other units outside the 208 areas. For each unit the disaggregated population shall be shown for the years 1980, 1990, and 2000. Each State will submit its projection totals and disaggregations for the Regional Administrator's approval before October 1, 1979. Before this submission, the State shall hold a public meeting on the disaggregations

and shall provide public notice of the meeting consistent with part 25 of this chapter. (See §35.917(e).)

(4) When the State projection totals and disaggregations are approved they shall be used thereafter for areawide water quality management planning as well as for facility planning and the needs surveys under section 516(b) of the Act. Within areawide 208 planning areas, the designated agencies, in consultation with the States, shall disaggregate the 208 area projections among the SMSA and non-SMSA areas and then disaggregate these SMSA and non-SMSA projections among the facility planning areas and the remaining areas. For those SMSA's not included within designated 208 planning areas, each State, with assistance from appropriate regional planning agencies, shall disaggregate the SMSA projection among the facility planning areas and the remaining areas within the SMSA. The State shall check the facility planning area forecasts to ensure reasonableness and consistency with the SMSA projections.

(5) For non-SMSA facility planning areas not included in designated areawide 208 areas, the State may disaggregate population projections for non-SMSA counties among facility planning areas and remaining areas. Otherwise, the grantee is to forecast future population growth for the facility planning area by linear extrapolation of the recent past (1960 to present) population trends for the planning area, use of correlations of planning area growth with population growth for the township, county or other larger parent area population, or another appropriate method. A population forecast may be raised above that indicated by the extension of past trends where likely impacts (e.g., significant new energy developments, large new industries, Federal installations, or institutions) justify the difference. The facilities plan must document the justification. These population forecasts should be based on estimates of new employment to be generated. The State shall check individual population forecasts to insure consistency with overall projections for non-SMSA counties and justification for any difference from past trends.

(6) Facilities plans prepared under step 1 grant assistance awarded later than 6 months after Agency approval of the State disaggregations shall follow population forecasts developed in accordance with these guidelines.

b. *Wastewater flow estimates.* (1) In determining total average daily flow for the design of treatment works, the flows to be considered include the average daily base flows (ADBF) expected from residential sources, commercial sources, institutional sources, and industries the works will serve plus allowances for future industries and nonexcessive infiltration/inflow. The amount of nonexcessive infiltration/inflow not included in the base flow estimates presented herein, is to be determined according to the Agency guidance for sewer system evaluation or Agency policy on treatment and control of combined sewer overflows (PRM 75–34).

(2) The estimation of existing and future ADBF, exclusive of flow reduction from combined residential, commercial and institutional sources, shall be based upon one of the following methods:

(a) *Preferred method.* Existing ADBF is estimated based upon a fully documented analysis of water use records adjusted for consumption and losses or on records of wastewater flows for extended dry periods less estimated dry weather infiltration. Future flows for the treatment works design should be estimated by determining the existing per capita flows based on existing sewered resident population and multiplying this figure by the future projected population to be served. Seasonal population can be converted to equivalent full time residents using the following multipliers:

Day-use visitor	0.1–0.2
Seasonal visitor	0.5–0.8

The preferred method shall be used wherever water supply records or wastewater flow data exist. Allowances for future increases of per capita flow over time will not be approved.

(b) *Optional method.* Where water supply and wastewater flow data are lacking, existing and future ADBF shall be estimated by multiplying a gallon per capita per day (gpcd) allowance not exceeding those in the following table, except as noted below, by the estimated total of the existing and future resident populations to be served. The tabulated ADBF allowances, based upon several studies of municipal water use, include estimates for commercial and institutional sources as well as residential sources. The Regional Administrator may approve exceptions to the tabulated allowances where large (more than 25 percent of total estimated ADBF) commercial and institutional flows are documented.

Description	Gallons per capita per day
Non-SMSA cities and towns with projected total 10-year populations of 5,000 or less	60–70
Other cities and towns	65–80

c. *Flow reduction.* The cost-effectiveness analysis for each facility planning area shall include an evaluation of the costs, cost savings, and effects of flow reduction measures unless the existing ADBF from the area is less than 70 gpcd, or the current population of the applicant municipality is under 10,000, or the Regional Administrator exempts the

area for having an effective existing flow reduction program. Flow reduction measures include public education, pricing and regulatory approaches or a combination of these. In preparing the facilities plan and included cost effectiveness analysis, the grantee shall, as a minimum:

(1) Estimate the flow reductions implementable and cost effective when the treatment works become operational and after 10 and 20 years of operation. The measures to be evaluated shall include a public information program; pricing and regulatory approaches; installation of water meters, and retrofit of toilet dams and low-flow showerheads for existing homes and other habitations; and specific changes in local ordinances, building codes or plumbing codes requiring installations of water saving devices such as water meters, water conserving toilets, showerheads, lavatory faucets, and appliances in new homes, motels, hotels, institutions, and other establishments.

(2) Estimate the costs of the proposed flow reduction measures over the 20-year planning period, including costs of public information, administration, retrofit of existing buildings and the incremental costs, if any, of installing water conserving devices in new homes and establishments.

(3) Estimate the energy reductions; total cost savings for wastewater treatment, water supply and energy use; and the net cost savings (total savings minus total costs) attributable to the proposed flow reduction measures over the planning period. The estimated cost savings shall reflect reduced sizes of proposed wastewater treatment works plus reduced costs of future water supply facility expansions.

(4) Develop and provide for implementing a recommended flow reduction program. This shall include a public information program highlighting effective flow reduction measures, their costs, and the savings of water and costs for a typical household and for the community. In addition, the recommended program shall comprise those flow reduction measures which are cost effective, supported by the public and within the implementation authority of the grantee or another entity willing to cooperate with the grantee.

(5) Take into account in the design of the treatment works the flow reduction estimated for the recommended program.

d. *Industrial flows.* (1) The treatment works' total design flow capacity may include allowances for industrial flows. The allowances may include capacity needed for industrial flows which the existing treatment works presently serves. However, these flows shall be carefully reviewed and means of reducing them shall be considered. Letters of intent to the grantee are required to document capacity needs for existing flows from significant industrial users and for future flows from all industries intending to increase their flows or relocate in the area. Requirements for letters of intent from significant industrial dischargers are set forth in §35.925–11(c).

(2) While many uncertainties accompany forecasting future industrial flows, there is still a need to allow for some unplanned future industrial growth. Thus, the cost-effective (grant eligible) design capacity and flow of the treatment works may include (in addition to the existing industrial flows and future industrial flows documented by letters of intent) a nominal flow allowance for future nonidentifiable industries or for unplanned industrial expansions, provided that 208 plans, land use plans and zoning provide for such industrial growth. This additional allowance for future unplanned industrial flow shall not exceed 5 percent (or 10 percent for towns with less than 10,000 population) of the total design flow of the treatment works exclusive of the allowance or 25 percent of the total industrial flow (existing plus documented future), whichever is greater.

e. *Staging of treatment plants.* (1) The capacity of treatment plants (i.e., new plants, upgraded plants, or expanded plants) to be funded under the construction grants program shall not exceed that necessary for wastewater flows projected during an initial staging period determined by one of the following methods:

(a) *First method.* The grantee shall analyze at least three alternative staging periods (10 years, 15 years, and 20 years). He shall select the least costly (i.e., total present worth or average annual cost) staging period.

(b) *Second method.* The staging period shall not exceed the period which is appropriate according to the following table.

STAGING PERIODS FOR TREATMENT PLANTS

Flow growth factors (20 years)[1]	Staging period[2] (years)
Less than 1.3	20
1.3 to 1.8	15
Greater than 1.8	10

[1] Ratio of wastewater flow expected at end of 20 year planning period to initial flow at the time the plant is expected to become operational.

[2] Maximum initial staging period.

(2) A municipality may stage the construction of a treatment plant for a shorter period than the maximum allowed under this policy. A shorter staging period might be based upon environmental factors (secondary impacts, compliance with other environmental laws under §35.925–14, energy conservation, water supply), an objective concerning planned modular construction, the utilization of temporary treatment plants, or attainment of consistency with locally adopted plans including comprehensive and capital

improvement plans. However, the staging period in no case may be less than 10 years, because of associated cost penalties and the time necessary to plan, apply for and receive funding, and construct later stages.

(3) The facilities plan shall present the design parameters for the proposed treatment plant. Whenever the proposed treatment plant components' size or capacity would exceed the minimum reliability requirements suggested in the EPA technical bulletin, ''Design Criteria for Mechanical, Electric, and Fluid System and Component Reliability,'' a complete justification, including supporting data, shall be provided to the Regional Administrator for his approval.

f. *Staging of interceptors.* Since the location and length of interceptors will influence growth, interceptor routes and staging of construction shall be planned carefully. They shall be consistent with approved 208 plans, growth management plans and other environmental laws under §35.925–14 and shall also be consistent with Executive orders for flood plains and wetlands.

(1) Interceptors may be allowable for construction grant funding if they eliminate existing point source discharges and accommodate flows from existing habitations that violate an enforceable requirement of the Act. Unless necessary to meet those objectives, interceptors should not be extended into environmentally sensitive areas, prime agricultural lands and other undeveloped areas (density less than one household per 2 acres). Where extension of an interceptor through such areas would be necessary to interconnect two or more communities, the grantee shall reassess the need for the interceptor by further consideration of alternative wastewater treatment systems. If the reassessment demonstrates a need for the interceptor, the grantee shall evaluate the interceptor's primary and secondary environmental impacts, and provide for appropriate mitigating measures such as rerouting the pipe to minimize adverse impacts or restricting future connections to the pipe. Appropriate and effective grant conditions (e.g., restricting sewer hookups) should be used where necessary to protect environmentally sensitive areas or prime agricultural lands from new development. NPDES permits shall include the conditions to insure implementation of the mitigating measures when new permits are issued to the affected treatment facilities in those cases where the measures are required to protect the treatment facilities against overloading.

(2) Interceptor pipe sizes (diameters for cylindrical pipes) allowable for construction grant funding shall be based on a staging period of 20 years. A larger pipe size corresponding to a longer staging period not to exceed 40 years may be allowed if the grantee can demonstrate, wherever water quality management plans or other plans developed for compliance with laws under §35.925–14 have been approved, that the larger pipe would be consistent with projected land use patterns in such plans and that the larger pipe would reduce overall (primary plus secondary) environmental impacts. These environmental impacts include:

(a) *Primary impacts.* (i) Short-term disruption of traffic, business and other daily activities.

(ii) Destruction of flora and fauna, noise, erosion, and sedimentation.

(b) *Secondary impacts.* (i) Pressure to rezone or otherwise facilitate unplanned development.

(ii) Pressure to accelerate growth for quicker recovery of the non-Federal share of the interceptor investments.

(iii) Effects on air quality and environmentally sensitive areas by cultural changes.

(3) The estimation of peak flows in interceptors shall be based upon the following considerations:

(a) Daily and seasonal variations of pipe flows, the timing of flows from the various parts of the tributary area, and pipe storage effects.

(b) The feasibility of off-pipe storage to reduce peak flows.

(c) The use of an appropriate peak flow factor that decreases as the average daily flow to be conveyed increases.

9. *State guidelines.* If a State has developed or chooses to develop comprehensive guidelines on cost-effective sizing and staging of treatment works, the Regional Administrator may approve all or portions of the State guidance for application to step 1 facility plans. Approved State guidance may be used instead of corresponding portions of these guidelines, if the following conditions are met:

a. The State guidance must be at least as stringent as the provisions of these guidelines.

b. The State must have held at least one public hearing on proposed State guidance, under regulations in part 25 of this chapter, before submitting the guidance for Agency approval.

10. *Additional capacity beyond the cost-effective capacity.* Treatment works which propose to include additional capacity beyond the cost-effective capacity determined in accordance with these guidelines may receive Federal grant assistance if the following requirements are met:

a. The facilities plan shall determine the most cost-effective treatment works and its associated capacity in accordance with these guidelines. The facilities plan shall also determine the actual characteristics and total capacity of the treatment works to be built.

b. Only a portion of the cost of the entire proposed treatment works including the additional capacity shall be eligible for Federal

funding. The portion of the cost of construction which shall be eligible for Federal funding under sections 203(a) and 202(a) of the Act shall be equivalent to the estimated construction costs of the most cost-effective treatment works. For the eligibility determination, the costs of construction of the actual treatment works and the most cost-effective treatment works must be estimated on a consistent basis. Up-to-date cost curves published by EPA's Office of Water Program Operations or other cost estimating guidance shall be used to determine the cost ratios between cost-effective project components and those of the actual project. These cost ratios shall be multiplied by the step 2 cost and step 3 contract costs of actual components to determine the eligible step 2 and step 3 costs.

c. The actual treatment works to be built shall be assessed. It must be determined that the actual treatment works meets the requirements of the National Environmental Policy Act and all applicable laws, regulations, and guidance, as required of all treatment works by §§35.925–8 and 35.925–14. Particular attention should be given to assessing the project's potential secondary environmental effects and to ensuring that air quality standards will not be violated. The actual treatment works' discharge must not cause violations of water quality standards.

d. The Regional Administrator shall approve the plans, specifications, and estimates for the actual treatment works under section 203(a) of the Act, even though EPA will be funding only a portion of its designed capacity.

e. The grantee shall satisfactorily assure the Agency that the funds for the construction costs due to the addtional capacity beyond the cost-effective treatment works' capacity as determined by EPA (i.e., the ineligible portion of the treatment works), as well as the local share of the grant eligible portion of the construction costs will be available.

f. The grantee shall execute appropriate grant conditions or releases providing that the Federal Government is protected from any further claim by the grantee, the State, or any other party for any of the costs of construction due to the additional capacity.

g. Industrial cost recovery shall be based upon the portion of the Federal grant allocable to the treatment of industrial wastes.

h. The grantee must implement a user charge system which applies to the entire service area of the grantee, including any area served by the additional capacity.

APPENDIX B—FEDERAL GUIDELINES—USER CHARGES FOR OPERATION AND MAINTENANCE OF PUBLICLY OWNED TREATMENT WORKS

(a) *Purpose.* To set forth advisory information concerning user charges based on actual use pursuant to section 204 of the Clean Water Act, hereinafter referred to as the Act. Applicable requirements are set forth in subpart E (40 CFR part 35).

(b) *Authority.* The authority for establishment of the user charge guidelines is contained in section 204(b)(2) of the Act.

(c) *Background.* Section 204(b)(1) of the Act provides that after March 1, 1973, Federal grant applicants shall be awarded grants only after the Regional Administrator has determined that the applicant has adopted or will adopt a system of charges to assure that each recipient of waste treatment services will pay its proportionate share of the costs of operation and maintenance, including replacement. The intent of the Act with respect to user charges is to distribute the cost of operation and maintenance of publicly owned treatment works to the pollutant source and to promote self-sufficiency of treatment works with respect to operation and maintenance costs. The 1977 Amendments amended section 204(b) to allow grantees to establish user charge systems based on ad valorem taxes. This appendix does not apply to ad valorem user charge systems.

(d) *Definitions*—(1) *Replacement.* Expenditures for obtaining and installing equipment, accessories, or appurtenances which are necessary to maintain the capacity and performance during the service life of the treatment works for which such works were designed and constructed. The term ''operation and maintenance'' includes replacement.

(2) *User charge.* A charge levied on users of treatment works for the cost of operation and maintenance of such works.

(e) *Classes of users.* At least two basic types of user charge systems are common. The first is to charge each user a share of the treatment works operation and maintenance costs based on his estimate of measured proportional contribution to the total treatment works loading. The second system establishes classes for users having similar flows and waste water characteristics; i.e., levels of biochemical oxygen demand, suspended solids, etc. Each class is then assigned its share of the waste treatment works operation and maintenance costs based on the proportional contribution of the class to the total treatment works loading. Either system is in compliance with these guidelines.

(f) *Criteria against which to determine the adequacy of user charges.* The user charge system shall be approved by the Regional Administrator and shall be maintained by the grantee in accordance with the following requirements:

(1) The user charge system must result in the distribution of the cost of operation and maintenance of treatment works within the grantee's jurisdiction to each user (or user class) in proportion to such user's contribution to the total wastewater loading of the

treatment works. Factors such as strength, volume, and delivery flow rate characteristics shall be considered and included as the basis for the user's contribution to ensure a proportional distribution of operation and maintenance costs to each user (or user class).

(2) For the first year of operation, operation and maintenance costs shall be based upon past experience for existing treatment works or some other rational method that can be demonstrated to be applicable.

(3) The grantee shall review user charges annually and revise them periodically to reflect actual treatment works operation and maintenance costs.

(4) The user charge system must generate sufficient revenue to offset the cost of all treatment works operation and maintenance provided by the grantee.

(5) The user charge system must be incorporated in one or more municipal legislative enactments or other appropriate authority. If the project is a regional treatment works accepting wastewaters from treatment works owned by others, then the subscribers receiving waste treatment services from the grantee shall have adopted user charge systems in accordance with these guidelines. Such user charge systems shall also be incorporated in the appropriate municipal legislative enactments or other appropriate authority.

(g) *Model user charge systems.* The user charge system adopted by the applicant must result in the distribution of treatment works operation and maintenance costs to each user (or user class) in approximate proportion to his contribution to the total wastewater loading of the treatment works. The following user charge models can be used for this purpose; however, the applicant is not limited to their use. The symbols used in the models are as defined below:

C_T=Total operation and maintenance (O. & M.) costs per unit of time.
C_u=A user's charge for O. & M. per unit of time.
C_s=A surcharge for wastewaters of excessive strength.
V_c=O&M cost for transportation and treatment of a unit of wastewater volume.
V_u=Volume contribution from a user per unit of time.
V_T=Total volume contribution from all users per unit of time.
B_c=O&M cost for treatment of a unit of biochemical oxygen demand (BOD).
B_u=Total BOD contribution from a user per unit of time.
B_T=Total BOD contribution from all users per unit of time.
B=Concentration of BOD from a user above a base level.
S_c=O&M cost for treatment of a unit of suspended solids.
S_u=Total suspended solids contribution from a user per unit of time.
S=Concentration of SS from a user above a base level.
P_c=O&M cost for treatment of a unit of any pollutant.
P_u=Total contribution of any pollutant from a user per unit of time.
P_T=Total contribution of any pollutant from all users per unit of time.
P=Concentration of any pollutant from a user above a base level.

(1) *Model No. 1.* If the treatment works is primarily flow dependent or if the BOD, suspended solids, and other pollutant concentrations discharged by all users are approximately equal, then user charges can be developed on a volume basis in accordance with the model below:

$$C_u=C_T/V_T(V_u)$$

(2) *Model No. 2.*—When BOD, suspended solids, or other pollutant concentrations from a user exceed the range of concentration of these pollutants in normal domestic sewage, a surcharge added to a base charge, calculated by means of Model No. 1, can be levied. The surcharge can be computed by the model below:

$$C_s=[B_c(B)+S_c(S)+P_c(P)]V_u$$

(3) *Model No. 3.*—This model is commonly called the ''quantity/quality formula'':

$$C_u=V_cV_u+B_cB_u+S_cS_u+P_cP_u$$

(h) *Other considerations.*—(1) Quantity discounts to large volume users will not be acceptable. Savings resulting from economies of scale should be apportioned to all users or user classes.

(2) User charges may be established based on a percentage of the charge for water usage only in cases where the water charge is based on a constant cost per unit of consumption.

[39 FR 5270, Feb. 11, 1974]

APPENDIX C–1—REQUIRED PROVISIONS—CONSULTING ENGINEERING AGREEMENTS

1. General
2. Responsibility of the Engineer
3. Scope of Work
4. Changes
5. Termination
6. Remedies
7. Payment
8. Project Design
9. Audit; Access to Records
10. Price Reduction for Defective Cost or Pricing Data
11. Subcontracts
12. Labor Standards
13. Equal Employment Opportunity
14. Utilization of Small or Minority Business
15. Covenant Against Contingent Fees

16. Gratuities
17. Patents
18. Copyrights and Rights in Data

1. GENERAL

(a) The owner and the engineer agree that the following provisions apply to the EPA grant-eligible work to be performed under this agreement and that such provisions supersede any conflicting provisions of this agreement.

(b) The work under this agreement is funded in part by a grant from the U.S. Environmental Protection Agency. Neither the United States nor the U.S. Environmental Protection Agency (hereinafter, ''EPA'') is a party to this agreement. This agreement which covers grant-eligible work is subject to regulations contained in 40 CFR 35.936, 35.937, and 35.939 in effect on the date of execution of this agreement. As used in these clauses, the words ''the date of execution of this agreement'' mean the date of execution of this agreement and any subsequent modification of the terms, compensation or scope of services pertinent to unperformed work.

(c) The owner's rights and remedies provided in these clauses are in addition to any other rights and remedies provided by law or this agreement.

2. RESPONSIBILITY OF THE ENGINEER

(a) The engineer shall be responsible for the professional quality, technical accuracy, timely completion, and the coordination of all designs, drawings, specifications, reports, and other services furnished by the engineer under this agreement. The engineer shall, without additional compensation, correct or revise any errors, omissions, or other deficiencies in his designs, drawings, specifications, reports, and other services.

(b) The engineer shall perform such professional services as may be necessary to accomplish the work required to be performed under this agreement, in accordance with this agreement and applicable EPA requirements in effect on the date of execution of this agreement.

(c) The owner's or EPA's approval of drawings, designs, specifications, reports, and incidental engineering work or materials furnished hereunder shall not in any way relieve the engineer of responsibility for the technical adequacy of his work. Neither the owner's nor EPA's review, approval or acceptance of, nor payment for, any of the services shall be construed to operate as a waiver of any rights under this agreement or of any cause of action arising out of the performance of this agreement.

(d) The engineer shall be and shall remain liable, in accordance with applicable law, for all damages to the owner or EPA caused by the engineer's negligent performance of any of the services furnished under this agreement, except for errors, omissions or other deficiencies to the extent attributable to the owner, owner-furnished data or any third party. The engineer shall not be responsible for any time delays in the project caused by circumstances beyond the engineeer's control. Where innovative processes or techniques (see 40 CFR 35.908) are recommended by the engineer and are used, the engineer shall be liable only for gross negligence to the extent of such use.

3. SCOPE OF WORK

The services to be performed by the engineer shall include all services required to complete the task or Step in accordance with applicable EPA regulations (40 CFR part 35, subpart E in effect on the date of execution of this agreement) to the extent of the scope of work as defined and set out in the engineering services agreement to which these provisions are attached.

4. CHANGES

(a) The owner may, at any time, by written order, make changes within the general scope of this agreement in the services or work to be performed. If such changes cause an increase or decrease in the engineer's cost of, or time required for, performance of any services under this agreement, whether or not changed by any order, an equitable adjustment shall be made and this agreement shall be modified in writing accordingly. The engineer must assert any claim for adjustment under this clause in writing within 30 days from the date of receipt by the engineer of the notification of change, unless the owner grants a further period of time before the date of final payment under this agreement.

(b) No services for which an additional compensation will be charged by the engineer shall be furnished without the written authorization of the owner.

(c) In the event that there is a modification of EPA requirements relating to the services to be performed under this agreement after the date of execution of this agreement, the increased or decreased cost of performance of the services provided for in this agreement shall be reflected in an appropriate modification of this agreement.

5. TERMINATION

(a) Either party may terminate this agreement, in whole or in part, in writing, if the other party substantially fails to fulfill its obligations under this agreement through no fault of the terminating party. However, no such termination may be affected unless the other party is given (1) not less than ten (10) calendar days written notice (delivered by certified mail, return receipt requested) of intent to terminate and (2) an opportunity

for consultation with the terminating party before termination.

(b) The owner may terminate this agreement, in whole or in part, in writing, for its convenience, if the termination is for good cause (such as for legal or financial reasons, major changes in the work or program requirements, initiation of a new step) and the engineer is given (1) not less than ten (10) calendar days written notice (delivered by certified mail, return receipt requested) of intent to terminate, and (2) an opportunity for consultation with the terminating party before termination.

(c) If the owner terminates for default, an equitable adjustment in the price provided for in this agreement shall be made, but (1) no amount shall be allowed for anticipated profit on unperformed services or other work, and (2) any payment due to the engineer at the time of termination may be adjusted to the extent of any additional costs the owner incurs because of the engineer's default. If the engineer terminates for default or if the owner terminates for convenience, the equitable adjustment shall include a reasonable profit for services or other work performed. The equitable adjustment for any termination shall provide for payment to the engineer for services rendered and expenses incurred before the termination, in addition to termination settlement costs the engineer reasonably incurs relating to commitments which had become firm before the termination.

(d) Upon receipt of a termination action under paragraph (a) or (b) of this section 5., the engineer shall (1) promptly discontinue all services affected (unless the notice directs otherwise), and (2) deliver or otherwise make available to the owner all data, drawings, specifications, reports, estimates, summaries, and such other information and materials as the engineer may have accumulated in performing this agreement, whether completed or in process.

(e) Upon termination under paragraph (a) or (b) of this section 5., the owner may take over the work and prosecute the same to completion by agreement with another party or otherwise. Any work the owner takes over for completion will be completed at the owner's risk, and the owner will hold harmless the engineer from all claims and damages arising out of improper use of the engineer's work.

(f) If, after termination for failure of the engineer to fulfill contractual obligations, it is determined that the engineer had not so failed, the termination shall be deemed to have been effected for the convenience of the owner. In such event, adjustment of the price provided for in this agreement shall be made as paragraph (c) of this clause provides.

6. REMEDIES

Except as this agreement otherwise provides, all claims, counter-claims, disputes, and other matters in question between the owner and the engineer arising out of or relating to this agreement or the breach of it will be decided by arbitration if the parties hereto mutually agree, or in a court of competent jurisdiction within the State in which the owner is located.

7. PAYMENT

(a) Payment shall be made in accordance with the payment schedule incorporated in this agreement as soon as practicable upon submission of statements requesting payment by the engineer to the owner. If no such payment schedule is incorporated in this agreement, the payment provisions of paragraph (b) of this clause shall apply.

(b) The engineer may request monthly progress payments and the owner shall make them as soon as practicable upon submission of statements requesting payment by the engineer to the owner. When such progress payments are made, the owner may withhold up to ten (10) percent of the vouchered amount until satisfactory completion by the engineer of work and services within a step called for under this agreement. When the owner determines that the work under this agreement or any specified task hereunder is substantially complete and that the amount of retained percentages is in excess of the amount considered by him to be adequate for his protection, he shall release to the engineer such excess amount.

(c) No payment request made under paragraph (a) or (b) of this clause shall exceed the estimated amount and value of the work and services performed by the engineer under this agreement. The engineer shall prepare the estimates of work performed and shall supplement them with such supporting data as the owner may require.

(d) Upon satisfactory completion of the work performed under this agreement, as a condition precedent to final payment under this agreement or to settlement upon termination of the agreement, the engineer shall execute and deliver to the owner a release of all claims against the owner arising under or by virtue of this agreement, other than such claims, if any, as may be specifically exempted by the engineer from the operation of the release in stated amounts to be set forth therein.

8. PROJECT DESIGN

(a) In the performance of this agreement, the engineer shall, to the extent practicable, provide for maximum use of structures, machines, products, materials, construction methods, and equipment which are readily available through competitive procurement, or through standard or proven production

techniques, methods, and processes, consistent with 40 CFR 35.936–3 and 35.936–13 in effect on the date of execution of this agreement, except to the extent to which innovative technology may be used under 40 CFR 35.908 in effect on the date of execution of this agreement.

(b) The engineer shall not, in the performance of the work under this agreement, produce a design or specification which would require the use of structures, machines, products, materials, construction methods, equipment, or processes which the engineer knows to be available only from a sole source, unless the engineer has adequately justified the use of a sole source in writing.

(c) The engineer shall not, in the performance of the work under this agreement, produce a design or specification which would be restrictive in violation of section 204(a)(6) of the Clean Water Act. This statute requires that no specification for bids or statement of work shall be written in such a manner as to contain proprietary, exclusionary, or discriminatory requirements other than those based upon performance, unless such requirements are necessary to test or demonstrate a specific thing, or to provide for necessary interchangeability of parts and equipment, or at least two brand names or trade names of comparable quality or utility are listed and are followed by the words ''or equal.'' With regard to materials, if a single material is specified, the engineer must be prepared to substantiate the basis for the selection of the material.

(d) The engineer shall report to the owner any sole-source or restrictive design or specification giving the reason or reasons why it is necessary to restrict the design or specification.

(e) The engineer shall not knowingly specify or approve the performance of work at a facility which is in violation of clean air or water standards and which is listed by the Director of the EPA Office of Federal Activities under 40 CFR part 15.

9. AUDIT; ACCESS TO RECORDS

(a) The engineer shall maintain books, records, documents, and other evidence directly pertinent to performance on EPA grant work under this agreement in accordance with generally accepted accounting principles and practices consistently applied, and 40 CFR 30.605, 30.805, and 35.935–7 in effect on the date of execution of this agreement. The engineer shall also maintain the financial information and data used by the engineer in the preparation or support of the cost submission required under 40 CFR 35.937–6(b) in effect on the date of execution of this agreement and a copy of the cost summary submitted to the owner. The U.S. Environmental Protection Agency, the Comptroller General of the United States, the U.S. Department of Labor, owner, and [the State water pollution control agency] or any of their duly authorized representatives shall have access to such books, records, documents, and other evidence for inspection, audit, and copying. The engineer will provide proper facilities for such access and inspection.

(b) The engineer agrees to include paragraphs (a) through (e) of this clause in all his contracts and all tier subcontracts directly related to project performance that are in excess of $10,000.

(c) Audits conducted under this provision shall be in accordance with generally accepted auditing standards and established procedures and guidelines of the reviewing or audit agency(ies).

(d) The engineer agrees to the disclosure of all information and reports resulting from access to records under paragraphs (a) and (b) of this clause, to any of the agencies referred to in paragraph (a), provided that the engineer is afforded the opportunity for an audit exit conference and an opportunity to comment and submit any supporting documentation on the pertinent portions of the draft audit report and that the final audit report will include written comments of reasonable length, if any, of the engineer.

(e) The engineer shall maintain and make available records under paragraphs (a) and (b) of this clause during performance on EPA grant work under this agreement and until 3 years from the date of final EPA grant payment for the project. In addition, those records which relate to any ''Dispute'' appeal under an EPA grant agreement, to litigation, to the settlement of claims arising out of such performance, or to costs or items to which an audit exception has been taken, shall be maintained and made available until 3 years after the date of resolution of such appeal, litigation, claim, or exception.

10. PRICE REDUCTION FOR DEFECTIVE COST OR PRICING DATA

(This clause is applicable if the amount of this agreement exceeds $100,000.)

(a) If the owner or EPA determines that any price, including profit, negotiated in connection with this agreement or any cost reimbursable under this agreement was increased by any significant sums because the engineer or any subcontractor furnished incomplete or inaccurate cost or pricing data or data not current as certified in his certification of current cost or pricing data (EPA form 5700–41), then such price, cost, or profit shall be reduced accordingly and the agreement shall be modified in writing to reflect such reduction.

(b) Failure to agree on a reduction shall be subject to the remedies clause of this agreement.

(Note: Since the agreement is subject to reduction under this clause by reason of defective cost or pricing data submitted in connection with certain subcontracts, the engineer may wish to include a clause in each such subcontract requiring the subcontractor to appropriately indemnify the engineer. It is also expected that any subcontractor subject to such indemnification will generally require substantially similar indemnification for defective cost or pricing data required to be submitted by his lower tier subcontractors.)

11. SUBCONTRACTS

(a) Any subcontractors and outside associates or consultants required by the engineer in connection with services under this agreement will be limited to such individuals or firms as were specifically identified and agreed to during negotiations, or as the owner specifically authorizes during the performance of this agreement. The owner must give prior approval for any substitutions in or additions to such subcontractors, associates, or consultants.

(b) The engineer may not subcontract services in excess of thirty (30) percent (or ——— percent, if the owner and the engineer hereby agree) of the contract price to subcontractors or consultants without the owner's prior written approval.

12. LABOR STANDARDS

To the extent that this agreement involves ''construction'' (as defined by the Secretary of Labor), the engineer agrees that such construction work shall be subject to the following labor standards provisions, to the extent applicable:

(a) Davis-Bacon Act (40 U.S.C. 276a—276a–7);

(b) Contract Work Hours and Safety Standards Act (40 U.S.C. 327–333);

(c) Copeland Anti-Kickback Act (18 U.S.C. 874); and

(d) Executive Order 11246 (Equal Employment Opportunity);

and implementing rules, regulations, and relevant orders of the Secretary of Labor or EPA. The engineer further agrees that this agreement shall include and be subject to the ''Labor Standards Provisions for Federally Assisted Construction Contracts'' (EPA form 5720–4) in effect at the time of execution of this agreement.

13. EQUAL EMPLOYMENT OPPORTUNITY

In accordance with EPA policy as expressed in 40 CFR 30.420–5, the engineer agrees that he will not discriminate against any employee or applicant for employment because of race, religion, color, sex, age, or national origin.

14. UTILIZATION OF SMALL AND MINORITY BUSINESS

In accordance with EPA policy as expressed in 40 CFR 35.936–7, the engineer agrees that qualified small business and minority business enterprises shall have the maximum practicable opportunity to participate in the performance of EPA grant-assisted contracts and subcontracts.

15. COVENANT AGAINST CONTINGENT FEES

The engineer warrants that no person or selling agency has been employed or retained to solicit or secure this contract upon an agreement or understanding for a commission, percentage, brokerage, or contingent fee, excepting bona fide employees. For breach or violation of this warranty the owner shall have the right to annul this agreement without liability or in its discretion to deduct from the contract price or consideration, or otherwise recover, the full amount of such commission, percentage, brokerage, or contingent fee.

16. GRATUITIES

(a) If it is found, after notice and hearing, by the owner that the engineer, or any of the engineer's agents or representatives, offered or gave gratuities (in the form of entertainment, gifts, or otherwise), to any official, employee, or agent of the owner, of the State, or of EPA in an attempt to secure a contract or favorable treatment in awarding, amending, or making any determinations related to the performance of this agreement, the owner may, by written notice to the engineer, terminate the right of the engineer to proceed under this agreement. The owner may also pursue other rights and remedies that the law or this agreement provides. However, the existence of the facts upon which the owner bases such findings shall be in issue and may be reviewed in proceedings under the remedies clause of this agreement.

(b) In the event this agreement is terminated as provided in paragraph (a) hereof, the owner shall be entitled: (1) To pursue the same remedies against the engineer as it could pursue in the event of a breach of the contract by the engineer, and (2) as a penalty, in addition to any other damages to which it may be entitled by law, to exemplary damages in an amount (as determined by the owner) which shall be not less than 3 nor more than 10 times the costs the engineer incurs in providing any such gratuities to any such officer or employee.

17. PATENTS

If this agreement involves research, developmental, experimental, or demonstration work and any discovery or invention arises or is developed in the course of or under this agreement, such invention or discovery shall

be subject to the reporting and rights provisions of subpart D of 40 CFR part 30, in effect on the date of execution of this agreement, including appendix B of part 30. In such case, the engineer shall report the discovery or invention to EPA directly or through the owner, and shall otherwise comply with the owner's responsibilities in accordance with subpart D of 40 CFR part 30. The engineer agrees that the disposition of rights to inventions made under this agreement shall be in accordance with the terms and conditions of appendix B. The engineer shall include appropriate patent provisions to achieve the purpose of this condition in all subcontracts involving research, developmental, experimental, or demonstration work.

18. COPYRIGHTS AND RIGHTS IN DATA

(a) The engineer agrees that any plans, drawings, designs, specifications, computer programs (which are substantially paid for with EPA grant funds), technical reports, operating manuals, and other work submitted with a step 1 facilities plan or with a step 2 or step 3 grant application or which are specified to be delivered under this agreement or which are developed or produced and paid for under this agreement (referred to in this clause as ''Subject Data'') are subject to the rights in the United States, as set forth in subpart D of 40 CFR part 30 and in appendix C to 40 CFR part 30, in effect on the date of execution of this agreement. These rights include the right to use, duplicate, and disclose such subject data, in whole or in part, in any manner for any purpose whatsoever, and to have others do so. For purposes of this clause, ''grantee'' as used in appendix C refers to the engineer. If the material is copyrightable, the engineer may copyright it, as appendix C permits, subject to the rights in the Government in appendix C, but the owner and the Federal Government reserve a royalty-free, nonexclusive, and irrevocable license to reproduce, publish, and use such materials, in whole or in part, and to authorize others to do so. The engineer shall include appropriate provisions to achieve the purpose of this condition in all subcontracts expected to produce copyrightable subject data.

(b) All such subject data furnished by the engineer pursuant to this agreement are instruments of his services in respect of the project. It is understood that the engineer does not represent such subject data to be suitable for reuse on any other project or for any other purpose. If the owner reuses the subject data without the engineer's specific written verification or adaptation, such reuse will be at the risk of the owner, without liability to the engineer. Any such verification or adaptation will entitle the engineer to further compensation at rates agreed upon by the owner and the engineer.

APPENDIX C–2—REQUIRED PROVISIONS—CONSTRUCTION CONTRACTS

SUPPLEMENTAL GENERAL CONDITIONS

1. General
2. Changes
3. Differing Site Conditions
4. Suspension of Work
5. Termination for Default; Damages for Delay; Time Extensions
6. Termination for Convenience
7. Remedies
8. Labor Standards
9. Utilization of Small or Minority Business
10. Audit; Access to Records
11. Price Reduction for Defective Cost or Pricing Data
12. Covenant Against Contingent Fees
13. Gratuities
14. Patents
15. Copyrights and Rights in Data
16. Prohibition Against Listed Violating Facilities
17. Buy American

1. GENERAL

(a) The owner and the contractor agree that the following supplemental general provisions apply to the work to be performed under this contract and that these provisions supersede any conflicting provisions of this contract.

(b) This contract is funded in part by a grant from the U.S. Environmental Protection Agency. Neither the United States nor any of its departments, agencies or employees is a party to this contract. This contract is subject to regulations contained in 40 CFR 35.936, 35.938, and 35.939 in effect on the date of execution of this contract.

(c) The owner's rights and remedies provided in these clauses are in addition to any other rights and remedies provided by law or under this contract.

2. CHANGES

(a) The owner may, at any time, without notice to the sureties, by written order designated or indicated to be a change order, make any change in the work within the general scope of the contract, including but not limited to changes—

(1) In the specifications (including drawings and designs);

(2) In the method or manner of performance of the work;

(3) In the owner-furnished facilities, equipment, materials, services, or site; or

(4) Directing acceleration in the performance of the work.

(b) Any other written order or an oral order (which terms as used in this paragraph (b) shall include direction, instruction, interpretation, or determination) from the owner, which causes any such change, shall be

treated as a change order under this clause, if the contractor gives the owner written notice stating the date, circumstances, and source of the order and if the contractor regards the order as a change order.

(c) Except as provided in this clause, no order, statement, or conduct of the owner shall be treated as a change under this clause or shall entitle the contractor to an equitable adjustment.

(d) If any change under this clause causes an increase or decrease in the contractor's cost of, or the time required for, the performance of any part of the work under this contract, whether or not changed by any order, an equitable adjustment shall be made and the contract modified in writing accordingly. However, except for claims based on defective specifications, no claim for any change under paragraph (b) of this section 2., shall be allowed for any costs incurred more than 20 days before the contractor gives written notice as there required. Also, in the case of defective specifications for which the owner is responsible, the equitable adjustment shall include any increased cost reasonably incurred by the contractor in attempting to comply with such defective specifications.

(e) If the contractor intends to assert a claim for an equitable adjustment under this clause, he must, within 30 days after receipt of a written change order under (a) above or the furnishing of a written notice under paragraph (b) of this section 2., submit to the owner a written statement setting forth the general nature and monetary extent of such claim, unless the owner extends this period. The statement of claim hereunder may be included in the notice under paragraph (b) of this section 2.

(f) No claim by the contractor for an equitable adjustment hereunder shall be allowed if asserted after final payment under this contract.

3. DIFFERING SITE CONDITIONS

(a) The contractor shall promptly, and before such conditions are disturbed, notify the owner in writing of: (1) Subsurface or latent physical conditions at the site differing materially from those indicated in this contract, or (2) unknown physical conditions at the site, of an unusual nature, differing materially from those ordinarily encountered and generally recognized as inhering in work of the character provided for in this contract. The owner shall promptly investigate the conditions. If he finds that such conditions do materially differ and cause an increase or decrease in the contractor's cost of, or the time required for, performance of any part of the work under this contract, whether or not changed as a result of such conditions, an equitable adjustment shall be made and the contract modified in writing accordingly.

(b) No claim of the contractor under this clause shall be allowed unless the contractor has given the notice required in paragraph (a) of this clause, except that the owner may extend the prescribed time.

(c) No claim by the contractor for an equitable adjustment hereunder shall be allowed if asserted after final payment under this contract.

4. SUSPENSION OF WORK

(a) The owner may order the contractor in writing to suspend, delay, or interrupt all or any part of the work for such period of time as he may determine to be appropriate for the convenience of the owner.

(b) If the performance of all or any part of the work is, for an unreasonable period of time, suspended, delayed, or interrupted by an act of the owner in administration of this contract, or by his failure to act within the time specfied in this contract (or if no time is specified, within a reasonable time), an adjustment shall be made for any increase in the cost of performance of this contract (excluding profit) necessarily caused by such unreasonable suspension, delay, or interruption, and the contract modified in writing accordingly. However, no adjustment shall be made under this clause for any suspension, delay, or interruption to the extent (1) that performance would have been so suspended, delayed, or interrupted by any other cause, including the fault or negligence of the contractor or (2) for which an equitable adjustment is provided for or excluded under any other provision of this contract.

(c) No claim under this clause shall be allowed (1) for any costs incurred more than 20 days before the contractor shall have notified the owner in writing of the act or failure to act involved (but this requirement shall not apply as to a claim resulting from a suspension order), and (2) unless the claim, in an amount stated, is asserted in writing as soon as practicable after the termination of such suspension, delay, or interruption, but not later than the date of final payment under the contract.

5. TERMINATION FOR DEFAULT; DAMAGES FOR DELAY; TIME EXTENSIONS

(a) If the contractor refuses or fails to prosecute the work, or any separable part of the work, with such diligence as will insure its completion within the time specified in this contract, or any extension thereof, or fails to complete said work within such time, the owner may, by written notice to the contractor, terminate his right to proceed with the work or such part of the work as to which there has been delay. In such event the owner may take over the work and prosecute the same to completion, by contract or otherwise, and may take possession of and use in completing the work such materials,

appliances, and plant as may be on the site of the work and necessary therefor. Whether or not the contractor's right to proceed with the work is terminated, he and his sureties shall be liable for any damage to the owner resulting from his refusal or failure to complete the work within the specified time.

(b) If the contract provides for liquidated damages, and if the owner terminates the contractor's right to proceed, the resulting damage will consist of such liquidated damages until such reasonable time as may be required for final completion of the work together with any increased costs the owner incurs in completing the work.

(c) If the contract provides for liquidated damages and if the owner does not terminate the contractor's right to proceed, the resulting damage will consist of such liquidated damages until the work is completed or accepted.

(d) The contractor's right to proceed shall not be terminated nor the contractor charged with resulting damage if:

(1) The delay in the completion of the work arises from causes other than normal weather beyond the control and without the fault or negligence of the contractor, including, but not restricted to, acts of God, acts of the public enemy, acts of the owner in either its sovereign or contractual capacity, acts of another contractor in the performance of a contract with the owner, fires, floods, epidemics, quarantine restrictions, strikes, freight embargoes, unusually severe weather, or delays of subcontractors or suppliers arising from causes other than normal weather beyond the control and without the fault or negligence of both the contractor and such subcontractors or suppliers; and

(2) The contractor, within 10 days from the beginning of any such delay (unless the owner grants a further period of time before the date of final payment under the contract), notifies the owner in writing of the causes of delay. The owner shall ascertain the facts and the extent of the delay and extend the time for completing the work when, in his judgment, the findings of fact justify such an extension. His findings of fact shall be final and conclusive on the parties, subject only to appeal as the remedies clause of this contract provides.

(e) If, after notice of termination of the contractor's right to proceed under the provisions of this clause, it is determined for any reason that the contractor was not in default under this clause, or that the delay was excusable under this clause, the rights and obligations of the parties shall be the same as if the notice of termination has been issued under the clause providing for termination for convenience of the owner.

(f) The rights and remedies of the owner provided in this clause are in addition to any other rights and remedies provided by law or under this contract.

(g) As used in paragraph (d)(1) of this clause, the term ''subcontractors or suppliers'' means subcontractors or suppliers at any tier.

6. TERMINATION FOR CONVENIENCE

(a) The owner may terminate the performance of work under this contract in accordance with this clause in whole, or from time to time in part, whenever the owner shall determine that such termination is in the best interest of the owner. Any such termination shall be effected by delivery to the contractor of a notice of termination specifying the extent to which performance of work under the contract is terminated, and the date upon which such termination becomes effective.

(b) After receipt of a notice of termination, and except as otherwise directed by the owner, the contractor shall:

(1) Stop work under the contract on the date and to the extent specified in the notice of termination;

(2) Place no further orders or subcontracts for materials, services, or facilities except as necessary to complete the portion of the work under the contract which is not terminated;

(3) Terminate all orders and subcontracts to the extent that they relate to the performance of work terminated by the notice of termination;

(4) Assign to the owner, in the manner, at the times, and to the extent directed by the owner, all of the right, title, and interest of the contractor under the orders and subcontracts so terminated. The owner shall have the right, in its discretion, to settle or pay any or all claims arising out of the termination of such orders and subcontracts;

(5) Settle all outstanding liabilities and all claims arising out of such termination of orders and subcontracts, with the approval or ratification of the owner to the extent he may require. His approval or ratification shall be final for all the purposes of this clause;

(6) Transfer title to the owner, and deliver in the manner, at the times, and to the extent, if any, directed by the owner, (i) the fabricated or unfabricated parts, work in process, completed work, supplies, and other material produced as a part of, or acquired in connection with the performance of, the work terminated by the notice of termination, and (ii) the completed or partially completed plans, drawings, information, and other property which, if the contract had been completed, would have been required to be furnished to the owner;

(7) Use his best efforts to sell, in the manner, at the times, to the extent, and at the price or prices that the owner directs or authorizes, any property of the types referred to in paragraph (b)(6) of this clause, but the contractor (i) shall not be required to extend

credit to any purchaser, and (ii) may acquire any such property under the conditions prescribed and at a price or prices approved by the owner. The proceeds of any such transfer or disposition shall be applied in reduction of any payments to be made by the owner to the contractor under this contract or shall otherwise be credited to the price or cost of the work covered by this contract or paid in such other manner as the owner may direct;

(8) Complete performance of such part of the work as shall not have been terminated by the notice of termination; and

(9) Take such action as may be necessary, or as the owner may direct, for the protection and preservation of the property related to this contract which is in the possession of the contractor and in which the owner has or may acquire an interest.

(c) After receipt of a notice of termination, the contractor shall submit to the owner his termination claim, in the form and with the certification the owner prescribes. Such claim shall be submitted promptly but in no event later than 1 year from the effective date of termination, unless one or more extensions in writing are granted by the owner upon request of the contractor made in writing within such 1-year period or authorized extension. However, if the owner determines that the facts justify such action, he may receive and act upon any such termination claim at any time after such 1-year period or extension. If the contractor fails to submit his termination claim within the time allowed, the owner may determine, on the basis of information available to him, the amount, if any, due to the contractor because of the termination. The owner shall then pay to the contractor the amount so determined.

(d) Subject to the provisions of paragraph (c), the contractor and the owner may agree upon the whole or any part of the amount or amounts to be paid to the contractor because of the total or partial termination of work under this clause. The amount or amounts may include a reasonable allowance for profit on work done. However, such agreed amount or amounts, exclusive of settlement costs, shall not exceed the total contract price as reduced by the amount of payments otherwise made and as further reduced by the contract price of work not terminated. The contract shall be amended accordingly, and the contractor shall be paid the agreed amount. Nothing in paragraph (e) of this clause, prescribing the amount to be paid to the contractor in the event of failure of the contractor and the owner to agree upon the whole amount to be paid to the contractor because of the termination of work under this clause, shall be deemed to limit, restrict, or otherwise determine or affect the amount or amounts which may be agreed upon to be paid to the contractor pursuant to this paragraph (d).

(e) If the contractor and the owner fail to agree, as paragraph (d) of this section 6., provides, on the whole amount to be paid to the contractor because of the termination of work under this clause, the owner shall determine, on the basis of information available to him, the amount, if any, due to the contractor by reason of the termination and shall pay to the contractor the amounts determined as follows:

(1) For all contract work performed before the effective date of the notice of termination, the total (without duplication of any items) of—

(i) The cost of such work;

(ii) The cost of settling and paying claims arising out of the termination of work under subcontracts or orders as paragraph (b)(5) of this clause provides. This cost is exclusive of the amounts paid or payable on account of supplies or materials delivered or services furnished by the subcontractor before the effective date of the notice of termination. These amounts shall be included in the cost on account of which payment is made under paragraph (1)(i) of this section 6.; and

(iii) A sum, as profit on paragraph (1)(i) of this section 6., that the owner determines to be fair and reasonable. But, if it appears that the contractor would have sustained a loss on the entire contract had it been completed, no profit shall be included or allowed under this paragraph (1)(iii) of this section 6., and an appropriate adjustment shall be made reducing the amount of the settlement to reflect the indicated rate of loss; and

(2) The reasonable cost of the preservation and protection of property incurred under paragraph (b)(9) of this clause; and any other reasonable cost incidental to termination of work under this contract, including expense incidental to the determination of the amount due to the contractor as the result of the termination of work under this contract. The total sum to be paid to the contractor under paragraph (e)(1) of this clause shall not exceed the total contract price as reduced by the amount of payments otherwise made and as further reduced by the contract price of work not terminated. Except for normal spoilage, and except to the extent that the owner shall have otherwise expressly assumed the risk of loss, there shall be excluded from the amounts payable to the contractor under paragraph (1) of this clause 6., the fair value, as determined by the owner of property which is destroyed, lost, stolen, or damaged, to the extent that it is un-deliverable to the owner, or to a buyer under paragraph (b)(7) of this clause.

(f) The contractor shall have the right to dispute under the clause of this contract entitled ''Remedies,'' from any determination the owner makes under paragraph (c) or (e) of this clause. But, if the contractor has failed to submit his claim within the time provided in paragraph (c) of this clause and

has failed to request extension of such time, he shall have no such right of appeal. In any case where the owner has determined the amount due under paragraph (c) or (e) of this clause, the owner shall pay to the contractor the following: (1) If there is no right of appeal hereunder or if no timely appeal has been taken, the amount so determined by the owner or (2) if a ''Remedies'' proceeding is initiated, the amount finally determined in such ''Remedies'' proceeding.

(g) In arriving at the amount due the contractor under this clause there shall be deducted (1) all unliquidated advance or other payments on account theretofore made to the contractor, applicable to the terminated portion of this contract, (2) any claim which the owner may have against the contractor in connection with this contract, and (3) the agreed price for, or the proceeds of sale of, any materials, supplies, or other things kept by the contractor or sold, under the provisions of this clause, and not otherwise recovered by or credited to the owner.

(h) If the termination hereunder be partial, before the settlement of the terminated portion of this contract, the contractor may file with the owner a request in writing for an equitable adjustment of the price or prices specified in the contract relating to the continued portion of the contract (the portion not terminated by the notice of termination). Such equitable adjustment as may be agreed upon shall be made in the price or prices. Nothing contained herein shall limit the right of the owner and the contractor to agree upon the amount or amounts to be paid to the contractor for the completion of the continued portion of the contract when the contract does not contain an established contract price for the continued portion.

7. REMEDIES

Unless this contract provides otherwise, all claims, counterclaims, disputes and other matters in question between the owner and the contractor arising out of or relating to this agreement or its breach will be decided by arbitration if the parties mutually agree, or in a court of competent jurisdiction within the State in which the owner is located.

8. LABOR STANDARDS

The contractor agrees that ''construction'' work (as defined by the Secretary of Labor) shall be subject to the following labor standards provisions, to the extent applicable:

(a) Davis-Bacon Act (40 U.S.C. 276a—276a–7);

(b) Contract Work Hours and Safety Standards Act (40 U.S.C. 327–33);

(c) Copeland Anti-Kickback Act (18 U.S.C. 874); and

(d) Executive Order 11246 (equal employment opportunity);

and implementing rules, regulations, and relevant orders of the Secretary of Labor or EPA. The contractor further agrees that this contract shall include and be subject to the ''Labor Standards Provisions for Federally assisted Construction Contracts'' (EPA form 5720–4) in effect at the time of execution of this agreement.

9. UTILIZATION OF SMALL AND MINORITY BUSINESS

In accordance with EPA policy as expressed in 40 CFR 35.936–7, the contractor agrees that small business and minority business enterprises shall have the maximum practicable opportunity to participate in the performance of EPA grant-assisted contracts and subcontracts.

10. AUDIT; ACCESS TO RECORDS

(a) The contractor shall maintain books, records, documents and other evidence directly pertinent to performance on EPA grant work under this contract in accordance with generally accepted accounting principles and practices consistently applied, and 40 CFR 30.605, 30.805, and 35.935–7 in effect on the date of execution of this contract. The contractor shall also maintain the financial information and data used by the contractor in the preparation or support of the cost submission required under 40 CFR 35.938–5 in effect on the date of execution of this contract for any negotiated contract or change order and a copy of the cost summary submitted to the owner. The U.S. Environmental Protection Agency, the Comptroller General of the United States, the U.S. Department of Labor, owner, and (the State water pollution control agency) or any of their authorized representatives shall have access to such books, records, documents and other evidence for the purpose of inspection, audit and copying. The contractor will provide proper facilities for such access and inspection.

(b) If this contract is a formally advertised, competitively awarded, fixed price contract, the contractor agrees to make paragraphs (a) through (f) of this clause applicable to all negotiated change orders and contract amendments affecting the contract price. In the case of all other types of prime contracts, the contractor agrees to include paragraphs (a) through (f) of this clause in all his contracts in excess of $10,000 and all tier subcontracts in excess of $10,000 and to make paragraphs (a) through (f) of this clause applicable to all change orders directly related to project performance.

(c) Audits conducted under this provision shall be in accordance with generally accepted auditing standards and established procedures and guidelines of the reviewing or audit agency(ies).

(d) The contractor agrees to the disclosure of all information and reports resulting from access to records under paragraphs (a) and (b) of this clause, to any of the agencies referred to in paragraph (a) of this clause 10., provided that the contractor is afforded the opportunity for an audit exit conference, and an opportunity to comment and submit any supporting documentation on the pertinent portions of the draft audit report and that the final EPA audit report will include written comments of reasonable length, if any, of the contractor.

(e) Records under paragraphs (a) and (b) of this clause 10., shall be maintained and made available during performance on EPA grant work under this contract and until 3 years from the date of final EPA grant payment for the project. In addition, those records which relate to any ''Dispute'' appeal under an EPA grant agreement, to litigation, to the settlement of claims arising out of such performance, or to costs or items to which an audit exception has been taken, shall be maintained and made available until three years after the date of resolution of such appeal, litigation, claim or exception.

(f) The right of access which this clause confers will generally be exercised (with respect to financial records) under (1) negotiated prime contracts, (2) negotiated change orders or contract amendments in excess of $10,000 affecting the price of any formally advertised, competitively awarded, fixed price contract, and (3) subcontracts or purchase orders under any contract other than a formally advertised, competitively awarded, fixed price contract. However, this right of access will generally not be exercised with respect to a prime contract, subcontract, or purchase order awarded after effective price competition. In any event, such right of access may be exercised under any type of contract or subcontract (1) with respect to records pertaining directly to contract performance, excluding any financial records of the contractor, (2) if there is any indication that fraud, gross abuse, or corrupt practices may be involved or (3) if the contract is terminated for default or for convenience.

11. PRICE REDUCTION FOR DEFECTIVE COST OR PRICING DATA

(This clause is applicable to (1) any negotiated prime contract in excess of $100,000; (2) negotiated contract amendments or change orders in excess of $100,000 affecting the price of a formally advertised, competitively awarded, fixed price contract; or (3) any subcontract or purchase order in excess of $100,000 under a prime contract other than a formally advertised, competitively awarded, fixed price contract. Change orders shall be determined to be in excess of $100,000 in accordance with 40 CFR 35.938–5(g). However, this clause is not applicable for contracts or subcontracts to the extent that they are awarded on the basis of effective price competition.)

(a) If the owner or EPA determines that any price (including profit) negotiated in connection with this contract, or any cost reimbursable under this contract, was increased by any significant sums because the contractor, or any subcontractor furnished incomplete or inaccurate cost or pricing data or data not current as certified in his certification of current cost or pricing data (EPA form 5700–41), then such price or cost or profit shall be reduced accordingly and the contract shall be modified in writing to reflect such reduction.

(b) Failure to agree on a reduction shall be subject to the Remedies clause of this contract.

(Note: Since the contract is subject to reduction under this clause by reason of defective cost or pricing data submitted in connection with certain subcontracts, the contractor may wish to include a clause in each such subcontract requiring the subcontractor to appropriately indemnify the contractor. It is also expected that any subcontractor subject to such indemnification will generally require substantially similar indemnification for defective cost or pricing data required to be submitted by his lower tier subcontractors.)

12. COVENANT AGAINST CONTINGENT FEES

The contractor warrants that no person or selling agency has been employed or retained to solicit or secure this contract upon an agreement or understanding for a commission, percentage, brokerage, or contingent fee, excepting bona fide employees or bona fide established commercial or selling agencies maintained by the contractor for the purpose of securing business. For breach or violation of this warranty the owner shall have the right to annul this contract without liability or in its discretion to deduct from the contract price or consideration, or otherwise recover, the full amount of such commission, percentage, brokerage, or contingent fee.

13. GRATUITIES

(a) If the owner finds, after notice and hearing, that the contractor or any of the contractor's agents or representatives offered or gave gratuities (in the form of entertainment, gifts, or otherwise) to any official, employee or agent of the owner, of the State, or of EPA in an attempt to secure a contract or favorable treatment in the awarding, amending, or making any determinations related to the performance of this contract,

the owner may, by written notice to the contractor, terminate the right of the contractor to proceed under this contract. The owner may also pursue other rights and remedies that the law or this contract provides. However, the existence of the facts upon which the owner makes such findings shall be in issue and may be reviewed in proceedings under the remedies clause of this contract.

(b) In the event this contract is terminated as provided in paragraph (a) of this clause, the owner shall be entitled (1) to pursue the same remedies against the contractor as it could pursue in the event of a breach of the contract by the contractor, and (2) as a penalty in addition to any other damages to which it may be entitled by law, to exemplary damages in an amount (as determined by the owner) which shall be not less than 3 nor more than 10 times the costs the contractor incurs in providing any such gratuities to any such officer or employee.

14. PATENTS

If this contract involves research, developmental, experimental, or demonstration work, and any discovery or invention arises or is developed in the course of or under this contract, such invention or discovery shall be subject to the reporting and rights provisions of subpart D of 40 CFR part 30, in effect on the date of execution of this contract, including Appendix B of part 30. In such case, the contractor shall report the discovery or invention to EPA directly or through the owner, and shall otherwise comply with the owner's responsibilities in accordance with subpart D of 40 CFR part 30. The contractor agrees that the disposition of rights to inventions made under this contract shall be in accordance with the terms and conditions of Appendix B. The contractor shall include appropriate patent provisions to achieve the intent of this condition in all subcontracts involving research, developmental, experimental, or demonstration work.

15. COPYRIGHTS AND RIGHTS IN DATA

The contractor agrees that any plans, drawings, designs, specifications, computer programs (which are substantially paid for with EPA grant funds), technical reports, operating manuals, and other work submitted with a proposal or grant application or which are specified to be delivered under this contract or which are developed or produced and paid for under this contract (referred to in this clause as ''Subject Data'') are subject to the rights in the United States, as set forth in subpart D of 40 CFR part 30 and in appendix C to 40 CFR part 30, in effect on the date of execution of this contract. These rights include the right to use, duplicate and disclose such Subject Data, in whole or in part, in any manner for any purpose whatsoever, and to have others do so. For purposes of this clause, ''grantee'' as used in appendix C refers to the contractor. If the material is copyrightable, the contractor may copyright it, as appendix C permits, subject to the rights in the Government as set forth in appendix C, but the owner and the Federal Government reserve a royalty-free, nonexclusive, and irrevocable license to reproduce, publish and use such materials, in whole or in part, and to authorize others to do so. The contractor shall include provisions appropriate to achieve the intent of this condition in all subcontracts expected to produce copyrightable Subject Data.

16. PROHIBITION AGAINST LISTED VIOLATING FACILITIES

(Applicable only to a contract in excess of $100,000 and when otherwise applicable under 40 CFR part 15.)

(a) The contractor agrees as follows:

(1) To comply with all the requirements of section 114 of the Clean Air Act, as amended (42 U.S.C. 1857, *et seq.*, as amended by Pub. L. 92–604) and section 308 of the Clean Water Act (33 U.S.C. 1251, as amended), respectively, which relate to inspection, monitoring, entry, reports, and information, as well as other requirements specified in section 114 and section 308 of the Air Act and the Water Act, respectively, and all regulations and guidelines issued thereunder before the award of this contract.

(2) That no portion of the work required by this prime contract will be performed in a facility listed on the Environmental Protection Agency list of violating facilities on the date when this contract was awarded unless and until the EPA eliminates the name of such facility or facilities from the listing.

(3) To use his best efforts to comply with clean air and clean water standards at the facilities in which the contract is being performed.

(4) To insert the substance of the provisions of this clause, including this paragraph (4), in any nonexempt subcontract.

(b) The terms used in this clause have the following meanings:

(1) The term *Air Act* means the Clean Air Act, as amended (42 U.S.C. 1857 *et seq.*).

(2) The term *Water Act* means the Clean Water Act, as amended (33 U.S.C. 1251 *et seq.*).

(3) The term *Clean Air Standards* means any enforceable rules, regulations, guidelines, standards, limitations, orders, controls, prohibitions, or other requirements which are contained in, issued under, or otherwise adopted under the Air Act or Executive Order 11738, an applicable implementation plan as described in section 110(d) of the Air Act (42 U.S.C. 1857c–5(d)), an approved implementation procedure or plan under section 111(c) or section 111(d), or an approved implementation procedure under section 112(d) of the Air Act (42 U.S.C. 1857c–7(d)).

(4) The term *Clean Water Standards* means any enforceable limitation, control, condition, prohibition, standard, or other requirement which is promulgated under the Water Act or contained in a permit issued to a discharger by the Environmental Protection Agency or by a State under an approved program, as authorized by section 402 of the Water Act (33 U.S.C. 1342), or by a local government to ensure compliance with pretreatment regulations as required by section 307 of the Water Act (33 U.S.C. 1317).

(5) The term *Compliance* means compliance with clean air or water standards. Compliance shall also mean compliance with a schedule or plan ordered or approved by a court of competent jurisdiction, the Envrionmental Protection Agency or an Air or Water Pollution Control Agency in accordance with the requirements of the Air Act or Water Act and regulations.

(6) The term *Facility* means any building, plant, installation, structure, mine, vessel, or other floating craft, location, or site of operations, owned, leased, or supervised by a contractor or subcontractor, to be used in the performance of a contract or subcontract. Where a location or site of operations contains or includes more than one building, plant, installation, or structure, the entire location or site shall be deemed to be a facility except where the Director, Office of Federal Activities, Environmental Protection Agency, determines that independent facilities are located in one geographical area.

17. BUY AMERICAN

In accordance with section 215 of the Clean Water Act, and implementing EPA regulations and guidelines, the contractor agrees that preference will be given to domestic construction material by the contractor, subcontractors, materialmen, and suppliers in the performance of this contract.

[43 FR 44049, Sept. 27, 1978, as amended at 44 FR 37596, June 27, 1979; 44 FR 39340, July 5, 1979]

APPENDIX D—EPA TRANSITION POLICY—EXISTING CONSULTING ENGINEERING AGREEMENTS

A. ACCESS TO RECORDS—AUDIT

1. *Access clause.* After June 30, 1975, a construction grant for Steps 1, 2 or 3 will not be awarded nor will initiation of Step 1 work be approved under 40 CFR 35.917(e) or 35.925–18(a)(3), unless an acceptable records and access clause is included in the consulting engineering subagreement. The clause contained in appendix C–1 shall be used on or after March 1, 1976. The clause required by former PG–53 or approved as an alternate thereto may be used for all contracts under grants awarded before March 1, 1976.

2. *EPA exercise of right of access to records.* Under applicable statutory and regulatory provisions, EPA has a broad right of access to grantees' consulting engineers' records pertinent to performance of EPA project work. The extent to which EPA will exercise this right of access will depend upon the nature of the records and upon the type of agreement.

a. In order to determine where EPA shall exercise its right of access, engineers' project-related records have been divided into three categories:

(1) *Category A:* Records that pertain directly to the professional, technical and other services performed, excluding any type of financial records of the consulting engineer.

(2) *Category B:* Financial records of the consulting engineer pertaining to the direct costs of professional, technical and other services performed, excluding financial records pertaining to profit and overhead or other indirect costs.

(3) *Category C:* Financial records of the consulting engineer excluded from category B.

b. In all cases, EPA will exercise its right of access to Category A records. Also, where there is an indication that fraud, gross abuse, or corrupt practices may be involved, EPA will exercise its right of access to records in all categories. Otherwise, access to consulting engineers' financial records (categories B and C) will depend principally upon the method(s) of compensation stipulated in the agreement:

(1) *Agreements based upon a percentage of construction cost.* Category B and C records will not be audited. However, terms of the agreement, including the total amount of compensation, will be evaluated for fairness, reasonableness, and consistency with historical and advisory guidelines in general use and acceptable locally. These guidelines include those in ASCE manual 45 or other analyses or data which the contracting parties relied on or used in negotiation of the agreement. Such evaluation shall also consider comparable contracts for which EPA grants have been awarded.

(2) *Agreements based upon salary cost times a multiplier including profit.* Category B records will be audited. Category C records will not be audited. However, terms of the agreement, including the total amount of compensation and the multiplier, will be evaluated for fairness and reasonableness and consistency with historical and advisory guidelines in general use and acceptable locally. These guidelines include those in ASCE manual 45 or other analyses or data which the contracting parties relied on or used in negotiation of the agreement. Such evaluation shall also consider comparable contracts for which EPA grants have been awarded. Items of overhead or other indirect costs will only

be audited to the extent necessary to assure that types of costs found both in overhead and reimbursable direct costs, if any, are properly charged.

(3) *Per diem agreements.* Category B records will be audited. Category C records will not be audited. Audit will be performed to the extent necessary to determine that hours claimed and classes of personnel used were properly supported. The per diem rates will be evaluated according to the appropriate portions of paragraphs A.2.b. (1) and (2) of this appendix.

(4) *Cost plus a fixed fee (profit).* All direct costs, overhead, and other indirect costs claimed will be audited to determine that they are reasonable, allowable, and properly supported by the consulting engineer's records. The amount of fixed fee will not be questioned unless the total compensation appears unreasonable when evaluated according to paragraphs A.2.b. (1) and (2) of this appendix.

(5) *Fixed price lump sum contracts.* Category B and C records will not be audited. The contract amount will not be questioned unless the total compensation appears unreasonable when evaluated in accordance with appropriate portions of paragraphs A.2.b. (1) and (2) of this appendix.

c. If an agreement covers both grant-eligible and ineligible work, access to records will be exercised to the extent necessary to allocate contract work or costs between work grant-eligible for title II construction grant assistance and ineligible work or costs.

d. Under agreements that use two or more methods of compensation, each part of the agreement will be separately audited according to the appropriate paragraph of paragraph (b)(2) of this section.

e. Any audited firm and the grantee will be afforded opportunity for an audit exit conference and an opportunity to receive and comment upon the pertinent portions of each draft audit report. The final audit report will include the written comments, if any, of the audited parties in addition to those of the appropriate State and/or Federal agency(ies).

B. TYPE OF CONTRACT

1. The percentage-of-construction-cost type of contract, and the multiplier contract, where the multiplier includes profit, may not be used for step 1 or step 2 work initiated after June 30, 1975, when the step 1 or step 2 grant is awarded after June 30, 1975. (A multiplier type of compensation may be used only under acceptable types of contracts; see 40 CFR 35.937–1(d).)

2. Step 1 and step 2 work performed under the percentage-of-construction-cost type of contract and the multiplier contract, where the multiplier includes profit, will be reimbursed and such contracts will not be questioned where such costs are reimbursed in conjunction with a step 3 grant award within the scope of step 2 work contracted for prior to July 1, 1975. However, the current step 2 work will not be continued indefinitely for multiple, subsequent step 3 projects in order to avoid modifying the consultant agreement.

3. Where step 2 work is initiated after June 30, 1975, under contracts prohibited by paragraphs B.1. and B.2. of this appendix, EPA approval may not be given nor grant assistance awarded until the contract's terms of compensation have been renegotiated.

4. Establishing an ''upset'' figure (an upper limit which cannot be exceeded without a formal amendment to the agreement) under a multiplier contract, where the multiplier includes profit, is not acceptable where renegotiation of such contracts is required. In such renegotiation, the amount of profit must be specifically identified.

5. Total allowable contract costs for grant payment for a contract based on a percentage-of-construction-cost will be based on the following:

a. Where work for the design step is essentially continuous from start of design to bidding, and bid opening for step 3 construction occurs within 1 year after substantial completion of step 2 design work, the total allowable contract costs for grant payment may not exceed an amount based upon the low, responsive, responsible bid for construction.

b. Where work for the design step is not essentially continuous from start of design to bidding, or 1 year or more elapses between substantial completion of step 2 design work and bid opening for step 3 construction, the total allowable contract costs for grant payment may not exceed an amount based upon the lower of:

(1) The consulting engineer's construction cost estimate provided at the time of such substantial completion plus an escalation of this construction cost estimate of up to 5 percent, but not to exceed the consulting engineer's total compensation based on the low, responsive, responsible bid for construction, or

(2) The consulting engineer's construction cost estimate provided at the time of such substantial completion plus a consulting engineer's compensation esclation not to exceed $50,000, but not to exceed the consulting engineer's total compensation based upon the low, responsive, responsible bid for construction.

c. Where the low, responsive, responsible bid for construction would have resulted in a higher consulting engineer's total compensation than paragraph b. of this clause, provides, the Regional Administrator may also consider a reasonable additional compensation for updating the plans and specifications, revising cost estimates, or similar services.

d. The limitations of paragraph B5 apply to all grants awarded under subpart E except that—

(1) If the Regional Administrator had made final payment on a project before December 17, 1975, the limitations do not apply; and

(2) For other projects on which construction for the building and erection of a treatment works was initiated prior to December 17, 1975, the limitations do not apply to any request for engineering fee increases attributable to construction contract awards or change orders approved by the grantee prior to December 17, 1975.

6. Where renegotiation is required under this appendix D, such renegotiation is subject to 40 CFR 35.937–1, 35.937–6, 35.937–7, 35.937–9, and 35.937–10.

C. ANNOUNCEMENT AND SELECTION

The requirements of 40 CFR 35.937–2 through 35.937–4 shall not apply to step 1 work where the step 1 grant was awarded or the initiation of step 1 work was approved by EPA (under 40 CFR 35.917(e)) before March 1, 1976, nor to subsequent step 2 and step 3 work in accordance with 40 CFR 35.937–2(d), if the grantee is satisfied with the qualifications and performance of the engineer employed.

D. REQUIRED CONSULTING ENGINEERING PROVISIONS

Effective March 1, 1976, the subagreement clauses required under appendix C–1 must be included in the consulting engineering subagreement before grant assistance for step 1, 2 or 3 will be awarded and before initiation of step 1 work will be approved under 40 CFR 35.917(e) or 35.925–18(a) 3.

E. ENFORCEMENT

1. Refusal by a consulting engineer to insert the required access clause, or to allow access to its records, or to renegotiate a consulting engineering contract according to the foregoing requirements, will render costs incurred under such contract unallowable. Accordingly, all such costs will be questioned and disallowed pending compliance with this appendix.

2. Where the Regional Administrator determines that the time required to comply with the access to records and type of contract provisions of this appendix will unduly delay award of grant assistance, he may award the grant assistance conditioned upon compliance with this appendix within a specified period of time. In such event, no grant payments for the affected engineering work may be made until such compliance has been obtained.

APPENDIX E—INNOVATIVE AND ALTERNATIVE TECHNOLOGY GUIDELINES

1. *Purpose.* These guidelines provide the criteria for identifying and evaluating innovative and alternative waste water treatment processes and techniques. The Administrator may publish additional information.

2. *Authority.* These guidelines are provided under section 304(d)(3) of the Clean Water Act.

3. *Applicability.* These guidelines apply to:

a. The analysis of innovative and alternative treatment processes and techniques under §35.917–1(d)(8);

b. Increased grants for eligible treatment works under §§35.930–5 (b) and (c) and 35.908(b)(1);

c. The funding available for innovative and alternative processes and techniques under §35.915–1(b);

d. The funding available for alternatives to conventional treatment works for small communities under §35.915–1(e);

e. The cost-effectiveness preference given innovative and alternative processes and techniques in section 7 of appendix A to this subpart;

f. The treatment works that may be given higher priority on State project priority lists under §35.915(a)(1)(iii);

g. Alternative and innovative treatment systems in connection with Federal facilities;

h. Individual systems authorized by §35.918, as modified in that section to include unconventional or innovative sewers;

i. The access and reports conditions in §35.935–20.

4. *Alternative processes and techniques.* Alternative waste water treatment processes and techniques are proven methods which provide for the reclaiming and reuse of water, productively recycle waste water constituents or otherwise eliminate the discharge of pollutants, or recover energy.

a. In the case of processes and techniques for the treatment of effluents, these include land treatment, aquifer recharge, aquaculture, silviculture, and direct reuse for industrial and other nonpotable purposes, horticulture and revegetation of disturbed land. Total containment ponds and ponds for the treatment and storage of waste water prior to land application and other processes necessary to provide minimum levels of preapplication treatment are considered to be part of alternative technology systems for the purpose of this section.

b. For sludges, these include land application for horticultural, silvicultural, or agricultural purposes (including supplemental processing by means such as composting or drying), and revegetation of disturbed lands.

c. Energy recovery facilities include codisposal measures for sludge and refuse which

produce energy; anaerobic digestion facilities *(Provided,* That more than 90 percent of the methane gas is recovered and used as fuel); and equipment which provides for the use of digester gas within the treatment works. Self-sustaining incineration may also be included provided that the energy recovered and productively used is greater than the energy consumed to dewater the sludge to an autogenous state.

d. Also included are individual and other onsite treatment systems with subsurface or other means of effluent disposal and facilities constructed for the specific purpose of septage treatment.

e. The term ''alternative'' as used in these guidelines includes the terms ''unconventional'' and ''alternative to conventional'' as used in the Act.

f. The term ''alternative'' does not include collector sewers, interceptors, storm or sanitary sewers or the separation thereof; or major sewer rehabilitation, except insofar as they are alternatives to conventional treatment works for small communities under §35.915–1(e) or part of individual systems under §35.918.

5. *Innovative processes and techniques.* Innovative waste water treatment processes and techniques are developed methods which have not been fully proven under the circumstances of their contemplated use and which represent a significant advancement over the state of the art in terms of meeting the national goals of cost reduction, increased energy conservation or recovery, greater recycling and conservation of water resources (including preventing the mixing of pollutants with water), reclamation or reuse of effluents and resources (including increased productivity of arid lands), improved efficiency and/or reliability, the beneficial use of sludges or effluent constituents, better management of toxic materials or increased environmental benefits. For the purpose of these guidelines, innovative waste water treatment processes and techniques are generally limited to new and improved applications of those alternative processes and techniques identified in accordance with paragraph 4 of these guidelines, including both treatment at centralized facilities and individual and other onsite treatment. Treatment processes based on the conventional concept of treatment (by means of biological or physical/chemical unit processes) and discharge to surface waters shall not be considered innovative waste water treatment processes and techniques except where it is demonstrated that these processes and techniques, as a minimum, meet either the cost-reduction or energy-reduction criterion described in section 6 of these guidelines. Treatment and discharge systems include primary treatment, suspended-growth or fixed-growth biological systems for secondary or advance waste water treatment, physical/chemical treatment, disinfection, and sludge processing. The term ''innovative'' does not include collector sewers, interceptors, storm or sanitary sewers or the separation of them, or major sewer rehabilitation, except insofar as they meet the criteria in paragraph 6 of these guidelines and are alternatives to conventional treatment works for small communities under §35.915–1(e) or part of individual systems under §35.918.

6. *Criteria for determining innovative processes and techniques.* a. The Regional Administrator will use the following criteria in determining whether a waste water treatment process or technique is innovative. The criteria should be read in the context of paragraph 5. These criteria do not necessarily preclude a determination by the Regional Administrator that a treatment system is innovative because of local variations in geographic or climatic conditions which affect treatment plant design and operation or because it achieves significant public benefits through the advancement of technology which would otherwise not be possible. The Regional Administrator should consult with EPA headquarters about determinations made in other EPA regions on similar processes and techniques.

b. New or improved applications of alternative waste water treatment processes and techniques may be innovative for the purposes of this regulation if they meet one or more of the criteria in paragraphs e(1) through e(6) of this paragraph. Treatment and discharge systems (i.e., systems which are not new or improved applications of alternative waste water treatment processes and techniques in accordance with paragraph 4 of these guidelines) must meet the criteria of either paragraph 6e(1) or 6e(2), as a minimum, in order to be innovative for the purposes of these guidelines.

c. These six criteria are essentially the same as those used to evaluate any project proposed for grant assistance. The principal difference is that some newly developed processes and techniques may have the potential to provide significant advancements in the state of the art with respect to one or more of these criteria. Inherent in the concept of advancement of technology is a degree of risk which is necessary to initially demonstrate a method on a full, operational scale under the circumstances of its contemplated use. This risk, while recognized to be a necessary element in the implementation of innovative technology, must be minimized by limiting the projects funded to those which have been fully developed and shown to be feasible through operation on a smaller scale. The risk must also be commensurate with the potential benefits (i.e., greater potential benefits must be possible in the case of innovative technology projects where greater risk is involved).

d. Increased Federal funding under § 35.908(b) may be made only from the reserve in § 35.915–1(b). The Regional Administrator may fund a number of projects using the same type of innovative technology if he desires to encourage certain innovative processes and techniques because the potential benefits are great in comparison to the risks, or if operation under differing conditions of climatic, geology, etc., is desirable to demonstrate the technology.

e. The Regional Administrator will use the following criteria to determine whether waste water treatment processes and techniques are innovative:

(1) The life cycle cost of the eligible portion of the treatment works excluding conventional sewer lines is at least 15 percent less than that for the most cost-effective alternative which does not incorporate innovative waste water treatment processes and techniques (i.e., is no more than 85 percent of the life cycle cost of the most cost-effective noninnovative alternative).

(2) The net primary energy requirements for the operation of the eligible portion of the treatment works excluding conventional sewer lines are at least 20 percent less than the net energy requirements of the least net energy alternative which does not incorporate innovative waste water treatment processes and techniques (i.e., the net energy requirements are no more than 80 percent of those for the least net energy noninnovative alternative). The least net energy noninnovative alternative must be one of the alternatives selected for analysis under section 5 of appendix A.

(3) The operational reliability of the treatment works is improved in terms of decreased susceptibility to upsets or interference, reduced occurrence of inadequately treated discharges and decreased levels of operator attention and skills required.

(4) The treatment works provides for better management of toxic materials which would otherwise result in greater environmental hazards.

(5) The treatment works results in increased environmental benefits such as water conservation, more effective land use, improved air quality, improved ground water quality, and reduced resource requirements for the construction and operation of the works.

(6) The treatment works provide for new or improved methods of joint treatment and management of municipal and industrial wastes that are discharged into municipal systems.

[43 FR 44049, Sept. 27, 1978, as amended at 44 FR 37596, June 27, 1979; 44 FR 39340, July 5, 1979]

Subparts F–G—[Reserved]

Subpart H—Cooperative Agreements for Protecting and Restoring Publicly Owned Freshwater Lakes

AUTHORITY: Sections 314, 501 and 518, Clean Water Act (86 Stat. 816, 33 U.S.C. 1251 *et seq.*).

SOURCE: 45 FR 7792, Feb. 5, 1980, unless otherwise noted.

§ 35.1600 Purpose.

This subpart supplements the EPA general grant regulations and procedures (part 31 of this chapter) and establishes policies and procedures for cooperative agreements to assist States and Indian tribes treated as States in carrying out approved methods and procedures for restoration (including protection against degradation) of publicly owned freshwater lakes.

[45 FR 7792, Feb. 5, 1980, as amended at 54 FR 14359, Apr. 11, 1989]

§ 35.1603 Summary of clean lakes assistance program.

(a) Under section 314 of the Clean Water Act, EPA may provide financial assistance to States to implement methods and procedures to protect and restore publicly owned freshwater lakes. Although cooperative agreements may be awarded only to States, these regulations allow States, through substate agreements, to delegate some or all of the required work to substate agencies.

(b) Only projects that deal with publicly owned freshwater lakes are eligible for assistance. The State must have assigned a priority to restore the lake, and the State must certify that the lake project is consistent with the State Water Quality Management Plan (§ 35.1521) developed under the State/EPA Agreement. The State/EPA Agreement is a mechanism for EPA Regional Administrators and States to coordinate a variety of programs under the Clean Water Act, the Resource Conservation and Recovery Act, the Safe Drinking Water Act and other laws administered by EPA.

(c) These regulations provide for Phase 1 and 2 cooperative agreements.

The purpose of a Phase 1 cooperative agreement is to allow a State to conduct a diagnostic-feasibility study to determine a lake's quality, evaluate possible solutions to existing pollution problems, and recommend a feasible program to restore or preserve the quality of the lake. A Phase 2 cooperative agreement is to be used for implementing recommended methods and procedures for controlling pollution entering the lake and restoring the lake. EPA award of Phase 1 assistance does not obligate EPA to award Phase 2 assistance for that project. Additionally, a Phase 1 award is not a prerequisite for receiving a Phase 2 award. However, a Phase 2 application for a proposed project that was not evaluated under a Phase 1 project shall contain the information required by appendix A.

(d) EPA will evaluate all applications in accordance with the application review criteria of § 35.1640–1. The review criteria include technical feasibility, public benefit, reasonableness of proposed costs, environmental impact, and the State's priority ranking of the lake project.

(e) Before awarding funding assistance, the Regional Administrator shall determine that pollution control measures in the lake watershed authorized by section 201, included in an approved 208 plan, or required by section 402 of the Act are completed or are being implemented according to a schedule that is included in an approved plan or discharge permit. Clean lakes funds may not be used to control the discharge of pollutants from a point source where the cause of pollution can be alleviated through a municipal or industrial permit under section 402 of the Act or through the planning and construction of wastewater treatment facilities under section 201 of the Act.

§ 35.1605 Definitions.

The terms used in this subpart have the meanings defined in sections 502 and 518(h) of the Act. In addition, the following terms shall have the meaning set forth below.

[45 FR 7792, Feb. 5, 1980, as amended at 54 FR 14359, Apr. 11, 1989]

§ 35.1605–1 The Act.

The Clean Water Act, as amended (33 U.S.C. 1251 *et seq.*).

§ 35.1605–2 Freshwater lake.

Any inland pond, reservoir, impoundment, or other similar body of water that has recreational value, that exhibits no oceanic and tidal influences, and that has a total dissolved solids concentration of less than 1 percent.

§ 35.1605–3 Publicly owned freshwater lake.

A freshwater lake that offers public access to the lake through publicly owned contiguous land so that any person has the same opportunity to enjoy nonconsumptive privileges and benefits of the lake as any other person. If user fees are charged for public use and access through State or substate operated facilities, the fees must be used for maintaining the public access and recreational facilities of this lake or other publicly owned freshwater lakes in the State, or for improving the quality of these lakes.

§ 35.1605–4 Nonpoint source.

Pollution sources which generally are not controlled by establishing effluent limitations under sections 301, 302, and 402 of the Act. Nonpoint source pollutants are not traceable to a discrete identifiable origin, but generally result from land runoff, precipitation, drainage, or seepage.

§ 35.1605–5 Eutrophic lake.

A lake that exhibits any of the following characteristics: (a) Excessive biomass accumulations of primary producers; (b) rapid organic and/or inorganic sedimentation and shallowing; or (c) seasonal and/or diurnal dissolved oxygen deficiencies that may cause obnoxious odors, fish kills, or a shift in the composition of aquatic fauna to less desirable forms.

§ 35.1605–6 Trophic condition.

A relative description of a lake's biological productivity based on the availability of plant nutrients. The range of trophic conditions is characterized by the terms of oligotrophic for the least

biologically productive, to eutrophic for the most biologically productive.

§ 35.1605–7 Desalinization.

Any mechanical procedure or process where some or all of the salt is removed from lake water and the freshwater portion is returned to the lake.

§ 35.1605–8 Diagnostic-feasibility study.

A two-part study to determine a lake's current condition and to develop possible methods for lake restoration and protection.

(a) The diagnostic portion of the study includes gathering information and data to determine the limnological, morphological, demographic, socio-economic, and other pertinent characteristics of the lake and its watershed. This information will provide recipients an understanding of the quality of the lake, specifying the location and loading characteristics of significant sources polluting the lake.

(b) The feasibility portion of the study includes: (1) Analyzing the diagnostic information to define methods and procedures for controlling the sources of pollution; (2) determining the most energy and cost efficient procedures to improve the quality of the lake for maximum public benefit; (3) developing a technical plan and milestone schedule for implementing pollution control measures and in-lake restoration procedures; and (4) if necessary, conducting pilot scale evaluations.

§ 35.1605–9 Indian Tribe set forth at 40 CFR 130.6(d).

A Tribe meeting the requirements set forth at 40 CFR 130.6(d).

[54 FR 14359, Apr. 11, 1989, as amended at 56 FR 13817, Mar. 23, 1994]

§ 35.1610 Eligibility.

EPA shall award cooperative agreements for restoring publicly owned freshwater lakes only to the State agency designated by the State's Chief Executive. The award will be for projects which meet the requirements of this subchapter.

§ 35.1613 Distribution of funds.

(a) For each fiscal year EPA will notify each Regional Administrator of the amount of funds targeted for each Region through annual clean lakes program guidance. To assure an equitable distribution of funds the targeted amounts will be based on the clean lakes program which States identify in their State WQM work programs.

(b) EPA may set aside up to twenty percent of the annual appropriations for Phase 1 projects.

§ 35.1615 Substate agreements.

States may make financial assistance available to substate agencies by means of a written interagency agreement transferring project funds from the State to those agencies. The agreement shall be developed, administered and approved in accordance with the provisions of 40 CFR 33.240 (Intergovernmental agreements). A State may enter into an agreement with a substate agency to perform all or a portion of the work under a clean lakes cooperative agreement. Recipients shall submit copies of all interagency agreements to the Regional Administrator. If the sum involved exceeds $100,000, the agreement shall be approved by the Regional Administrator before funds are released by the State to the substate agency. The agreement shall incorporate by reference the provisions of this subchapter. The agreement shall specify outputs, milestone schedule, and the budget required to perform the associated work in the same manner as the cooperative agreement between the State and EPA.

§ 35.1620 Application requirements.

(a) EPA will process applications in accordance with subpart B of part 30 of this subchapter. Applicants for assistance under the clean lakes program shall submit EPA form 5700–33 (original with signature and two copies) to the appropriate EPA Regional Office (see 40 CFR 30.130).

(b) Before applying for assistance, applicants should contact the appropriate Regional Administrator to determine EPA's current funding capability.

§ 35.1620–1 Types of assistance.

EPA will provide assistance in two phases in the clean lakes program.

(a) *Phase 1—Diagnostic-feasibility studies.* Phase 1 awards of up to $100,000 per award (requiring a 30 percent non-Federal share) are available to support diagnostic-feasibility studies (see appendix A).

(b) *Phase 2—Implementation.* Phase 2 awards (requiring a 50 percent non-Federal share) are available to support the implementation of pollution control and/or in-lake restoration methods and procedures including final engineering design.

(c) *Indian Tribes, eligible Indian Tribe.* In either phase, the Regional Administrator may increase the 50 and 70 percent maximum Federal share for an eligible Indian Tribe based upon application and demonstration by the Tribe that it does not have adequate funds (including Federal funds authorized by statute to be used for matching purposes, tribal funds or in-kind contributions to meet the required match). In no case shall the Federal share be greater than 90 percent.

[45 FR 7792, Feb. 5, 1980, as amended at 54 FR 14359, Apr. 11, 1989; 59 FR 13817, Mar. 23, 1994]

§ 35.1620–2 Contents of applications.

(a) All applications shall contain a written State certification that the project is consistent with State Water Quality Management work program (see § 35.1513 of this subchapter) and the State Comprehensive Outdoor Recreation Plan (if completed). Additionally, the State shall indicate the priority ranking for the particular project (see § 35.1620–5).

(b) Phase 1 applications shall contain: (1) A narrative statement describing the specific procedures that will be used by the recipient to conduct the diagnostic-feasibility study including a description of the public participation to be involved (see § 25.11 of this chapter);

(2) A milestone schedule;

(3) An itemized cost estimate including a justification for these costs;

(4) A written certification from the appropriate areawide or State 208 planning agency that the proposed work will not duplicate work completed under any 208 planning grant, and that the applicant is proposing to use any applicable approved 208 planning in the clean lakes project design; and

(5) For each lake being investigated, the information under paragraph (5)(i) of this paragraph (b) and, when available, the information under paragraph (5)(ii) of this paragraph (b).

(i) Mandatory information.

(A) The legal name of the lake, reservoir, or pond.

(B) The location of the lake within the State, including the latitude and longitude, in degrees, minutes, and seconds of the approximate center of the lake.

(C) A description of the physical characteristics of the lake, including its maximum depth (in meters); its mean depth (in meters); its surface area (in hectares); its volume (in cubic meters); the presence or absence of stratified conditions; and major hydrologic inflows and outflows.

(D) A summary of available chemical and biological data demonstrating the past trends and current water quality of the lake.

(E) A description of the type and amount of public access to the lake, and the public benefits that would be derived by implementing pollution control and lake restoration procedures.

(F) A description of any recreational uses of the lake that are impaired due to degraded water quality. Indicate the cause of the impairment, such as algae, vascular aquatic plants, sediments, or other pollutants.

(G) A description of the local interests and fiscal resources committed to restoring the lake.

(H) A description of the proposed monitoring program to provide the information required in appendix A paragraph (a)(10) of this section.

(ii) Discretionary information. States should submit this information when available to assist EPA in reviewing the application.

(A) A description of the lake watershed in terms of size, land use (list each major land use classification as a percentage of the whole), and the general topography, including major soil types.

(B) An identification of the major point source pollution discharges in

the watershed. If the sources are currently controlled under the National Pollutant Discharge Elimination System (NPDES), include the permit numbers.

(C) An estimate of the percent contribution of total nutrient and sediment loading to the lake by the identified point sources.

(D) An indication of the major nonpoint sources in the watershed. If the sources are being controlled describe the control practice(s), including best land management practices.

(E) An indication of the lake restoration measures anticipated, including watershed management, and a projection of the net improvement in water quality.

(F) A statement of known or anticipated adverse environmental impacts resulting from lake restoration.

(c) Phase 2 applications shall include: (1) The information specified in Appendix A in a diagnostic/feasibility study or its equivalent; (2) certification by the appropriate areawide or State 208 planning agencies that the proposed Phase 2 lake restoration proposal is consistent with any approved 208 planning; and (3) copies of all issued permits or permit applications (including a summary of the status of applications) that are required for the discharge of dredged or fill material under section 404 of the Act.

§ 35.1620–3 Environmental evaluation.

Phase 2 applicants shall submit an evaluation of the environmental impacts of the proposed project in accordance with the requirements in Appendix A of this regulation.

§ 35.1620–4 Public participation.

(a) *General.* (1) In accordance with this part and part 25 of this chapter, the applicant shall provide for, encourage, and assist public participation in developing a proposed lake restoration project.

(2) Public consultation may be coordinated with related activities to enhance the economy, the effectiveness, and the timeliness of the effort, or to enhance the clarity of the issue. This procedure shall not discourage the widest possible participation by the public.

(b) *Phase 1.* (1) Phase 1 recipients shall solicit public comment in developing, evaluating, and selecting alternatives; in assessing potential adverse environmental impacts; and in identifying measures to mitigate any adverse impacts that were identified. The recipient shall provide information relevant to these decisions, in fact sheet or summary form, and distribute them to the public at least 30 days before selecting a proposed method of lake restoration. Recipients shall hold a formal or informal meeting with the public after all pertinent information is distributed, but before a lake restoration method is selected. If there is significant public interest in the cooperative agreement activity, an advisory group to study the process shall be formed in accordance with the requirements of § 25.3(d)(4) of this chapter.

(2) A formal public hearing shall be held if the Phase 1 recipient selects a lake restoration method that involves major construction, dredging, or significant modifications to the environment, or if the recipient or the Regional Administrator determines that a hearing would be beneficial.

(c) *Phase 2.* (1) A summary of the recipient's response to all public comments, along with copies of any written comments, shall be prepared and submitted to EPA with a Phase 2 application.

(2) Where a proposed project has not been studied under a Phase 1 cooperative agreement, the applicant for Phase 2 assistance shall provide an opportunity for public consultation with adequate and timely notices before submitting an application to EPA. The public shall be given the opportunity to discuss the proposed project, the alternatives, and any potentially adverse environmental impacts. A public hearing shall be held where the proposed project involves major construction, dredging or other significant modification of the environment. The applicant shall provide a summary of his responses to all public comments and submit the summary, along with copies of any written comments, with the application.

§ 35.1620–5 State work programs and lake priority lists.

(a)(1) A State shall submit to the Regional Administrator as part of its annual work program (§ 35.1513 of this subchapter) a description of the activities it will conduct during the Federal fiscal year to classify its lakes according to trophic condition (§ 35.1630) and to set priorities for implementing clean lakes projects within the State. The work plan must list in priority order the cooperative agreement applications that will be submitted by the State for Phase 1 and Phase 2 projects during the upcoming fiscal year, along with the rationale used to establish project priorities. Each State must also list the cooperative agreement applications, with necessary funding, which it expects to submit in the following fiscal year. This information will assist EPA in targeting resources under § 35.1613.

(2) A State may petition the Regional Administrator by letter to modify the EPA approved priority list established under paragraph (a)(1) of this section. This may be done at any time if the State believes there is sufficient justification to alter the priority list contained in its annual work program, e.g., if a community with a lower priority project has sufficient resources available to provide the required matching funding while a higher priority project does not, or if new data indicates that a lower priority lake will have greater public benefit than a higher priority lake.

(b) Clean lakes restoration priorities should be consistent with the Statewide water quality management strategy (see § 35.1511–2 of this subchapter). In establishing priorities on particular lake restoration projects, States should use as criteria the application review criteria (§ 35.1640–1) that EPA will use in preparing funding recommendations for specific projects. If a State chooses to use different criteria, the State should indicate this to the Regional Administrator as part of the annual work program.

§ 35.1620–6 Intergovernmental review.

EPA will not award funds under this subpart without review and consultation in accordance with the requirements of Executive Order 12372, as implemented in 40 CFR part 29 of this chapter.

[48 FR 29302, June 24, 1983]

§ 35.1630 State lake classification surveys.

States that wish to participate in the clean lakes program shall establish and submit to EPA by January 1, 1982, a classification, according to trophic condition, of their publicly owned freshwater lakes that are in need of restoration or protection. After December 31, 1981, States that have not complied with this requirement will not be eligible for Federal financial assistance under this subpart until they complete their survey.

§ 35.1640 Application review and evaluation.

EPA will review applications as they are received. EPA may request outside review by appropriate experts to assist with technical evaluation. Funding decisions will be based on the merit of each application in accordance with the application review criteria under § 35.1640–1. EPA will consider Phase 1 applications separately from Phase 2 applications.

§ 35.1640–1 Application review criteria.

(a) When evaluating applications, EPA will consider information supplied by the applicant which address the following criteria:

(1) The technical feasibility of the project, and where appropriate, the estimated improvement in lake water quality.

(2) The anticipated positive changes that the project would produce in the overall lake ecosystem, including the watershed, such as the net reduction in sediment, nutrient, and other pollutant loadings.

(3) The estimated improvement in fish and wildlife habitat and associated beneficial effects on specific fish populations of sport and commercial species.

(4) The extent of anticipated benefits to the public. EPA will consider such factors as

(i) The degree, nature and sufficiency of public access to the lake;

(ii) The size and economic structure of the population residing near the lake which would use the improved lake for recreational and other purposes;

(iii) The amount and kind of public transportation available for transport of the public to and from the public access points;

(iv) Whether other relatively clean publicly owned freshwater lakes within 80 kilometer radius already adequately serve the population; and

(v) Whether the restoration would benefit primarily the owners of private land adjacent to the lake.

(5) The degree to which the project considers the ''open space'' policies contained in sections 201(f), 201(g), and 208(b)(2)(A) of the Act.

(6) The reasonableness of the proposed costs relative to the proposed work, the likelihood that the project will succeed, and the potential public benefits.

(7) The means for controlling adverse environmental impacts which would result from the proposed restoration of the lake. EPA will give specific attention to the environmental concerns listed in section (c) of Appendix A.

(8) The State priority ranking for a particular project.

(9) The State's operation and maintenance program to ensure that the pollution control measures and/or in-lake restorative techniques supported under the project will be continued after the project is completed.

(b) For Phase 1 applications, the review criteria presented in paragraph (a) of this section will be modified in relation to the smaller amount of technical information and analysis that is available in the application. Specifically, under criterion (a)(1), EPA will consider a technical assessment of the proposed project approach to meet the requirements stated in Appendix A to this regulation. Under criterion (a)(4), EPA will consider the degree of public access to the lake and the public benefit. Under criterion (a)(7), EPA will consider known or anticipated adverse environmental impacts identified in the application or that EPA can presume will occur. Criterion (a)(9) will not be considered.

§35.1650 Award.

(a) Under 40 CFR 30.345, generally 90 days after EPA has received a complete application, the application will either be: (1) Approved for funding in an amount determined to be appropriate for the project; (2) returned to the applicant due to lack of funding; or (3) disapproved. The applicant shall be promptly notified in writing by the EPA Regional Administrator of any funding decisions.

(b) Applications that are disapproved can be submitted as new applications to EPA if the State resolves the issues identified during EPA review.

§35.1650–1 Project period.

(a) The project period for Phase 1 projects shall not exceed three years.

(b) The project period for Phase 2 projects shall not exceed four years. Implementation of complex projects and projects incorporating major construction may have longer project periods if approved by the Regional Administrator.

§35.1650–2 Limitations on awards.

(a) Before awarding assistance, the Regional Administrator shall determine that:

(1) The applicant has met all of the applicable requirements of §35.1620 and §35.1630; and

(2) State programs under section 314 of the Act are part of a State/EPA Agreement which shall be completed before the project is awarded.

(b) Before awarding Phase 2 projects, the Regional Administrator shall further determine that:

(1) When a Phase 1 project was awarded, the final report prepared under Phase 1 is used by the applicant to apply for Phase 2 assistance. The lake restoration plan selected under the Phase 1 project must be implemented under a Phase 2 cooperative agreement.

(2) Pollution control measures in the lake watershed authorized by section 201, included in an approved 208 plan, or required by section 402 of the Act have been completed or are being implemented according to a schedule that is included in an approved plan or discharge permit.

(3) The project does not include costs for controlling point source discharges of pollutants where those sources can be alleviated by permits issued under section 402 of the Act, or by the planning and construction of wastewater treatment facilities under section 201 of the Act.

(4) The State has appropriately considered the ''open space'' policy presented in sections 201(f), 201(g)(6), and 208(b)(2)(A) of the Act in any wastewater management activities being implemented by them in the lake watershed.

(5)(i) The project does not include costs for harvesting aquatic vegetation, or for chemical treatment to alleviate temporarily the symptoms of eutrophication, or for operating and maintaining lake aeration devices, or for providing similar palliative methods and procedures, unless these procedures are the most energy efficient or cost effective lake restorative method.

(ii) Palliative approaches can be supported only where pollution in the lake watershed has been controlled to the greatest practicable extent, and where such methods and procedures are a necessary part of a project during the project period. EPA will determine the eligibility of such a project, based on the applicant's justification for the proposed restoration, the estimated time period for improved lake water quality, and public benefits associated with the restoration.

(6) The project does not include costs for desalinization procedures for naturally saline lakes.

(7) The project does not include costs for purchasing or long term leasing of land used solely to provide public access to a lake.

(8) The project does not include costs resulting from litigation against the recipient by EPA.

(9) The project does not include costs for measures to mitigate adverse environmental impacts that are not identified in the approved project scope of work. (EPA may allow additional costs for mitigation after it has reevaluated the cost-effectiveness of the selected alternative and has approved a request for an increase from the recipient.)

§ 35.1650–3 Conditions on award.

(a) *All awards.* (1) All assistance awarded under the Clean Lakes program is subject to the EPA General Grant conditions (subpart C and appendix A of part 30 of this chapter).

(2) For each clean lakes project the State agrees to pay or arrange the payment of the non-Federal share of the project costs.

(b) *Phase 1.* Phase 1 projects are subject to the following conditions:

(1) The recipient must receive EPA project officer approval on any changes to satisfy the requirements of paragraph (a)(10) of appendix A before undertaking any other work under the grant.

(2)(i) Before selecting the best alternative for controlling pollution and improving the lake, as required in paragraph (b)(1) of appendix A of this regulation, and before undertaking any other work stated under paragraph (b) of appendix A, the recipient shall submit an interim report to the project officer. The interim report must include a discussion of the various available alternatives and a technical justification for the alternative that the recipient will probably choose. The report must include a summary of the public involvement and the comments that occurred during the development of the alternatives.

(ii) The recipient must obtain EPA project officer approval of the selected alternative before conducting additional work under the project.

(c) *Phase 2.* Phase 2 projects are subject to the following conditions:

(1)(i) The State shall monitor the project to provide data necessary to evaluate the efficiency of the project as jointly agreed to and approved by the EPA project officer. The monitoring program described in paragraph (b)(3) of appendix A of this regulation as well as any specific measurements that would be necessary to assess specific aspects of the project, must be considered during the development of a monitoring program and schedule. The project recipient shall receive the approval of the EPA project officer for a monitoring program and schedule to satisfy the requirements of appendix A paragraph (b)(3) before undertaking any other work under the project.

(ii) Phase 2 projects shall be monitored for at least one year after construction or pollution control practices are completed.

(2) The State shall manage and maintain the project so that all pollution control measures supported under the project will be continued during the project period at the same level of efficiency as when they were implemented. The State will provide reports regarding project maintenance as required in the cooperative agreement.

(3) The State shall upgrade its water quality standards to reflect a higher water quality use classification if the higher water quality use was achieved as a result of the project (see 40 CFR 35.1550(c)(2)).

(4) If an approved project allows purchases of equipment for lake maintenance, such as weed harvesters, aeration equipment, and laboratory equipment, the State shall maintain and operate the equipment according to an approved lake maintenance plan for a period specified in the cooperative agreement. In no case shall that period be for less than the time it takes to completely amortize the equipment.

(5) If primary adverse environmental impacts result from implementing approved lake restoration or protection procedures, the State shall include measures to mitigate these adverse impacts at part of the work under the project.

(6) If adverse impacts could result to unrecorded archeological sites, the State shall stop work or modify work plans to protect these sites in accordance with the National Historic Preservation Act. (EPA may allow additional costs for ensuring proper protection of unrecorded archeological sites in the project area after reevaluating the cost effectiveness of the procedures and approving a request for a cost increase from the recipient.)

(7) If a project involves construction or dredging that requires a section 404 permit for the discharge of dredged or fill material, the recipient shall obtain the necessary section 404 permits before performing any dredge or fill work.

§35.1650–4 Payment.

(a) Under §30.615 of this chapter, EPA generally will make payments through letter of credit. However, the Regional Administrator may place any recipient on advance payment or on cost reimbursement, as necessary.

(b) Phase 2 projects involving construction of facilities or dredging and filling activities shall be paid by reimbursement.

§35.1650–5 Allowable costs.

(a) The State will be paid under §35.1650–4 for the Federal share of all necessary costs within the scope of the approved project and determined to be allowable under 40 CFR 30.705, the provisions of this subpart, and the cooperative agreement.

(b) Costs for restoring lakes used solely for drinking water supplies are not allowable under the Clean Lakes Program.

§35.1650–6 Reports.

(a) States with Phase 1 projects shall submit semi-annual progress reports (original and one copy) to the EPA project officer within 30 days after the end of every other standard quarter. Standard quarters end on March 31, June 30, September 30, and December 31. These reports shall include the following:

(1) Work progress relative to the milestone schedule, and difficulties encountered during the previous six months.

(2) A brief discussion of the project findings appropriate to the work conducted during the previous six months.

(3) A report of expenditures in the past six months and those anticipated in the next six months.

(b) *Phase 2.* States with Phase 2 projects shall submit progress reports (original and one copy) according to the schedule established in the cooperative agreement. The frequency of Phase 2 project progress reports shall be determined by the size and complexity of the project, and shall be required no more frequently than quarterly. The Phase 2 progress report shall contain all of the information required for Phase 1 progress reports indicated in paragraph (a) of this section. This report also must include water quality

monitoring data and a discussion of the changes in water quality which appear to have resulted from the lake restoration activities implemented during the reporting period.

(c) *Final Report.* States shall prepare a final report for all grants in accordance with §30.635–2 of this subchapter. Phase 1 reports shall be organized according to the outline of information requirements stated in appendix A. All water quality data obtained under the grant shall be submitted in the final report. Phase 2 reports shall conform to the format presented in the EPA manual on ''Scientific and Technical Publications,'' May 14, 1974, as revised or updated. The States shall submit the report within 90 days after the project is completed.

(d) *Financial Status Report.* Within 90 days after the end of each budget period, the grantee shall submit to the Regional Administrator an annual report of all expenditures (Federal and non–Federal) which accrued during the budget period. Beginning in the second quarter of any succeeding budget period, payments may be withheld under §30.615–3 of this chapter until this report is received.

APPENDIX A—REQUIREMENTS FOR DIAGNOSTIC-FEASIBILITY STUDIES AND ENVIRONMENTAL EVALUATIONS

Phase 1 clean lakes projects shall include in their scope of work at least the following requirements, preferably in the order presented and under appropriate subheadings. The information required by paragraph (a)(10) and the monitoring procedures stated in paragraph (b)(3) of this Appendix may be modified to conform to specific project requirements to reduce project costs without jeopardizing adequacy of technical information or the integrity of the project. All modifications must be approved by the EPA project officer as specified in §§35.1650–3(b)(1) and 35.1650–3(c)(1).

(a) A diagnostic study consisting of:

(1) An identification of the lake to be restored or studied, including the name, the State in which it is located, the location within the State, the general hydrologic relationship to associated upstream and downstream waters and the approved State water quality standards for the lake.

(2) A geological description of the drainage basin including soil types and soil loss to stream courses that are tributary to the lake.

(3) A description of the public access to the lake including the amount and type of public transportation to the access points.

(4) A description of the size and economic structure of the population residing near the lake which would use the improved lake for recreation and other purposes.

(5) A summary of historical lake uses, including recreational uses up to the present time, and how these uses may have changed because of water quality degradation.

(6) An explanation, if a particular segment of the lake user population is or will be more adversely impacted by lake degradation.

(7) A statement regarding the water use of the lake compared to other lakes within a 80 kilometer radius.

(8) An itemized inventory of known point source pollution discharges affecting or which have affected lake water quality over the past 5 years, and the abatement actions for these discharges that have been taken, or are in progress. If corrective action for the pollution sources is contemplated in the future, the time period should be specified.

(9) A description of the land uses in the lake watershed, listing each land use classification as a percentage of the whole and discussing the amount of nonpoint pollutant loading produced by each category.

(10) A discussion and analysis of historical baseline limnological data and one year of current limnological data. The monitoring schedule presented in paragraph (b)(3) of Appendix A must be followed in obtaining the one year of current limnological data. This presentation shall include the present trophic condition of the lake as well as its surface area (hectares), maximum depth (meters), average depth (meters), hydraulic residence time, the area of the watershed draining to the lake (hectares), and the physical, chemical, and biological quality of the lake and important lake tributary waters. Bathymetric maps should be provided. If dredging is expected to be included in the restoration activities, representative bottom sediment core samples shall be collected and analyzed using methods approved by the EPA project officer for phosphorus, nitrogen, heavy metals, other chemicals appropriate to State water quality standards, and persistent synthetic organic chemicals where appropriate. Further, the elutriate must be subjected to test procedures developed by the U.S. Army Corps of Engineers and analyzed for the same constituents. An assessment of the phosphorus (and nitrogen when it is the limiting lake nutrient) inflows and outflows associated with the lake and a hydraulic budget including ground water flow must be included. Vertical temperature and dissolved oxygen data must be included for the lake to determine if the hypolimnion becomes anaerobic and, if so, for how long and over what extent of the bottom. Total and soluble reactive

phosphorus (P); and nitrite, nitrate, ammonia and organic nitrogen (N) concentrations must be determined for the lake. Chlorophyll *a* values should be measured for the upper mixing zone. Representative alkalinities should be determined. Algal assay bottle test data or total N to total P ratios should be used to define the growth limiting nutrient. The extent of algal blooms, and the predominant algal genera must be discussed. Algal biomass should be determined through algal genera identification, cell density counts (numbers of cells per milliliter) and converted to cell volume based on factors derived from direct measurements; and reported in biomass of each major genus identified. Secchi disk depth and suspended solids should be measured and reported. The portion of the shoreline and bottom that is impacted by vascular plants (submersed, floating, or emersed higher aquatic vegetation) must be estimated, specifically the lake surface area between 0 and the 10 meter depth contour or twice the Secchi disk transparency depth, whichever is less, and that estimate should include an identification of the predominant species. Where a lake is subject to significant public contact use or is fished for consumptive purposes, monitoring for public health reasons should be part of the monitoring program. Standard bacteriological analyses and fish flesh analyses for organic and heavy metal contamination should be included.

(11) An identification and discussion of the biological resources in the lake, such as fish population, and a discussion of the major known ecological relationships.

(b) A feasibility study consisting of:

(1) An identification and discussion of the alternatives considered for pollution control or lake restoration and an identification and justification of the selected alternative. This should include a discussion of expected water quality improvement, technical feasibility, and estimated costs of each alternative. The discussion of each feasible alternative and the selected lake restoration procedure must include detailed descriptions specifying exactly what activities would be undertaken under each, showing how and where these procedures would be implemented, illustrating the engineering specifications that would be followed including preliminary engineering drawings to show in detail the construction aspects of the project, and presenting a quantitative analysis of the pollution control effectiveness and the lake water quality improvement that is anticipated.

(2) A discussion of the particular benefits expected to result from implementing the project, including new public water uses that may result from the enhanced water quality.

(3) A Phase 2 monitoring program indicating the water quality sampling schedule. A limited monitoring program must be maintained during project implementation, particularly during construction phases or in-lake treatment, to provide sufficient data that will allow the State and the EPA project officer to redirect the project if necessary, to ensure desired objectives are achieved. During pre-project, implementation, and post-project monitoring activities, a single in-lake site should be sampled monthly during the months of September through April and biweekly during May through August. This site must be located in an area that best represents the limnological properties of the lake, preferably the deepest point in the lake. Additional sampling sites may be warranted in cases where lake basin morphometry creates distinctly different hydrologic and limnologic sub-basins; or where major lake tributaries adversely affect lake water quality. The sampling schedule may be shifted according to seasonal differences at various latitudes. The biweekly samples must be scheduled to coincide with the period of elevated biological activity. If possible, a set of samples should be collected immediately following spring turnover of the lake. Samples must be collected between 0800 and 1600 hours of each sampling day unless diel studies are part of the monitoring program. Samples must be collected between one-half meter below the surface and one-half meter off the bottom, and must be collected at intervals of every one and one-half meters, or at six equal depth intervals, whichever number of samples is less. Collection and analyses of all samples must be conducted according to EPA approved methods. All of the samples collected must be analyzed for total and soluble reactive phosphorus; nitrite, nitrate, ammonia, and organic nitrogen; pH; temperature; and dissolved oxygen. Representative alkalinities should be determined. Samples collected in the upper mixing zone must be analyzed for chlorophyll *a*. Algal biomass in the upper mixing zone should be determined through algal genera identification, cell density counts (number of cells per milliliter) and converted to cell volume based on factors derived from direct measurements; and reported in terms of biomass of each major genera identified. Secchi disk depth and suspended solids must be measured at each sampling period. The surface area of the lake covered by macrophytes between 0 and the 10 meter depth contour or twice the Secchi disk transparency depth, whichever is less, must be reported. The monitoring program for each clean lakes project must include all the required information mentioned above, in addition to any specific measurements that are found to be necessary to assess certain aspects of the project. Based on the information supplied by the Phase 2 project applicant and the technical evaluation of the proposal, a detailed monitoring program for Phase 2 will be established for each approved

project and will be a condition of the cooperative agreement. Phase 2 projects will be monitored for at least one year after construction or pollution control practices are completed to evaluate project effectiveness.

(4) A proposed milestone work schedule for completing the project with a proposed budget and a payment schedule that is related to the milestone.

(5) A detailed description of how non-Federal funds will be obtained for the proposed project.

(6) A description of the relationship of the proposed project to pollution control programs such as the section 201 construction grants program, the section 208 areawide wastewater management program, the Department of Agriculture Soil Conservation Service and Agriculture Stabilization and Conservation Service programs, the Department of Housing and Urban Development block grant program, the Department of Interior Heritage Conservation and Recreation Service programs and any other local, State, regional and Federal programs that may be related to the proposed project. Copies of any pertinent correspondence, contracts, grant applications and permits associated with these programs should be provided to the EPA project officer.

(7) A summary of public participation in developing and assessing the proposed project which is in compliance with part 25 of this chapter. The summary shall describe the matters brought before the public, the measures taken by the reporting agency to meet its responsibilities under part 25 and related provisions elsewhere in this chapter, the public response, and the agency's response to significant comments. Section 25.8 responsiveness summaries may be used to meet appropriate portions of these requirements to avoid duplication.

(8) A description of the operation and maintenance plan that the State will follow, including the time frame over which this plan will be operated, to ensure that the pollution controls implemented during the project are continued after the project is completed.

(9) Copies of all permits or pending permit applications (including the status of such applications) necessary to satisfy the requirements of section 404 of the Act. If the approved project includes dredging activities or other activities requiring permits, the State must obtain from the U.S. Army Corps of Engineers or other agencies the permits required for the discharge of dredged or fill material under section 404 of the Act or other Federal, State or local requirements. Should additional information be required to obtain these permits, the State shall provide it. Copies of section 404 permit applications and any associated correspondence must be provide to the EPA project officer at the time they are submitted to the U.S. Army Corps of Engineers. After reviewing the 404 permit application, the project officer may provide recommendations for appropriate controls and treatment of supernatant derived from dredged material disposal sites to ensure the maximum effectiveness of lake restoration procedures.

(c) States shall complete and submit an environmental evaluation which considers the questions listed below. In many cases the questions cannot be satisfactorily answered with a mere ''Yes'' or ''No''. States are encouraged to address other considerations which they believe apply to their project.

(1) Will the proposed project displace any people?

(2) Will the proposed project deface existing residences or residential areas? What mitigative actions such as landscaping, screening, or buffer zones have been considered? Are they included?

(3) Will the proposed project be likely to lead to a change in established land use patterns, such as increased development pressure near the lake? To what extent and how will this change be controlled through land use planning, zoning, or through other methods?

(4) Will the proposed project adversly affect a significant amount of prime agricultural land or agricultural operations on such land?

(5) Will the proposed project result in a significant adverse effect on parkland, other public land, or lands of recognized scenic value?

(6) Has the State Historical Society or State Historical Preservation Officer been contacted? Has he responded, and if so, what was the nature of that response? Will the proposed project result in a significant adversely effect on lands or structures of historic, architectural, archaeological or cultural value?

(7) Will the proposed project lead to a significant long-range increase in energy demands?

(8) Will the proposed project result in significant and long range adverse changes in ambient air quality or noise levels? Short term?

(9) If the proposed project involves the use of in-lake chemical treatment, what long and short term adverse effects can be expected from that treatment? How will the project recipient mitigate these effects?

(10) Does the proposal contain all the information that EPA requires in order to determine whether the project complies with Executive Order 11988 on floodplains? Is the proposed project located in a floodplain? If so, will the project involve construction of structures in the floodplain? What steps will be taken to reduce the possible effects of flood damage to the project?

(11) If the project involves physically modifying the lake shore or its bed or its watershed, by dredging, for example, what steps will be taken to minimize any immediate and long term adverse effects of such activities? When dredging is employed, where will the dredged material be deposited, what can be expected and what measures will the recipient employ to minimize any significant adverse impacts from its deposition?

(12) Does the project proposal contain all information that EPA requires in order to determine whether the project complies with Executive Order 11990 on wetlands? Will the proposed project have a significant adverse effect on fish and wildlife, or on wetlands or any other wildife habitat, especially those of endangered species? How significant is this impact in relation to the local or regional critical habitat needs? Have actions to mitigate habitat destruction been incorporated into the project? Has the recipient properly consulted with appropriate State and Federal fish, game and wildlife agencies and with the U.S. Fish and Wildlife Service? What were their replies?

(13) Describe any feasible alternatives to the proposed project in terms of environmental impacts, commitment of resources, public interest and costs and why they were not proposed.

(14) Describe other measures not discussed previously that are necessary to mitigate adverse environmental impacts resulting from the implementation of the proposed project.

Subpart I—Grants for Construction of Treatment Works

AUTHORITY: Secs. 101(e), 109(b), 201 through 205, 207, 208(d), 210 through 212, 215 through 219, 304(d)(3), 313, 501, 502, 511 and 516(b) of the Clean Water Act, as amended, 33 U.S.C. 1251 *et seq.*

SOURCE: 49 FR 6234, Feb. 17, 1984, unless otherwise noted.

§ 35.2000 Purpose and policy.

(a) The primary purpose of Federal grant assistance available under this subpart is to assist municipalities in meeting enforceable requirements of the Clean Water Act, particularly, applicable National Pollutant Discharge Elimination System (NPDES) permit requirements.

(b) This subpart supplements EPA's Uniform Relocation and Real Property Acquisition Policies Act regulation (part 4 of this chapter), its National Environmental Policy Act (NEPA) regulation (part 6 of this chapter), its public participation regulation (part 25 of this chapter), its intergovernmental review regulation (part 29 of this chapter), its general grant regulation (part 30 of this chapter), its debarment regulation (part 32 of this chapter), and its procurement under assistance regulation (part 33 of this chapter), and establishes requirements for Federal grant assistance for the building of wastewater treatment works. EPA may also find it necessary to publish other requirements applicable to the construction grants program in response to Congressional action and executive orders.

(c) EPA's policy is to delegate administration of the construction grants program on individual projects to State agencies to the maximum extent possible (see subpart F). Throughout this subpart we have used the term Regional Administrator. To the extent that the Regional Administrator delegates review of projects for compliance with the requirements of this subpart to a State agency under a delegation agreement (§ 35.1030), the term Regional Administrator may be read State agency. This paragraph does not affect the rights of citizens, applicants or grantees provided in subpart F.

(d) In accordance with the Federal Grant and Cooperative Agreement Act (Pub. L. 95–224) EPA will, when substantial Federal involvement is anticipated, award assistance under cooperative agreements. Throughout this subpart we have used the terms grant and grantee but those terms may be read cooperative agreement and recipient if appropriate.

(e) From time to time EPA publishes technical and guidance materials on various topics relevant to the construction grants program. Grantees may find this information useful in meeting requirements in this subpart. These publications, including the MCD and FRD series, may be ordered from: EPA, 401 M St. SW., room 1115 ET, WH 547, Washington, DC 20460. In order to expedite processing of requests, persons wishing to obtain these publications should request a copy of EPA form 7500–21 (the order form listing all available publications), from EPA Headquarters, Municipal Construction Division (WH–547) or from any EPA Regional Office.

§ 35.2005 Definitions.

(a) Words and terms not defined below shall have the meaning given to them in 40 CFR parts 30 and 33.

(b) As used in this subpart, the following words and terms mean:

(1) *Act.* The Clean Water Act (33 U.S.C. 1251 *et seq.*, as amended).

(2) *Ad valorem tax.* A tax based upon the value of real property.

(3) *Allowance.* An amount based on a percentage of the project's allowable building cost, computed in accordance with appendix B.

(4) *Alternative technology.* Proven wastewater treatment processes and techniques which provide for the reclaiming and reuse of water, productively recycle wastewater constitutuents or otherwise eliminate the discharge of pollutants, or recover energy. Specifically, alternative technolgy includes land application of effluent and sludge; aquifer recharge; aquaculture; direct reuse (non-potable); horticulture; revegetation of disturbed land; containment ponds; sludge composting and drying prior to land application; self-sustaining incineration; and methane recovery.

(5) *Alternative to conventional treatment works for a small community.* For purposes of §§ 35.2020 and 35.2032, alternative technology used by treatment works in small communities include alternative technologies defined in paragraph (b)(4), as well as, individual and onsite systems; small diameter gravity, pressure or vacuum sewers conveying treated or partially treated wastewater. These systems can also include small diameter gravity sewers carrying raw wastewater to cluster systems.

(6) *Architectural or engineering services.* Consultation, investigations, reports, or services for design-type projects within the scope of the practice of architecture or professional engineering as defined by the laws of the State or territory in which the grantee is located.

(7) *Best Practicable Waste Treatment Technology (BPWTT).* The cost-effective technology that can treat wastewater, combined sewer overflows and non-excessive infiltration and inflow in publicly owned or individual wastewater treatment works, to meet the applicable provisions of:

(i) 40 CFR part 133—secondary treatment of wastewater;

(ii) 40 CFR part 125, subpart G—marine discharge waivers;

(iii) 40 CFR 122.44(d)—more stringent water quality standards and State standards; or

(iv) 41 FR 6190 (February 11, 1976)—Alternative Waste Management Techniques for Best Practicable Waste Treatment (treatment and discharge, land application techniques and utilization practices, and reuse).

(8) *Building.* The erection, acquisition, alteration, remodeling, improvement or extension of treatment works.

(9) *Building completion.* The date when all but minor components of a project have been built, all equipment is operational and the project is capable of functioning as designed.

(10) *Collector sewer.* The common lateral sewers, within a publicly owned treatment system, which are primarily installed to receive wastewaters directly from facilities which convey wastewater from individual systems, or from private property, and which include service ''Y'' connections designed for connection with those facilities including:

(i) Crossover sewers connecting more than one property on one side of a major street, road, or highway to a lateral sewer on the other side when more cost effective than parallel sewers; and

(ii) Except as provided in paragraph (b)(10)(iii) of this section, pumping units and pressurized lines serving individual structures or groups of structures when such units are cost effective and are owned and maintained by the grantee.

(iii) This definition excludes other facilities which convey wastewater from individual structures, from private property to the public lateral sewer, or its equivalent and also excludes facilities associated with alternatives to conventional treatment works in small communities.

(11) *Combined sewer.* A sewer that is designed as a sanitary sewer and a storm sewer.

(12) *Complete waste treatment system.* A complete waste treatment system consists of all the treatment works necessary to meet the requirements of title III of the Act, involving: (i) The transport of wastewater from individual homes or buildings to a plant or facility where treatment of the wastewater is accomplished; (ii) the treatment of the wastewater to remove pollutants; and (iii) the ultimate disposal, including recycling or reuse, of the treated wastewater and residues which result from the treatment process.

(13) *Construction.* Any one or more of the following: Preliminary planning to determine the feasibility of treatment works, engineering, architectural, legal, fiscal, or economic investigations or studies, surveys, designs, plans, working drawings, specifications, procedures, field testing of innovative or alternative wastewater treatment processes and techniques (excluding operation and maintenance) meeting guidelines promulgated under section 304(d)(3) of the Act, or other necessary actions, erection, building, acquisition, alteration, remodeling, improvement, or extension of treatment works, or the inspection or supervision of any of the foregoing items.

(14) *Conventional technology.* Wastewater treatment processes and techniques involving the treatment of wastewater at a centralized treatment plant by means of biological or physical/chemical unit processes followed by direct point source discharge to surface waters.

(15) *Enforceable requirements of the Act.* Those conditions or limitations of section 402 or 404 permits which, if violated, could result in the issuance of a compliance order or initiation of a civil or criminal action under section 309 of the Act or applicable State laws. If a permit has not been issued, the term shall include any requirement which, in the Regional Administrator's judgment, would be included in the permit when issued. Where no permit applies, the term shall include any requirement which the Regional Administrator determines is necessary for the best practicable waste treatment technology to meet applicable criteria.

(16) *Excessive infiltration/inflow.* The quantities of infiltration/inflow which can be economically eliminated from a sewer system as determined in a cost-effectiveness analysis that compares the costs for correcting the infiltration/inflow conditions to the total costs for transportation and treatment of the infiltration/inflow. (See §§ 35.2005(b) (28) and (29) and 35.2120.)

(17) *Field testing.* Practical and generally small-scale testing of innovative or alternative technologies directed to verifying performance and/or refining design parameters not sufficiently tested to resolve technical uncertainties which prevent the funding of a promising improvement in innovative or alternative treatment technology.

(18) *Individual systems.* Privately owned alternative wastewater treatment works (including dual waterless/gray water systems) serving one or more principal residences, or small commercial establishments. Normally these are onsite systems with localized treatment and disposal of wastewater, but may be systems utilizing small diameter gravity, pressure or vacuum sewers conveying treated or partially treated wastewater. These systems can also include small diameter gravity sewers carrying raw wastewater to cluster systems.

(19) *Industrial user.* Any nongovernmental, nonresidential user of a publicly owned treatment works which is identified in the Standard Industrial Classification Manual, 1972, Office of Management and Budget, as amended and supplemented, under one of the following divisions:

Division A. Agriculture, Forestry, and Fishing
Division B. Mining
Division D. Manufacturing
Division E. Transportation, Communications, Electric, Gas, and Sanitary Services
Division I. Services

(20) *Infiltration.* Water other than wastewater that enters a sewer system (including sewer service connections and foundation drains) from the ground through such means as defective pipes, pipe joints, connections, or manholes. Infiltration does not include, and is distinguished from, inflow.

(21) *Inflow.* Water other than wastewater that enters a sewer system

(including sewer service connections) from sources such as, but not limited to, roof leaders, cellar drains, yard drains, area drains, drains from springs and swampy areas, manhole covers, cross connections between storm sewers and sanitary sewers, catch basins, cooling towers, storm waters, surface runoff, street wash waters, or drainage. Inflow does not include, and is distinguished from, infiltration.

(22) *Initiation of operation.* The date specified by the grantee on which use of the project begins for the purpose for which it was planned, designed, and built.

(23) *Innovative technology.* Developed wastewater treatment processes and techniques which have not been fully proven under the circumstances of their contemplated use and which represent a significant advancement over the state of the art in terms of significant reduction in life cycle cost or significant environmental benefits through the reclaiming and reuse of water, otherwise eliminating the discharge of pollutants, utilizing recycling techniques such as land treatment, more efficient use of energy and resources, improved or new methods of waste treatment management for combined municipal and industrial systems, or the confined disposal of pollutants so that they will not migrate to cause water or other environmental pollution.

(24) *Interceptor sewer.* A sewer which is designed for one or more of the following purposes:

(i) To intercept wastewater from a final point in a collector sewer and convey such wastes directly to a treatment facility or another interceptor.

(ii) To replace an existing wastewater treatment facility and transport the wastes to an adjoining collector sewer or interceptor sewer for conveyance to a treatment plant.

(iii) To transport wastewater from one or more municipal collector sewers to another municipality or to a regional plant for treatment.

(iv) To intercept an existing major discharge of raw or inadequately treated wastewater for transport directly to another interceptor or to a treatment plant.

(25) *Interstate agency.* An agency of two or more States established under an agreement or compact approved by the Congress, or any other agency of two or more States, having substantial powers or duties pertaining to the control of water pollution.

(26) *Marine bays and estuaries.* Semi-enclosed coastal waters which have a free connection to the territorial sea.

(27) *Municipality.* A city, town, borough, county, parish, district, association, or other public body (including an intermunicipal agency of two or more of the foregoing entities) created under State law, or an Indian tribe or an authorized Indian tribal organization, having jurisdiction over disposal of sewage, industrial wastes, or other waste, or a designated and approved management agency under section 208 of the Act.

(i) This definition includes a special district created under State law such as a water district, sewer district, sanitary district, utility district, drainage district or similar entity or an integrated waste management facility, as defined in section 201(e) of the Act, which has as one of its principal responsibilities the treatment, transport, or disposal of domestic wastewater in a particular geographic area.

(ii) This definition excludes the following:

(A) Any revenue producing entity which has as its principal responsibility an activity other than providing wastewater treatment services to the general public, such as an airport, turnpike, port facility or other municipal utility.

(B) Any special district (such as school district or a park district) which has the responsibility to provide wastewater treatment services in support of its principal activity at specific facilities, unless the special district has the responsibility under State law to provide wastewater treatment services to the community surrounding the special district's facility and no other municipality, with concurrent jurisdiction to serve the community, serves or intends to serve the special district's facility or the surrounding community.

(28) *Nonexcessive infiltration.* The quantity of flow which is less than 120 gallons per capita per day (domestic

base flow and infiltration) or the quantity of infiltration which cannot be economically and effectively eliminated from a sewer system as determined in a cost-effectiveness analysis. (See §§ 35.2005(b)(16) and 35.2120.)

(29) *Nonexcessive inflow.* The maximum total flow rate during storm events which does not result in chronic operational problems related to hydraulic overloading of the treatment works or which does not result in a total flow of more than 275 gallons per capita per day (domestic base flow plus infiltration plus inflow). Chronic operational problems may include surcharging, backups, bypasses, and overflows. (See §§ 35.2005(b)(16) and 35.2120).

(30) *Operation and Maintenance.* Activities required to assure the dependable and economical function of treatment works.

(i) *Maintenance:* Preservation of functional integrity and efficiency of equipment and structures. This includes preventive maintenance, corrective maintenance and replacement of equipment (See § 35.2005(b)(36)) as needed.)

(ii) *Operation:* Control of the unit processes and equipment which make up the treatment works. This includes financial and personnel management; records, laboratory control, process control, safety and emergency operation planning.

(31) *Principal residence.* For the purposes of § 35.2034, the habitation of a family or household for at least 51 percent of the year. Second homes, vacation or recreation residences are not included in this definition.

(32) *Project.* The activities or tasks the Regional Administrator identifies in the grant agreement for which the grantee may expend, obligate or commit funds.

(33) *Project performance standards.* The performance and operations requirements applicable to a project including the enforceable requirements of the Act and the specifications, including the quantity of excessive infiltration and inflow proposed to be eliminated, which the project is planned and designed to meet.

(34) *Priority water quality areas.* For the purposes of § 35.2015, specific stream segments or bodies of water, as determined by the State, where municipal discharges have resulted in the impairment of a designated use or significant public health risks, and where the reduction of pollution from such discharges will substantially restore surface or groundwater uses.

(35) *Project schedule.* A timetable specifying the dates of key project events including public notices of proposed procurement actions, subagreement awards, issuance of notice to proceed with building, key milestones in the building schedule, completion of building, initiation of operation and certification of the project.

(36) *Replacement.* Obtaining and installing equipment, accessories, or appurtenances which are necessary during the design or useful life, whichever is longer, of the treatment works to maintain the capacity and performance for which such works were designed and constructed.

(37) *Sanitary sewer.* A conduit intended to carry liquid and water-carried wastes from residences, commercial buildings, industrial plants and institutions together with minor quantities of ground, storm and surface waters that are not admitted intentionally.

(38) *Services.* A contractor's labor, time or efforts which do not involve the delivery of a specific end item, other than documents (e.g., reports, design drawings, specifications). This term does not include employment agreements or collective bargaining agreements.

(39) *Small commercial establishments.* For purposes of § 35.2034 private establishments such as restaurants, hotels, stores, filling stations, or recreational facilities and private, nonprofit entities such as churches, schools, hospitals, or charitable organizations with dry weather wastewater flows less than 25,000 gallons per day.

(40) *Small Community.* For purposes of §§ 35.2020(b) and 35.2032, any municipality with a population of 3,500 or less or highly dispersed sections of larger municipalities, as determined by the Regional Administrator.

(41) *State.* A State, the District of Columbia, the Commonwealth of Puerto Rico, the Virgin Islands, Guam, American Samoa, the Trust Territory of the

Pacific Islands, and the Commonwealth of the Northern Marianas. For the purposes of applying for a grant under section 201(g)(1) of the act, a State (including its agencies) is subject to the limitations on revenue producing entities and special districts contained in § 35.2005(b)(27)(ii).

(42) *State agency.* The State agency designated by the Governor having responsibility for administration of the construction grants program under section 205(g) of the Act.

(43) *Step 1.* Facilities planning.

(44) *Step 2.* Preparation of design drawings and specifications.

(45) *Step 3.* Building of a treatment works and related services and supplies.

(46) *Step 2+3.* Design and building of a treatment works and building related services and supplies.

(47) *Step 7.* Design/building of treatment works wherein a grantee awards a single contract for designing and building certain treatment works.

(48) *Storm sewer.* A sewer designed to carry only storm waters, surface runoff, street wash waters, and drainage.

(49) *Treatment works.* Any devices and systems for the storage, treatment, recycling, and reclamation of municipal sewage, domestic sewage, or liquid industrial wastes used to implement section 201 of the Act, or necessary to recycle or reuse water at the most economical cost over the design life of the works. These include intercepting sewers, outfall sewers, sewage collection systems, individual systems, pumping, power, and other equipment and their appurtenances; extensions, improvement, remodeling, additions, and alterations thereof; elements essential to provide a reliable recycled supply such as standby treatment units and clear well facilities; and any works, including acquisition of the land that will be an integral part of the treatment process or is used for ultimate disposal of residues resulting from such treatment (including land for composting sludge, temporary storage of such compost and land used for the storage of treated wastewater in land treatment systems before land application); or any other method or system for preventing, abating, reducing, storing, treating, separating, or disposing of municipal waste or industrial waste, including waste in combined storm water and sanitary sewer systems.

(50) *Treatment works phase or segment.* A treatment works phase or segment may be any substantial portion of a facility and its interceptors described in a facilities plan under § 35.2030, which can be identified as a subagreement or discrete subitem. Multiple subagreements under a project shall not be considered to be segments or phases. Completion of building of a treatment works phase or segment may, but need not in and of itself, result in an operable treatment works.

(51) *Useful life.* The period during which a treatment works operates. (Not ''design life'' which is the period during which a treatment works is planned and designed to be operated.)

(52) *User charge.* A charge levied on users of a treatment works, or that portion of the ad valorem taxes paid by a user, for the user's proportionate share of the cost of operation and maintenance (including replacement) of such works under sections 204(b)(1)(A) and 201(h)(2) of the Act and this subpart.

(53) *Value engineering.* A specialized cost control technique which uses a systematic and creative approach to identify and to focus on unnecessarily high cost in a project in order to arrive at a cost saving without sacrificing the reliability or efficiency of the project.

[49 FR 6234, Feb. 17, 1984, as amended at 50 FR 45894, Nov. 4, 1985; 55 FR 27095, June 29, 1990]

§ 35.2010 Allotment; reallotment.

(a) Allotments are made on a formula or other basis which Congress specifies for each fiscal year (FY). The allotment for each State and the availability period shall be announced each fiscal year in the FEDERAL REGISTER. This section applies only to funds allotted under section 205 of the Act.

(b) Unless otherwise provided by Congress, all sums allotted to a State under section 205 of the Act shall remain available for obligation until the end of the one year after the close of the fiscal year for which the sums were appropriated. Except as provided in § 35.2020(a), sums not obligated at the end of that period shall be subject to

reallotment on the basis of the same ratio as applicable to the then-current fiscal year, adjusted for the States which failed to obligate any of the fiscal year funds being reallotted, but none of the funds reallotted shall be made available to any State which failed to obligate any of the fiscal year funds being reallotted. Any sum made available to a State by reallotment under this section shall be in addition to any funds otherwise allotted to such State for grants under this subpart during any fiscal year and the reallotted funds shall remain available for obligation until the last day of the fiscal year following the fiscal year in which the reallotted funds are issued by the Comptroller to the Regional Administrator.

(c) Except for funds appropriated for FY 72 and fiscal years prior to 1972, sums which are deobligated and reissued by the Comptroller to the Regional Administrator before their reallotment date shall be available for obligation in the same State and treated in the same manner as the allotment from which such funds were derived.

(d) Except for funds appropriated for FY 72 and fiscal years prior to 1972, deobligated sums which are reissued by the Comptroller to the Regional Administrator after their reallotment date shall be available for obligation in the same State until the last day of the fiscal year following the fiscal year in which the reissuance occurs.

(e) Deobligated FY 72 and prior to 1972 fiscal year funds, except 1964, 1965 and 1966 funds, will be credited to the allowances of the same Region from which such funds are recovered, and the Regional Administrator may determine how these recoveries are credited to the States within the Region.

[49 FR 6234, Feb. 17, 1984, as amended at 50 FR 45895, Nov. 4, 1985]

§ 35.2012 Capitalization grants.

Amounts allotted to a State under title II may be deposited in that State's water pollution control revolving fund as a capitalization grant in accordance with 40 CFR 35.5020 (f) and (g).

[55 FR 27095, June 29, 1990]

§ 35.2015 State priority system and project priority list.

(a) *General.* The Regional Administrator will award grant assistance from annual allotments to projects on a State project priority list developed in accordance with an approved State priority system. The State priority system and list must be designed to achieve optimum water quality management consistent with the goals and requirements of the Act. All projects for building treatment works to be funded by EPA must be included on a State project list, except training facilities funded under section 109(b) of the Act and marine CSO projects funded under section 201(n)(2) of the Act.

(b) *State priority system.* The State priority system describes the methodology used to rank projects that are considered eligible for assistance. The priority system should give high priority to projects in priority water quality areas. The priority system may also include the administrative, management, and public participation procedures required to develop and revise the State project priority list. The priority system includes at least the following elements:

(1) *Criteria.* (i) The priority system shall include at least the following criteria for ranking projects:

(A) The impairment of classified water uses resulting from existing municipal pollutant discharges; and

(B) The extent of surface or ground water use restoration or public health improvement resulting from the reduction in pollution.

(ii) The State may also include other criteria in its priority system for ranking projects, such as the use of innovative or alternative technology, the need to complete a waste treatment system for which a grant for a phase or segment was previously awarded; and the category of need and the existing population affected.

(iii) In ranking phased and segmented projects States must comply with § 35.2108.

(2) *Categories of need.* All projects must fit into at least one of the categories of need described in this paragraph to be eligible for funding, except as provided in paragraphs (b)(2) (iii) and (iv) of this section. States will

have sole authority to determine the priority for each category of need.

(i) Before October 1, 1984, these categories of need shall include at least the following:

(A) Secondary treatment (category I);

(B) Treatment more stringent than secondary (category II);

(C) Infiltration/inflow correction (category IIIA);

(D) Major sewer system rehabilitation (category IIIB);

(E) New collector sewers and appurtenances (category IVA);

(F) New interceptors and appurtenances (category IVB);

(G) Correction of combined sewer overflows (category V).

(ii) After September 30, 1984, except as provided in paragraphs (b)(2) (iii) and (iv) of this section, these categories of need shall include only the following:

(A) Secondary treatment or any cost-effective alternative;

(B) Treatment more stringent than secondary or any cost-effective alternative;

(C) New interceptors and appurtenances; and

(D) Infiltration/inflow correction.

(iii) After September 30, 1984, up to 20 percent (as determined by the Governor) of a State's annual allotment may be used for categories of need other than those listed in paragraph (b)(2)(ii) of this section and for any purpose for which grants may be made under sections 319 (h) and (i) of the Act (including any innovative and alternative approaches for the control of nonpoint sources of pollution).

(iv) After September 30, 1984, the Governor may include in the priority system a category for projects needed to correct combined sewer overflows which result in impaired uses in priority water quality areas. Only projects which comply with the requirements of § 35.2024(a) may be included in this category.

(c) *Project priority list.* The State's annual project priority list is an ordered listing of projects for which the State expects Federal financial assistance. The priority list contains two portions: the fundable portion, consisting of those projects anticipated to be funded from funds available for obligation; and the planning portion, consisting of projects anticipated to be funded from future authorized allotments.

(1) The State shall develop the project priority list consistent with the criteria established in the approved priority system. In ranking projects, the State must also consider total funds available, needs and priorities set forth in areawide water quality management plans, and any other factors contained in the State priority system.

(2) The list shall include an estimate of the eligible cost of each project.

(d) *Public participation.* (1) In addition to any requirements in 40 CFR part 25, the State shall hold public hearings as follows:

(i) Before submitting its priority system to the Regional Administrator for approval and before adopting any significant change to an approved priority system; and

(ii) Before submitting its annual project priority list to the Regional Administrator for acceptance and before revising its priority list unless the State agency and the Regional Administrator determine that the revision is not significant.

(iii) If the approved State priority system contains procedures for bypassing projects on the fundable portion of the priority list, such bypasses will not be significant revisions for purposes of this section.

(2) Public hearings may be conducted as directed in the State's continuing planning process document or may be held in conjunction with any regular public meeting of the State agency.

(e) *Regional Administrator review.* The State must submit its priority system, project priority list and revisions of the priority system or priority list to the Regional Administrator for review. The State must also submit each year, by August 31, a new priority list for use in the next fiscal year.

(1) After submission and approval of the initial priority system and submission and acceptance of the project priority lists under paragraph (c) of this section, the State may revise its priority system and list as necessary.

(2) The Regional Administrator shall review the State priority system and any revisions to insure that they are

designed to obtain compliance with the criteria established in accordance with paragraphs (b) and (d) of this section and the enforceable requirements of the Act as defined in § 35.2005(b)(15). The Regional Administrator shall complete review of the priority system within 30 days of receipt of the system from the State and will notify the State in writing of approval or disapproval of the priority system, stating any reasons for disapproval.

(3) The Regional Administrator will review the project priority list and any revisions to insure compliance with the State's approved priority system and the requirements of paragraph (c) of this section. The Regional Administrator will complete review of the project priority list within 30 days of receipt from the State and will notify the State in writing of acceptance or rejection, stating the reasons for the rejection. Any project which is not contained on an accepted current priority list will not receive funding.

(f) *Compliance with the enforceable requirements of the Act.* (1) Except as limited under paragraph (f)(2) of this section, the Regional Administrator, after a public hearing, shall require the removal of a specific project or portion thereof from the State project priority list if the Regional Administrator determines it will not contribute to compliance with the enforceable requirements of the Act.

(2) The Regional Administrator shall not require removal of projects in categories under paragraphs (b)(2)(i) (D) through (G) of this section which do not meet the enforceable requirements of the Act unless the total Federal share of such projects would exceed 25 percent of the State's annual allotment.

[49 FR 6234, Feb. 17, 1984, as amended at 55 FR 27095, June 29, 1990]

§ 35.2020 Reserves.

In developing its priority list the State shall establish the reserves required or authorized under this section. The amount of each mandatory reserve shall be based on the allotment to each State from the annual appropriation under § 35.2010. The State may also establish other reserves which it determines appropriate.

(a) *Reserve for State management assistance grants.* Each State may request that the Regional Administrator reserve, from the State's annual allotment, up to 4 percent of the State's allotment based on the amount authorized to be appropriated, or $400,000, whichever is greater, for State management assistance grants under subpart A of this part. Grants may be made from these funds to cover the costs of administering activities delegated or scheduled to be delegated to a State. Funds reserved for this purpose that are not obligated by the end of the allotment period will be added to the amounts last allotted to a State. These funds shall be immediately available for obligation to projects in the same manner and to the same extent as the last allotment.

(b) *Reserve for alternative systems for small communities.* Each State with 25 percent or more rural population (as determined by the population estimates of the Bureau of Census) shall reserve not less than 4 percent nor more than 7½ percent of the State's annual allotment for alternatives to conventional treatment works for small communities. The Governor of any non-rural State may reserve up to 7½ percent of the State's allotment for the same purpose.

(c) *Reserve for innovative and alternative technologies.* Each State shall reserve not less than 4 percent nor more than 7½ percent from its annual allotment to increase the Federal share of grant awards under § 35.2032 for projects which use innovative or alternative wastewater treatment processes and techniques. Of this amount not less than one-half of one percent of the State's allotment shall be set aside to increase the Federal share for projects using innovative processes and techniques.

(d) *Reserve for water quality management.* Each State shall reserve not less than $100,000 nor more than 1 percent from its annual allotments, to carry out water quality management planning under § 35.2023, except that in the case of Guam, the Virgin Islands, American Samoa, the Trust Territory of the Pacific Islands and the Commonwealth of the Northern Marianas, a

reasonable amount shall be reserved for this purpose.

(e) *Reserve for Advances of Allowance.* Each State shall reserve a reasonable portion of its annual allotment not to exceed 10 percent for advances of allowance under § 35.2025. The Regional Administrator may waive this reserve requirement where a State can demonstrate that such a reserve is not necessary because no new facilities planning or design work requiring an advance and resulting in Step 3 grant awards is expected to begin during the period of availability of the annual allotment.

(f) *Nonpoint source reserve.* Each State shall reserve 1 percent of its annual allotment or $100,000, whichever is greater, for development and implementation of a nonpoint source management program under section 319 of the Act. Sums reserved by the State under this paragraph that are in excess of $100,000 and that are not used for these purposes, may be used by the State for any other purpose under title II of the Act.

(g) *Marine estuary reserve.* The Administrator shall reserve, before allotment of funds to the States, 1 percent of the funds appropriated under section 207 in fiscal years 1987 and 1988, and 1½ percent of the funds appropriated under section 207 in fiscal years 1989 and 1990, to carry out section 205(l) of the Act.

(h) *Indian program reserve.* The Administrator shall reserve, before allotment of funds to the States, one-half of 1 percent of the funds appropriated under section 207 in fiscal years 1987, 1988, 1989 and 1990, for grants for the development of waste treatment management plans and for the construction of sewage treatment works to serve Indian tribes.

[49 FR 6234, Feb. 17, 1984, as amended at 50 FR 45895, Nov. 4, 1985; 55 FR 27095, June 29, 1990]

§ 35.2021 Reallotment of reserves.

(a) Mandatory portions of reserves under § 35.2020(b) through (g) shall be reallotted if not obligated during the allotment period (§ 35.2010(b) and (d)). Such reallotted sums are not subject to reserves. The State management assistance reserve under § 35.2020(a) is not subject to reallotment.

(b) States may request the Regional Administrator to release funds in optional reserves or optional portions of required reserves under § 35.2020(b) through (e) for funding projects at any time before the reallotment date. If these optional reserves are not obligated or released and obligated for other purposes before the reallotment date, they shall be subject to reallotment under § 35.2010(b).

(c) Sums deobligated from the mandatory portion of reserves under paragraphs (b) through (e) of § 35.2020 which are reissued by the Comptroller to the Regional Administrator before the initial reallotment date for those funds shall be returned to the same reserve. (See § 35.2010(c)).

[49 FR 6234, Feb. 17, 1984, as amended at 50 FR 45895, Nov. 4, 1985; 55 FR 27095, June 29, 1990]

§ 35.2023 Water quality management planning.

(a) From funds reserved under § 35.2020(d) the Regional Administrator shall make grants to the States to carry out water quality management planning including but not limited to:

(1) Identifying the most cost-effective and locally acceptable facility and non-point measures to meet and maintain water quality standards;

(2) Developing an implementation plan to obtain State and local financial and regulatory commitments to implement measures developed under paragraph (a)(1) of this section;

(3) Determining the nature, extent and causes of water quality problems in various areas of the State and interstate region, and reporting on these annually; and

(4) Determining which publicly owned treatment works should be constructed, in which areas and in what sequence, taking into account the relative degree of effluent reduction attained, the relative contributions to water quality of other point or nonpoint sources, and the consideration of alternatives to such construction, and implementing section 303(e) of the Act.

(b) In carrying out planning with grants made under paragraph (a) of this section, a State shall develop

jointly with local, regional and interstate entities, a plan for carrying out the program and give funding priority to such entities and designated or undesignated public comprehensive planning organizations to carry out the purposes of this section.

§ 35.2024 Combined sewer overflows.

(a) *Grant assistance from State allotment.* As provided in § 35.2015(b)(2)(iv), after September 30, 1984, upon request from a State, the Administrator may award a grant under section 201(n)(1) of the Act from the State allotment for correction of combined sewer overflows provided that the project is on the project priority list, it addresses impaired uses in priority water quality areas which are due to the impacts of the combined sewer overflows and otherwise meets the requirements of this subpart. The State must demonstrate to the Administrator that the water quality goals of the Act will not be achieved without correcting the combined sewer overflows. The demonstration shall as a minimum prove that significant usage of the water for fishing and swimming will not be possible without the proposed project, and that the project will result in substantial restoration of an existing impaired use.

(b) *Separate fund for combined sewer overflows in marine waters.* (1) After September 30, 1982, the Administrator may award grants under section 201(n)(2) of the Act for addressing impaired uses or public health risks in priority water quality areas in marine bays and estuaries due to the impacts of combined sewer overflows. The Administrator may award such grants provided that the water quality benefits of the proposed project have been demonstrated by the State. The demonstration shall as a minimum prove that significant usage of the water for shellfishing and swimming will not be possible without the proposed project for correction of combined sewer overflows, and the proposed project will result in substantial restoration of an existing impaired use.

(2) The Administrator shall establish priorities for projects with demonstrated water quality benefits based upon the following criteria:

(i) Extent of water use benefits that would result, including swimming and shellfishing;

(ii) Relationship of water quality improvements to project costs; and

(iii) National and regional significance.

(3) If the project is a phase or segment of the proposed treatment works described in the facilities plan, the criteria in paragraph (b)(2) of this section must be applied to the treatment works described in the facilities plan and each segment proposed for funding.

(4) All requirements of this subpart apply to grants awarded under section 201(n)(2) of the Act except §§ 35.2010, 35.2015, 35.2020, 35.2021, 35.2025(b), 35.2042, 35.2103, 35.2109, and 35.2202.

§ 35.2025 Allowance and advance of allowance.

(a) *Allowance.* Step 2+3 and Step 3 grant agreements will include an allowance for facilities planning and design of the project and Step 7 agreements will include an allowance for facility planning in accordance with appendix B of this subpart.

(b) *Advance of allowance to potential grant applicants.* (1) After application by the State (see § 35.2040(d)), the Regional Administrator will award a grant to the State in the amount of the reserve under § 35.2020(e) to advance allowances to potential grant applicants for facilities planning and project design.

(2) The State may request that the right to receive payments under the grant be assigned to specified potential grant applicants.

(3) The State may provide advances of allowance only to small communities, as defined by the State, which would otherwise be unable to complete an application for a grant under § 35.2040 in the judgment of the State.

(4) The advance shall not exceed the Federal share of the estimate of the allowance for such costs which a grantee would receive under paragraph (a) of this section.

(5) In the event a Step 2+3, Step 3 or Step 7 grant is not awarded to a recipient of an advance, the State may seek repayment of the advance on such

terms and conditions as it may determine. When the State recovers such advances they shall be added to its most recent grant for advances of allowance.

[49 FR 6234, Feb. 17, 1984, as amended at 55 FR 27095, June 29, 1990]

§ 35.2030 Facilities planning.

(a) *General.* (1) Facilities planning consists of those necessary plans and studies which directly relate to treatment works needed to comply with enforceable requirements of the Act. Facilities planning will investigate the need for proposed facilities. Through a systematic evaluation of alternatives that are feasible in light of the unique demographic, topographic, hydrologic and institutional characteristics of the area, it will demonstrate that, except for innovative and alternative technology under § 35.2032, the selected alternative is cost effective (i.e., is the most economical means of meeting the applicable effluent, water quality and public health requirements over the design life of the facility while recognizing environmental and other non-monetary considerations). For sewered communities with a population of 10,000 or less, consideration must be given to appropriate low cost technologies such as facultative ponds, trickling filters, oxidation ditches, or overland-flow land treatment; and for unsewered portions of communities of 10,000 or less, consideration must be given to onsite systems. The facilities plan will also demonstrate that the selected alternative is implementable from legal, institutional, financial and management standpoints.

(2) Grant assistance may be awarded before certification of the completed facilities plan if:

(i) The Regional Administrator determines that applicable statutory and regulatory requirements (including part 6) have been met; that the facilities planning related to the project has been substantially completed; and that the project for which grant assistance is awarded will not be significantly affected by the completion of the facilities plan and will be a component part of the complete waste treatment system; and

(ii) The applicant agrees to complete the facilities plan on a schedule the State accepts and such schedule is inserted as a special condition of the grant agreement.

(b) *Facilities plan contents.* A completed facilities plan must include:

(1) A description of both the proposed treatment works, and the complete waste treatment system of which it is a part.

(2) A description of the Best Practicable Wastewater Treatment Technology. (See § 35.2005(b)(7).)

(3) A cost-effectiveness analysis of the feasible conventional, innovative and alternative wastewater treatment works, processes and techniques capable of meeting the applicable effluent, water quality and public health requirements over the design life of the facility while recognizing environmental and other non-monetary considerations. The planning period for the cost-effectiveness analysis shall be 20 years. The monetary costs to be considered must include the present worth or equivalent annual value of all capital costs and operation and maintenance costs. The discount rate established by EPA for the construction grants program shall be used in the cost-effectiveness analysis. The population forecasting in the analysis shall be consistent with the current Needs Survey. A cost-effectiveness analysis must include:

(i) An evaluation of alternative flow reduction methods. (If the grant applicant demonstrates that the existing average daily base flow (ADBF) from the area is less than 70 gallons per capita per day (gpcd), or if the Regional Administrator determines the area has an effective existing flow reduction program, additional flow reduction evaluation is not required.)

(ii) A description of the relationship between the capacity of alternatives and the needs to be served, including capacity for future growth expected after the treatment works become operational. This includes letters of intent from significant industrial users and all industries intending to increase their flows or relocate in the area documenting capacity needs and characteristics for existing or projected flows;

(iii) An evaluation of improved effluent quality attainable by upgrading

the operation and maintenance and efficiency of existing facilities as an alternative or supplement to construction of new facilities;

(iv) An evaluation of the alternative methods for the reuse or ultimate disposal of treated wastewater and sludge material resulting from the treatment process;

(v) A consideration of systems with revenue generating applications;

(vi) An evaluation of opportunities to reduce use of, or recover energy;

(vii) Cost information on total capital costs, and annual operation and maintenance costs, as well as estimated annual or monthly costs to residential and industrial users.

(4) A demonstration of the non-existence or possible existence of excessive inflitration/inflow in the sewer system. See § 35.2120.

(5) An analysis of the potential open space and recreation opportunities associated with the project.

(6) An adequate evaluation of the environmental impacts of alternatives under part 6 of this chapter.

(7) An evaluation of the water supply implications of the project.

(8) For the selected alternative, a concise description at an appropriate level of detail, of at least the following:

(i) Relevant design parameters;

(ii) Estimated capital construction and operation and maintenance costs, (identifying the Federal, State and local shares), and a description of the manner in which local costs will be financed;

(iii) Estimated cost of future expansion and long-term needs for reconstruction of facilities following their design life;

(iv) Cost impacts on wastewater system users; and

(v) Institutional and management arrangements necessary for successful implementation.

(c) *Submission and review of facilities plan.* Each facilities plan must be submitted to the State for review. EPA recommends that potential grant applicants confer with State reviewers early in the facilities planning process. In addition, a potential grant applicant may request in writing from the State and EPA an early determination under part 6 of this chapter of the appropriateness of a categorical exclusion from NEPA requirements, the scope of the environmental information document or the early preparation of an environmental impact statement.

§ 35.2032 Innovative and alternative technologies.

(a) *Funding for innovative and alternative technologies.* Projects or portions of projects using unit processes or techniques which the Regional Administrator determines to be innovative or alternative technology shall receive increased grants under § 35.2152.

(1) Only funds from the reserve in § 35.2020(c) shall be used to increase these grants.

(2) If the project is an alternative to conventional treatment works for a small community, funds from the reserve in § 35.2020(b) may be used for the 75 percent portion, or any lower Federal share of the grant as determined under § 35.2152.

(b) *Cost-effectiveness preference.* The Regional Administrator may award grant assistance for a treatment works or portion of a treatment works using innovative or alternative technologies if the total present worth cost of the treatment works for which the grant is to be made does not exceed the total present worth cost of the most cost-effective alternative by more than 15 percent.

(1) Privately-owned individual systems (§ 35.2034) are not eligible for this preference.

(2) If the present worth costs of the innovative or alternative unit processes are 50 percent or less of the present worth cost of the treatment works, the cost-effectiveness preference applies only to the innovative or alternative components.

(c) *Modification or replacement of innovative and alternative projects.* The Regional Administrator may award grant assistance to fund 100 percent of the allowable costs of the modification or replacement of any project funded with increased grant funding in accordance with paragraph (a) of this section if he determines that:

(1) The innovative or alternative elements of the project have caused the project or significant elements of the complete waste treatment system of

which the project is a part to fail to meet project performance standards;

(2) The failure has significantly increased operation and maintenance expenditures for the project or the complete waste treatment system of which the project is a part; or requires significant additional capital expenditures for corrective action;

(3) The failure has occurred prior to two years after initiation of operation of the project; and

(4) The failure is not attributable to negligence on the part of any person.

§ 35.2034 Privately owned individual systems.

(a) An eligible applicant may apply for a grant to build privately owned treatment works serving one or more principal residences or small commercial establishments.

(b) In addition to those applicable limitations set forth in §§ 35.2100 through 35.2127 the grant applicant shall:

(1) Demonstrate that the total cost and environmental impact of building the individual system will be less than the cost of a conventional system;

(2) Certify that the principal residence or small commercial establishment was constructed before December 27, 1977, and inhabited or in use on or before that date;

(3) Apply on behalf of a number of individual units to be served in the facilities planning area;

(4) Certify that public ownership of such works is not feasible and list the reasons; and

(5) Certify that such treatment works will be properly operated and maintained and will comply with all other requirements of section 204 of the Act.

§ 35.2035 Rotating biological contractor (RBC) replacement grants.

The Regional Administrator may award a grant for 100 percent of the cost, including planning and design costs, of modification or replacement of RBCs which have failed to meet design performance specifications, provided:

(a) The applicant for a modification/replacement grant demonstrates to the Regional Administrator's satisfaction, by a preponderance of the evidence, that the RBC failure is not due to the negligence of any person, including the treatment works owner, the applicant, its engineers, contractors, equipment manufacturers or suppliers;

(b) The RBC failure has significantly increased the project's capital or operation and maintenance costs;

(c) The modification/replacement project meets all requirements of EPA's construction grant and other applicable regulations, including 40 CFR parts 31, 32 and 35;

(d) The modification/replacement project is included within the fundable range of the State's annual project priority list; and

(e) The State certifies the project for funding from its regular (i.e. non-reserve) allotments and from funds appropriated or otherwise available after February 4, 1987.

[55 FR 27095, June 29, 1990]

§ 35.2036 Design/build project grants.

(a) *Terms and conditions.* The Regional Administrator may award a design/build (Step 7) project grant provided that:

(1) The proposed treatment works has an estimated total cost of $8 million or less;

(2) The proposed treatment works is an aerated lagoon, trickling filter, waste stabilization pond, land application system (wastewater or sludge), slow rate (intermittent) sand filter or subsurface disposal system;

(3) The proposed treatment works will be an operable unit, will meet all requirements of title II of the Act, and will be operated to meet the requirements of any applicable permit;

(4) The grantee obtains bonds from the contractor in an amount the Regional Administrator determines adequate to protect the Federal interest in the treatment works (see 40 CFR 31.36(h));

(5) The grantee will not allow any engineer, engineering firm or contractor which provided facilities planning or pre-bid services to bid or carry out any part of the design/build work;

(6) Contracts will be firm, fixed price contracts;

(7) The grantee agrees that the grant amount, as amended to reflect the lowest responsive/responsible bid (see

paragraph (e) of this section), will not be increased;

(8) The grantee will establish reasonable building start and completion dates;

(9) The grantee agrees that EPA will not pay more than 95 percent of the grant amount until after completion of building and the Regional Administrator's final project approval, based on initiation of operation and acceptance of the facility by the grantee;

(10) The grantee agrees that a recipient of a Step 7 grant is not eligible for any other grant for the project under title II of the Act; and

(11) The grantee accepts other terms and conditions deemed necessary by the Regional Administrator.

(b) *Procurement.* (1) Grantee procurement for developing or supplementing the facilities plan to prepare the pre-bid package, as well as for designing and building the project and performing construction management and contract administration, will be in accordance with EPA procurement requirements at 40 CFR part 31.

(2) The grantee will use the sealed bid (formal advertising) method of procurement to select the design/build contractor.

(3) The grantee may use the same architect or engineer that prepared the facilities plan to provide any or all of the pre-bid, construction management, and contract and/or project administration services provided the initial procurement met EPA requirements (see 40 CFR 31.36(k)).

(c) *Pre-bid package.* Each design/build project grant will provide for the preparation of a pre-bid package that is sufficiently detailed to insure that the bids received for the design/build work are complete, accurate and comparable and will result in a cost-effective, operable facility.

(d) *Grant amount.* The grant amount will be based on an estimate of the design/build project's final cost, including:

(1) An allowance for facilities planning if the grantee did not receive a Step 1 grant (the amount of the allowance is established as a percentage of the estimated design/build cost in accordance with appendix B of this subpart);

(2) An estimated cost of supplementing the facilities plan and other costs necessary to prepare the pre-bid package (see appendix A.I.1(a) of this subpart); and

(3) The estimated cost of the design/build contract.

(e) *Amended grant amount.* (1) After bids are accepted for the design/build contract, and the price of the lowest responsive, responsible bidder is determined, EPA will amend the design/build project grant based on:

(i) The amount of the lowest responsive, responsible bid;

(ii) A lump sum for construction management, contract and project administration services and contingencies;

(iii) Any adjustments to the final allowance for facilities planning if included as required by paragraph (c)(1) of this section (the amount of the final allowance is established as a percentage of the actual building cost in accordance with appendix B of this subpart);

(iv) The actual reasonable and necessary cost of supplementing the facilities plan to prepare the pre-bid package (see paragraph (c)(1) of this section); and

(v) The submission of approvable items required by § 35.2203 of this part.

(2) Changes to Step 7 projects cannot increase the amount of EPA assistance established at the time of the grant amendment.

(f) *Allotment limit for design/build grants.* The Governor may use up to 20 percent of the State's annual allotment for design/build project grants.

[55 FR 27096, June 29, 1990]

§ 35.2040 Grant application.

Applicants for Step 2+3 or Step 3 assistance shall submit applications to the State. In addition to the information required in parts 30 and 33 of this subchapter, applicants shall provide the following information:

(a) *Step 2+3: Combined design and building of a treatment works and building related services and supplies.* An application (EPA form 5700–32) for Step 2+3 grant assistance shall include:

(1) A facilities plan prepared in accordance with subpart E or I as appropriate;

(2) Certification from the State that there has been adequate public participation based on State and local statutes;

(3) Notification of any advance received under § 35.2025(b);

(4) Evidence of compliance with all application limitations on award (§ 35.2100 through § 35.2127); and

(5) The project schedule.

(b) *Step 3: Building of a treatment works and related services and supplies.* An application (EPA form 5700–32) for Step 3 grant assistance shall include:

(1) A facilities plan prepared in accordance with subpart E or I as appropriate;

(2) Certification from the State that there has been adequate public participation based on State and local statutes;

(3) Notification of any advance received under § 35.2025(b);

(4) Evidence of compliance with all applicable limitations on award (§§ 35.2100 through 35.2127);

(5) Final design drawings and specifications;

(6) The project schedule; and

(7) In the case of an application for Step 3 assistance that is solely for the acquisition of eligible real property, a plat which shows the legal description of the property to be acquired, a preliminary layout of the distribution and drainage systems, and an explanation of the intended method of acquiring the real property (see 40 CFR part 4).

(c) *Training facility project.* An application (EPA form 5700–32) for a grant for construction and support of a training facility, facilities or training programs under section 109(b) of the Act shall include:

(1) A written commitment from the State agency to carry out at such facility a program of training; and

(2) If a facility is to be built, an engineering report including facility design data and cost estimates for design and building.

(d) *Advances of allowance.* State applications for advances of allowance to small communities shall be on EPA form 5700–31, Application for Federal Assistance (short form). The application shall include:

(1) A list of communities that received an advance of allowance and the amount received by each under the previous State grant; and

(2) The basis for the amount requested.

(e) *Field Testing of Innovative and Alternative Technology.* An application (EPA Form 5700–32) for field testing of I/A projects shall include a field testing plan containing:

(1) Identification; including size, of all principal components to be tested;

(2) Location of testing facilities in relationship to full scale design;

(3) Identification of critical design parameters and performance variables that are to be verified as the basis for I/A determinations:

(4) Schedule for construction of field testing facilities and duration of proposed testing;

(5) Capital and O&M cost estimate of field testing facilities with documentation of cost effectiveness of field testing approach; and

(6) Design drawing, process flow diagram, equipment specification and related engineering data and information sufficient to describe the overall design and proposed performance of the field testing facility.

(f) *Marine CSO Fund Project.* An application (EPA Form 5700–32) for marine CSO grant assistance under § 35.2024(b) shall include:

(1) All information required under paragraphs (b) (1), (2), (4), (6), and (7), of this section;

(2) Final design drawings and specifications or a commitment to provide them by a date set by the Regional Administrator; and

(3) The water quality benefits demonstration required under § 35.2024(b)(1).

(g) *Design/build project grant (Step 7).* An application (EPA Form 5700–20) for a design/build project grant shall include:

(1) All the information required in paragraphs (b)(1), (2) and (4) of this section; and

(2) The estimated building start and completion dates and Federal payment schedule (the start and completion dates may be revised when the design/

build bids are accepted and included in the amended grant).

(Approved by the Office of Management and Budget under control number 2040–0027)

[49 FR 6234, Feb. 17, 1984, as amended at 50 FR 45895, Nov. 4, 1985; 55 FR 27096, June 29, 1990]

§ 35.2042 Review of grant applications.

(a) All States shall review grant applications to ensure that they are complete. When the State determines the proposed project is entitled to priority it shall forward the State priority certification and, except where application review is delegated, the complete application to the regional Administrator for review.

(b)(1) All States delegated authority to manage the construction grants program under section 205(g) of the Act and subpart F of this part shall furnish a written certification to the Regional Administrator, on a project-by-project basis, stating that the applicable Federal requirements within the scope of authority delegated to the State under the delegation agreement have been met. The certification must be supported by documentation specified in the delegation agreement which will be made available to the Regional Administrator upon request. The Regional Administrator shall accept the certification unless he determines the State has failed to establish adequate grounds for the certification or that an applicable requirement has not been met.

(2)(i) When EPA receives a certification covering all delegable preaward requirements, the Regional Administrator shall approve or disapprove the grant within 45 calendar days of receipt of the certification. The Regional Administrator shall state in writing the reasons for any disapproval, and he shall have an additional 45 days to review any subsequent revised submissions. If the Regional Administrator fails to approve or disapprove the grant within 45 days of receipt of the application, the grant shall be deemed approved and the Regional Adminstrator shall issue the grant agreement.

(ii) Grant increase requests are subject to the 45 day provision of this section if the State has been delegated authority over the subject matter of the request.

(c) Applications for assistance for training facilities funded under section 109(b) and for State advances of allowance under section 201(l)(1) of the Act and § 35.2025 will be reviewed in accordance with part 30 of this subchapter.

(Approved by the Office of Management and Budget under control number 2040–0027)

§ 35.2050 Effect of approval or certification of documents.

Review or approval of facilities plans, design drawings and specifications or other documents by or for EPA is for administrative purposes only and does not relieve the grantee of its responsibility to properly plan, design, build and effectively operate and maintain the treatment works described in the grant agreement as required under law, regulations, permits, and good management practices. EPA is not responsible for increased costs resulting from defects in the plans, design drawings and specifications or other subagreement documents.

§ 35.2100 Limitations on award.

(a) *Facilities plan approval.* Before awarding grant assistance for any project the Regional Administrator shall approve the facilities plan and final design drawings and specifications and determine that the applicant and the applicant's project have met all the applicable requirements of §§ 35.2040 and 35.2100 through § 35.2127 except as provided in § 35.2202 for Step 2+3 projects and § 35.2203 for Step 7 projects.

(b) *Agreement on eligible costs.* (1) Concurrent with the approval of a Step 3, Step 2+3 or Step 7 grant, the Regional Administrator and the grant applicant will enter into a written agreement which will specify the items in the proposed project that are eligible for Federal payments and which shall be incorporated as a special grant condition in the grant award.

(2) Notwithstanding such agreement, the Regional Administrator may:

(i) Modify eligibility determinations that are found to violate applicable Federal statutes and regulations;

(ii) Conduct an audit of the project;

(iii) Withhold or recover Federal funds for costs that are found to be unreasonable, unsupported by adequate documentation or otherwise unallowable under applicable Federal cost principles;

(iv) Withhold or recover Federal funds for costs that are incurred on a project that fails to meet the design specifications or effluent limitations contained in the grant agreement and NPDES permit issued under section 402 of the Act.

[55 FR 27096, June 29, 1990]

§ 35.2101 Advanced treatment.

Projects proposing advanced treatment shall be awarded grant assistance only after the project has been reviewed under EPA's advanced treatment review policy. This review must be completed before submission of any application. EPA recommends that potential grant applicants obtain this review before initiation of design.

§ 35.2102 Water quality management planning.

Before grant assistance can be awarded for any treatment works project, the Regional Administrator shall first determine that the project is:

(a) Included in any water quality management plan being implemented for the area under section 208 of the Act or will be included in any water quality management plan that is being developed for the area and reasonable progress is being made toward the implementation of that plan; and

(b) In conformity with any plan or report implemented or being developed by the State under sections 303(e) and 305(b) of the Act.

[55 FR 27097, June 29, 1990]

§ 35.2103 Priority determination.

The project shall be entitled to priority in accordance with § 35.2015, and the award of grant assistance for the project shall not jeopardize the funding of any project of higher priority under the approved priority system.

§ 35.2104 Funding and other considerations.

(a) The applicant shall;

(1) Agree to pay the non-Federal project costs;

(2) Demonstrate the legal, institutional, managerial, and financial capability to ensure adequate building and operation and maintenance of the treatment works throughout the applicant's jurisdiction including the ability to comply with part 30 of this subchapter. This demonstration must include: An explanation of the roles and responsibilities of the local governments involved; how construction and operation and maintenance of the facilities will be financed; a current estimate of the cost of the facilities; and a calculation of the annual costs per household. It must also include a written certification signed by the applicant that the applicant has analyzed the costs and financial impacts of the proposed facilities, and that it has the capability to finance and manage their building and operation and maintenance in accordance with this regulation;

(3) Certify that it has not violated any Federal, State or local law pertaining to fraud, bribery, graft, kickbacks, collusion, conflict of interest or other unlawful or corrupt practice relating to or in connection with facilities planning or design work on a wastewater treatment works project.

(4) Indicate the level of participation for minority and women's business enterprises during facilities planning and design of the project.

(b) Federal assistance made available by the Farmers Home Administration may be used to provide the non-Federal share of the project's cost.

(Approved by the Office of Management and Budget under control number 2040–0027)

[49 FR 6234, Feb. 17, 1984, as amended at 55 FR 27097, June 29, 1990]

§ 35.2105 Debarment and suspension.

The applicant shall indicate whether it used the services of any individual, organization, or unit of government for facilities planning or design work whose name appears on the master list of debarments, suspensions, and voluntary exclusions. See 40 CFR 32.400. If the applicant indicates it has used the services of a debarred individual or

firm, EPA will closely examine the facilities plan, design drawings and specifications to determine whether to award a grant. EPA will also determine whether the applicant should be found non-responsible under part 30 of this subchapter or be the subject of possible debarment or suspension under part 32 of this subchapter.

§ 35.2106 Plan of operation.

The applicant shall submit a draft plan of operation that addresses development of: An operation and maintenance manual; an emergency operating program; personnel training; an adequate budget consistent with the user charge system approved under § 35.2140; operational reports; laboratory testing needs; and an operation and maintenance program for the complete waste treatment system.

§ 35.2107 Intermunicipal service agreements.

If the project will serve two or more municipalities, the applicant shall submit the executed intermunicipal agreements, contracts or other legally binding instruments necessary for the financing, building and operation of the proposed treatment works. At a minimum they must include the basis upon which costs are allocated, the formula by which costs are allocated, and the manner in which the cost allocation system will be administered. The Regional Administrator may waive this requirement provided the applicant can demonstrate:

(a) That such an agreement is already in place; or

(b) Evidence of historic service relationships for water supply, wastewater or other services between the affected communities regardless of the existence of formal agreements, and

(c) That the financial strength of the supplier agency is adequate to continue the project, even if one of the proposed customer agencies fails to participate.

(Approved by the Office of Management and Budget under control number 2040–0027)

§ 35.2108 Phased or segmented treatment works.

Grant funding may be awarded for a phase or segment of a treatment works, subject to the limitations of § 35.2123, although that phase or segment does not result in compliance with the enforceable requirements of the Act, provided:

(a) The grant agreement requires the recipient to make the treatment works of which the phase or segment is a part operational and comply with the enforceable requirements of the Act according to a schedule specified in the grant agreement regardless of whether grant funding is available for the remaining phases and segments; and

(b) Except in the case of a grant solely for the acquisition of eligible real property, one or more of the following conditions exist:

(1) The Federal share of the cost of building the treatment works would require a disproportionate share of the State's annual allotment relative to other needs or would require a major portion of the State's annual allotment;

(2) The period to complete the building of the treatment works will cover three years or more;

(3) The treatment works must be phased or segmented to meet the requirements of a Federal or State court order; or

(4) The treatment works is being phased or segmented to build only the less-than-secondary facility pending a final decision on the applicant's request for a secondary treatment requirement waiver under section 301(h) of the Act.

[49 FR 6234, Feb. 17, 1984, as amended at 50 FR 45895, Nov. 4, 1985]

§ 35.2109 Step 2+3.

The Regional Administrator may award a Step 2+3 grant which will provide the Federal share of an allowance under appendix B and the estimated allowable cost of the project only if:

(a) The population of the applicant municipality is 25,000 or less according to the most recent U.S. Census;

(b) The total Step 3 building cost is estimated to be $8 million or less; and

(c) The project is not for a treatment works phase or segment.

§ 35.2110 Access to individual systems.

Applicants for privately owned individual systems shall provide assurance

of access to the systems at all reasonable times for such purposes as inspection, monitoring, building, operation, rehabilitation and replacement.

§ 35.2111 Revised water quality standards.

After December 29, 1984, no grant can be awarded for projects that discharge into stream segments which have not, at least once since December 29, 1981, had their water quality standards reviewed and revised or new standards adopted, as appropriate, under section 303(c) of the Act, unless:

(a) The State has in good faith submitted such water quality standards and the Regional Administrator has failed to act on them within 120 days of receipt;

(b) The grant assistance is for the construction of non-discharging land treatment or containment ponds; or

(c) The grant assistance is a State program grant awarded under section 205(g) or 205(j) of the Act.

[50 FR 45895, Nov. 4, 1985]

§ 35.2112 Marine discharge waiver applicants.

If the applicant is also an applicant for a secondary treatment requirement waiver under section 301(h) of the Act, a plan must be submitted which contains a modified scope of work, a schedule for completion of the less-than-secondary facility and an estimate of costs providing for building the proposed less-than-secondary facilities, including provisions for possible future additions of treatment processes or techniques to meet secondary treatment requirements.

§ 35.2113 Environmental review.

(a) The environmental review required by part 6 of this chapter must be completed before submission of any application. The potential applicant should work with the State and EPA as early as possible in the facilities planning process to determine if the project qualifies for a categorical exclusion from part 6 requirements, or whether a finding of no significant impact or an environmental impact statement is required.

(b) In conjunction with the facilities planning process as described in § 35.2030(c), a potential applicant may request, in writing, that EPA make a formal determination under part 6 of this chapter.

§ 35.2114 Value engineering.

(a) If the project has not received Step 2 grant assistance the applicant shall conduct value engineering if the total estimated cost of building the treatment works is more than $10 million.

(b) The value engineering recommendations shall be implemented to the maximum extent feasible.

(Approved by the Office of Management and Budget under control number 2040–0027)

§ 35.2116 Collection system.

Except as provided in § 35.2032(c), if the project involves collection system work, such work:

(a) Shall be for the replacement or major rehabilitation of an existing collection system which was not build with Federal funds awarded on or after October 18, 1972, and shall be necessary to the integrity and performance of the complete waste treatment system; or

(b) Shall be for a new cost-effective collection system in a community in existence on October 18, 1972, which has sufficient existing or planned capacity to adequately treat such collected wastewater and where the bulk (generally two-thirds) of the expected flow (flow from existing plus future residential users) will be from the resident population on October 18, 1972. The expected flow will be subject to the limitations for interceptors contained in § 35.2123. If assistance is awarded, the grantee shall provide assurances that the existing population will connect to the collection system within a reasonable time after project completion.

§ 35.2118 Preaward costs.

(a) EPA will not award grant assistance for Step 2+3 and Step 3 work performed before award of grant assistance for that project, except:

(1) In emergencies or instances where delay could result in significant cost increases, the Regional Administrator may approve preliminary building work (such as procurement of major equipment requiring long lead times,

field testing of innovative and alternative technologies, minor sewer rehabilitation, acquisition of eligible land or an option for the purchase of eligible land or advance building on minor portions of treatment works) after completion of the environmental review as required by § 35.2113.

(2) If the Regional Administrator approves preliminary Step 3 work, such approval is not an actual or implied commitment of grant assistance and the applicant proceeds at its own risk.

(b) Any procurement is subject to the requirements of 40 CFR part 33, and in the case of acquisition of eligible real property, 40 CFR part 4.

(Approved by the Office of Management and Budget under control number 2040–0027)

[49 FR 6234, Feb. 17, 1984, as amended at 55 FR 27097, June 29, 1990]

§ 35.2120 Infiltration/Inflow.

(a) *General.* The applicant shall demonstrate to the Regional Administrator's satisfaction that each sewer system discharging into the proposed treatment works project is not or will not be subject to excessive infiltration/inflow. For combined sewers, inflow is not considered excessive in any event.

(b) *Inflow.* If the rainfall induced peak inflow rate results or will result in chronic operational problems during storm events, or the rainfall-induced total flow rate exceeds 275 gpcd during storm events, the applicant shall perform a study of the sewer system to determine the quantity of excessive inflow and to propose a rehabilitation program to eliminate the excessive inflow. All cases in which facilities are planned for the specific storage and/or treatment of inflow shall be subject to a cost-effectiveness analysis.

(c) *Infiltration.* (1) If the flow rate at the existing treatment facility is 120 gallons per capita per day or less during periods of high groundwater, the applicant shall build the project including sufficient capacity to transport and treat any existing infiltration. However, if the applicant believes any specific portion of its sewer system is subject to excessive infiltration, the applicant may confirm its belief in a cost-effectiveness analysis and propose a sewer rehabilitation program to eliminate that specific excessive infiltration.

(2) If the flow rate at the existing treatment facility is more than 120 gallons per capita per day during periods of high groundwater, the applicant shall either:

(i) Perform a study of the sewer system to determine the quantity of excessive infiltration and to propose a sewer rehabilitation program to eliminate the excessive infiltration; or

(ii) If the flow rate is not significantly more than 120 gallons per capita per day, request the Regional Administrator to determine that he may proceed without further study, in which case the allowable project cost will be limited to the cost of a project with a capacity of 120 gallons per capita per day under Appendix A.G.2.a.

(Approved by the Office of Management and Budget under control number 2040–0027)

[49 FR 6234, Feb. 17, 1984, as amended at 50 FR 45895, Nov. 4, 1985]

§ 35.2122 Approval of user charge system and proposed sewer use ordinance.

If the project is for Step 3 grant assistance, unless it is solely for acquisition of eligible land, the applicant must obtain the Regional Administrator's approval of its user charge system (§ 35.2140) and proposed (or existing) sewer use ordinance § 35.2130). If the applicant has a sewer use ordinance or user charge system in affect, the applicant shall demonstrate to the Regional Administrator's satisfaction that they meet the requirements of this part and are being enforced.

(Approved by the Office of Management and Budget under control number 2040–0027)

§ 35.2123 Reserve capacity.

EPA will limit grant assistance for reserve capacity as follows:

(a) If EPA awarded a grant for a Step 3 interceptor segment before December 29, 1981, EPA may award grants for remaining interceptor segments included in the facilities plan with reserve capacity as planned, up to 40 years.

(b) Except as provided in paragraph (a) of this section, if EPA awards a grant for a Step 3 or Step 3 segment of a primary, secondary, or advanced treatment facility or its interceptors

included in the facilities plan before October 1, 1984, the grant for that Step 3 or Step 3 segment, and any remaining segments, may include 20 years reserve capacity.

(c) Except as provided in paragraph (b) of this section, after September 30, 1984, no grant shall be made to provide reserve capacity for a project for secondary treatment or more stringent treatment or new interceptors and appurtenances. Grants for such projects shall be based on capacity necessary to serve existing needs (including existing needs of residential, commercial, industrial, and other users) as determined on the date of the approval of the Step 3 grant. Grant assistance awarded after September 30, 1990 shall be limited to the needs existing on September 30, 1990.

(d) For any application with capacity in excess of that provided by this section:

(1) All incremental costs shall be paid by the applicant. Incremental costs include all costs which would not have been incurred but for the additional excess capacity, i.e., any cost in addition to the most cost-effective alternative with eligible reserve capacity described under paragraphs (a) and (b) of this section.

(2) It must be determined that the actual treatment works to be built meets the requirements of the National Environmental Policy Act and all applicable laws and regulations.

(3) The Regional Administrator shall approve the plans, specifications and estimates for the actual treatment works.

(4) The grantee shall assure the Regional Administrator satisfactorily that it has assessed the costs and financial impacts of the actual treatment works and has the capability to finance and manage their construction and operation.

(5) The grantee must implement a user charge system which applies to the entire service area of the grantee.

(6) The grantee shall execute appropriate grant conditions or releases protecting the Federal Government from any claim for any of the costs of construction due to the additional capacity.

§ 35.2125 Treatment of wastewater from industrial users.

(a) Grant assistance shall not be provided for a project unless the project is included in a complete waste treatment system and the principal purpose of both the project and the system is for the treatment of domestic wastewater of the entire community, area, region or district concerned.

(b) Allowable project costs do not include:

(1) Costs of interceptor or collector sewers constructed exclusively, or almost exclusively, to serve industrial users; or

(2) Costs for control or removal of pollutants in wastewater introduced into the treatment works by industrial users, unless the applicant is required to remove such pollutants introduced from nonindustrial users.

§ 35.2127 Federal facilities.

Grant assistance shall not be provided for costs to transport or treat wastewater produced by a facility that is owned and operated by the Federal Government which contributes more than 250,000 gallons per day or 5 percent of the design flow of the complete waste treatment system, whichever is less.

(Approved by the Office of Management and Budget under control number 2040–0027)

§ 35.2130 Sewer use ordinance.

The sewer use ordinance (see also §§35.2122 and 35.2208) or other legally binding document shall prohibit any new connections from inflow sources into the treatment works and require that new sewers and connections to the treatment works are properly designed and constructed. The ordinance or other legally binding document shall also require that all wastewater introduced into the treatment works not contain toxics or other pollutants in amounts or concentrations that endanger public safety and physical integrity of the treatment works; cause violation of effluent or water quality limitations; or preclude the selection of the most cost-effective alternative for

wastewater treatment and sludge disposal.

(Approved by the Office of Management and Budget under control number 2040–0027)

§ 35.2140 User charge system.

The user charge system (see §§35.2122 and 35.2208) must be designed to produce adequate revenues required for operation and maintenance (including replacement). It shall provide that each user which discharges pollutants that cause an increase in the cost of managing the effluent or sludge from the treatment works shall pay for such increased cost. The user charge system shall be based on either actual use under paragraph (a) of this section, ad valorem taxes under paragraph (b) of this section, or a combination of the two.

(a) *User charge system based on actual use.* A grantee's user charge system based on actual use (or estimated use) of wastewater treatment services shall provide that each user (or user class) pays its proportionate share of operation and maintenance (including replacement) costs of treatment works within the grantee's service area, based on the user's proportionate contribution to the total wastewater loading from all users (or user classes).

(b) *User charge system based on ad valorem taxes.* A grantee's user charge system which is based on ad valorem taxes may be approved if:

(1) On December 27, 1977, the grantee had in existence a system of dedicated ad valorem taxes which collected revenues to pay the cost of operation and maintenance of wastewater treatment works within the grantee's service area and the grantee has continued to use that system;

(2) The ad valorem user charge system distributes the operation and maintenance (including replacement) costs for all treatment works in the grantee's jurisdiction to the residential and small non-residential user class (including at the grantee's option non-residential, commercial and industrial users that introduce no more than the equivalent of 25,000 gallons per day of domestic sanitary wastes to the treatment works), in proportion to the use of the treatment works by this class; and

(3) Each member of the industrial user and commercial user class which discharges more than 25,000 gallons per day of sanitary waste pays its share of the costs of operation and maintenance (including replacement) of the treatment works based upon charges for actual use.

(c) *Notification.* Each user charge system must provide that each user be notified, at least annually, in conjunction with a regular bill (or other means acceptable to the Regional Administrator), of the rate and that portion of the user charges or ad valorem taxes which are attributable to wastewater treatment services.

(d) *Financial management system.* Each user charge system must include an adequate financial management system that will accurately account for revenues generated by the system and expenditures for operation and maintenance (including replacement) of the treatment system, based on an adequate budget identifying the basis for determining the annual operation and maintenance costs and the costs of personnel, material, energy and administration.

(e) *Charges for operation and maintenance for extraneous flows.* The user charge system shall provide that the costs of operation and maintenance for all flow not directly attributable to users (i.e., infiltration/inflow) be distributed among all users based upon either of the following:

(1) In the same manner that it distributes the costs for their actual use, or

(2) Under a system which uses one or any combination of the following factors on a reasonable basis:

(i) Flow volume of the users;

(ii) Land area of the users;

(iii) Number of hookups or discharges of the users;

(iv) Property valuation of the users, if the grantee has an approved user charge system based on ad valorem taxes.

(f) After completion of building a project, revenue from the project (e.g., sale of a treatment-related by-product; lease of the land; or sale of crops grown on the land purchased under the grant agreement) shall be used to offset the costs of operation and maintenance.

The grantee shall proportionately reduce all user charges.

(g) *Adoption of system.* One or more municipal legislative enactments or other appropriate authority must incorporate the user charge system. If the project accepts wastewater from other municipalities, the subscribers receiving waste treatment services from the grantee shall adopt user charge systems in accordance with this section. These user charge systems shall also be incorporated in appropriate municipal legislative enactments or other appropriate authority of all municipalities contributing wastes to the treatment works.

(h) *Inconsistent agreements.* The user charge system shall take precedence over any terms or conditions of agreements or contracts which are inconsistent with the requirements of section 204(b)(1)(A) of the Act and this section.

(i) *Low income residential user rates.* (1) Grantees may establish lower user charge rates for low income residential users after providing for public notice and hearing. A low income residential user is any residence with a household income below the Federal poverty level as defined in 45 CFR 1060.2 or any residence designated as low income under State law or regulation.

(2) Any lower user charge rate for low income residential users must be defined as a uniform percentage of the user charge rate charged other residential users.

(3) The costs of any user charge reductions afforded a low income residential class must be proportionately absorbed by all other user classes. The total revenue for operation and maintenance (including equipment replacement) of the facilities must not be reduced as a result of establishing a low income residential user class.

(Approved by the Office of Management and Budget under control number 2040–0027)

[49 FR 6234, Feb. 17, 1984, as amended at 55 FR 27097, June 29, 1990]

§ 35.2152 Federal share.

(a) *General.* The Federal share for each project shall be based on the sum of the total Step 3 or Step 7 allowable costs and the allowance established in the grant agreement under appendix B. Except as provided elsewhere in this section, the Federal share shall be:

(1) 75 percent for grant assistance awarded before October 1, 1984;

(2) 55 percent for grant assistance awarded after September 30, 1984, except as provided in paragraph (a)(3) of this section; and

(3) Subject to paragraphs (c) and (d) of this section, 75 percent for grant assistance awarded after September 30, 1984 and before October 1, 1990, for sequential phases or segments of a primary, secondary, or advanced treatment facility or its interceptors, or infiltration/inflow correction provided:

(i) The treatment works being phased or segmented is described in a facilities plan approved by the Regional Administrator before October 1, 1984;

(ii) The Step 3 grant for the initial phase or segment of the treatment works described in (a)(3)(i) of this section is awarded prior to October 1, 1984; and

(iii) The phase or segment that receives 75 percent funding is necessary to (A) make a phase or segment previously funded by EPA operational and comply with the enforceable requirements of the Act, or (B) complete the treatment works referenced in (a)(3)(i) of this section provided that all phases or segments previously funded by EPA are operational and comply with the enforceable requirements of the Act.

(b) *Innovative and alternative technology.* In accordance with § 35.2032, the Federal share for eligible treatment works or unit processes and techniques that the Regional Administrator determines meet the definition of innovative or alternative technology shall be 20 percent greater than the Federal share under paragraph (a) or (c) of this section, but in no event shall the total Federal share be greater than 85 percent. This increased Federal share depends on the availability of funds from the reserve under § 35.2020. The proportional State contribution to the non-Federal share of building costs for I/A projects must be the same as or greater than the proportional State contribution (if any) to the non-Federal share of eligible building costs for all treatment works which receive 75 or 55 percent grants or such other Federal share

under paragraph (c) of this section in the State.

(c) A project for which an application for grant assistance has been made before October 1, 1984, but which was under judicial injunction at that time prohibiting its construction, shall be eligible for a grant at 75 percent of the cost of its construction.

(d) *Uniform lower Federal share.* (1) Except as provided in § 35.2032 (c) and (d) of this section, the Governor of a State may request the Regional Administrator's approval to revise uniformly throughout the State the Federal share of grant assistance for all future projects. The revised Federal share must apply to all needs categories (see § 35.2015(b)(2)).

(2) After EPA awards grant assistance for a project, the Federal share shall be the same for any grant increase that is within the scope of the project.

(3) The uniform lower Federal share established by the Governor does not apply to projects funded under § 35.2024(b).

(e) *Training facilities.* The Federal share of treatment works required to train and upgrade waste treatment works operations and maintenance personnel may be up to 100 percent of the allowable cost of the project.

(1) Where a grant is made to serve two or more States, the Administrator is authorized to make an additional grant for a supplemental facility in each State. The Federal funds awarded to any State under section 109(b) for all training facilities shall not exceed $500,000.

(2) Any grantee who received a grant under section 109(b) before December 27, 1977, may have the grant increased up to $500,000 by funds made available under the Act, not to exceed 100 percent of the allowable costs.

(Approved by the Office of Management and Budget under control number 2040–0027)

[49 FR 6234, Feb. 17, 1984, as amended at 50 FR 45896, Nov. 4, 1985; 55 FR 27097, June 29, 1990]

§ 35.2200 Grant conditions.

In addition to the EPA General Grant Conditions (part 30 of this subchapter), each treatment works grant shall be subject to the conditions under §§ 35.2202 through 35.2218.

§ 35.2202 Step 2+3 projects.

(a) Prior to initiating action to acquire eligible real property, a Step 2+3 grantee shall submit for Regional Administrator review and written approval the information required under § 35.2040(b)(7).

(b) Before initiating procurement action for the building of the project, a Step 2+3 grantee shall submit for the Regional Administrator's review and written approval the information required under §§ 35.2040(b) (5) and (6), 35.2106, 35.2107, 35.2130 and 35.2140.

§ 35.2203 Step 7 projects.

(a) Prior to initiating action to acquire real property, a Step 7 grantee shall submit for Regional Administrator review and written approval the information required under § 35.2040(b)(7).

(b) Before approving a Step 7 grant amendment under § 25.2036, the Regional Administrator shall determine that the applicant and its project have met the requirements of §§ 35.2040(b)(6) and (g), 35.2106, 35.2107, and 35.2122.

[55 FR 27097, June 29, 1990]

§ 35.2204 Project changes.

(a) Minor changes in the project work that are consistent with the objectives of the project and within the scope of the grant agreement do not require the execution of a formal grant amendment before the grantee's implementation of the change. However, the amount of the funding provided by the grant agreement may only be increased by a formal grant amendment.

(b) The grantee must receive from the Regional Administrator a formal grant amendment before implementing changes which:

(1) Alter the project performance standards;

(2) Alter the type of wastewater treatment provided by the project;

(3) Significantly delay or accelerate the project schedule;

(4) Substantially alter the facilities plan, design drawings and specifications, or the location, size, capacity, or

quality of any major part of the project; or

(5) Otherwise require a formal grant amendment under part 30 of this subchapter.

(c) Notwithstanding paragraph (a) of this section, changes to Step 7 projects cannot increase the amount of EPA assistance established at the time of the grant amendment.

[49 FR 6234, Feb. 17, 1984, as amended at 55 FR 27097, June 29, 1990]

§ 35.2205 Maximum allowable project cost.

(a) *Grants awarded on or after the effective date of this regulation.* Except as provided in paragraph (c) of this section, for Step 2+3 or Step 3 grants awarded on or after the effective date of this regulation, the maximum allowable project cost will be the sum of:

(1) The allowable cost of the following:

(i) The initial award amount of all project subagreements between the grantee and its contractors;

(ii) The initial amounts approved for force account work to be performed on the project;

(iii) The purchase price of eligible real property; and

(iv) The initial amount approved for project costs not included under paragraphs (a)(1)(i) through (a)(1)(iii) of this section, excluding any amounts approved for an allowance under § 35.2025 and for contingencies; and

(2) Five percent of the sum of the amounts included under paragraphs (a)(1)(i) through (a)(1)(iv) of this section.

(b) *Grants awarded before the effective date of the regulation.* Except as provided in paragraph (c) of this section, for Step 2+3 or Step 3 grants awarded before the effective date of this regulation, the maximum allowable increase in the cost for work covered by each subagreement finally advertised or, where there will be no advertisement, each subagreement awarded on or after the effective date of this regulation will be five percent of the initial award amount of the subagreement.

(c) *Differing site conditions.* In determining whether the maximum allowable project cost or increase in subagreement cost will be exceeded, costs of equitable adjustments for differing site conditions will be exempt, provided the requirements of 40 CFR part 35, subpart I, Appendix A, paragraph A.1.g. and all other applicable laws and regulations have been met.

[50 FR 46649, Nov. 12, 1985]

§ 35.2206 Operation and maintenance.

(a) The grantee must assure economical and effective operation and maintenance (including replacement) of the treatment works.

(b) Except as provided in paragraphs (c) (1) and (2) of this section, the Regional Administrator shall not pay more than 50 percent of the Federal share of any project unless the grantee has furnished and the Regional Administrator has approved the final plan of operation required by § 35.2106, and shall not pay more than 90 percent of the Federal share of any project unless the grantee has furnished and the Regional Administrator has approved an operation and maintenance manual.

(c)(1) In projects where segmenting of a proposed treatment works has occurred, the Regional Administrator shall not pay more than 90 percent of the Federal share of the total allowable costs of the proposed treatment works until the grantee has furnished and the Regional Administrator has approved an operation and maintenance manual.

(2) In projects where a component is placed in operation before completion of the entire project, the Regional Administrator shall not make any additional payment on that project until a final operation and maintenance manual for the operating component is furnished and approved.

(Approved by the Office of Management and Budget under control number 2040–0027)

§ 35.2208 Adoption of sewer use ordinance and user charge system.

The grantee shall adopt its sewer use ordinance and implement its user charge system developed under §§ 35.2130 and 35.2140 before the treatment works is placed in operation. Further, the grantee shall implement the user charge system and sewer use ordinance for the useful life of the treatment works.

§35.2210 Land acquisition.

The grantee shall not acquire real property determined allowable for grant assistance until the Regional Administrator has determined that applicable provisions of 40 CFR part 4 have been met.

§35.2211 Field testing for Innovative and Alternative Technology Report.

The grantee shall submit a report containing the procedure, cost, results and conclusions of any field testing. The report shall be submitted to the Regional Administrator in accordance with a schedule to be specified in the grant agreement.

(Approved by the Office of Management and Budget under control number 2040–0027)

§35.2212 Project initiation.

(a) The grantee shall expeditiously initiate and complete the project, in accordance with the project schedule contained in the grant application and agreement. Failure to promptly initiate and complete a project may result in the imposition of sanctions under part 30 of this chapter.

(b) The grantee shall initiate procurement action for building the project promptly after award of a Step 3 grant or, after receiving written approval of the information required under §35.2202 under a Step 2+3 grant or, for a Step 7 project, after completing the facilities plan and the preparation of a pre-bid package that is sufficiently detailed to insure that the bids received form the design/build work will be complete, accurate, comparable and will result in a cost-effective operable facility. Public notice of proposed procurement action should be made promptly after Step 3 award or after final approvals for a Step 2+3 grant under §35.2202, or after completing the pre-bid package for the Step 7 award. The grantee shall award the subagreement(s) and issue notice(s) to proceed, where required, for building all significant elements of the project within twelve months of the Step 3 award or final Step 2+3 approvals.

(c) Failure to promptly award all subagreement(s) for building the project will result in a limitation on allowable costs. (See Appendixes A, A.2.e.).

(d) The grantee shall notify the Regional Administrator immediately upon award of the subagreement(s) for building all significant elements of the project (see 40 CFR 33.211).

(Approved by the Office of Management and Budget under control number 2040–0027)

[49 FR 6234, Feb. 17, 1984, as amended at 55 FR 27097, June 29, 1990]

§35.2214 Grantee responsibilities.

(a) The grantee shall complete the project in accordance with the grant agreement including: The facilities plan that establishes the need for the project; the design drawings and specifications; the plan of operation under §35.2106 that identifies the basis to determine annual operating costs; the financial management system under §35.2140(d) that adequately accounts for revenues and expenditures; the user charge system under §35.2140 that will generate sufficient revenue to operate and maintain the treatment works; the project schedule; and all other applicable regulations. The grantee shall maintain and operate the project to meet project performance standards including the enforceable requirements of the Act for the design life.

(b) The grantee shall provide the architectural and engineering services and other services necessary to fulfill the obligation in paragraph (a) of this section.

§35.2216 Notice of building completion and final inspection.

The grantee shall notify the Regional Administrator when the building of the project is complete. Final inspection shall be made by the Regional Administrator after receipt of the notice of building completion.

(Approved by the Office of Management and Budget under control number 2040–0027)

§35.2218 Project performance.

(a) The grantee shall notify the Regional Administrator in writing of the actual date of initiation of operation.

(b) Subject to the provisions of 40 CFR part 33, the grantee shall select

the engineer or engineering firm principally responsible for either supervising construction or providing architectural and engineering services during construction as the prime engineer to provide the following services during the first year following the initiation of operation:

(1) Direct the operation of the project and revise the operation and maintenance manual as necessary to accommodate actual operating experience;

(2) Train or provide for training of operating personnel and prepare curricula and training material for operating personnel; and

(3) Advise the grantee whether the project is meeting the project performance standards.

(c) On the date one year after the initiation of operation of the project, the grantee shall certify to the Regional Administrator whether the project meets the project performance standards. If the Regional Administrator or the grantee concludes that the project does not meet the project performance standards, the grantee shall submit the following:

(1) A corrective action report which includes an analysis of the cause of the project's failure to meet the performance standards (including the quantity of infiltration/inflow proposed to be eliminated), and an estimate of the nature, scope and cost of the corrective action necessary to bring the project into compliance;

(2) The schedule for undertaking in a timely manner the corrective action necessary to bring the project into compliance; and

(3) The scheduled date for certifying to the Regional Administrator that the project is meeting the project performance standards.

(d) Except as provided in § 35.2032(c) the grantee shall take corrective action necessary to bring a project into compliance with the project performance standards at its own expense. This limitation on Federal funding for corrective actions does not apply to training funds under section 104(g)(1) of the Act.

(e) Nothing in this section:

(1) Prohibits a grantee from requiring more assurances, guarantees, or indemnity or other contractual requirements from any party performing project work; or

(2) Affects EPA's right to take remedial action, including enforcement, against a grantee that fails to carry out its obligations under § 35.2214.

(Approved by the Office of Management and Budget under control number 2040–0027)

[49 FR 6234, Feb. 17, 1984, as amended at 55 FR 27098, June 29, 1990]

§ 35.2250 Determination of allowable costs.

The Regional Administrator will determine the allowable costs of the project based on applicable provisions of laws and regulations, the scope of the approved project, § 30.705 of this subchapter, and Appendix A of this subpart.

§ 35.2260 Advance purchase of eligible land.

In the case of grant assistance awarded solely for the acquisition of eligible land, the following provisions are deferred until the award of the ensuing Step 3 assistance for the building of facilities: §§ 35.2105, 35.2130, 35.2140, 35.2206 and 35.2208.

§ 35.2262 Funding of field testing.

In the case of grant assistance for field testing of innovative or alternative wastewater process and techniques, the following provisions are deferred until the award of assistance for building the approved facilities: §§ 35.2105, 35.2106, 35.2122, 35.2130, 35.2140, 35.2206, and 35.2208.

§ 35.2300 Grant payments.

Except as provided in § 35.2206, the Regional Administrator shall pay the Federal share of the allowance under § 35.2025 and the allowable project costs incurred to date and currently due and payable by the grantee, as certified in the grantee's most recent payment request.

(a) *Adjustment.* The Regional Administrator may at any time review and audit requests for payment and payments and make appropriate adjustments as provided in part 30 of this chapter.

(b) *Refunds, rebates and credits.* The Federal share of any refunds, rebates, credits, or other amounts (including

any interest) that accrue to or are received by the grantee for the project, and that are properly allocable to costs for which the grantee has been paid under a grant, must be credited to the current State allotment or paid to the United States. Examples include rebates for prompt payment and sales tax refunds. Reasonable expenses incurred by the grantee securing such refunds, rebates, credits, or other amounts shall be allowable under the grant when approved by the Regional Administrator.

(c) *Release.* By its acceptance of final payment, the grantee releases and discharges the United States, its officers, agents, and employees from all liabilities, obligations, and claims arising out of the project work or under the grant, subject only to exceptions previously specified in writing between the Regional Administrator and the grantee.

(d) *Payment of costs incurred under the Uniform Relocation Assistance and Real Property Acquisition Policies Act.* Notwithstanding the provisions of the introductory paragraph of this section, if the Regional Administrator determines it is necessary for the expeditious completion of a project, he may make advance payment after grant award for the Federal share of the eligible cost of any payment of relocation assistance under §4.502(c) of this chapter by the grantee. The requirements in part 30 of this subchapter apply to any advances of funds for assistance payments.

(e) *Payment under grants to States for advances of allowance*—(1) *Advance payment to State.* Notwithstanding the provisions of the introductory paragraph of this section, the Regional Administrator, under a State grant for advances of allowance (see §35.2025), may make payments on an advance or letter-of-credit payment method in accordance with the requirements under part 30 of this chapter. The State and the Regional Administrator shall agree to the payment terms.

(2) *Assignment.* If the State chooses to assign its payments to a potential grant applicant, it shall execute an agreement with the potential grant applicant authorizing direct payment from EPA and establishing appropriate terms for payment. The State shall provide a copy of the agreement to EPA.

(f) *Design/build projects.* For design/build projects, the Regional Administrator shall not pay more than 95 percent of the grant amount until completion of building and the RA's final project approval (see §35.2036(a)(6)).

(Approved by the Office of Management and Budget under control number 2040–0027)

[49 FR 6234, Feb. 17, 1984, as amended at 55 FR 27098, June 29, 1990]

§35.2350 Subagreement enforcement.

(a) *Regional Administrator authority.* At the grantee's request the Regional Administrator may provide technical and legal assistance in the administration and enforcement of any subagreement related to treatment works for which an EPA grant was made and to intervene in any civil action involving the enforcement of such subagreements, including subagreement disputes which are the subject of either arbitration or court action.

(b) *Privity of subagreement.* The Regional Administrator's technical or legal involvement in any subagreement dispute will not make EPA a party to any subagreement entered into by the grantee.

(c) *Grantee responsibilities.* The provision of technical or legal assistance under this section in no way releases the grantee from its obligations under §35.2214, or affects EPA's right to take remedial action, including enforcement, against a grantee that fails to carry out those obligations.

APPENDIX A—DETERMINATION OF ALLOWABLE COSTS

(a) *Purpose.* The information in this appendix represents Agency policies and procedures for determining the allowability of project costs based on the Clean Water Act, EPA policy, appropriate Federal cost principles under part 30 of this subchapter and reasonableness.

(b) *Applicability.* This cost information applies to grant assistance awarded on or after the effective date of this regulation. Project cost determinations under this subpart are not limited to the items listed in this appendix. Additional cost determinations based on applicable law and regulations must of course be made on a project-by-project basis. Those cost items not previously included in program requirements are not mandatory for

decisions under grants awarded before the effective date. They are only to be used as guidance in those cases.

A. Costs Related to Subagreements

1. Allowable costs related to sub- agreements include:

a. The costs of subagreements for building the project.

b. The costs of complying with the procurement requirements of part 33 of this subchapter, other than the costs of self-certification under §33.110.

c. The cost of legal and engineering services incurred by grantees in deciding procurement protests and defending their decisions in protest appeals under subpart G of 40 CFR part 33.

d. The costs for establishing or using minority and women's business liaison services.

e. The costs of services incurred during the building of a project to ensure that it is built in conformance with the design drawings and specifications.

f. The costs (including legal, technical, and administrative costs) of assessing the merits of or negotiating the settlement of a claim by or against a grantee under a subagreement provided:

(1) The claim arises from work within the scope of the grant;

(2) A formal grant amendment is executed specifically covering the costs before they are incurred;

(3) The costs are not incurred to prepare documentation that should be prepared by the contractor to support a claim against the grantee; and

(4) The Regional Administrator determines that there is a significant Federal interest in the issues involved in the claim.

g. Change orders and the costs of meritorious contractor claims for increased costs under subagreements as follows:

(1) Change orders and the costs of meritorious contractor claims provided the costs are:

(i) Within the scope of the project;

(ii) Not caused by the grantee's mismanagement; and

(iii) Not caused by the grantee's vicarious liability for the improper actions of others.

(2) Provided the requirements of paragraph g(1) are met, the following are examples of allowable change orders and contractor claim costs:

(i) Building costs resulting from defects in the plans, design drawings and specifications, or other subagreement documents only to the extent that the costs would have been incurred if the subagreement documents on which the bids were based had been free of the defects, and excluding the costs of any rework, delay, acceleration, or disruption caused by such defects;

(ii) Costs of equitable adjustments under Clause 4, Differing Site Conditions, of the model subagreement clauses required under §33.1030 of this Subchapter.

(3) Settlements, arbitration awards, and court judgments which resolve contractor claims shall be reviewed by the grant award official and shall be allowable only to the extent that they meet the requirements of paragraph g(1), are reasonable, and do not attempt to pass on to EPA the cost of events that were the responsibility of the grantee, the contractor, or others.

h. The costs of the services of the prime engineer required by §35.2218 during the first year following initiation of operation of the project.

i. The cost of development of a plan of operation including an operation and maintenance manual required by §35.2106.

j. Start-up services for onsite training of operating personnel in operation and control of specific treatment processes, laboratory procedures, and maintenance and records management.

k. The specific and unique costs of field testing an innovative or alternative process or technique, which may include equipment leasing costs, personnel costs, and utility costs necessary for constructing, conducting, and reporting the results of the field test.

2. Unallowable costs related to sub- agreements include:

a. The costs of architectural or engineering services incurred in preparing a facilities plan and the design drawings and specifications for a project. This provision does not apply to planning and design costs incurred in the modification or replacement of an innovative or alternative project funded under §35.2032(c).

b. Except as provided in 1.g. above, architectural or engineering services or other services necessary to correct defects in a facilities plan, design drawings and specifications, or other subagreement documents.

c. The costs (including legal, technical and administrative) of defending against a contractor claim for increased costs under a subagreement or of prosecuting a claim to enforce any subagreement unless:

(1) The claim arises from work within the scope of the grant;

(2) A formal grant amendment is executed specifically covering the costs before they are incurred;

(3) The claim cannot be settled without arbitration or litigation;

(4) The claim does not result from the grantee's mismanagement;

(5) The Regional Administrator determines that there is a significant Federal interest in the issues involved in the claim; and

(6) In the case of defending against a contractor claim, the claim does not result from the grantee's responsibility for the improper action of others.

d. Bonus payments, not legally required, for completion of building before a contractual completion date.

e. All incremental costs due to the award of any subagreements for building significant elements of the project more than 12 months after the Step 3 grant award or final Step 2+3 approvals unless specified in the project schedule approved by the Regional Administrator at the time of grant award.

B. Mitigation

1. Allowable costs include:

a. Costs necessary to mitigate only direct, adverse, physical impacts resulting from building of the treatment works.

b. The costs of site screening necessary to comply with NEPA related studies and facilities plans, or necessary to screen adjacent properties.

c. The cost of groundwater monitoring facilities necessary to determine the possibility of groundwater deterioration, depletion or modification resulting from building the project.

2. Unallowable costs include:

a. The costs of solutions to aesthetic problems, including design details which require expensive building techniques and architectural features and hardware, that are unreasonable or substantially higher in cost than approvable alternatives and that neither enhance the function or appearance of the treatment works nor reflect regional architectural tradition.

b. The cost of land acquired for the mitigation of adverse environmental effects identified pursuant to an environmental review under NEPA.

C. Privately or Publicly Owned Small and Onsite Systems

1. Allowable costs for small and onsite systems serving residences and small commercial establishments inhabited on or before December 27, 1977, include a. through e. below. Alternatively, the two-thirds rule at 40 CFR §35.2116(b) may be used to determine allowable residential flows to be served by publicly owned small and alternative wastewater systems, including a. through e. below:

a. The cost of major rehabilitation, upgrading, enlarging and installing small and onsite systems, but in the case of privately owned systems, only for principal residences.

b. Conveyance pipes from property line to offsite treatment unit which serves a cluster of buildings.

c. Treatment and treatment residue disposal portions of toilets with composting tanks, oil flush mechanisms, or similar in-house devices.

d. Treatment or pumping units from the incoming flange when located on private property and conveyance pipes, if any, to the collector sewer.

e. The cost of restoring individual system building sites to their original condition.

2. Unallowable costs for small and onsite systems include:

a. Modification to physical structure of homes or commercial establishments.

b. Conveyance pipes from the house to the treatment unit located on user's property or from the house to the property line if the treatment unit is not located on that user's property.

c. Wastewater generating fixtures such as commodes, sinks, tubs, and drains.

D. Real Property

1. Allowable costs for land and rights-of-way include:

a. The cost (including associated legal, administrative and engineering costs) of land acquired in fee simple or by lease or easement under grants awarded after October 17, 1972, that will be an integral part of the treatment process or that will be used for the ultimate disposal of residues resulting from such treatment provided the Regional Administrator approves it in the grant agreement. These costs include:

(1) The cost of a reasonable amount of land, considering irregularities in application patterns, and the need for buffer areas, berms, and dikes;

(2) The cost of land acquired for a soil absorption system for a group of two or more homes;

(3) The cost of land acquired for composting or temporary storage of compost residues which result from wastewater treatment;

(4) The cost of land acquired for storage of treated wastewater in land treatment systems before land application. The total land area for construction of a pond for both treatment and storage of wastewater is allowable if the volume necessary for storage is greater then the volume necessary for treatment. Otherwise, the allowable cost will be determined by the ratio of the storage volume to the total volume of the pond.

b. The cost of complying with the requirements of the Uniform Relocation Assistance and Real Property Acquisition Policies Act of 1970 (42 U.S.C. 4621 *et seq.*, 4651 *et seq.*), under part 4 of this chapter for land necessary for the building of treatment works.

c. The cost of contracting with another public agency or qualified private contractor for part or all of the required acquisition and/or relocation services.

d. The cost associated with the preparation of the treatment works site before, during and, to the extent agreed on in the grant agreement, after building. These costs include:

(1) The cost of demolition of existing structures on the treatment works site (including

rights-of-way) if building cannot be undertaken without such demolition;

(2) The cost (considering such factors as betterment, cost of contracting and useful life) of removal, relocation or replacement of utilities, provided the grantee is legally obligated to pay under state or local law; and

(3) The cost of restoring streets and rights-of-way to their original condition. The need for such restoration must result directly from the construction and is generally limited to repaving the width of trench.

e. The cost of acquiring all or part of an existing publicly or privately owned wastewater treatment works provided all the following criteria are met:

(1) The acquisition, in and of itself, considered apart from any upgrade, expansion or rehabilitation, provides new pollution control benefits;

(2) The acquired treatment works was not built with previous Federal or State financial assistance;

(3) The primary purpose of the acquisition is *not* the reduction, elimination, or redistribution of public or private debt; and

(4) The acquisition does not circumvent the requirements of the Act, these regulations, or other Federal, State or local requirements.

2. Unallowable costs for land and rights-of-way include:

a. The costs of acquisition (including associated legal, administrative and engineering etc.) of sewer rights-of-way, waste treatment plant sites (including small system sites), sanitary landfill sites and sludge disposal areas except as provided in paragraphs 1. a. and b. of this section.

b. Any amount paid by the grantee for eligible land in excess of just compensation, based on the appraised value, the grantee's record of negotiation or any condemnation proceeding, as determined by the Regional Administrator.

c. Removal, relocation or replacement of utilities located on land by privilege, such as franchise.

E. Equipment, Materials and Supplies

1. Allowable costs of equipment, materials and supplies include:

a. The cost of a reasonable inventory of laboratory chemicals and supplies necessary to initiate plant operations and laboratory items necessary to conduct tests required for plant operation.

b. The costs for purchase and/or transportation of biological seeding materials required for expeditiously initiating the treatment process operation.

c. Cost of shop equipment installed at the treatment works necessary to the operation of the works.

d. The costs of necessary safety equipment, provided the equipment meets applicable Federal, State, local or industry safety requirements.

e. A portion of the costs of collection system maintenance equipment. The portion of allowable costs shall be the total equipment cost less the cost attributable to the equipment's anticipated use on existing collection sewers not funded on the grant. This calculation shall be based on: (1) The portion of the total collection system paid for by the grant, (2) a demonstrable frequency of need, and (3) the need for the equipment to preclude the discharge or bypassing of untreated wastewater.

f. The cost of mobile equipment necessary for the operation of the overall wastewater treatment facility, transmission of wastewater or sludge, or for the maintenance of equipment. These items include:

(1) Portable stand-by generators;

(2) Large portable emergency pumps to provide ''pump-around'' capability in the event of pump station failure or pipeline breaks; and

(3) Sludge or septage tankers, trailers, and other vehicles having as their sole purpose the transportation of liquid or dewatered wastes from the collector point (including individual or on-site systems) to the treatment facility or disposal site.

g. Replacement parts identified and approved in advance by the Regional Administrator as necessary to assure uninterrupted operation of the facility, provided they are critical parts or major systems components which are:

(1) Not immediately available and/or whose procurement involves an extended ''lead-time;''

(2) Identified as critical by the equipment supplier(s); or

(3) Critical but not included in the inventory provided by the equipment supplier(s).

2. Unallowable costs of equipment, materials and supplies include:

a. The costs of equipment or material procured in violation of the procurement requirements of 40 CFR part 33.

b. The cost of furnishings including draperies, furniture and office equipment.

c. The cost of ordinary site and building maintenance equipment such as lawnmowers and snowblowers.

d. The cost of vehicles for the transportation of the grantees' employees.

e. Items of routine ''programmed'' maintenance such as ordinary piping, air filters, couplings, hose, bolts, etc.

F. Industrial and Federal Users

1. Except as provided in paragraph F.2.a., allowable costs for treatment works serving industrial and Federal facilities include development of a municipal pretreatment program approvable under part 403 of this chapter, and purchase of monitoring equipment and construction of facilities to be used by

the municipal treatment works in the pretreatment program.

2. Unallowable costs for treatment works serving industrial and Federal facilities include:

a. The cost of developing an approvable municipal pretreatment program when performed solely for the purpose of seeking an allowance for removal of pollutants under part 403 of this chapter.

b. The cost of monitoring equipment used by industry for sampling and analysis of industrial discharges to municipal treatment works.

c. All incremental costs for sludge management incurred as a result of the grantee providing removal credits to industrial users under 40 CFR 403.7 beyond those sludge management costs that would otherwise be incurred in the absence of such removal credits.

G. Infiltration/Inflow

1. Allowable costs include:

a. The cost of treatment works capacity adequate to transport and treat nonexcessive infiltration/inflow under §35.2120.

b. The costs of sewer system rehabilitation necessary to eliminate excessive infiltration/inflow as determined in a sewer system study under §35.2120.

2. Unallowable costs include:

a. When the Regional Administrator determines that the flow rate is not significantly more than 120 gallons per capita per day under §35.2120(c)(2)(ii), the incremental cost of treatment works capacity which is more than 120 gallons per capita per day.

H. Miscellaneous Costs

1. Allowable costs include:

a. The costs of salaries, benefits and expendable materials the grantee incurs for the project.

b. Unless otherwise specified in this regulation, the costs of meeting specific Federal statutory procedures.

c. Costs for necessary travel directly related to accomplishment of project objectives. Travel not directly related to a specific project, such as travel to professional meetings, symposia, technology transfer seminars, lectures, etc., may be recovered only under an indirect cost agreement.

d. The costs of additions to a treatment works that was assisted under the Federal Water Pollution Control Act of 1956 (Pub. L. 84–660), or its amendments, and that fails to meet its project performance standards provided:

(1) The project is identified on the State priority list as a project for additions to a treatment works that has received previous Federal funds;

(2) The grant application for the additions includes an analysis of why the treatment works cannot meet its project performance standards; and

(3) The additions could have been included in the original grant award and:

(a) Are the result of one of the following:

(i) A change in the project performance standards required by EPA or the State;

(ii) A written understanding between the Regional Administrator and grantee prior to or included in the original grant award;

(iii) A written direction by the Regional Administrator to delay building part of the treatment works; or

(iv) A major change in the treatment works' design criteria that the grantee cannot control; or

(b) Meet all the following conditions:

(i) If the original grant award was made after December 28, 1981, the treatment works has not completed its first full year of operation;

(ii) The additions are not caused by the grantee's mismanagement or the improper actions of others;

(iii) The costs of rework, delay, acceleration or disruption that are a result of building the additions are not included in the grant; and

(iv) The grant does not include an allowance for facilities planning or design of the additions.

(4) This provision applies to failures that occur either before or after the initiation of operation. This provision does not cover a treatment works that fails at the end of its design life.

e. Costs of royalties for the use of or rights in a patented process or product with the prior approval of the Regional Administrator.

f. Costs allocable to the water pollution control purpose of multiple purpose projects as determined by applying the Alternative Justifiable Expenditure (AJE) method described in the *CG* series. Multiple purpose projects that combine wastewater treatment with recreation do not need to use the AJE method, but can be funded at the level of the most cost-effective single-purpose alternative.

g. Costs of grantee employees attending training workshops/seminars that are necessary to provide instruction in administrative, fiscal or contracting procedures required to complete the construction of the treatment works, if approved in advance by the Regional Administrator.

2. Unallowable costs include:

a. Ordinary operating expenses of the grantee including salaries and expenses of elected and appointed officials and preparation of routine financial reports and studies.

b. Preparation of applications and permits required by Federal, State or local regulations or procedures.

c. Administrative, engineering and legal activities associated with the establishment

of special departments, agencies, commissions, regions, districts or other units of government.

d. Approval, preparation, issuance and sale of bonds or other forms of indebtedness required to finance the project and the interest on them.

e. The costs of replacing, through reconstruction or substitution, a treatment works that was assisted under the Federal Water Pollution Control Act of 1956 (Pub. L. 84–660), or its amendments, and that fails to meet its project performance standards. This provision applies to failures that occur either before or after the initiation of operation. This provision does not apply to an innovative and alternative treatment works eligible for funding under §35.2032(c) or a treatment works that fails at the end of its design life or to a failed rotating biological contactor eligible for funding under §35.2035.

f. Personal injury compensation or damages arising out of the project.

g. Fines and penalties due to violations of, or failure to comply with, Federal, State or local laws, regulations or procedures.

h. Costs outside the scope of the approved project.

i. Costs for which grant payment has been or will be received from another Federal agency.

j. Costs of treatment works for control of pollutant discharges from a separate storm sewer system.

k. The cost of treatment works that would provide capacity for new habitation or other establishments to be located on environmentally sensitive land such as wetlands or floodplains.

l. The costs of preparing a corrective action report required by §35.2218(c).

I. Design/Build Project Grants

1. Allowable costs include:

a. The costs of supplementing the facilities plan to prepare the pre-bid package including the cost of preliminary boring and site plans, concept and layout drawings, schematic, general material and major equipment lists and specifications, instructions to builders, general and special conditions, project performance standards and permit limits, applicable State or other design standards, any requirements to go into bid analyses, and other contract documents, schedules, forms and certificates.

b. The costs for building the project, including:

(1) Project costs based on the lowest responsive, responsible competitive design/build project bid.

(2) Construction management services including detailed plans and specifications review and approval, change order review and approval, resident inspection, shop drawing approval and preparation of an O & M manual and of user charge and sewer use ordinance systems.

(3) Any adjustments to reflect the actual reasonable and necessary costs for preparing the pre-bid package.

(4) Post-construction activities required by project performance certification requirements.

(5) Contract and project administration activities including the review of contractor vouchers and payment requests, preparation of monitoring reports, grant administration and accounting services, routine legal costs, cost of eligible real property.

(6) Contingencies.

2. Unallowable costs include:

a. All costs in excess of the maximum agreed Federal share.

b. Costs of facilities planning where the grantee has received a Step 1 grant.

[49 FR 6234, Feb. 17, 1984, as amended at 50 FR 45896, Nov. 4, 1985; 55 FR 27098, June 29, 1990]

APPENDIX B—ALLOWANCE FOR FACILITIES PLANNING AND DESIGN

1. This appendix provides the method EPA will use to determine both the estimated and the final allowance under §35.2025 for facilities planning and design. The Step 2+3, Step 3 and Step 7 grant agreements will include an estimate of the allowance.

2. The Federal share of the allowance is determined by applying the applicable grant percentage in §35.2152 to the allowance.

3. The allowance is not intended to reimburse the grantee for costs actually incurred for facilities planning or design. Rather, the allowance is intended to assist in defraying those costs. Under this procedure, questions of equity (i.e., reimbursement on a dollar-for-dollar basis) will not be appropriate.

4. The estimated and final allowance will be determined in accordance with this appendix and Tables 1, 2 and 3. Table 2 is to be used in the event the grantee received a grant for facilities planning. Table 3 is to be used to determine the facilities planning allowance for a Step 7 grant if the grantee did not receive a Step 1 grant. The amount of the allowance is computed by applying the resulting allowance percentage to the initial allowable building cost.

5. The initial allowable building cost is the initial allowable cost of erecting, altering, remodeling, improving, or extending a treatment works, whether accomplished through subagreement or force account. Specifically, the initial allowable building cost is the allowable cost of the following:

a. The initial award amount of all prime subagreements for building the project.

b. The initial amounts approved for force account work performed in lieu of awarding a subagreement for building the project.

c. The purchase price of eligible real property.

6. The estimated allowance is to be based on the estimate of the initial allowable building cost.

7. The final allowance will be determined one time only for each project, based on the initial allowable building cost, and will not be adjusted for subsequent cost increases or decreases.

8. For a Step 3 or Step 7 project, the grantee may request payment of 50 percent of the Federal share of the estimated allowance immediately after grant award. Final payment of the Federal share of the allowance may be requested in the first payment after the grantee has awarded all prime subagreements for building the project, received the Regional Administrator's approval for force account work, and completed the acquisition of all eligible real property.

9. For a Step 2+3 project, if the grantee has not received a grant for facilities planning, the grantee may request payment of 30 percent of the Federal share of the estimated allowance immediately after the grant award. Half of the remaining estimated allowance may be requested when design of the project is 50 percent complete. If the grantee has received a grant for facilities planning, the grantee may request half of the Federal share of the estimated allowance when design of the project is 50 percent complete. Final payment of the Federal share of the allowance may be requested in the first payment after the grantee has awarded all prime subagreements for building the project, received the Regional Administrator's approval for force account work, and completed the acquisition of all eligible real property.

10. The allowance does not include architect or engineering services provided during the building of the project, e.g., reviewing bids, checking shop drawings, reviewing change orders, making periodic visits to job sites, etc. Architect or engineering services during the building of the project are allowable costs subject to this regulation and 40 CFR part 33.

11. The State will determine the amount and conditions of any advance under §35.2025(b), not to exceed the Federal share of the estimated allowance.

12. EPA will reduce the Federal share of the allowance by the amount of any advances the grantee received under §35.2025(b).

TABLE 1—ALLOWANCE FOR FACILITIES PLANNING AND DESIGN

Building cost	Allowance as a percentage of building cost*
$100,000 or less	14.4945
120,000	14.1146
150,000	13.6631
175,000	13.3597

TABLE 1—ALLOWANCE FOR FACILITIES PLANNING AND DESIGN—Continued

Building cost	Allowance as a percentage of building cost*
200,000	13.1023
250,000	12.6832
300,000	12.3507
350,000	12.0764
400,000	11.8438
500,000	11.4649
600,000	11.1644
700,000	10.9165
800,000	10.7062
900,000	10.5240
1,000,000	10.3637
1,200,000	10.0920
1,500,000	9.7692
1,750,000	9.5523
2,000,000	9.3682
2,500,000	9.0686
3,000,000	8.8309
3,500,000	8.6348
4,000,000	8.4684
5,000,000	8.1975
6,000,000	7.9827
7,000,000	7.8054
8,000,000	7.6550
9,000,000	7.5248
10,000,000	7.4101
12,000,000	7.2159
15,000,000	6.9851
17,500,000	6.8300
20,000,000	6.6984
25,000,000	6.4841
30,000,000	6.3142
35,000,000	6.1739
40,000,000	6.0550
50,000,000	5.8613
60,000,000	5.7077
70,000,000	5.5809
80,000,000	5.4734
90,000,000	5.3803
100,000,000	5.2983
120,000,000	5.1594
150,000,000	4.9944
175,000,000	4.8835
200,000,000	4.7894

NOTE: The allowance does not reimburse for costs incurred. Accordingly, the allowance Tables shall not be used to determine the compensation for facilities planning or design services. The compensation for facilities planning or design services should be based upon the nature, scope and complexity of the services required by the community.

*Interpolate between values.

TABLE 2—ALLOWANCE FOR DESIGN ONLY

Building cost	Allowance as a percentage of building cost*
$100,000 or less	8.5683
120,000	8.3808
150,000	8.1570
175,000	8.0059
200,000	7.8772
250,000	7.6668
300,000	7.4991
350,000	7.3602
400,000	7.2419
500,000	7.0485
600,000	6.8943
700,000	6.7666

TABLE 2—ALLOWANCE FOR DESIGN ONLY—Continued

Building cost	Allowance as a percentage of building cost*
800,000	6.6578
900,000	6.5634
1,000,000	6.4300
1,200,000	6.3383
1,500,000	6.1690
1,750,000	6.0547
2,000,000	5.9574
2,500,000	5.7983
3,000,000	5.6714
3,500,000	5.5664
4,000,000	5.4769
5,000,000	5.3306
6,000,000	5.2140
7,000,000	5.1174
8,000,000	5.0352
9,000,000	4.9637
10,000,000	4.9007
12,000,000	4.7935
15,000,000	4.6655
17,500,000	4.5790
20,000,000	4.5054
25,000,000	4.3851
30,000,000	4.2892
35,000,000	4.2097
40,000,000	4.1421
50,000,000	4.0314
60,000,000	3.9432
70,000,000	3.8702
80,000,000	3.8080
90,000,000	3.7540
100,000,000	3.7063
120,000,000	3.6252
150,000,000	3.5284
175,000,000	3.4630
200,000,000	3.4074

NOTE: The allowance does not reimburse for costs incurred. Accordingly, the allowance Tables shall not be used to determine the compensation for facilities planning or design services. The compensation for facilities planning or design services should be based upon the nature, scope and complexity of the services required by the community.

*Interpolate between values.

TABLE 3.—ALLOWANCE FOR FACILITIES PLANNING FOR DESIGN/BUILD PROJECTS

Building cost (dollars)	Allowance as a percentage of building cost*
100,000 or less	5.9262
120,000	5.7337
150,000	5.5061
175,000	5.3538
200,000	5.2250
250,000	5.0163
300,000	4.8516
350,000	4.7162
400,000	4.6019
500,000	4.4164
600,000	4.2701
700,000	4.1499
800,000	4.0483
900,000	3.9606
1,000,000	3.8837
1,200,000	3.7538
1,500,000	3.6003
1,750,000	3.4976
2,000,000	3.4109

TABLE 3.—ALLOWANCE FOR FACILITIES PLANNING FOR DESIGN/BUILD PROJECTS—Continued

Building cost (dollars)	Allowance as a percentage of building cost*
2,500,000	3.2703
3,000,000	3.1595
3,500,000	3.0684
4,000,000	2.9915
5,000,000	2.8669
6,000,000	2.7686
7,000,000	2.6880
8,000,000	2.6198

NOTE: Building cost is the sum of the allowable cost of (1) the initial award amount of the prime subagreement for building and designing the project; and (2) the purchase price of eligible real property.

*Interpolate between values.

[49 FR 6234, Feb. 17, 1984, as amended at 55 FR 27098, June 29, 1990]

Subpart J—Construction Grants Program Delegation to States

AUTHORITY: Sections 205(g) and 518(e) of the Clean Water Act, as amended, 33 U.S.C. 1251 *et. seq.*

SOURCE: 48 FR 37818, Aug. 19, 1983, unless otherwise noted.

§ 35.3000 Purpose.

(a) This regulation establishes policies and procedures for the development, management, and EPA overview of State administration of the wastewater treatment works construction grants program under section 205(g) of the Clean Water Act, as amended. The delegation agreement between EPA and the State is a precondition for construction management assistance under section 205(g). Program requirements for other assistance agreements authorized by section 205(g) for activities under sections 402 and 404 and section 208(b)(4) are provided in part 130. Administration of all section 205(g) assistance agreements follows the procedures established in subpart A of this part.

(b) A State, for purposes of receiving delegation of construction grant program responsibilities under this subpart, shall include a State, the District of Columbia, the Commonwealth of Puerto Rico, the Virgin Islands, Guam, American Samoa, the Trust Territories of the Pacific Islands (Palau), the Commonwealth of the Northern Marianas, and any Indian Tribe, band, group, or

community recognized by the Secretary of the Interior and exercising governmental authority over a Federal Indian reservation, provided that the Tribe satisfies the following criteria:

(1) The Indian Tribe has a governing body carrying out substantial governmental duties and powers. The Tribe must submit a narrative statement to the Regional Administrator describing the form of the Tribal government, describing the types of essential governmental functions currently performed and identifying the source of the authority to perform these functions.

(2) The functions to be exercised by the Indian Tribe pertain to the management and protection of water resources which are held by an Indian Tribe, held by the United States in trust for Indians, held by a member of an Indian Tribe if such property is subject to a trust restriction on alienation, or otherwise within the borders of an Indian reservation. Assertions by the Indian Tribe with respect to this criterion will be provided by EPA to adjacent governmental entities in accordance with 40 CFR 130.15.

(3) The Indian Tribe is reasonably expected to be capable, in the Regional Administrator's judgment, of carrying out the functions to be exercised in a manner consistent with the terms and purposes of the Clean Water Act and applicable regulations.

(c) Where a Tribe has previously qualified for treatment as a State under a Clean Water Act or Safe Drinking Water Act program, the Tribe need only provide the required information which had not been submitted in a previous treatment as a State application.

[48 FR 37818, Aug. 19, 1983, as amended at 55 FR 27098, June 29, 1990]

§ 35.3005 Policy.

(a) EPA's policy is to delegate management of the wastewater treatment works construction grant program to the maximum extent possible consistent with the objectives of the Act, prudent fiscal management, and EPA's overall national responsibility for the program. The policy is premised on an on-going partnership between EPA and the States that includes consultation with the States in formulation of policy and guidance by EPA. EPA expects States to undertake full delegation of all project level activities, including preliminary determinations of non-delegable requirements. The objective of delegation is to eliminate duplication of Federal and State effort in the management of the construction grant program, to increase State participation in the construction grant program, and to improve operating efficiency.

(b) Program delegation is to be accomplished through a formal delegation agreement between the Regional Administrator and the State. The delegation agreement will specify the functions which the State will perform and procedures for State certification to EPA.

(c) EPA will overview the performance of the program under delegation to ensure that progress is being made toward meeting the construction grant program objectives and that the State is continuing to employ administrative, fiscal, and program controls to guard against fraud, misuse, and mismanagement of public funds. Overview will also include review of the State management process to ensure it is efficient, effective and assures timely State reviews.

§ 35.3010 Delegation agreement.

(a) Before execution of the delegation agreement, the Regional Administrator must determine that the unit of the State agency designated to implement the agreement is capable of carrying out the delegated functions. The Regional Administrator will evaluate those aspects of the unit which directly affect the State's capability to implement the agreement.

(b) In the delegation agreement, the State agency will assure the Regional Administrator that it will execute its responsibilities under the delegation agreement in conformance with all applicable Federal laws, regulations, orders, and policies.

(c) The delegation agreement will:

(1) Designate the organizational unit within the State responsible for the implementation of the delegation agreement;

(2) List the functions delegated and functions to be delegated, with a schedule for their assumption by the State;

(3) Identify procedures to be followed and records to be kept by the State and EPA in carrying out each delegated function;

(4) Identify the staffing, hiring, training, and funding necessary to carry out the delegated functions;

(5) Estimate program costs by year for the term of the delegation agreement;

(6) Identify an accounting system, acceptable to the Regional Administrator, which will properly identify and relate State costs to the conduct of delegated functions; and

(7) Identify the form and content of the system for EPA overview of State performance consistent with the requirements in § 35.3025 of this subpart, including the frequency, method, and extent of monitoring, evaluation, and reporting.

(d) The term of the delegation agreement shall generally be five years. As subsequent construction management assistance is awarded, the delegation agreement may be amended to maintain a five-year period.

(e) The delegation agreement will be revised, as necessary, to reflect substantial program or procedural changes, as determined by the Regional Administrator.

(Approved by the Office of Management and Budget under control number 2000–0417)

§ 35.3015 Extent of State responsibilities.

(a) Except as provided in paragraph (c) of this section, the Regional Administrator may delegate to the State agency authority to review and certify all construction grant documents required before and after grant award and to perform all construction grant review and management activities necessary to administer the construction grants program.

(b) The State may also act as the manager of waste treatment construction grant projects for small communities. The State, with the approval of the community, may serve as the community contracting agent and undertake responsibilities such as negotiating subagreements, providing technical assistance, and assisting the community in exercising its resident engineering responsibility. In this capacity, the State is in the same position as a private entity and cannot require a small community to hold the State harmless from negligent acts or omissions. The State may also execute an agreement with any organization within the State government, other than the State agency, which is capable of performing these services. The terms of the agreement to provide these services to small communities must be approved by the Regional Administrator before execution of the agreement.

(c) The Regional Administrator shall retain overall responsibility for the construction grant program and exercise direct authority for the following:

(1) Construction grant assistance awards, grant amendments, payments, and terminations;

(2) Projects where an overriding Federal interest requires greater Federal involvement;

(3) Final determinations under Federal statutes and Executive Orders (e.g., the National Environmental Policy Act of 1969, 42 U.S.C. 4321 *et seq.*, Title VI of the Civil Rights Act of 1964, 42 U.S.C. 2000d *et seq.*), except for sections 201, 203, 204, and 212 of the Clean Water Act;

(4) Final resolution of construction grant audit exceptions; and

(5) Procurement determinations listed under 40 CFR 33.001(g).

§ 35.3020 Certification procedures.

(a) The State will furnish a written certification to the Regional Administrator for each construction grant project application submitted to EPA for award. The certification must state that all Federal requirements, within the scope of authority delegated to the State under the delegation agreement, have been met. This certification must be supported by documentation specified in the delegation agreement. The documentation must be made available to the Regional Administrator upon request.

(b) Certification that a construction grant project application complies with all delegable pre-award requirements consists of certification of compliance with the following sections of subpart I of this part: § 35.2030 (Facilities planning); § 35.2040 (a) and (b) (Grant application); § 35.2042 (Review of

grant applications); and §§ 35.2100 (Limitations on award) through and including 35.2125, except for § 35.2101 (Advanced treatment reviews for projects with incremental capital advanced treatment costs of over $3 million), § 35.2112 (Marine waiver discharge applicants), and § 35.2113 (final decisions under the National Environmental Policy Act).

§ 35.3025 Overview of State performance under delegation.

The Regional Administrator will review the performance of a delegated State through an annual overview program, developed in accordance with procedures agreed to in the delegation agreement (§ 35.3010(c)(7)). The purpose of the overview program is to ensure that both the delegated State and EPA efficiently and effectively execute the fiscal and program responsiblilities under the Clean Water Act and related legislation. The overview program is comprised of three steps:

(a) *Developing a plan for overview*. The plan for overview specifies priority objectives, key measures of performance, and monitoring and evaluation activities (including State reporting to EPA) for the upcoming year. EPA and the State should agree to a plan for overview in advance of the upcoming year.

(1) Priority objectives will include both program and management objectives. In developing the State priority objectives, the national priorities identified by the Administrator on an annual basis must, at a minimum, be addressed and applied as appropriate to each State. In addition, the Regional Administrator and the State may identify other objectives unique to the situation in the State.

(2) For each priority objective, the plan for overview will specify key measures of performance (both quantitative and qualitative), identify which measures will require the negotiation of outputs, and enumerate the specific monitoring and evaluation activities and methods planned for the upcoming year.

(b) *Negotiating annual outputs.* Annually, the Region and delegated State will negotiate and agree upon outputs, where required by the plan for overview, to cover priority objectives for the upcoming year. This negotiation should also result in development of the work program required for the section 205(g) assistance application, pursuant to subpart A, § 35.130 of this part. Where the assistance application covers a budget period beyond the annual overview program period, the assistance award may be made for the full budget period, contingent on future negotiation of annual outputs under this paragraph for subsequent years of the budget period.

(c) *Monitoring and evaluating program performance.* Monitoring and evaluation of program performance (including State reporting) is based on the plan for overview agreed to in advance, and should be appropriate to the delegation situation existing between the Region and State. It should take into account past performance of the State and the extent of State experience in administering the delegated functions. An on-site evaluation will occur at least annually and will cover, at a minimum, negotiated annual outputs, performance expected in the delegation agreement and, where applicable, evaluation of performance under the assistance agreement as provided in 40 CFR 35.150. The evaluation will cover performance of both the Region and the State. Upon completion of the evaluation, the delegation agreement may be revised, if necessary, to reflect changes resulting from the evaluation. The Regional Administrator may terminate or annul any section 205(g) financial assistance for cause in accordance with the procedures in subpart A, § 35.150, and part 30.

(Approved by the Office of Management and Budget under control number 2000–0417)

§ 35.3030 Right of review of State decision.

(a) Any construction grant application or grantee who has been adversely affected by a State's action or omission may request Regional review of such action or omission, but must first submit a petition for review to the State agency that made the initial decision. The State agency will make a final decision in accordance with procedures set forth in the delegation agreement. The State must provide, in writing, normally within 45 days of the date it receives the petition, the basis for its

decision regarding the disputed action or omission. The final State decision must be labeled as such and, if adverse to the applicant or grantee, must include notice of the right to request Regional review of the State decision under this section. A State's failure to address the disputed action or omission in a timely fashion, or in writing, will not preclude Regional review.

(b) Requests for Regional review must include:

(1) A copy of any written State decision.

(2) A statement of the amount in dispute,

(3) A description of the issues involved, and

(4) A concise statement of the objections to the State decision.

The request must be filed by registered mail, return receipt requested, within thirty days of the date of the State decision or within a reasonable time if the State fails to respond in writing to the request for review.

(c) The Region shall determine whether the State's review is comparable to a dispute decision official's (DDO) review pursuant to 40 CFR part 30, subpart L. If the State's review is comparable, Regional review of the State's decision will be conducted by the Regional Administrator. If the State's review is not comparable, the DDO will review the State's decision and issue a written decision. Review of either a Regional Administrator or DDO decision may be requested pursuant to subpart L.

(Approved by the Office of Management and Budget under control number 2040–0095)

[50 FR 45896, Nov. 4, 1985]

§ 35.3035 Public participation.

(a) Public participation during the development, review, approval, and substantial revision of the delegation agreement will be in accordance with the requirements of section 101(e) of the Act, part 25 of this chapter, and this subpart.

(b) The Regional Administrator or the State, as mutually agreed, will make the draft delegation agreement, any proposed substantial amendment to the delegation agreement, and the proposed annual overview program, available to the public for comment, and provide notice of availability, sufficiently in advance of execution to allow for timely comment.

(c) If, based on comments received, the Regional Administrator or State determines that significant interest exists, the State and EPA will consult with interested and affected groups and citizens prior to execution of the delegation agreement, substantial amendment, or annual overview program. If the Regional Administrator or State determines that significant interest and desire for a public meeting exist, the Region or State will hold one or more public meetings at least 30 days prior to execution.

Subpart K—State Water Pollution Control Revolving Funds

AUTHORITY: Sections 205(m), 501(a) and title VI of the Clean Water Act, as amended, 33 U.S.C. 1285(m), 33 U.S.C. 1361(a), 33 U.S.C. 1381–1387.

SOURCE: 55 FR 10178, Mar. 19, 1990, unless otherwise noted.

§ 35.3100 Policy and purpose.

(a) The Agency intends to implement the State water pollution control revolving fund program in a manner that preserves for States a high degree of flexibility for operating their revolving funds in accordance with each State's unique needs and circumstances. The purpose of these regulations is to advance the general intent of title VI of the Clean Water Act, which is to ensure that each State's program is designed and operated to continue providing assistance for water pollution control activities in perpetuity.

(b) These regulations reflect statutory and program requirements that have been previously published in the Initial Guidance for State Revolving Funds, which was signed by the Assistant Administrator for Water on January 28, 1988, and the supplementary memorandum to the Initial Guidance for State Revolving Funds, which was signed by the Assistant Administrator for Water on September 30, 1988. Copies of both documents can be obtained by writing the Office of Municipal Pollution Control (WH–546), Environmental Protection Agency, 401 M Street SW., Washington, DC 20460.

(c) These regulations supplement title VI by codifying all major program requirements, applicable to the SRF program. EPA will not impose additional major program requirements without an opportunity for affected parties to comment. The process for amending this regulation to incorporate these requirements will begin within three months of their issuance.

§ 35.3105 Definitions.

Words and terms that are not defined below and that are used in this rule shall have the same meaning they are given in 40 CFR part 31 and 40 CFR part 35, subpart I.

(a) *Act.* The Federal Water Pollution Control Act, more commonly known as the Clean Water Act (Pub. L. 92–500), as amended by the Water Quality Act of 1987 (Pub. L. 100–4). 33 U.S.C. 1251 *et seq.*

(b) *Binding Commitment.* A legal obligation by the State to a local recipient that defines the terms for assistance under the SRF.

(c) *Capitalization Grant.* The assistance agreement by which the EPA obligates and awards funds allotted to a State for purposes of capitalizing that State's revolving fund.

(d) *Cash draw.* The transfer of cash under a letter of credit (LOC) from the Federal Treasury into the State's SRF.

(e) *Disbursement.* The transfer of cash from an SRF to an assistance recipient.

(f) *Equivalency projects.* Those section 212 wastewater treatment projects constructed in whole or in part before October 1, 1994, with funds ''directly made available by'' the capitalization grant. These projects must comply with the requirements of section 602(b)(6) of the Act.

(g) *Funds ''directly made available by'' capitalization grants.* Funds equaling the amount of the grant.

(h) *Payment.* An action by the EPA to increase the amount of capitalization grant funds available for cash draw from an LOC.

(i) *SRF.* State water pollution control revolving fund.

§ 35.3110 Fund establishment.

(a) *Generally.* Before the Regional Administrator (RA) may award a capitalization grant, the State must establish an SRF that complies with section 603 of the Act and this rule.

(b) *SRF accounts.* The SRF can be established within a multiple-purpose State financing program. However, the SRF must be a separate account or series of accounts that is dedicated solely to providing loans and other forms of financial assistance, but not grants.

(c) *SRF administration.* The SRF must be administered by an instrumentality of the State that is empowered to manage the Fund in accordance with the requirements of the Act. Where more than one agency of the State is involved in administering the activities of the State's program, the functions and the relationships of those agencies must be established to the satisfaction of the RA.

(d) *Documentation of the establishment of an SRF program.* (1) As part of its initial application for the capitalization grant, the State must furnish the RA with documentation of the establishment of an SRF and designation of the State instrumentality that will administer the SRF in accordance with the Act.

(2) With each capitalization grant application, the State's Attorney General (AG), or someone designated by the AG, must sign or concur in a certification that the State legislation establishing the SRF and the powers it confers are consistent with State law, and that the State may legally bind itself to the terms of the capitalization grant agreement.

(3) Where waiting for the AG's signature or concurrence would by itself significantly delay awarding the first grant (i.e., there are no other issues holding up the award), the head or chief legal officer of the State agency which has direct responsibility for administering the SRF program may sign the certification at the time of the capitalization grant award, provided the capitalization grant agreement contains a special condition requiring the State to submit the AG/designee's concurrence to EPA within a reasonable time, not to exceed 120 days, after the grant is awarded.

(e) *Allotment.* (1) Appropriations for fiscal years 1987 through 1990 under both title II and title VI programs will

be allotted in accordance with the formula contained in section 205(c)(3) of the Act.

(2) Title VI funds are available for the Agency to obligate to the State during the fiscal year in which they are allotted and during the following fiscal year. The amount of any title VI allotment not obligated to the State at the end of this period of availability will be reallotted for title VI purposes in accordance with 40 CFR 35.2010.

(3) A State that does not receive grants that obligate all the funds allotted to it under title VI in the first year of its availability will not receive reallotted funds from that appropriation.

(4) Notwithstanding 40 CFR 35.910 and 40 CFR 35.2010(a), deobligations and reallotments of title II funds may be transferred to a title VI capitalization grant regardless of either the year in which the title II funds were originally allotted or the year in which they are deobligated or reallotted.

(f) *Transfer of title II allotments.* A State may exercise the option to transfer a portion of its title II allotment for deposit, through a capitalization grant, into an established water pollution control revolving fund, under section 205(m) of the Act.

(1) If the State elects this option, the Governor of the State must submit a Notice of Intent to the RA specifying the amount of the title II allotment the State intends to use for title VI purposes during the fiscal year for which it is submitted. The Notice may also identify anticipated, unobligated title II funds from the prior fiscal year, and request transfer of those funds as well.

(2) Each Notice of Intent must be submitted on or before July 3 of the year preceding the Federal fiscal year in which those funds are available. If a State fails to file a Notice of Intent on or before the prescribed date, then the State may not transfer title II allotments into an SRF in the upcoming fiscal year. A timely Notice of Intent may be later withdrawn or amended.

(3) When the capitalization grant is awarded, funds requested under section 205(m) of the Act will be obligated under title VI for the activities of the SRF. If a Notice of Intent anticipates transfer of funds under the authority of section 205(m), but those funds are not so obligated by the end of the two year period of availability, they will be subject to reallotment as construction grant funds.

(g) *Reserves and transferred allotments.* (1) Funds reserved under section 205(g) of the Act can be used to develop SRF programs. However, before any of these funds may be used for purposes of the SRF, the State must establish to the satisfaction of the RA that adequate funds, up to the section 205(g) maximum, will be available from any source to administer the construction grants program.

(2) Funds reserved under sections 205(j)(1) and 205(j)(5) of the Act must be calculated based on the State's full title II allotment, and cannot be transferred to the SRF.

(3) Funds reserved under sections 201(l)(2), 205(h), and 205(i) of the Act must also be calculated based upon the State's full title II allotment. However, these reserves may be transferred into an SRF.

(4) The State must reserve from each fiscal year's title VI allotment the greater of one percent of its allotment or $100,000 to carry out planning under sections 205(j) and 303(e) of the Act.

(Approved by the Office of Management and Budget under control number 2040–0118)

§ 35.3115 Eligible activities of the SRF.

Funds in the SRF shall not be used to provide grants. SRF balances must be available in perpetuity and must be used solely to provide loans and other authorized forms of financial assistance:

(a) To municipalities, inter- municipal, interstate, or State agencies for the construction of publicly owned wastewater treatment works as these are defined in section 212 of the Act and that appear on the State's priority list developed pursuant to section 216 of the Act; and

(b) For implementation of a nonpoint source pollution control management program under section 319 of the Act; and

(c) For development and implementation of an estuary conservation and management plan under section 320 of the Act.

§ 35.3120 Authorized types of assistance.

The SRF may provide seven general types of financial assistance.

(a) *Loans.* The SRF may award loans at or below market interest rates, or for zero interest.

(1) Loans may be awarded only if:

(i) All principal and interest payments on loans are credited directly to the SRF;

(ii) The annual repayment of principal and payment of interest begins not later than one year after project completion;

(iii) The loan is fully amortized not later than twenty years after project completion; and

(iv) Each loan recipient establishes one or more dedicated sources of revenue for repayment of the loan.

(2) Where construction of a treatment works has been phased or segmented, loan repayment requirements apply to the completion of individual phases or segments.

(b) *Refinancing existing debt obligations.* The SRF may buy or refinance local debt obligations at or below market rates, where the initial debt was incurred after March 7, 1985, and building began after that date.

(1) Projects otherwise eligible for refinancing under this section on which building began:

(i) Before January 28, 1988 (the effective date of the Initial Guidance for State Revolving Funds) must meet the requirements of title VI to be fully eligible.

(ii) After January 28, 1988, but before the effective date of this rule, must meet the requirements of title VI and of the Initial Guidance for State Revolving Funds to be fully eligible.

(iii) After March 19, 1990 must meet the requirements of this rule to be fully eligible.

(2) Where the original debt for a project was in the form of a multi-purpose bond incurred for purposes in addition to wastewater treatment facility construction, an SRF may provide refinancing only for eligible purposes, and not for the entire debt.

(c) *Guarantee or purchase insurance for local debt obligations.* The SRF may guarantee local debt obligations where such action would improve credit market access or reduce interest rates. The SRF may also purchase or provide bond insurance to guarantee debt service payment.

(d) *Guarantee SRF debt obligations.* The SRF may be used as security or as a source of revenue for the payment of principal and interest on revenue or general obligation bonds issued by the State provided that the net proceeds of the sale of such bonds are deposited in the SRF.

(e) *Loan guarantees for ''sub-State revolving funds.''* The SRF may provide loan guarantees for similar revolving funds established by municipal or intermunicipal agencies, to finance activities eligible under title VI.

(f) *Earn interest on fund accounts.* The SRF may earn interest on Fund accounts.

(g) *SRF administrative expenses.* (1) Money in the SRF may be used for the reasonable costs of administering the SRF, provided that the amount does not exceed 4 percent of all grant awards received by the SRF. Expenses of the SRF in excess of the amount permitted under this section must be paid for from sources outside the SRF.

(2) Allowable administrative costs include all reasonable costs incurred for management of the SRF program and for management of projects receiving financial assistance from the SRF. Reasonable costs unique to the SRF, such as costs of servicing loans and issuing debt, SRF program start-up costs, financial management, and legal consulting fees, and reimbursement costs for support services from other State agencies are also allowable.

(3) Unallowable administrative costs include the costs of administering the construction grant program under section 205(g), permit programs under sections 402 and 404 and Statewide wastewater management planning programs under section 208(b)(4).

(4) Expenses incurred issuing bonds guaranteed by the SRF, including the costs of insuring the issue, may be absorbed by the proceeds of the bonds, and need not be charged against the 4 percent administrative costs ceiling. The net proceeds of those issues must be deposited in the Fund.

§ 35.3125 Limitations on SRF assistance.

(a) *Prevention of double benefit.* If the SRF makes a loan in part to finance the cost of facility planning and preparation of plans, specifications, and estimates for the building of treatment works and the recipient subsequently receives a grant under section 201(g) for the building of treatment works and an allowance under section 201(1)(1), the SRF shall ensure that the recipient will promptly repay the loan to the extent of the allowance.

(b) *Assistance for the non-Federal share.* (1) The SRF shall not provide a loan for the non-Federal share of the cost of a treatment works project for which the recipient is receiving assistance from the EPA under any other authority.

(2) The SRF may provide authorized financial assistance other than a loan for the non-Federal share of a treatment works project receiving EPA assistance if the Governor or the Governor's designee determines that such assistance is necessary to allow the project to proceed.

(3) The SRF may provide loans for subsequent phases, segments, or stages of wastewater treatment works that previously received grant assistance for earlier phases, segments, or stages of the same treatment works.

(4) A community that receives a title II construction grant after the community has begun building with its own financing, may receive SRF assistance to refinance the pre-grant work, in accordance with the requirements for refinancing set forth under § 35.3120(b) of this part.

(c) *Publicly owned portions.* The SRF may provide assistance for only the publicly owned portion of the treatment works.

(d) *Private operation.* Contractual arrangements for the private operation of a publicly owned treatment works will not affect the eligibility of the treatment works for SRF financing.

(e) *Water quality management planning.* The SRF may provide assistance only to projects that are consistent with any plans developed under sections 205(j), 208, 303(e), 319 and 320 of the Act.

§ 35.3130 The capitalization grant agreement.

(a) *Contents.* The capitalization grant agreement must contain or incorporate by reference the State's application, Intended Use Plan, agreed upon payment schedule, State environmental review process and certifications or demonstrations of other agreement requirements and, where used, the SRF Operating Agreement.

(b) *Operating agreement.* At the option of the State, the organizational and administrative framework and those procedures of the SRF program that are not expected to change annually may be described in an Operating Agreement (OA). The OA must be incorporated by reference in the grant agreement.

(c) *Application requirements.* The State must certify in its application that it has the legal, managerial, technical, and operational capabilities to administer the program.

(Approved by the Office of Management and Budget under control number 2040–0118)

§ 35.3135 Specific capitalization grant agreement requirements.

(a) *Agreement to accept payments.* The State must agree to accept grant payments in accordance with the negotiated payment schedule.

(b) *Provide a State match.* The State must agree to deposit into its SRF an amount equaling at least 20 percent of the amount of each grant payment.

(1) The State match must be deposited on or before the date on which the State receives each payment from the grant award. The State may maintain its match in an LOC or other financial arrangement similar to the Federal LOC, provided that the State's proportional share is converted to cash when the Federal LOC is drawn upon.

(2) Bonds issued by the State for the match may be retired from the interest earned by the SRF (including interest on SRF loans) if the net proceeds from the State issued bonds are deposited in the fund. Loan principal must be repaid to the SRF and cannot be used to retire State issued bonds.

(3) The State must identify the source of the matching amount in the capitalization grant application and must establish to the RA's satisfaction

that the source is not Federal money, unless specifically authorized to be used for such purposes under the statute making the funds available.

(4) If the State provides a match in excess of the required amount, the excess balance may be banked toward subsequent match requirements.

(5) If the State has deposited State monies in a dedicated revolving fund after March 7, 1985 and prior to receiving a capitalization grant, the State may credit these monies toward the match requirement:

(i) If the monies were deposited in an SRF that subsequently received a capitalization grant and, if the deposit was expended, it was expended in accordance with title VI;

(ii) If the monies were deposited in a separate fund that has not received a capitalization grant, they were expended in accordance with title VI and an amount equal to all repayments of principal and payments of interest from these loans will be deposited in the Federally capitalized fund; or

(iii) If the monies were deposited in a separate fund and used as a reserve consistent with title VI, and an amount equal to the reserve is transferred to the Federally capitalized fund as its function is satisfied.

(c) *Binding commitments.* The State must make binding commitments in an amount equal to 120 percent of each quarterly grant payment within one year after the receipt of each quarterly grant payment.

(1) Binding commitments may be for any of the types of assistance provided for in sections 40 CFR 35.3120(a), (b), (c), (e) or (f) and for Fund administration under 40 CFR 35.3120(g).

(2) If the State commits more than the required 120 percent, EPA will recognize the cumulative value of the binding commitments, and the excess balance may be banked towards the binding commitment requirements of subsequent quarters.

(3) If the State does not make binding commitments equaling 120 percent of the quarterly grant payment within one year after it receives the payment, the RA may withhold future quarterly grant payments, and require adjustments to the payment schedule before releasing further payments.

(d) *Expeditious and timely expenditure.* The State must agree to expend all funds in the SRF in an expenditious and timely manner.

(e) *First use of funds.* (1) The State must agree to first use funds in the SRF equaling the amount of the grant, all repayments of principal and payments of interest on the initial loans from the grant, and the state match to address any major and minor publicly owned treatment works (POTW) that the Region and the State have previously identified as part of the National Municipal Policy list for the State.

(2) These funds may be used to fund the cost-effective reserve capacity of these projects.

(3) In order for a State to use these funds for other section 212 POTWs or for nonpoint source (section 319) or estuary (section 320) activities, the State must certify that the POTWs identified in § 35.3135(e)(1) are either:

(i) In compliance; or

(ii) On an enforceable schedule; or

(iii) Have an enforcement action filed; or

(iv) Have a funding commitment during or prior to the first year covered by the Intended Use Plan.

(4) Other funds in the SRF may be used at any time for the construction of any treatment works on the State's priority list or for activities under sections 319 and 320 of the Act.

(f) *Compliance with title II requirements.* (1) The State must agree that equivalency projects will comply with sections 201(b), 201(g)(1), 201(g)(2), 201(g)(3), 201(g)(5), 201(g)(6), 201(n)(1), 201(o), 204(a)(1), 204(a)(2), 204(b)(1), 204(d)(2), 211, 218, 511(c)(1), and 513 of the Act.

(2) The State must comply only with the statutory requirements. The State may develop its own procedures for implementing the statutory provisions. The RA will accept State procedures provided that the procedures will adequately assure compliance with the statutory requirements, considered in the context of the SRF program.

(3) Where the State funds equivalency projects for more than the capitalization grant amount, EPA will recognize the cumulative value of the eligible costs of the equivalency projects,

and the excess balance may be banked toward subsequent year equivalency requirements.

(4) Only those eligible costs actually funded with loans or other authorized assistance from the SRF may be credited toward satisfaction of the equivalency requirement, and only in the amount of that assistance.

(g) *State laws and procedures.* The State must agree to commit or expend each quarterly capitalization grant payment in accordance with the State's own laws and procedures regarding the commitment or expenditure of revenues.

(h) *State accounting and auditing procedures.* (1) The State must agree to establish fiscal controls and accounting procedures that are sufficient to assure proper accounting for payments received by the SRF, disbursements made by the SRF, and SRF balances at the beginning and end of the accounting period.

(2) The State must also agree to use accounting, audit, and fiscal procedures conforming to generally accepted government accounting standards as these are promulgated by the Governmental Accounting Standards Board. Generally accepted government auditing standards are usually defined as, but not limited to, those contained in the U.S. General Accounting Office (GAO) publication ''Government Auditing Standards'' (1988 revision).

(i) *Recipient accounting and auditing procedures.* The State must agree to require recipients of SRF assistance to maintain project accounts in accordance with generally accepted government accounting standards as these are promulgated by the Government Accounting Standards Board. These accounts must be maintained as separate accounts.

(j) *Annual report.* The State must agree to make an Annual Report to the RA on the actual use of the funds, in accordance with section 606(d) of the Act.

§ 35.3140 Environmental review requirements.

(a) *Generally.* The State must agree to conduct reviews of the potential environmental impacts of all section 212 construction projects receiving assistance from the SRF, including nonpoint source pollution control (section 319) and estuary protection (section 320) projects that are also section 212 projects.

(b) *NEPA-like State environmental review process.* Equivalency projects must undergo a State environmental review process (SERP) that conforms generally to the National Environmental Policy Act (NEPA). The State may elect to apply the procedures at 40 CFR part 6, subpart E and related subparts, or apply its own ''NEPA-like'' SERP for conducting environmental reviews, provided that the following elements are met.

(1) *Legal foundation.* The State must have the legal authority to conduct environmental reviews of section 212 construction projects receiving SRF assistance. Such authority and supporting documentation must specify:

(i) The mechanisms to implement mitigation measures to ensure that a project is environmentally sound;

(ii) The legal remedies available to the public to challenge environmental review determinations and enforcement actions;

(iii) The State agency primarily responsible for conducting environmental reviews;

(iv) The extent to which environmental review responsibilities will be delegated to local recipients and will be subject to oversight by the primary State agency.

(2) *Interdisciplinary approach.* The State must employ an interdisciplinary approach for identifying and mitigating adverse environmental effects including, but not limited to, those associated with other applicable Federal environmental authorities.

(3) *Decision documentation.* The State must fully document the information, processes and premises that influence decisions to:

(i) Proceed with a project contained in a finding of no significant impact (FNSI) following documentation in an environmental assessment (EA);

(ii) Proceed or not proceed with a project contained in a record of decision (ROD) following preparation of a full environmental impact statement (EIS);

(iii) Reaffirm or modify a decision contained in a previously issued categorical exclusion (CE), EA/FNSI or EIS/ROD following a mandatory 5 year environmental reevaluation of a proposed project; and

(iv) If a State elects to implement processes for either partitioning an environmental review or CE from environmental review, the State must similarly document these processes in its proposed SERP.

(4) *Public notice and participation.* (i) The State must provide public notice when a CE is issued or rescinded, a FNSI is issued but before it becomes effective, a decision issued 5 years earlier is reaffirmed or revised, and prior to initiating an EIS.

(ii) Except with respect to a public notice of a categorical exclusion or reaffirmation of a previous decision, a formal public comment period must be provided during which no action on a project will be allowed.

(iii) A public hearing or meeting must be held for all projects except for those having little or no environmental effect.

(5) *Alternatives Consideration.* The State must have evaluation criteria and processes which allow for:

(i) Comparative evaluation among alternatives including the beneficial and adverse consequences on the existing environment, the future environment and individual sensitive environmental issues that are identified by project management or through public participation; and

(ii) Devising appropriate near-term and long-range measures to avoid, minimize or mitigate adverse impacts.

(c) *Alternative State environmental review process.* The State may elect to apply an alternative SERP to non-equivalency section 212 construction projects assisted by the SRF, provided that such process:

(1) Is supported by a legal foundation which establishes the State's authority to review section 212 construction projects;

(2) Responds to other environmental objectives of the State;

(3) Provides for comparative evaluations among alternatives and account for beneficial and adverse consequences to the existing and future environment;

(4) Adequately documents the information, processes and premises that influence an environmental determination; and

(5) Provides for notice to the public of proposed projects and for the opportunity to comment on alternatives and to examine environmental review documents. For projects determined by the State to be controversial, a public hearing must be held.

(d) *EPA approval process.* The RA must review and approve any State ''NEPA-like'' and alternative procedures to ensure that the requirements for both have been met. The RA will conduct these reviews on the basis of the criteria for evaluating NEPA-like reviews contained in Appendix A to this part.

(e) *Modifications to approved SERPs.* Significant changes to State environmental review procedures must be approved by the RA.

§ 35.3145 Application of other Federal authorities.

(a) *Generally.* The State must agree to comply and to require all recipients of funds ''directly made available by'' capitalization grants to comply with applicable Federal authorities.

(b) *Informing EPA.* The State must inform EPA when consultation or coordination by EPA with other Federal agencies is necessary to resolve issues regarding compliance with those requirements.

(c) *Civil Rights laws.* All programs, projects and activities of the State capitalization grant recipient must be in compliance with the Civil Rights Act of 1964, as amended, 42 U.S.C. 2000d *et seq.*, section 504 of the Rehabilitation Act of 1973, as amended, 29 U.S.C. 794 and section 13 of the Federal Water Pollution Control Act Amendments of 1972, Public Law 92–500.

(d) *MBE/WBE requirements.* Requirements for the participation of minority and women owned businesses (MBE/WBEs) will apply to assistance in an amount equaling the grant. To attain compliance with MBE/WBE requirements, the RA will negotiate an overall ''fair share'' objective with the State for MBE/WBE participation on these

SRF funded activities. A fair share objective should be based on the amount of the capitalization grant award or other State established goals. The State may accomplish its fair share objective by requiring certain equivalency projects to undertake affirmative steps that will include the following:

(1) Including small, minority and women's businesses on solicitation lists;

(2) Assuring that small, minority and women's businesses are solicited whenever they are potential sources;

(3) Dividing total requirements, when economically feasible, into small tasks or quantities to permit maximum participation by small, minority and women's businesses;

(4) Establishing delivery schedules, when the requirements of the work permit, which will encourage participation by small, minority and women's businesses;

(5) Using the services of the Small Business Administration and the Office of Minority Business Enterprise of the U.S. Department of Commerce, as appropriate; and

(6) If the contractor awards subagreements, requiring the contractor to take the affirmative steps in paragraphs (d)(1) through (d)(5) of this section.

(e) *MBE/WBE Reporting requirements.* The State must submit an MBE/WBE Utilization Report (EPA Form SF 334) within 30 days after the end of each Federal fiscal quarter during which the State or its subrecipients award any subagreements.

§ 35.3150 Intended Use Plan (IUP).

(a) *Purpose.* The State must prepare a plan identifying the intended uses of the funds in the SRF and describing how those uses support the goals of the SRF. This Intended Use Plan (IUP) must be prepared annually and must be subjected to public comment and review before being submitted to EPA. EPA must receive the IUP prior to the award of the capitalization grant.

(b) *Contents*—(1) *List of projects.* (i) The IUP must contain a list of publicly owned treatment works projects on the State's project priority list developed pursuant to section 216 of the Act, to be constructed with SRF assistance. This list must include: the name of the community; permit number or other applicable enforceable requirement, if available; the type of financial assistance; and the projected amount of eligible assistance.

(ii) The IUP must also contain a list of the nonpoint source and national estuary protection activities under sections 319 and 320 of the Act that the State expects to fund from its SRF.

(iii) The IUP must provide information in a format and manner that is consistent with the needs of the Regional Offices.

(2) Short and long term goals. The IUP must describe the long and short term goals and objectives of the State's water pollution control revolving fund.

(3) Information on the SRF activities to be supported. The IUP must include information on the types of activities including eligible categories of costs to receive assistance, types of assistance to be provided, and SRF policies on setting the terms for the various types of assistance provided by the fund.

(4) Assurances and specific proposals. The IUP must provide assurances and specific proposals on the manner by which the State intends to meet the requirements of the following sections of this part: § 35.3135(c); § 35.3135(d); § 35.3135(e); § 35.3135(f); and § 35.3140.

(5) Criteria and method for distribution of funds.

(i) The IUP must describe the criteria and method established for the distribution of the SRF funds and the distribution of the funds available to the SRF among the various types of assistance the State will offer.

(ii) The IUP must describe the criteria and method the State will use to select section 212 treatment work project priority list and projects or programs to be funded as eligible activities for nonpoint sources and estuary protection management programs.

(c) *Amending the IUP.* The IUP project list may be changed during the year under provisions established in the IUP as long as the projects have been previously identified through the public participation process.

(Approved by the Office of Management and Budget under control number 2040–0118)

§ 35.3155 Payments.

(a) *Payment schedule.* The State must include with each application for a capitalization grant a draft payment schedule based on the State's projection of binding commitments in its IUP. The payment schedule and the specific criteria establishing the conditions under which the State may draw cash from its LOC shall be jointly established by the Agency and the State and included in the capitalization grant agreement. Changes to the payment schedule, which may be negotiated during the year, will be effected through an amendment to the grant agreement.

(b) *Estimated disbursements.* With the first application for a capitalization grant, the State shall submit a schedule that reflects, by quarters, the estimated disbursements from that grant for the year following the grant award date. At the end of the third quarter of each Federal fiscal year thereafter, the State must provide the Agency with a schedule of estimated disbursements for the following Federal fiscal year. The State must advise the Agency when significant changes from the schedule of estimated disbursements are anticipated. This schedule must be developed in conformity with the procedures applicable to cash draws in § 35.3160 and must be at a level of detail sufficient to allow the Agency and the State to jointly develop and maintain a forecast of cash draws.

(c) *Timing of payments.* Payments to the LOC from a particular grant will begin in the quarter in which the grant is awarded and will end no later than the earlier of eight quarters after the capitalization grant is awarded or twelve quarters after advices of allowances are issued to the Regions.

(d) *General payment and cash draw rules.* (1) Except as described in § 35.3160(e) and § 35.3160(g), payments will be based on the State's schedule of binding commitments.

(2) The SRF or assistance recipient must first incur a cost, but not necessarily disburse funds for that cost, on an activity for which the State has entered into a binding commitment, in order to draw cash.

(3) Cash draws will be available only up to the amount of payments made.

(4) For loans or for refinancing or purchasing of municipal debt, planning, design and associated pre-building costs that are within the scope of a project built after March 7, 1985, may be included in the assistance agreement regardless of when they were incurred, provided these costs are in conformity with title VI of the Act. The State may draw cash for these incurred pre-building costs immediately upon executing an assistance agreement.

(5) A State may draw cash from the LOC equal to the proportional Federal share at which time the State will provide its proportional share. The Federal proportional share will be 83⅓ percent of incurred costs and the State's proportional share will be 16⅔ percent of the incurred costs, except as described below.

(i) Where the State provides funds in excess of the required 20 percent match, the proportional Federal share drawn from the LOC will be the ratio of Federal funds in the capitalization grant to the sum of the capitalization grant and the State funds. Alternatively, the State may identify a group of activities approximately equal to 120 percent of the grant amount, and draw cash from the LOC for 83⅓ percent of the incurred costs of the identified activities.

(ii) The Federal proportional share may exceed 83⅓ percent where a State is given credit for its match amount as a result of funding activities in prior years (but after March 7, 1985), or for banking excess match in the SRF in prior years and disbursing these amounts prior to drawing cash. If the entire amount of the State's required match has been disbursed in advance, the Federal proportional share would be 100 percent.

§ 35.3160 Cash draw rules.

(a) *Loans.* The State may draw cash from the LOC when the SRF receives a request from a loan recipient, based on incurred costs, including prebuilding and building costs.

(b) *Refinance or purchase of municipal debt.* (1) Cash draw for completed construction. Except as indicated in paragraph (b)(2) of this section, cash draws shall be made at a rate no greater than equal amounts over the maximum

number of quarters that payments can be made, pursuant to § 35.3155(c), and up to the portion of the LOC committed to the refinancing or purchase of the local debt. Cash draws for incurred building costs will generally be treated as refinanced costs.

(2) The State may immediately draw cash for up to five percent of each fiscal year's capitalization grant or two million dollars, whichever is greater, to refinance or purchase local debt.

(3) Projects or portions of projects not constructed. The State may draw cash based on incurred construction costs, as set forth in § 35.3160(a).

(4) Incremental disbursement bonds. For the purchase of incremental disbursement bonds from local governments, cash draws will be based on a schedule that coincides with the rate at which construction related costs are expected to be incurred for the project.

(c) *Purchase of insurance.* The State may draw cash to purchase insurance as premiums are due.

(d) *Guarantees and security for bonds.* (1) Cash draw in the event of default. In the event of an imminent default in debt service payments on the guaranteed/secured debt, the State can draw cash immediately up to the total amount of the LOC committed to the guarantee/security. If a balance remains in the guarantee portion of the LOC reserve after the default is covered, the State must negotiate a revised schedule for the remaining amount of the guarantee/security.

(2) Cash draw in the absence of default. (i) The State can draw cash up to the amount of the LOC dedicated for the guarantee or security in accordance with a schedule based on the national title II annual outlay rate (Yr 1: 7%; Yr 2: 35%; Yr 3: 26%; Yr 4: 20%; Yr 5: 12%), or actual construction cost. In the latter case, the amount of the cash draw would be the actual construction costs multiplied by the Federal share of the reserve multiplied by the ratio of the reserve to either the amount guaranteed or the proceeds of the bond issue.

(ii) In addition, in the case of a security the State can identify a group of projects whose value equals approximately the total of that portion of the LOC and the State match dedicated as a security. The State can then draw cash based on the incurred construction costs of the selected projects only, multiplied by the ratio of the Federal portion of the security to the entire security.

(3) *Aggressive leveraging exception.* Where the cash draw rules discussed in § 35.3160(d) would significantly frustrate a State's program, the Agency may permit an exception to these cash draw rules and provide for a more accelerated cash draw, where the State can demonstrate that:

(i) There are eligible projects ready to proceed in the immediate future with enough costs to justify the amount of the secured bond issue;

(ii) The absence of cash on an accelerated basis will substantially delay these projects;

(iii) If accelerated cash draws are allowed, the SRF will provide substantially more assistance; and

(iv) The long term viability of the State program to meet water quality needs will be protected.

(4) *Cash draw limitation.* When the LOC is used for securing State issued bonds, cash draws cannot be made at a rate greater than equal amounts over the maximum number of quarters that payments can be made, pursuant to § 35.3155(c). Exceptions to this limitation are in cases of default (see § 35.3160(d)(1)) and where cash draws are based on construction costs for all projects, as in § 35.3160(d)(2)(i).

(e) *Administrative expenses.* (1) Payments. One payment will be made at the time of the grant, based on the portion of the LOC estimated to be used for administrative expenses.

(2) Cash draw. The State can draw cash based on a schedule that coincides with the rate at which administrative expenses will be incurred, up to that portion of the LOC dedicated to administrative expenses.

(f) *Withholding payments.* If a State fails to take corrective action in accordance with section 605 of the Act, the Agency shall withhold payments to the SRF. Once a payment has been made by the Agency, that payment and cash draws from that payment will not be subject to withholding because of a State's failure to take corrective action.

§ 35.3165 Reports and audits.

(a) *Annual report.* The State must provide an Annual Report to the RA beginning the first fiscal year after it receives payments under title VI. The State should submit this report to the RA according to the schedule established in the grant agreement.

(b) *Matters to establish in the annual report.* In addition to the requirements in section 606(d) of the Act, in its annual report the State must establish that it has:

(1) Reviewed all SRF funded section 212 projects in accordance with the approved environmental review procedures;

(2) Deposited its match on or before the date on which each quarterly grant payment was made;

(3) Assured compliance with the requirements of § 35.3135(f);

(4) Made binding commitments to provide assistance equal to 120 percent of the amount of each grant payment within one year after receiving the grant payment pursuant to § 35.3135(c);

(5) Expended all funds in an expeditious and timely manner pursuant to § 35.3135(d); and

(6) First used all funds as a result of capitalization grants to assure maintenance of progress toward compliance with the enforceable requirements of the Act pursuant to § 35.3135(e).

(c) *Annual review*—(1) *Purpose.* The purpose of the annual review is to assess the success of the State's performance of activities identified in the IUP and Annual Report, and to determine compliance with the terms of the capitalization grant agreement. The RA will complete the annual review according to the schedule established in the grant agreement.

(2) *Records access.* After reasonable notice by the RA, the State or assistance recipient must make available to the EPA such records as the RA reasonably requires to review and determine State compliance with the requirements of title VI. The RA may conduct onsite visits as needed to provide adequate programmatic review.

(d) *Annual audit.* (1) At least once a year the RA (through the Office of the Inspector General) will conduct, or require the State to have independently conducted, a financial and compliance audit of the SRF and the operations of the SRF. If the State is required to have an independently conducted audit performed, the State may designate an independent auditor of the State to carry out the audit or may contractually procure the service.

(2) The auditor can be a certified public accountant, a public accountant licensed on or before December 31, 1970, or a governmental auditor who meets the qualification standards (Government Auditing Standards). In addition, the auditor must meet the independence standard as enumerated by the General Accounting Office and American Institute of Certified Public Accountants. The Office of the Inspector General may arrange for an EPA audit if the State fails to conduct the audit or if the State's review is otherwise unsatisfactory.

(3) The audit report required under section 606(b) must contain an opinion on the financial statements of the SRF and its internal controls, and a report on compliance with title VI.

(4) The audit report must be completed within one year of the end of the appropriate accounting period and submitted to the Office of the Inspector General within 30 days of completion. In cases of State conducted audits, the State will be notified within 90 days as to the acceptability of the audit report and its findings. Audits may be done in conjunction with the Single Audit Act.

(Approved by the Office of Management and Budget under control number 2040–0118)

§ 35.3170 Corrective action.

(a) *Causes.* If the RA determines that the State has not complied with requirements under title VI, the RA will notify the State of such noncompliance and prescribe the necessary corrective action. Failure to satisfy the terms of the capitalization grant agreement, including unmet conditions or assurances or invalid certifications, is grounds for a finding of noncompliance. In addition, if the State does not manage the SRF in a financially sound manner (e.g. allows consistent and substantial failures of loan repayments), the RA may take corrective action as provided under this section.

(b) *RA's course of action.* In making a determination of noncompliance with

the capitalization grant agreement and devising the corrective action, the RA will identify the nature and cause of the problems. The State's corrective action must remedy the specific instance of noncompliance and adjust program management to avoid noncompliance in the future.

(c) *Consequences for failure to take corrective action.* If within 60 days of receipt of the noncompliance notice, a State fails to take the necessary actions to obtain the results required by the RA, or to provide an acceptable plan to achieve the results required, the RA shall withhold payments to the SRF until the State has taken acceptable actions. If the State fails to take the necessary corrective action deemed adequate by the RA within twelve months of receipt of the original notice, any withheld payments shall be deobligated and reallotted to other States.

(d) *Releasing payments.* Once the State has taken the corrective action deemed necessary and adequate by the RA, the withheld payments will be released and scheduled payments will recommence.

APPENDIX A—CRITERIA FOR EVALUATING A STATE'S PROPOSED NEPA-LIKE PROCESS

The following criteria will be used by the RA to evaluate a proposed SERP.

(A) *Legal foundation.* Adequate documentation of the legal authority, including legislation, regulations or executive orders and/or Attorney General certification that authority exists.

(B) *Interdisciplinary approach.* The availability of expertise either in-house or otherwise accessible to the State Agency.

(C) *Decision documentation.* A description of a documentation process adequate to explain the basis for decisions to the public.

(D) *Public notice and participation.* A description of the process, including routes of publication (e.g., local newspapers and project mailing list), and use of established State legal notification systems for notices of intent, and criteria for determining whether a public hearing is required. The adequacy of a rationale where the comment period differs from that under NEPA and is inconsistent with other State review periods.

(E) *Consider alternatives.* The extent to which the SERP will adequately consider:

(1) Designation of a study area comparable to the final system;

(2) A range of feasible alternatives, including the no action alternative;

(3) Direct and indirect impacts;

(4) Present and future conditions;

(5) Land use and other social parameters including recreation and open-space considerations;

(6) Consistency with population projections used to develop State implementation plans under the Clean Air Act;

(7) Cumulative impacts including anticipated community growth (residential, commercial, institutional and industrial) within the project study area; and

(8) Other anticipated public works projects including coordination with such projects.

Subpart L—[Reserved]

Subpart M—Grants for Technical Assistance

AUTHORITY: 42 U.S.C. 9617(e); sec. 9(g), E.O. 12580, 52 FR 2923, 3 CFR, 1987 Comp. P. 193.

SOURCE: 57 FR 45316, Oct. 1, 1992, unless otherwise noted.

§ 35.4000 Authority.

This subpart is issued under section 117(e) of the Comprehensive Environmental Response, Compensation, and Liability Act of 1980 (CERCLA), as amended, 42 U.S.C. 9617(e).

§ 35.4005 Purpose and availability of referenced material.

(a) This subpart codifies policies and procedures for Technical Assistance Grants (TAGs) awarded by EPA to groups of individuals. This subpart establishes the procedures for accepting and evaluating applications, and for awarding and managing TAGs. These provisions supplement the EPA general assistance regulations 40 CFR part 30 and 40 CFR part 33 and are applicable to all applicants/recipients of TAGs.

(b) Any reference to documents made in this subpart necessary to apply for a TAG (i.e., OMB Circulars and EPA forms SF–424, 269, 270) are available through EPA Headquarters and Regional Offices listed in 40 CFR 1.7.

§ 35.4010 Definitions.

As used in this subpart, the following words and terms shall have the meaning set forth below:

Affected means subject to an actual or potential health, economic or environmental threat arising from a release or a threatened release at a facility listed on the National Priorities List (NPL) or proposed for listing under the National Oil and Hazardous Substances Pollution Contingency Plan (NCP) where a response action under CERCLA has begun. Examples of affected parties include individuals who live in areas adjacent to NPL facilities whose health is or may be endangered by releases of hazardous substances at the facility, or whose economic interests are directly threatened or harmed.

Applicant means any group of individuals that files an application for a TAG.

Application means a completed formal written request for a TAG that is submitted to a State or the EPA on EPA form SF–424, Application for Federal Assistance (Non-construction Programs).

Award means the TAG agreement signed by both EPA and the recipient.

Award Official means the EPA official delegated the authority to sign grant agreements.

Budget means the financial plan for the spending of all Federal and matching funds (including in-kind contributions) for a TAG project as proposed by the applicant, and negotiated with and approved by the Award Official.

Budget period means the length of time specified in a grant agreement during which the recipient may spend or obligate Federal funds. The budget period may not exceed three (3) years. A TAG project period may be comprised of several budget periods.

Cash contribution means actual non-Federal dollars, or Federal dollars if expressly authorized by statute to do so, that a recipient spends for goods and services and real or personal property used to satisfy the matching funds requirement.

Contract means a written agreement between the recipient and another party (other than a public agency) for services or supplies necessary to complete the TAG project. Contracts include contracts and subcontracts for personal and professional services or supplies necessary to complete the TAG project, and agreements with consultants, and purchase orders.

Contractor means any party (e.g., Technical Advisor) to whom a recipient awards a contract.

EPA means the Environmental Protection Agency. Where a State administers the TAG Program, the term ''EPA'' may mean a State agency.

Federal facility means a facility that is owned or operated by a department, agency, or instrumentality of the United States.

Grant agreement means the legal document that transfers money, or anything of value, to a recipient to accomplish the purpose of the TAG project. It specifies budget and project periods, the Federal budget share of eligible project costs, a description of the work to be accomplished, and any terms and conditions.

In-kind contribution means the value of a non-cash contribution used to meet a recipient's matching funds requirement in accordance with 40 CFR 30.307(b). An in-kind contribution may consist of charges for equipment or the value of goods and services necessary to and directly benefiting the EPA-funded project.

Matching funds means the portion of allowable project costs that a recipient contributes toward completing the TAG project using non-Federal funds or Federal funds if expressly authorized by statute. The match may include in-kind as well as cash contributions.

Operable unit means a discrete action that comprises an incremental step toward comprehensively addressing site problems.

Potentially Responsible Party (PRP) means any individual(s) or company(ies) (such as owners, operators, transporters or generators) potentially responsible under sections 106 or 107 of CERCLA for the contamination problems at a Superfund site.

Recipient means any group of individuals that has been awarded a TAG.

Recipient's project manager means the person legally authorized to obligate the organization to the terms and conditions of EPA's regulations and the grant agreement, and designated by the recipient to serve as its principal contact with EPA.

Response action means all activities undertaken to address the problems created by hazardous substances at a National Priorities List site.

Start of response action means the point in time when there is a guarantee or set-aside of funding either by EPA, other Federal agencies, States, or PRPs in order to begin response activities at a site.

Waiver means excusing recipients from following certain anticipated regulatory or administrative requirements if; the authority to issue a waiver is provided in the regulation itself; and the Agency believes sufficient justification exists to approve such action. The Award Official has the authority to issue a waiver. Deviation means an exemption from certain provisions of existing regulations, which may be necessary in some unforeseen instances. The Director, Grants Administration Division, is authorized under 40 CFR 30.1001(b) to approve deviations from the requirements of regulations (except for those that implement statutory or executive order requirements) when such situations warrant special consideration.

§ 35.4013 Cost principles.

(a) Recipients and non-profit contractors must comply with the cost principles in OMB Circular A–122.

(b) Profit-making contractors and subcontractors must comply with the cost principles in the Federal Acquisition Regulation (48 CFR part 31).

§ 35.4015 State administration of the program.

(a) Effective October 1, 1992, the Agency will accept applications for and award TAGs in consultation with the States.

(b) The TAG Program will be available at an NPL site where a State response action is scheduled to begin or is underway and a CERCLA-funded cooperative or other written agreement exists between the Agency and the State.

(c) States wishing to administer the TAG Program must inform the appropriate EPA Regional administrator. If a State elects to administer the program, it must do so in conformity with this subpart. Where States administer the program, EPA will have an oversight role.

(d) A State that chooses to administer the TAG Program will receive technical assistance funds plus administrative costs from the Agency under a cooperative agreement. A State will receive $10,000 for administrative costs for the first TAG. For each subsequent TAG, the State will receive an amount equal to eight (8) percent of the TAG. Using the criteria established under this subpart, the State may select a qualified recipient and provide assistance in either of two ways:

(1) A State will pass through technical assistance funds to a recipient group by way of a subgrant, and reimburse the recipient group for its expenditures as provided at § 35.4080. A State that elects this option is also responsible for monitoring the subgrant to ensure that recipients comply with its terms and with 40 CFR parts 30 and 33; or

(2) If a recipient group agrees, a State will use TAG funds to obtain the services of a Technical Advisor and provide those services to a grant recipient in lieu of cash. The recipient group may work closely with the State in advertising, reviewing bids and recommending a Technical Advisor, and managing the Technical Advisor. The State will make the final selection of the technical advisor. A State that elects this option becomes directly responsible for awarding the technical assistance contracts, submitting financial and progress reports, and for disbursing all TAG funds in compliance with applicable EPA regulations and requirements.

§ 35.4020 Responsibility requirements.

(a) An applicant must meet the minimum administrative and management capability requirements 40 CFR 30.301. Thus each applicant must demonstrate that it has established reliable procedures or has plans for establishing reliable procedures for record–keeping and financial accountability related to the management of the TAG. These procedures must be in effect before the recipient incurs any costs. If EPA concludes that the applicant is not capable of meeting the responsibility requirements, the application will be rejected.

(b) Each recipient of a TAG must be incorporated as a non-profit organization for the purpose of addressing the Superfund site for which the grant is provided in order to receive a grant, except as provided in paragraph (c) of this section. At the time of award, a recipient must either be incorporated or must demonstrate to EPA that the group has filed the necessary documents for incorporation with the appropriate State agency. No later than the time of the first request for reimbursement for costs incurred, a recipient must submit proof to EPA that the group has been incorporated by the State.

(c) Unless a consolidation agreement makes site-specific incorporation necessary, a previously incorporated group that includes all the individuals and groups that joined in applying for the TAG shall not be required to reincorporate for the specific purpose of representing affected individuals at the site provided that the group can demonstrate that it has a substantial history of involvement at the site.

§ 35.4025 Eligible applicants.

Eligible applicants, except as provided in § 35.4030, are any group of individuals that may be affected by a release or a threatened release at any facility that is listed on the NPL or is proposed for listing under the NCP and at which a response action has begun.

§ 35.4030 Ineligible applicants.

(a) Potentially responsible parties (PRPs) are ineligible to receive or be represented in groups receiving or using TAGs.

(1) No group established or sustained by a PRP shall be eligible for a TAG.

(2) No group that receives services provided by or paid for by a PRP shall be eligible for a TAG.

(3) For an applicant to obtain a grant it must establish an identity separate from that of an entity that is ineligible under § 35.4030 (a)(1) or (2) by making a reasonable demonstration of independence from the ineligible entity. Such a demonstration requires, at a minimum, a showing that the applicant has a formal legal identity (e.g., officers) and a substantive existence, including finances, separate and distinct from that of the ineligible entity.

(b) The following groups and organizations are also ineligible to receive or be represented in groups receiving or using TAGs.

(1) Corporations that are not incorporated for the specific purpose of representing affected individuals at the site except as provided in § 35.4020(c);

(2) Academic institutions;

(3) Political subdivisions (e.g., townships and municipalities); and

(4) Groups established or presently sustained by ineligible entities under § 35.4030 (b) through (c) (including emergency planning committees and citizen advisory boards who may be precluded from acting independently).

(c) This section shall not preclude any individual affected by a Superfund site from participating in a recipient group in his or her capacity as an individual. However, an individual whose financial involvement in a PRP (as other than an employee or contractor) is determined by the Award Official to be sufficiently substantial may be precluded from participation in a recipient group in any capacity.

§ 35.4035 Evaluation criteria.

(a) EPA will award a TAG only after it has determined that all eligibility and responsibility requirements listed in §§ 35.4020, 35.4025, and 35.4030 are met, and after review of the applicant's qualifications in the narrative section of the grant application. Each applicant will be required to provide information on how it meets the eligibility criteria in the grant application. The ''Applicant Qualifications'' section is Part IV of SF–424.

(b) Sole Applicant. After the Letter of Intent process (see § 35.4040), if there is still only one group, the evaluation process will consist of the Agency ensuring that the applicant meets the criteria stated in § 35.4035(c) in addition to the administrative and management capability requirements, and can demonstrate that it is representative of the community affected by a release or a threatened release at a facility that is listed on the NPL or is proposed for listing under the NCP and where a response action has begun, as demonstrated by fulfillment of the criteria

in § 35.4035(c). Once these requirements have been met by the sole applicant, the Agency may award a TAG.

(c) Multiple Applicants. Where there are competing applicants EPA will evaluate the strengths and weaknesses of each applicant. EPA will rank each applicant relative to other applicants. Each criterion is assigned a weight showing its relative importance. EPA will rank each applicant by utilizing criteria described below. In order to qualify, applicants must meet criterion 1 and/or 5 and not score zero on criteria 2, 3, or 4.

(1) The presence of an actual or potential health threat posed to group members by the site (this criterion can be met by establishing a demonstrable threat to members' health or a reasonable belief that the site poses a substantial threat to their health) (30 points);

(2) The applicant best represents groups and individuals affected by the site (20 points);

(3) The identification of how the group plans to use the services of a Technical Advisor throughout the Superfund response action (20 points);

(4) The demonstrated intention and ability of the applicant to inform others in the community of the information provided by the Technical Advisor (20 points); and

(5) The presence of an actual or potential economic threat or threat of an impaired use or enjoyment of the environment to group members that is caused by the site (this criterion can be met by establishing a demonstrable economic or environmental threat to group members or a reasonable belief that the site poses a substantial economic or environmental threat) (10 points).

§ 35.4040 Notification process.

(a) Groups wishing to apply for a TAG should first submit a Letter of Intent (LOI) to EPA. EPA will respond in writing to an LOI. A grant application submitted by a community group without having first submitted an LOI will fulfill the LOI requirement, thus initiating the notification process.

(b) Upon receipt of the first LOI, EPA will undertake certain activities depending on the schedule for work at the site:

(1) If commencement of the remedial investigation or a removal action is not underway or scheduled to begin, EPA will advise the group in writing that grant applications for the site are not yet being accepted. EPA may informally notify other interested groups that it has received an LOI; or

(2) If a response action is already underway or scheduled to begin, EPA may conduct mailings and/or meetings, in addition to the required public notice, to provide formal notice to other interested parties that a grant for the site soon may be awarded. These formal notification activities will generally be conducted far enough in advance of the start of the response action to allow time for groups to consolidate, apply for and receive a grant award, and procure a Technical Advisor before work commences at the site.

(c) Other potential applicants will have 30 days to contact the original applicant to form a coalition. If the community groups are unable to form a coalition, they must notify EPA within the 30 days. EPA will then accept separate applications from all interested groups for an additional 30-day period. EPA may consider written requests for extensions of this time. If there is a qualified applicant, a grant will be awarded from among the competing applications based on the evaluation criteria described in § 35.4035. The schedule for response activities at a site will not be affected by the TAG application process.

§ 35.4045 Submission of application.

(a) After meeting the LOI requirement, the applicant must then submit a TAG application on SF–424.

(b) An applicant must submit a budget clearly showing the proposed expenditure of funds, how it will provide the cash and/or in-kind contributions to meet the ''match'' requirement, and how the funds and other resources, including the ''match'' will be used to complete the TAG project. As part of the application process, the applicant must submit the following certifications:

(1) Drug-Free Workplace,

(2) Debarment, Suspension, and Other Responsibility Matters, and

(3) Anti-Lobbying (if the grant is $100,000 or more).

§ 35.4050 Timing of award.

An award of a TAG will be made no earlier than the start of the response action. Grants to qualified applicants could be delayed depending upon the availability of funds for the Superfund program.

§ 35.4055 Ineligible activities.

The following activities are ineligible for assistance under this program:

(a) Litigation or underwriting legal actions such as paying for attorney fees or paying for the time of the Technical Advisor to assist an attorney in preparing a legal action or preparing for and serving as an expert witness at any legal proceeding regarding or affecting the site;

(b) Political activity and lobbying in accordance with OMB Circular A–122;

(c) Other activities inconsistent with the cost principles stated in OMB Circular A–122, ''Cost Principles for Non–Profit Organizations'';

(d) Tuition or other expenses for recipient group members or Technical Advisors to attend training, seminars or courses, except for required Health and Safety training for the Technical Advisor to allow access to the local Superfund site, provided written permission is obtained in advance from the Regional EPA Office. Training may be approved for one time only at an amount not to exceed $1,000.00;

(e) Any activities or expenditures for recipient group members' travel;

(f) Generation of new primary data such as well drilling and testing, including split sampling;

(g) Reopening final Agency decisions such as the Records of Decision or conducting disputes with the Agency in accordance with its dispute resolution procedures set forth at 40 CFR part 30, subpart L; and

(h) Epidemiological or health studies, such as blood or urine testing.

§ 35.4060 Eligible activities.

TAGs may be used to obtain technical assistance in interpreting information with regard to the nature of the hazard, remedial investigation and feasibility study, record of decision, remedial design, selection and construction of remedial action, operation and maintenance, or a significant removal action at a facility that is listed on the NPL or proposed for listing and at which a response action has begun. TAGs shall be used to fund activities that will contribute to the public's ability to participate in the decision-making process by improving the public's understanding of overall conditions and activities.

§ 35.4065 Technical advisor's qualifications.

(a) A Technical Advisor must possess the following credentials:

(1) Demonstrated knowledge of hazardous or toxic waste issues;

(2) Academic training in a relevant discipline (e.g., biochemistry, toxicology, environmental sciences, engineering); and

(3) Ability to translate technical information into terms understandable to lay persons.

(b) A Technical Advisor should possess the following credentials:

(1) Experience working on hazardous or toxic waste problems;

(2) Experience in making technical presentations;

(3) Demonstrated writing skills; and

(4) Previous experience working with affected individuals or community groups or other groups of individuals.

§ 35.4066 Procurement.

(a) *Competition*. (1) The recipient must provide maximum open and free competition.

(2) Recipients must not unduly restrict or eliminate competition.

(3) The individual(s) developing the specifications will be excluded from competition for the Technical Advisor and/or Grant Administrator position.

(b) *Documentation*. Recipients must document all procurement activities with written records that furnish reasons for decisions.

(c) *Cost*. (1) The recipient must determine that all costs are reasonable.

(2) The recipient must conduct a cost analysis of all contracts over $25,000 and all change orders regardless of dollar value.

(d) *Debarment.* Recipients and contractors must not make any contract at any time to anyone who is on the ''List of Parties Excluded from Federal Procurement or Nonprocurement Programs.''

(e) *Recipient responsibility.* (1) The recipient is responsible for the settlement and satisfactory completion of all contractual and administrative issues arising out of contracts entered into under a grant.

(2) The recipient must ensure that the contractor(s) perform in accordance with the terms and conditions of the contract.

(f) *Responsible contractors.* The recipient shall award contracts only to responsible contractors that possess the potential ability to perform successfully under the terms and conditions of a proposed contract.

(g) *Disadvantaged business enterprises.* The recipient shall comply with the ''Small, Minority, Women's, and Labor Surplus Area Business'' requirements in § 33.240.

(h) *Illegal contracts.* Recipients may not award cost-plus-percentage-of-cost or percentage-of-construction-cost contracts.

(i) *Contract provisions.* The recipient must include the following provisions in each contract:

(1) Statement of work;

(2) Schedule for performance;

(3) Due dates for deliverables;

(4) Total cost of the contract;

(5) Payment provisions; and

(6) The following clauses from 40 CFR 33.1030, ''Model contract clauses'':

(i) Supersession;

(ii) Privity of Contract;

(iii) Termination;

(iv) Remedies;

(v) Audit, Access to Records;

(vi) Covenant Against Contingent Fees;

(vii) Gratuities;

(viii) Responsibility of the Contractor; and

(ix) Final Payment.

(j) *Subcontracting.* A contractor must comply with the following provisions in its award of subcontracts (these requirements do not apply to subcontractors for the supply of materials to produce equipment, materials, and subcontracts for catalog, off-the-shelf, or manufactured items.):

(1) Section 35.4066(b) Documentation;

(2) Section 35.4066(c) Cost;

(3) Section 35.4066(d) Debarment;

(4) Section 35.4066(f) Responsible contractor;

(5) Section 35.4066(g) Disadvantaged business enterprises;

(6) Section 35.4066(i) Illegal contracts; and

(7) Section 35.4066(j) Contract provisions.

(k) *Bid protests.* The recipient must establish a procedure for resolving protests which complies with the provisions of 40 CFR part 33, Subpart G—Protests.

(l) *Competitive procurements.* Recipients shall not divide any procurements into smaller parts to get under any dollar limit.

(1) If the aggregate amount of the purchase is $1,000 or less, the recipient may make the purchase as long as the recipient determines that the price is reasonable. No oral or written solicitations are necessary.

(2) If the aggregate amount of the proposed contract is over $1,000 but less than $25,000, the recipient must obtain and document oral or written price quotations from two or more qualified sources.

(3) If the aggregate amount of the proposed contract is $25,000 to $50,000, the recipient must:

(i) Solicit written bids from three or more sources who are willing and able to do the work;

(ii) Provide potential sources the scope of the work to be performed and the criteria the recipient will use to evaluate bids;

(iii) Objectively evaluate all bids submitted; and

(iv) Notify all unsuccessful bidders.

(4) If the aggregate amount of the proposed contract is greater than $50,000, the recipient must follow the procurement rules in 40 CFR part 33.

(m) *Non-competitive procurements.* If an adequate number of potential sources cannot be identified, the recipient may request written authority from the EPA Award Official to award a contract to a sole bidder.

§ 35.4067 Contract review.

Each applicant must inform EPA of any proposed contract over $1000 and must provide EPA the opportunity to review the contract before it is awarded or amended.

§ 35.4070 Sanctions.

If EPA determines that the recipient has failed to comply with any terms of the grant agreement, EPA will initiate an appropriate measure as set forth at 40 CFR part 30, subpart I.

§ 35.4075 Pre-award costs.

(a) Grant funds may not be used to pay costs incurred prior to award of the TAG, except as provided in paragraph (b) of this section.

(b) Necessary and reasonable costs of incorporation, if incurred for the sole purpose of complying with this subpart, will be eligible pre-award costs and may be charged to the TAG or count toward the matching funds requirement described in § 35.4085(a)(2).

§ 35.4080 Method of payment.

All grant recipients shall be reimbursed for grant-related eligible, allocable, allowable, and reasonable costs up to the amount of the TAG which have been incurred and which the recipients are currently and legally obligated to pay. Recipients may submit monthly or quarterly requests for reimbursement to the Agency on SF–270—Request for Advance or Reimbursement, or the appropriate State form if the State is administering the TAG Program. Costs incurred greater than $500 may be submitted monthly.

§ 35.4085 Grant limitations.

TAGs will be awarded subject to the following limitations:

(a) The recipient must contribute 20 percent of the total costs of the TAG project, except as provided in § 35.4090(b).

(1) Absent specific statutory authority, no Federal funds may be included in the matching share.

(2) To meet the matching funds requirement, the recipient may use cash and/or in-kind contributions.

(b) The TAG award will not initially exceed $50,000 for a single recipient, except in the case of a single application covering multiple sites.

(c) Not more than one TAG may be awarded for any site.

(d) Administrative costs of the grant may not exceed 20 percent of project costs. Administrative costs may include, but are not limited to, paying an individual(s) to administer the grant.

§ 35.4090 Waivers.

(a) Waivers of the $50,000 per recipient limit may be granted under either or both of the following circumstances:

(1) *Multiple sites.* In order to reduce the administrative burden to a recipient group where there are several eligible sites geographically close to each other, the limitation that a single recipient may not receive more than $50,000 may be waived by the Agency (e.g., 3 sites x $50,000 = grant of $150,000).

(2) *Complex sites.* The Award Official may waive the $50,000 per recipient limit if the recipient group demonstrates that the site is especially complex and that the following criteria have been met:

(i) Site(s) characteristics indicate that due to the nature or volume of the site-related information for review, additional funds are necessary;

(ii) The recipient's management of any previous TAG award(s) was satisfactory and that costs incurred under the previous award are allowable and reasonable; and

(iii) No recipient group may receive more than $100,000 in TAG awards for any one site.

(b) Waivers of the Matching Funds Requirement. The Award Official may waive all or part of the recipient's matching funds requirement only after establishing that:

(1) There is a need for a waiver because providing the ''match''would constitute an unusual financial hardship;

(2) A good faith effort at raising the ''match,'' including obtaining in-kind services, has failed; and

(3) The waiver is necessary to facilitate public participation in the selection of remedial action at the facility.

(c) Where a TAG recipient subsequently obtains a waiver of the matching funds requirement, the grant agreement must be amended. (See 40 CFR part 30, subpart G.)

(d) No waivers of the matching funds requirement will be granted by the Agency once the Record of Decision has been issued at the last operable unit at the site.

§ 35.4100 Disputes.

(a) If the Agency administers the TAG Program, the Agency shall review disputes between Agency officials and the applicant or recipient in accordance with its dispute resolution procedures set forth at 40 CFR part 30, subpart L.

(b) If the State administers the TAG Program, any applicant or recipient who has been adversely affected by a State's action or omission may request Agency review of such action or omission, but must first submit a petition for review to the State agency that made the initial decision. The State must provide, in writing, normally within 45 days of the date it receives the petition, the basis for its decision regarding the disputed action or omission. The final State decision must be labeled as such and, if adverse to the applicant or recipient, must include notice of the right to request Agency review of the State decision under this section. A State's failure to address the disputed action or omission in a timely fashion, or in writing, will not preclude Agency review.

(1) Requests for Agency review must include:

(i) A copy of any written State decision;

(ii) A statement of the amount in dispute;

(iii) A description of the issues involved; and

(iv) A concise statement of the objections to the State decision.

(2) The request must be filed by registered mail, return receipt requested, within 30 days of the date of the State decision or within a reasonable time if the State fails to respond in writing to the request for review.

(c) The Agency shall determine whether the State's review is comparable to a Dispute Decision Official's (DDO) review pursuant to 40 CFR part 30, subpart L. If the State's review is comparable, the Regional Administrator will conduct the Agency's review of the State's decision. If the State's review is not comparable, an Agency DDO will review the State's decision and issue a written decision. If the Agency DDO issues a decision, the applicant or recipient may request a Regional Administrator's review of the decision. The applicant or recipient may request an EPA Assistant Administrator review of a Regional Administrator's decision pursuant to subpart L.

§ 35.4105 Record retention and audits.

(a) *Records and audit-recipient.* (1) Each recipient shall keep and preserve full written financial records accurately disclosing the amount and the disposition of any funds, whether in cash or in-kind, applied to the TAG project, and shall comply with the terms and conditions of the grant agreement.

(2) Such records shall be retained for ten (10) years from the date of the final Financial Status Report, or until any audit, litigation, cost–recovery, and/or any disputes initiated before the end of the 10-year retention period are settled, whichever is longer. A recipient must obtain EPA's prior written approval to destroy records after the record retention period.

(3) Recipients must comply with OMB Circular A–133 ''Audits of Institutions of Higher Education and Other Non-profit Organizations,'' for all grants over $25,000.

(b) *Records and audit-contractor(s).* (1) The recipient shall require its contractor(s) to keep and preserve detailed records in connection with the contract, reflecting acquisitions, work progress, reports, expenditures, and commitments and indicating their relationship to established costs and schedules.

(2) Contractors must retain records for a period of 10 years after the termination or end of the contract.

(Approved by the Office of Management and Budget under control number 2030–0020)

§ 35.4110 Reports.

(a) *Progress reports.* Each recipient shall submit quarterly progress reports

to EPA for the TAG project 45 days after the end of each calendar quarter. Progress reports shall fully describe in chart or narrative format the progress achieved in relationship to the approved schedule, budget, and the TAG project milestones. Special problems encountered must be explained.

(b) *Financial status report.* Each recipient shall submit to EPA a financial status report annually, within 90 days after the anniversary date of the start of the TAG project, and within 90 days after the end of the grant budget period and project. A recipient shall submit to the EPA a financial status report on SF–269 or on the appropriate State form if the State is administering the TAG Program.

(c) *Final report.* Each recipient shall submit to EPA a draft of the final report for review no later than 90 days prior to the end of the TAG project and a final report within 90 days of the end of the project. The report shall document TAG project activities over the entire period of grant support and shall describe the recipient's achievements with respect to stated TAG project purposes and objectives.

(Approved by the Office of Management and Budget under control number 2030–0020)

§ 35.4115 Availability of information.

Each recipient shall ensure that all final written products developed by a contractor for the recipient under its grant are disseminated by providing copies of such documents to EPA for the local Superfund information repository(ies).

§ 35.4120 Budget period.

The budget period may not exceed three years. A TAG project period may be comprised of more than one three-year budget period.

§ 35.4125 Federal facilities.

EPA will use the criteria found in § 35.4025 in evaluating the eligibility of any group of individuals who may be affected by a release or a threatened release at a Federal facility for a TAG under this subpart.

§ 35.4130 Conflict of interest and disclosure requirements.

(a) The recipient shall require each prospective contractor on any contract to provide, with its bid or proposal:

(1) Information on its financial and business relationship with all PRPs at the site, and with their parent companies, subsidiaries, affiliates, subcontractors, contractors, and current clients or attorneys and agents. This disclosure requirement encompasses past and anticipated financial and business relationships, including services related to any proposed or pending litigation, with such parties;

(2) Certification that, to the best of its knowledge and belief, it has disclosed such information or no such information exists; and

(3) A statement that it shall disclose immediately any such information discovered after submission of its bid or after award. The recipient shall evaluate such information and shall exclude any prospective contractor if the recipient determines the prospective contractor's conflict of interest is significant and cannot be avoided or otherwise resolved.

(b) Contractors and subcontractors may not be Technical Advisors to recipient groups at the same NPL site for which they are doing work for the Federal or State government or any other entity.

Subpart N—[Reserved]

Subpart O—Cooperative Agreements and Superfund State Contracts for Superfund Response Actions

AUTHORITY: 42 U.S.C. 9601 *et seq.*

SOURCE: 55 FR 23007, June 5, 1990, unless otherwise noted.

GENERAL

§ 35.6000 Authority.

This regulation is issued under section 104 of the Comprehensive Environmental Response, Compensation, and Liability Act of 1980 (42 U.S.C. 9601 *et seq.*, Pub. L. 96–510, December 11, 1980, otherwise referred to as ''CERCLA''),

as amended by the Superfund Amendments and Reauthorization Act of 1986 (Pub. L. 99–499, October 17, 1986; 100 Stat. 1613, otherwise referred to as ''SARA'').

All references to CERCLA within this regulation are meant to indicate CERCLA, as amended by SARA.

§ 35.6005 Purpose and scope.

(a) This regulation codifies recipient requirements for administering CERCLA-funded Cooperative Agreements. This regulation also codifies requirements for administering Superfund State Contracts (SSCs) for non-State-lead remedial responses undertaken pursuant to section 104 of CERCLA.

(b) The requirements in this regulation do not apply to Technical Assistance Grants (TAGs) or to CERCLA research and development grants, including the Superfund Innovative Technology Evaluation (SITE) Demonstration Program.

(c) 40 CFR part 31, ''Uniform Administrative Requirements for Grants and Cooperative Agreements to State and Local Governments,'' establishes consistency and uniformity among Federal agencies in the administration of grants and Cooperative Agreements to State, local, and Indian Tribal governments. For CERCLA-funded Cooperative Agreements, this subpart supplements the requirements contained in part 31 for States, political subdivisions thereof, and Indian Tribes. This regulation references those sections of part 31 that are applicable to CERCLA-funded Cooperative Agreements.

(d) Superfund monies for remedial actions cannot be used by recipients for Federal facility cleanup activities. When a cleanup is undertaken by another Federal entity, the State, political subdivision or Indian Tribe can pursue funding for its involvement in response activities from the appropriate Federal entity.

§ 35.6010 Eligibility.

This regulation applies to States, political subdivisions and Indian Tribes. Indian Tribes are only eligible to receive Superfund Cooperative Agreements or Superfund State Contracts when they are Federally recognized, and when they meet the criteria set forth in § 300.515(b) of the NCP. Although section 126 of CERCLA provides that the governing body of an Indian Tribe shall be afforded substantially the same treatment as a State, in this subpart Indian Tribes are not included in the definition of State in order to clarify those requirements with which Indian Tribes must comply and those with which they need not comply.

§ 35.6015 Definitions.

(a) As used in this subpart, the following words and terms shall have the meanings set forth below:

(1) *Activity.* A set of CERCLA-funded tasks that makes up a segment of the sequence of events undertaken in determining, planning, and conducting a response to a release or potential release of a hazardous substance. These include Core Program, pre-remedial (i.e. preliminary assessments and site inspections), support agency, remedial investigation/feasibility studies, remedial design, remedial action, removal, and enforcement activities.

(2) *Allowable costs.* Those project costs that are: Eligible, reasonable, necessary, and allocable to the project; permitted by the appropriate Federal cost principles; and approved by EPA in the Cooperative Agreement and/or Superfund State Contract.

(3) *Architectural or engineering (A/E) services.* Consultation, investigations, reports, or services for design-type projects within the scope of the practice of architecture or professional engineering as defined by the laws of the State or territory in which the recipient is located.

(4) *Award official.* The EPA official with the authority to execute Cooperative Agreements and Superfund State Contracts (SSCs) and to take other actions authorized by EPA Orders.

(5) *Budget period.* The length of time EPA specifies in a Cooperative Agreement during which the recipient may expend or obligate Federal funds.

(6) *CERCLA.* The Comprehensive Environmental Response, Compensation, and Liability Act of 1980 (42 U.S.C. 9601–9657, Pub. L. 96–510, Dec. 11, 1980), as amended by the Superfund Amendments and Reauthorization Act of 1986

(Pub. L. 99–499, Oct. 17, 1986; 100 Stat. 1613).

(7) *Change order.* A written order issued by a recipient, or its designated agent, to its contractor authorizing an addition to, deletion from, or revision of, a contract, usually initiated at the contractor's request.

(8) *Claim.* A demand or written assertion by a contractor seeking, as a matter of right, changes in contract duration, costs, or other provisions, which originally have been rejected by the recipient.

(9) *Closeout.* The final EPA or recipient actions taken to assure satisfactory completion of project work and to fulfill administrative requirements, including financial settlement, submission of acceptable required final reports, and resolution of any outstanding issues under the Cooperative Agreement and/or Superfund State Contract.

(10) *Community Relations Plan (CRP).* A management and planning tool outlining the specific community relations activities to be undertaken during the course of a response. It is designed to provide for two-way communication between the affected community and the agencies responsible for conducting a response action, and to assure public input into the decision-making process related to the affected communities.

(11) *Construction.* Erection, building, alteration, repair, remodeling, improvement, or extension of buildings, structures or other property.

(12) *Contract.* A written agreement between an EPA recipient and another party (other than another public agency) or between the recipient's contractor and the contractor's first tier subcontractor.

(13) *Contractor.* Any party to whom a recipient awards a contract.

(14) *Cooperative Agreement.* A legal instrument EPA uses to transfer money, property, services, or anything of value to a recipient to accomplish a public purpose in which substantial EPA involvement is anticipated during the performance of the project.

(15) *Core Program Cooperative Agreement.* A Cooperative Agreement that provides funds to a State or Indian Tribe to conduct CERCLA implementation activities that are not assignable to specific sites, but are intended to support a State's ability to participate in the CERCLA response program.

(16) *Cost analysis.* The review and evaluation of each element of contract cost to determine reasonableness, allocability, and allowability.

(17) *Cost share.* The portion of allowable project costs that a recipient contributes toward completing its project (i.e., non-Federal share, matching share).

(18) *Equipment.* Tangible, nonexpendable, personal property having a useful life of more than one year and an acquisition cost of $5,000 or more per unit.

(19) *Excess property.* Any property under the control of a Federal agency that is not required for immediate or foreseeable needs and thus is a candidate for disposal.

(20) *Fair market value.* The amount at which property would change hands between a willing buyer and a willing seller, neither being under any compulsion to buy or sell and both having reasonable knowledge of the relevant facts. Fair market value is the price in cash, or its equivalent, for which the property would have been sold on the open market.

(21) *Health and safety plan.* A plan that specifies the procedures that are sufficient to protect on-site personnel and surrounding communities from the physical, chemical, and/or biological hazards of the site. The health and safety plan outlines:

(i) Site hazards;

(ii) Work areas and site control procedures;

(iii) Air surveillance procedures;

(iv) Levels of protection;

(v) Decontamination and site emergency plans;

(vi) Arrangements for weather-related problems; and

(vii) Responsibilities for implementing the health and safety plan.

(22) *In-kind contribution.* The value of a non-cash contribution (generally from third parties) to meet a recipient's cost sharing requirements. An in-kind contribution may consist of charges for real property and equipment or the value of goods and services directly benefiting the CERCLA-funded project.

(23) *Indian Tribe.* As defined by section 101(36) of CERCLA, any Indian Tribe, band, nation, or other organized group or community, including any Alaska Native village but not including any Alaska Native regional or village corporation, which is recognized as eligible for the special programs and services provided by the United States to Indians because of their status as Indians.

(24) *Intergovernmental Agreement.* Any written agreement between units of government under which one public agency performs duties for or in concert with another public agency using EPA assistance. This includes substate and interagency agreements.

(25) *Lead agency.* The Federal agency, State agency, political subdivision, or Indian Tribe that has primary responsibility for planning and implementing a response action under CERCLA.

(26) *Minority Business Enterprise (MBE).* A business which is:

(i) Certified as socially and economically disadvantaged by the Small Business Administration;

(ii) Certified as a minority business enterprise by a State or Federal agency; or

(iii) An independent business concern which is at least 51 percent owned and controlled by minority group member(s). A minority group member is an individual who is a citizen of the United States and one of the following:

(A) Black American;

(B) Hispanic American (with origins from Puerto Rico, Mexico, Cuba, South or Central America);

(C) Native American (American Indian, Eskimo, Aleut, native Hawaiian); or

(D) Asian-Pacific American (with origins from Japan, China, the Philippines, Vietnam, Korea, Samoa, Guam, the U.S. Trust Territories of the Pacific, Northern Marianas, Laos, Cambodia, Taiwan or the Indian subcontinent).

(27) *National Priorities List (NPL).* EPA's list of the most serious uncontrolled or abandoned hazardous waste sites identified for possible long-term remedial action under Superfund. A site must be on the NPL to receive money from the Trust Fund for remedial action. The list is based primarily on the score a site receives from the Hazard Ranking System.

(28) *Operable unit.* A discrete action, as described in the Cooperative Agreement or SSC, that comprises an incremental step toward comprehensively addressing site problems. The cleanup of a site can be divided into a number of operable units, depending on the complexity of the problems associated with the site. Operable units may address geographical portions of a site, specific site problems, or initial phases of an action, or may consist of any set of actions performed over time or any actions that are concurrent but located in different parts of a site.

(29) *Operation and maintenance (O&M).* Measures required to maintain the effectiveness of response actions.

(30) *Personal property.* Property other than real property. It includes both supplies and equipment.

(31) *Political subdivision.* The unit of government that the State determines to have met the State's legislative definition of a political subdivision.

(32) *Potentially Responsible Party (PRP).* Any individual(s), or company(ies) identified as potentially liable under CERCLA for cleanup or payment for costs of cleanup of Hazardous Substance sites. PRPs may include individual(s), or company(ies) identified as having owned, operated, or in some other manner contributed wastes to Hazardous Substance sites.

(33) *Price analysis.* The process of evaluating a prospective price without regard to the contractor's separate cost elements and proposed profit. Price analysis determines the reasonableness of the proposed contract price based on adequate price competition, previous experience with similar work, established catalog or market price, law, or regulation.

(34) *Profit.* The net proceeds obtained by deducting all allowable costs (direct and indirect) from the price. (Because this definition of profit is based on applicable Federal cost principles, it may vary from many firms' definition of profit, and may correspond to those firms' definition of ''fee.'')

(35) *Project.* The activities or tasks EPA identifies in the Cooperative Agreement and/or Superfund State Contract.

(36) *Project manager.* The recipient official designated in the Cooperative Agreement or SSC as the program contact with EPA.

(37) *Project officer.* The EPA official designated in the Cooperative Agreement as EPA's program contact with the recipient. Project officers are responsible for monitoring the project.

(38) *Project period.* The length of time EPA specifies in the Cooperative Agreement and/or Superfund State Contract for completion of all project work. It may be composed of more than one budget period.

(39) *Quality Assurance Project Plan.* A written document, associated with remedial site sampling, which presents in specific terms the organization (where applicable), objectives, functional activities, and specific quality assurance and quality control activities and procedures designed to achieve the data quality objectives of a specific project(s) or continuing operation(s).

(40) *Real property.* Land, including land improvements, structures, and appurtenances thereto, excluding movable machinery and equipment.

(41) *Recipient.* Any State, political subdivision thereof, or Indian Tribe which has been awarded and has accepted an EPA Cooperative Agreement.

(42) *Services.* A recipient's in-kind or a contractor's labor, time, or efforts which do not involve the delivery of a specific end item, other than documents (e.g., reports, design drawings, specifications). This term does not include employment agreements or collective bargaining agreements.

(43) *Small business.* A business as defined in section 3 of the Small Business Act, as amended (15 U.S.C. 632).

(44) *State.* The several States of the United States, the District of Columbia, the Commonwealth of Puerto Rico, Guam, American Samoa, the Virgin Islands, the Commonwealth of Northern Marianas, and any territory or possession over which the United States has jurisdiction.

(45) *Statement of Work (SOW).* The portion of the Cooperative Agreement application and/or Superfund State Contract that describes the purpose and scope of activities and tasks to be carried out as a part of the proposed project.

(46) *Subcontractor.* Any first tier party that has a contract with the recipient's prime contractor.

(47) *Superfund State Contract (SSC).* A joint, legally binding agreement between EPA and another party(s) to obtain the necessary assurances before an EPA-lead remedial action or any political subdivision-lead activities can begin at a site, and to ensure State or Indian Tribe involvement as required under CERCLA section 121(f).

(48) *Supplies.* All tangible personal property other than equipment as defined in this subpart.

(49) *Support agency.* The agency that furnishes necessary data to the lead agency, reviews response data and documents, and provides other assistance to the lead agency.

(50) *Task.* An element of a Superfund response activity identified in the Statement of Work of a Superfund Cooperative Agreement or a Superfund State Contract.

(51) *Title.* The valid claim to property which denotes ownership and the rights of ownership, including the rights of possession, control, and disposal of property.

(52) *Unit acquisition cost.* The net invoice unit price of the property including the cost of modifications, attachments, accessories, or auxiliary apparatus necessary to make the property usable for the purpose for which it was acquired. Other charges, such as the cost of installation, transportation, taxes, duty, or protective in-transit insurance, shall be included or excluded from the unit acquisition cost in accordance with the recipient's regular accounting practices.

(53) *Value engineering.* A systematic and creative analysis of each contract term or task to ensure that its essential function is provided at the overall lowest cost.

(54) *Women's Business Enterprise (WBE).* A business which is certified as a Women's Business Enterprise by a State or Federal agency, or which meets the following definition. A Women's Business Enterprise is an independent business concern which is at least 51 percent owned by a woman or women who also control and operate it. Determination of whether a business is at least 51 percent owned by a woman

or women shall be made without regard to community property laws.

(b) Those terms not defined in this section shall have the meanings set forth in section 101 of CERCLA, 40 CFR part 31 and 40 CFR part 300 (the National Contingency Plan).

§ 35.6020 Other statutory provisions.

The recipient must comply with the Federal laws described in 40 CFR 31.13, Principal Environmental Statutory Provisions; Public Law 98–473, as implemented in the Department of Interior, Bureau of Indian Affairs, regulation at 25 CFR part 20; 25 CFR part 20 and with other applicable statutory provisions.

§ 35.6025 Deviation from this subpart.

On a case-by-case basis, EPA will consider requests for an official deviation from the non-statutory provisions of this regulation. Refer to the requirements regarding additions and exceptions described in 40 CFR 31.6 (b), (c), and (d).

PRE-REMEDIAL RESPONSE COOPERATIVE AGREEMENTS

§ 35.6050 Eligibility for pre-remedial Cooperative Agreements.

States, political subdivisions, and Indian Tribes may apply for pre-remedial response Cooperative Agreements.

§ 35.6055 State-lead pre-remedial Cooperative Agreements.

(a) To receive a State-lead pre-remedial Cooperative Agreement, the applicant must submit an ''Application for Federal Assistance'' (SF–424) for non-construction programs. Applications for additional funding need include only the revised pages. The application must include the following:

(1) *Budget sheets* (SF–424A);

(2) *A Project narrative statement,* including the following:

(i) *A list of sites* at which the applicant proposes to undertake pre-remedial tasks. If the recipient proposes to revise the list, the recipient may not incur costs on a new site until the project officer has approved the site;

(ii) *A Statement of Work (SOW)* which must include a detailed description, by task, of activities to be conducted, the projected costs associated with each task, the number of products to be completed, and a quarterly schedule indicating when these products will be submitted to EPA;

(iii) *A schedule of deliverables.*

(3) *Drug-Free Workplace Certification.* The applicant must certify (40 CFR part 32, subpart F) that it is in compliance with the Drug-Free Workplace Act of 1988 (Pub. L. 100–690, title V, subtitle D), which requires applicants to certify in writing that they will provide a drug-free workplace. The applicant must follow the requirements contained in the OMB notice entitled ''Government-wide Implementation of the Drug-Free Workplace Act of 1988'' published January 31, 1989.

(4) *Certification Regarding Debarment, Suspension, and Other Responsibility Matters (EPA Form 5700–49).* The applicant must certify that it is in compliance with Executive Order 12549 and 40 CFR part 32.

(5) *Procurement Certification.* The applicant must evaluate its own procurement system to determine if the system meets the intent of the requirements of this subpart. After evaluating its procurement system, the applicant or recipient must complete the ''Procurement System Certification'' (EPA Form 5700–48) and submit the form to EPA with its application.

(6) *Anti-Lobbying Certification.* The applicant must certify (40 CFR part 34, appendix A) that no appropriated funds will be expended to pay any person for influencing or attempting to influence an officer or employee of any agency, a Member of Congress, an officer or employee of Congress, or an employee of a Member of Congress, in connection with any Federal award in excess of $100,000, in accordance with section 319 of Public Law 101–121. The applicant must follow the requirements in the Interim Final Rule entitled, ''New Restrictions on Lobbying'' published on February 26, 1990.

(b) *Pre-remedial Cooperative Agreement requirements.* The recipient must comply with all terms and conditions in the Cooperative Agreement, and with the following requirements:

(1) *Health and safety plan.* (i) Before beginning field work, the recipient must have a health and safety plan in

place providing for the protection of on-site personnel and area residents. This plan need not be submitted to EPA, but must be made available to EPA upon request.

(ii) The recipient's health and safety plan must comply with Occupational Safety and Health Administration (OSHA) 29 CFR 1910.120, entitled ''Hazardous Waste Operations and Emergency Response,'' unless the recipient is an Indian Tribe which is exempt from OSHA requirements.

(2) *Quality assurance.* (i) The recipient must comply with the quality assurance requirements described in 40 CFR 31.45.

(ii) The recipient must have an EPA-approved non-site-specific quality assurance plan in place before beginning field work. The recipient must submit the plan to EPA in adequate time (generally 45 days) for approval to be granted before beginning field work.

(iii) The quality assurance plan must comply with the requirements regarding split sampling described in section 104(e)(4)(B) of CERCLA, as amended.

§35.6060 Political subdivision-lead pre-remedial Cooperative Agreements.

(a) If the Award Official determines that a political subdivision's lead involvement in pre-remedial activities would be more efficient, economical and appropriate than that of a State, based on the number of sites to be addressed and the political subdivision's history of program involvement, a pre-remedial Cooperative Agreement may be awarded under this section.

(b) The political subdivision must comply with all of the requirements described in §35.6055 of this subpart.

(c) The Award Official may require a three-party Superfund State Contract for pre-remedial activities.

(d) If the preliminary assessment/site investigation (PA/SI) shows that listing the site on the NPL is necessary, the political subdivision must enter into a three-party Superfund State Contract before any remedial activities begin.

§35.6070 Indian Tribe-lead pre-remedial Cooperative Agreements.

The Indian Tribe must comply with all of the requirements described in §35.6055 of this subpart, except for the intergovernmental review requirements included in the ''Application for Federal Assistance'' (SF–424).

REMEDIAL RESPONSE COOPERATIVE AGREEMENTS

§35.6100 Eligibility for remedial Cooperative Agreements.

States, Indian Tribes, and political subdivisions may apply for remedial response Cooperative Agreements.

§35.6105 State-lead remedial Cooperative Agreements.

To receive a State-lead remedial Cooperative Agreement, the applicant must submit the following items to EPA:

(a) *Application form,* as described in §35.6055(a) of this subpart, accompanied by the following:

(1) *Budget sheets* (SF–424A) displaying costs by site, activity and operable unit, as applicable;

(2) *A Project narrative statement,* including the following:

(i) *A site description,* including a discussion of the location of each site, the physical characteristics of each site (site geology and proximity to drinking water supplies), the nature of the release (contaminant type and affected media), past response actions at each site, and response actions still required at each site;

(ii) *A site-specific Statement of Work (SOW),* including estimated costs per task, and a standard task to ensure that a sign is posted at the site providing the appropriate contacts for obtaining information on activities being conducted at the site, and for reporting suspected criminal activities;

(iii) *A statement designating a lead site project manager* among appropriate State offices. This statement must demonstrate that the lead State agency has conducted coordinated planning of response activities with other State agencies. The statement must identify

the name and position of those individuals who will be responsible for coordinating the State offices;

(iv) *A site-specific Community Relations Plan* or an assurance that field work will not begin until one is in place. The Regional community relations coordinator must approve the Community Relations Plan before the recipient begins field work. The recipient must comply with the community relations requirements described in EPA policy and guidance, and in the National Contingency Plan (NCP);

(v) *A site-specific health and safety plan,* or an assurance that the applicant will have a final plan before starting field work. Unless specifically waived by the award official, the applicant must have a site-specific health and safety plan in place providing for the protection of on-site personnel and area residents. The site-specific health and safety plan must comply with Occupational Safety and Health Administration (OSHA) 29 CFR 1910.120, entitled ''Hazardous Waste Operations and Emergency Response,'' unless the recipient is an Indian Tribe exempt from OSHA requirements;

(vi) *Quality assurance*—(A) *General.* If the project involves environmentally related measurements or data generation, the recipient must comply with the requirements regarding quality assurance described in 40 CFR 31.45.

(B) *Quality assurance plan.* The applicant must have a separate quality assurance project plan and/or sampling plan for each site to be covered by the Cooperative Agreement. The applicant must submit the quality assurance project plan and sampling plan, which incorporates results of any site investigation performed at that site, to EPA with its Cooperative Agreement application. However, at the option of the EPA award official with program concurrence, the applicant may submit with its application a schedule for developing the detailed site-specific quality assurance plan (generally 45 days before beginning field work). Field work may not begin until EPA approves the site-specific quality assurance plan.

(C) *Split sampling.* The quality assurance plan must comply with the requirements regarding split sampling described in section 104(e)(4)(B) of CERCLA, as amended.

(vii) *A schedule of deliverables* to be prepared during response activities.

(3) *Drug-Free Workplace Certification.* The applicant must certify (40 CFR part 32, subpart F) that it is in compliance with the Drug-Free Workplace Act of 1988 (Pub. L. 100–690, title V, subtitle D), which requires applicants to certify in writing that they will provide a drug-free workplace.

(4) *Certification Regarding Debarment, Suspension, and Other Responsibility Matters (EPA Form 5700–49).* The applicant must certify that it is in compliance with Executive Order 12549 and 40 CFR part 32.

(5) *Procurement Certification.* The applicant must evaluate its own procurement system to determine if the system meets the intent of the requirements of this subpart. After evaluating its procurement system, the applicant or recipient must complete the ''Procurement System Certification'' (EPA Form 5700–48) and submit the form to EPA with its application.

(6) *Anti-Lobbying Certification.* The applicant must certify (40 CFR part 34, appendix A) that no appropriated funds will be expended to pay any person for influencing or attempting to influence an officer or employee of any agency, a Member of Congress, an officer or employee of Congress, or an employee of a Member of Congress, in connection with any Federal award in excess of $100,000, in accordance with section 319 of Public Law 101–121. The applicant must follow the requirements in the Interim Final Rule entitled, ''New Restrictions on Lobbying'' published on February 26, 1990.

(b) *CERCLA Assurances.* Before a Cooperative Agreement for remedial action can be awarded, the State must provide EPA with written assurances as specified below.

(1) *Operation and maintenance.* The State must provide an assurance that it will assume responsibility for the operation and maintenance (O&M) of implemented CERCLA-funded remedial actions for the expected life of each such action. In addition, even if a political subdivision is designated as being responsible for O&M, the State must guarantee that it will assume any or

all O&M activities in the event of default by the political subdivision.

(2) *Cost sharing.* The State must provide assurances for cost sharing as follows:

(i) *Ten percent.* Where a facility was privately operated, whether privately or publicly owned, at the time of disposal, the State must provide 10 percent of the cost of the remedial action, if CERCLA-funded.

(ii) *Fifty percent.* Where a facility was publicly operated by a State or political subdivision at the time of disposal of hazardous substances at the facility, the State must provide at least 50 percent of the cost of removal, remedial planning, and remedial action if the remedial action is CERCLA-funded.

(3) *Twenty-year waste capacity.* The State must assure EPA of the availability of hazardous waste treatment or disposal facilities within and/or outside the State that comply with subtitle C of the Solid Waste Disposal Act and that have adequate capacity for the destruction, treatment, or secure disposition of all hazardous wastes that are reasonably expected to be generated within the State during the 20-year period following the date of the response agreement. A remedial response action cannot be funded unless this assurance is provided consistent with § 300.510 of the NCP. EPA will determine whether the State's assurance is adequate.

(4) *Off-site storage, treatment, or disposal.* If off-site storage, destruction, treatment, or disposal is required, the State must assure the availability of a hazardous waste disposal facility that is in compliance with subtitle C of the Solid Waste Disposal Act and is acceptable to EPA. The lead agency of the State must provide the notification required at § 35.6120, if applicable.

(5) *Real property acquisition.* If EPA determines in the remedy selection process that an interest in real property must be acquired in order to conduct a response action, such acquisition may be funded under a Cooperative Agreement. EPA may acquire an interest in real estate for the purpose of conducting a remedial action only if the State provides assurance that it will accept transfer of such interest in accordance with 40 CFR 300.510(f). The State must provide this assurance even if it intends to transfer this interest to a third party. (See § 35.6400 of this subpart for additional information on real property acquisition requirements.)

[55 FR 23007, June 5, 1990, as amended at 59 FR 35853, July 14, 1994]

§ 35.6110 Indian Tribe-lead remedial Cooperative Agreements.

(a) *Application requirements.* The Indian Tribe must comply with all of the requirements described in § 35.6105(a) and, if appropriate, § 35.6105(b)(5) of this subpart. Indian tribes are not required to comply with the intergovernmental review requirements included in the ''Application for Federal Assistance'' (SF–424). Consistent with the NCP (§ 300.510(e)(2)), this rule does not address whether Indian tribes are States for the purpose of CERCLA section 104(c)(9).

(b) *Cooperative Agreement requirements.* (1) The Indian tribe must comply with all terms and conditions in the Cooperative Agreement.

(2) If EPA determines as part of the remedy selection process that an interest in real property must be acquired in order to conduct the site-specific response action, the Indian tribe will be required, to the extent of its legal authority, to assure EPA that it will take title to, acquire interest in, or accept transfer of such interest in real property acquired with CERCLA funds, including any interest in property that is acquired to ensure the reliability of institutional controls restricting the use of that property. (See § 35.6400 of this subpart regarding information on property title and interest requirements.)

(3) If it is designated the lead for remedial action, the Indian Tribe must provide the notification required at § 35.6120, substituting the term ''Indian Tribe'' for the term ''State'' in that section, and ''out-of-jurisdiction'' for ''out-of-State.''

§ 35.6115 Political subdivision-lead remedial Cooperative Agreements.

(a) *General.* If both the State and EPA agree, a political subdivision with the necessary capabilities and jurisdictional authority may assume the lead responsibility for the remedial activity, or a portion thereof, at a site. The

State and political subdivision must enter into a three-party Superfund State Contract (SSC) with EPA before a political subdivision can enter into a Cooperative Agreement.

(b) *Three-party Superfund State Contract requirements.* The three-party SSC must specify the responsibilities of the signatories. By signing the SSC, the State and the political subdivision agree to follow the appropriate administrative requirements regarding SSCs described in §§35.6805, 35.6815, and 35.6820 of this subpart. Furthermore, EPA, the State, and the political subdivision agree that the SSC:

(1) Specifies the substantial and meaningful involvement of the State as required by section 121(f)(1) of CERCLA, as amended; and

(2) Includes the State's CERCLA section 104 assurances, if the political subdivision is designated the lead for remedial action.

(c) *Political subdivision Cooperative Agreement requirements.*—(1) *Application requirements.* To receive a remedial Cooperative Agreement, the political subdivision must prepare an application which includes the documentation described in §35.6105 (a)(1) through (a)(6).

(2) *Cooperative Agreement requirements.* The political subdivision must comply with all terms and conditions in the Cooperative Agreement. If it is designated the lead for remedial action, the political subdivision must provide the notification required at §35.6120, substituting the term ''political subdivision'' for the term ''State'' in that section.

§35.6120 Notification of the out-of-State or out-of-Indian Tribal jurisdiction transfer of CERCLA wastes.

(a) The recipient must provide written notification of off-site shipments of CERCLA waste from a site to an out-of-State or out-of-Indian Tribal jurisdiction waste management facility to:

(1) The appropriate State environmental official for the State in which the waste management facility is located; and/or

(2) The appropriate Indian Tribal official who has jurisdictional authority in the area where the waste management facility is located; and

(3) The EPA Award Official.

(b) The notification of off-site shipments does not apply when the total volume of all such shipments from the site does not exceed 10 cubic yards.

(c) The notification must be in writing and must provide the following information, where available:

(1) The name and location of the facility to which the CERCLA waste is to be shipped;

(2) The type and quantity of CERCLA waste to be shipped;

(3) The expected schedule for the shipments of the CERCLA waste; and

(4) The method of transportation of the CERCLA waste.

(d) The recipient must notify the State or Indian Tribal government in which the planned receiving facility is located of major changes in the shipment plan, such as a decision to ship the CERCLA waste to another facility within the same receiving State, or to a facility in another State.

(e) The recipient must provide relevant information on the off-site shipments, including the information in paragraph (c) above, as soon as possible after the award of the contract and, where practicable, before the CERCLA waste is actually shipped.

ENFORCEMENT COOPERATIVE AGREEMENTS

§35.6145 Eligibility for enforcement Cooperative Agreements.

Pursuant to CERCLA section 104(d), States, political subdivisions thereof, and Indian Tribes may apply for enforcement Cooperative Agreements. To be eligible for an enforcement Cooperative Agreement, the State, political subdivision or Indian Tribe must demonstrate that it has the authority, jurisdiction, and the necessary administrative capabilities to take an enforcement action(s) to compel PRP cleanup of the site, or recovery of the cleanup costs. To accomplish this, the State, political subdivision or Indian Tribe, respectively, must submit the following for EPA approval:

(a) A letter from the State Attorney General, or comparable local official (of a political subdivision) or comparable Indian Tribal official, certifying that it has the authority, jurisdiction, and administrative capabilities

that provide a basis for pursuing enforcement actions against a PRP to secure the necessary response;

(b) A copy of the applicable State, local (political subdivision) or Indian Tribal statute(s) and a description of how it is implemented;

(c) Any other documentation required by EPA to demonstrate that the State, local (political subdivision) or Indian Tribal government has the statutory authority, jurisdiction, and administrative capabilities to perform the enforcement activity(ies) to be funded under the Cooperative Agreement.

§35.6150 Activities eligible for funding under enforcement Cooperative Agreements.

An enforcement Cooperative Agreement application from a State, political subdivision or Indian Tribe may request funding for the following enforcement activities:

(a) PRP searches;

(b) Issuance of notice letters and negotiation activities;

(c) Administrative and judicial enforcement actions taken under State or Indian Tribal law;

(d) Management assistance and oversight of PRPs during Federal enforcement response;

(e) Oversight of PRPs during a State, political subdivision or Indian Tribe enforcement response contingent on the applicant having taken all necessary action to compel PRPs to fund the oversight of cleanup activities negotiated under the recipient's enforcement authorities. If the State, political subdivision, Indian Tribe or EPA cannot obtain PRP commitment to fund such oversight activities, then these activities will be considered eligible for CERCLA funding under an enforcement Cooperative Agreement.

§35.6155 State, political subdivision or Indian Tribe-lead enforcement Cooperative Agreements.

(a) The State, political subdivision or Indian Tribe must comply with the requirements described in §35.6105 (a)(1) through (a)(6) of this subpart, as appropriate.

(b) The CERCLA section 104 assurances described in §35.6105(b) are not applicable for enforcement Cooperative Agreements.

(c) Before an enforcement Cooperative Agreement is awarded, the State, political subdivision or Indian Tribe must:

(1) Assure EPA that it will notify and consult with EPA promptly if the recipient determines that its laws or other restrictions prevent the recipient from acting consistently with CERCLA; and

(2) If the applicant is seeking funds for oversight of PRP cleanup, the applicant must:

(i) Demonstrate that the proposed Statement of Work or cleanup plan prepared by the PRP satisfies the recipient's enforcement goals for those instances in which the recipient is seeking funding for oversight of PRP cleanup activities negotiated under the recipient's own enforcement authorities; and

(ii) Demonstrate that the PRP has the capability to attain the goals set forth in the plan;

(iii) Demonstrate that it has taken all necessary action to compel PRPs to fund the oversight of cleanup activities negotiated under the recipient's enforcement authorities.

REMOVAL RESPONSE COOPERATIVE AGREEMENTS

§35.6200 Eligibility for removal Cooperative Agreements.

When a planning period of more than six months is available, States, political subdivisions and Indian Tribes may apply for removal Cooperative Agreements.

§35.6205 Removal Cooperative Agreements.

(a) The State must comply with the requirements described in §35.6105(a) of this subpart. To the extent practicable, the State must comply with the notification requirement at §35.6120 when a removal action is necessary and involves out-of-State shipment of CERCLA wastes, and when, based on the site evaluation, EPA determines that a planning period of more than six months is available before the removal activities must begin.

(b) Pursuant to CERCLA section 104(c)(3), the State is not required to share in the cost of a CERCLA-funded removal action, unless the removal is conducted at a site that was publicly operated by a State or political subdivision at the time of disposal of hazardous substances and a CERCLA-funded remedial action is ultimately undertaken at the site. In this situation, the State must share at least 50 percent in the cost of all removal, remedial planning, and remedial action costs at the time of the remedial action as stated in § 35.6105(b)(2)(ii) of this subpart.

(c) If both the State and EPA agree, a political subdivision with the necessary capabilities and jurisdictional authority may assume the lead responsibility for all, or a portion, of the removal activity at a site. Political subdivisions must comply with the requirements described in § 35.6105(a) of this subpart. To the extent practicable, political subdivisions also must comply with the notification requirement at § 35.6120 when a removal action is necessary and involves the shipment of CERCLA wastes out of the State's jurisdiction, and when, based on the site evaluation, EPA determines that a planning period of more than six months is available before the removal activities must begin.

(d) The State must provide the cost share assurance discussed in § 35.6205(b) above on behalf of a political subdivision that is given the lead for a removal action.

(e) Indian Tribes must comply with the requirements described in § 35.6105(a) of this subpart. To the extent practicable, Indian Tribes also must comply with the notification requirement at §35.6120 when a removal action is necessary and involves the shipment of CERCLA wastes out of the Indian Tribe's jurisdiction, and when, based on the site evaluation, EPA determines that a planning period of more than six months is available before the removal activities must begin.

(f) Indian Tribes are not required to share in the cost of a CERCLA-funded removal action.

CORE PROGRAM COOPERATIVE AGREEMENTS

§ 35.6215 Eligibility for Core Program Cooperative Agreements.

(a) States and Indian Tribes may apply for Core Program Cooperative Agreements in order to conduct CERCLA implementation activities that are not directly assignable to specific sites, but are intended to support a State's or Indian Tribe's ability to participate in the CERCLA; response program.

(b) Only the State or Indian Tribal government agency designated as the single point of contact with EPA for CERCLA implementation is eligible to receive a Core Program Cooperative Agreement.

(c) When it is more economical for a government entity other than the recipient (such as a political subdivision or State Attorney General) to implement tasks funded through a Core Program Cooperative Agreement, benefits to such entities must be provided for in an intergovernmental agreement.

§ 35.6220 General.

The recipient of a Core Program Cooperative Agreement must comply with the requirements regarding financial administration (§§ 35.6270 through 35.6290 of this subpart), property (§§ 35.6300 through 35.6450), procurement (§§ 35.6550 through 35.6610), reporting (§§ 35.6650 through 35.6670), records (§§ 35.6700 through 35.6710), and other administrative requirements under a Cooperative Agreement (§§ 35.6750 through 35.6790) described in this subpart. Recipients may not incur site-specific costs. Where these sections entail site-specific requirements, the recipient is not required to comply on a site-specific basis.

§ 35.6225 Activities eligible for funding under Core Program Cooperative Agreements.

To be eligible for funding under a Core Program Cooperative Agreement, activities must support a recipient's abilities to implement CERCLA. Once the recipient has in place program functions described in § 35.6225 (a) through (d) below, EPA will evaluate

the recipient's program needs to sustain interaction with EPA in CERCLA implementation as described in § 35.6225(e). The amount of funding provided under the Core Program will be determined by EPA based on the availability of funds and the recipient's program needs in the areas described in (a) through (d) below:

(a) Procedures for emergency response actions and longer-term remediation of environmental and health risks at hazardous waste sites (including but not limited to the development of generic health and safety plans, quality assurance project plans, and community relation plans);

(b) Provisions for satisfying all requirements and assurances (including the development of a fund or other financing mechanism(s) to pay for studies and remediation activities);

(c) Legal authorities and enforcement support associated with proper administration of the recipient's program and with efforts to compel potentially responsible parties to conduct or pay for studies and/or remediation (including but not limited to the development of statutory authorities; access to legal assistance in identifying applicable or relevant and appropriate requirements of other laws; and development and maintenance of the administrative, financial and recordkeeping systems necessary for cost recovery actions under CERCLA);

(d) Efforts necessary to hire and train staff to manage publicly-funded cleanups, oversee responsible party-lead cleanups, and provide clerical support; and

(e) Other activities deemed necessary by EPA to support sustained EPA/recipient interaction in CERCLA implementation (including but not limited to general program management and supervision necessary for a recipient to implement CERCLA activities, and interagency coordination on all phases of CERCLA response).

Continued funding of tasks in subsequent years will be based on an evaluation of demonstrated progress towards the goals in the existing Core Program Cooperative Agreement Statement of Work.

§ 35.6230 Application requirements.

To receive a Core Program Cooperative Agreement, the applicant must submit an application form (''Application for Federal Assistance,'' SF–424, for non-construction programs) to EPA. Applications for additional funding need include only the revised pages. The application must include the following:

(a) *A project narrative statement,* including the following:

(1) *A Statement of Work (SOW)* which must include a detailed description of the CERCLA-funded activities and tasks to be conducted, the projected costs associated with each task, the number of products to be completed, and a schedule for implementation. Eligible activities under Core Program Cooperative Agreements are discussed in § 35.6225 of this subpart;

(2) *A background statement,* describing the current abilities and authorities of the recipient's program for implementing CERCLA, the program's needs to sustain and increase recipient involvement in CERCLA implementation, and the impact of Core Program Cooperative Agreement funds on the recipient's involvement in site-specific CERCLA response.

(b) *Budget sheets* (SF–424A);

(c) *Proposed project and budget periods* for CERCLA-funded activities. The project and budget periods may be one or more years and may be extended incrementally, up to 12 months at a time, with EPA approval;

(d) *Certifications* for a drug-free workplace; debarment, suspensions, and other responsibility matters; procurement; and lobbying, pursuant to § 35.6105(a) (3) through (6) of this subpart.

§ 35.6235 Cost sharing.

The recipient of a Core Program Cooperative Agreement must provide at least ten percent of the direct and indirect costs of all activities covered by the Core Program Cooperative Agreement. The recipient must provide its cost share with non-Federal funds or with Federal funds authorized by statute to be used for matching purposes. Funds used for matching purposes under any other Federal grant or Cooperative Agreement cannot be used for

matching purposes under a Core Program Cooperative Agreement. The recipient may provide its share using in-kind contributions if such contributions are provided for in the Cooperative Agreement. The recipient may not use CERCLA State credits to offset any part of the recipient's required match for Core Program Cooperative Agreements. See § 35.6285 (c), (d), and (f) regarding credit, over match, and advance match, respectively.

SUPPORT AGENCY COOPERATIVE AGREEMENTS

§ 35.6240 Eligibility for support agency Cooperative Agreements.

States, political subdivisions, and Indian Tribes may apply for support agency Cooperative Agreements to ensure their meaningful and substantial involvement in response activities, as specified in sections 104 and 121(f)(1) of CERCLA and the NCP. (See § 35.6800 (a) and (b).)

§ 35.6245 Allowable activities.

Support agency activities are those activities conducted by the recipient to ensure its meaningful and substantial involvement. The activities described in section 121(f)(1) of CERCLA, as amended, and in subpart F of the NCP, are eligible for funding under a support agency Cooperative Agreement.

§ 35.6250 Support agency Cooperative Agreement requirements.

(a) *Application requirements.* The applicant must comply with the requirements described in § 35.6105(a) (1), (4), (5) and (6), and other requirements as negotiated with EPA. (Indian Tribes are exempt from the requirement of Intergovernmental Review in part 29 of this chapter.) An applicant may submit a non-site-specific budget for support agency activities, with the exception of remedial action support agency activities, which require cost share and must be applied for within a site-specific budget. All support agency activities are subject to the applicable sections of this subpart.

(b) *Cooperative Agreement requirements.* The recipient must comply with the requirements regarding financial administration (§§ 35.6270 through 35.6290 of this subpart), property (§§ 35.6300 through 35.6450), procurement (§§ 35.6550 through 35.6610), reporting (§§ 35.6650 through 35.6670), records (§§ 35.6700 through 35.6710), and other administrative requirements under a Cooperative Agreement (§§ 35.6750 through 35.6790) described in this subpart.

§ 35.6255 Cost sharing.

The requirements for cost sharing under a support agency Cooperative Agreement are the same as the cost sharing requirements of § 35.6105(b)(2) of this subpart. The State may use in-kind services as part of its cost share. (See § 35.6815(b) for SSC payment requirements.)

FINANCIAL ADMINISTRATION REQUIREMENTS UNDER A COOPERATIVE AGREEMENT

§ 35.6270 Standards for financial management systems.

(a) *Accounting system standards.* (1) *General.* The recipient's system must track expenses by site, activity, and, operable unit, as applicable, according to object class. The system must also provide control, accountability, and an assurance that funds, property, and other assets are used only for their authorized purposes. The recipient must allow an EPA review of the adequacy of the financial management system as described in 40 CFR 31.20(c).

(2) *Allowable costs.* The recipient's systems must comply with the appropriate allowable cost principles described in 40 CFR 31.22.

(3) *Pre-remedial.* The system need not track expenses by site. However, all pre-remedial costs must be documented under a single Superfund account number designated specifically for the preremedial activity.

(4) *Core Program.* Since all costs associated with Core Program Cooperative Agreements are non-site-specific, the systems need not track expenses by site. However, all Core Program costs must be documented under the Superfund account number(s) designated specifically for Core Program activity.

(5) *Support Agency.* Unless otherwise specified in the Cooperative Agreement, all support agency costs, with the exception of remedial action support agency costs, may be documented under a single Superfund account number designated specifically for support agency activities. Remedial action support agency activities must be documented site-specifically.

(6) *Accounting system control procedures.* Except as provided for in paragraph (a)(3) of this section, accounting system control procedures must ensure that accounting information is:

(i) Accurate, charging only costs attributable to the site, activity, and operable unit, as applicable; and

(ii) Complete, recording and charging to individual sites, activities, and operable units, as applicable, all costs attributable to the recipient's CERCLA effort.

(7) *Financial reporting.* The recipient's accounting system must use actual costs as the basis for all reports of direct site charges. The recipient must comply with the requirements for financial reporting contained in § 35.6670 of this subpart.

(b) *Recordkeeping system standards.* (1) The recipient must maintain a recordkeeping system that enables site-specific costs to be tracked by site, activity, and operable unit, as applicable, and provides sufficient documentation for cost recovery purposes.

(2) The recipient must provide this site-specific documentation to the EPA Regional Office within 30 working days of a request, unless another time frame is specified in the Cooperative Agreement.

(3) In addition, the recipient must comply with the requirements regarding records described in §§ 35.6700, 35.6705, and 35.6710 of this subpart. The recipient must comply with the requirements regarding source documentation described in 40 CFR 31.20(b)(6).

(4) For pre-remedial and Core Program activities, the recordkeeping system must comply with the requirements described in paragraphs (a)(3) and (a)(4), respectively, of this section.

§ 35.6275 Period of availability of funds.

(a) The recipient must comply with the requirements regarding the availability of funds described in 40 CFR 31.23.

(b) Except as permitted in § 35.6285, the Award Official must sign the assistance agreement before costs are incurred. The recipient may incur costs between the date the Award Official signs the assistance agreement and the date the recipient signs the agreement, if the costs are identified in the agreement and the recipient does not change the agreement.

§ 35.6280 Payments.

(a) *General.* In addition to the following requirements, the recipient must comply with the requirements regarding payment described in 40 CFR 31.21(f) through (h).

(1) *Assignment of payment.* The recipient cannot assign the right to receive payments under the recipient's Cooperative Agreement. EPA will make payments only to the payee identified in the Cooperative Agreement.

(2) *Interest.* If the recipient earns interest on an advance of EPA funds, the recipient must return the interest unless the recipient is a State or State agency as defined under section 203 of the Intergovernmental Cooperation Act of 1968, or a Tribal organization as defined under section 102, 103, or 104 of the Indian Self-Determination and Education Assistance Act of 1975 (Pub. L. 93–638).

(b) *Payment method*—(1) *Letter of credit.* In order to receive payment by the letter of credit method, the recipient must comply with the requirements regarding letter of credit described in 40 CFR 31.20 (b)(7) and 31.21(b). The recipient must identify and charge costs to specific sites, activities, and operable units, as applicable, for drawdown purposes as specified in the Cooperative Agreement.

(2) *Reimbursement.* If the recipient is unable to meet letter of credit requirements, EPA will pay the recipient by reimbursement. The recipient must comply with the requirements regarding reimbursement described in 40 CFR 31.21(d).

(3) *Working capital advances.* If the recipient is unable to meet the criteria for payment by either letter of credit or reimbursement, EPA may provide cash on a working capital advance basis. Under this procedure EPA shall advance cash to the recipient to cover its estimated disbursement needs for an initial period generally geared to the recipient's disbursing cycle. Thereafter, EPA shall reimburse the recipient for its actual cash disbursements. In such cases, the recipient must comply with the requirements regarding working capital advances described in 40 CFR 31.21(e).

§ 35.6285 Recipient payment of response costs.

The recipient may pay for its share of response costs using cash, services, credits or any combination of these, as follows:

(a) *Cash.* The recipient may pay for its share of response costs in the form of cash.

(b) *Services.* The recipient may provide equipment and services to satisfy its cost share requirements under Cooperative Agreements. The recipient must comply with the requirements regarding in-kind and donated services described in 40 CFR 31.24.

(c) *Credit*— (1) *General credit requirements.* Credits are limited to State site-specific expenses that EPA determines to be reasonable, documented, direct, out-of-pocket expenditures of non-Federal funds for remedial action. Credits are established on a site-specific basis. Only a State may claim credit.

(i) The State may claim credit for response activity obligations or expenditures incurred by the State or political subdivision between January 1, 1978 and December 11, 1980.

(ii) The State may claim credit for remedial action expenditures incurred by the State after October 17, 1986.

(iii) The State may not claim credit for removal actions taken after December 11, 1980.

(2) *Credit submission requirements.* (i) *Expenditures incurred before a site is listed on the NPL.* Although EPA may require additional documentation, the State must submit the following before EPA will approve the use of the credit:

(A) Specific amounts claimed for credit, by site (estimated amounts are unacceptable), based on supporting cost documentation;

(B) Units of government (State agency, county, local) that incurred the costs, by site;

(C) Description of the specific function performed by each unit of government at each site;

(D) Certification (signed by the State's fiscal manager or the financial director for each unit of government) that credit costs have not been previously reimbursed by the Federal government or any other party, and have not been used for matching purposes under any other Federal program or grant; and

(E) Documentation, if requested by EPA, to ensure the actions undertaken at the site are cost eligible and consistent with CERCLA, as amended, and the NCP requirements. This requirement does not apply for costs incurred before December 11, 1980.

(ii) *Expenditures incurred after a site is listed on the NPL.* A State may receive credit for remedial action expenditures after October 17, 1986, only if the State entered into a Cooperative Agreement before incurring costs at the site.

(3) *Use of credit.* The State must first apply credit at the site at which it was earned. With the approval of EPA, the State may use excess credit earned at one site for its cost share at another site (See CERCLA section 104(c)(5)). Credits must be applied on a site-specific basis, and, therefore, may not be used to meet State cost-share requirements for Core Program Cooperative Agreements. EPA will not reimburse excess credit.

(4) *Credit verification.* Credits are subject to verification by audit and technical review of actions performed at sites.

(d) *Over match.* The recipient may not use contributions in excess of the required cost-share at one site to meet the cost-share obligation at another site or the Core Program cost-share obligation. Overmatch is not ''credit'' pursuant to § 35.6285(c)(3).

(e) *Cost sharing.* The recipient must comply with the requirements regarding cost sharing described in 40 CFR 31.24. Finally, the recipient cannot use

costs incurred under the Core Program to offset cost-share requirements at a site.

(f) *Advance match.* (1) A Cooperative Agreement for a site-specific response entered into after October 17, 1986 cannot authorize a State to contribute funds during remedial planning and then apply those contributions to the remedial action cost share (advance match).

(2) A State may seek reimbursement for costs incurred under Cooperative Agreements which authorize advance match.

(3) Reimbursements are subject to the availability of appropriated funds.

(4) If the State does not seek reimbursement, EPA will apply the advance match to off-set the State's required cost share for remedial action at the site. The State may not use advance match for credit at any other site, nor may the State receive reimbursement until the conclusion of CERCLA-funded remedial response activities. Also, the State may not use advance match for credit against cost-share obligations for Core Program Cooperative Agreements.

(5) Claims for advance match are subject to verification by audit.

[55 FR 23007, June 5, 1990, as amended at 55 FR 24343, June 15, 1990]

§35.6290 Program income.

The recipient must comply with the requirements regarding program income described in 40 CFR part 31.25.

PERSONAL PROPERTY REQUIREMENTS UNDER A COOPERATIVE AGREEMENT

§35.6300 General personal property acquisition and use requirements.

(a) *General.* (1) Property may be acquired only when authorized in the Cooperative Agreement.

(2) The recipient must acquire the property during the approved project period.

(3) The recipient must:

(i) Charge property costs by site, activity, and operable unit, as applicable;

(ii) Document the use of the property by site, activity, and. operable unit, as applicable; and

(iii) Solicit and follow EPA's instructions on the disposal of any property purchased with CERCLA funds as specified in §35.6340 and §35.6345 of this subpart.

(b) *Exception.* The recipient is not required to charge property costs by site under a pre-remedial or Core Program Cooperative Agreement.

§35.6305 Obtaining supplies.

To obtain supplies, the recipient must agree to comply with the requirements in §§35.6300, 35.6315(b), 35.6325 through 35.6340, and 35.6350 of this subpart. Supplies obtained with Core Program funds must be for non-site-specific purposes. All purchases of supplies under the Core Program must comply with the requirements in the above listed sections, except where these requirements are site-specific.

§35.6310 Obtaining equipment.

To obtain equipment, the recipient must agree to comply with the requirements in §35.6300 and §§35.6315 through 35.6350 of this subpart.

§35.6315 Alternative methods for obtaining property.

(a) *Purchase equipment with recipient funds.* The recipient may purchase equipment with the recipient's own funds and may charge EPA a fee for using equipment on a CERCLA-funded project. The fee must be based on a usage rate, subject to the usage rate requirements in §35.6320 of this subpart.

(b) *Borrow federally owned property.* The recipient may borrow federally owned property, with the exception of motor vehicles, for use on CERCLA-funded projects. The loan of the federally owned property may only extend through the project period. At the end of the project period, or when the federally owned property is no longer needed for the project, the recipient must return the property to the Federal Government.

(c) *Lease, use contractor services, or purchase with CERCLA funds.* To acquire equipment through lease, use of contractor services, or purchase with CERCLA funds, the recipient must conduct and document a cost comparison analysis to determine which of these methods of obtaining equipment is the most cost effective. In order to obtain

the equipment, the recipient must submit documentation of the cost comparison analysis to EPA for approval. The recipient must obtain the equipment through the most cost effective method, subject to the requirements listed below:

(1) *Lease or rent equipment.* If it is the most cost effective method of acquisition, the recipient may lease or rent equipment, subject only to the requirements in § 35.6300 of this subpart.

(2) *Use contractor services.* (i) If it is the most cost effective method of acquisition, the recipient may hire the services of a contractor.

(ii) The recipient must obtain award official approval before authorizing the contractor to purchase equipment with CERCLA funds. (See § 35.6325 of this subpart regarding the title and vested interest of equipment purchased with CERCLA funds.) This does not apply for recipients who have used the sealed bids method of procurement.

(iii) The recipient must require the contractor to allocate the cost of the contractor services by site, activity, and operable unit, as applicable.

(3) *Purchase equipment with CERCLA funds.* If equipment purchase is the most cost-effective method of obtaining the equipment, the recipient may purchase the equipment with CERCLA funds. To purchase equipment with CERCLA funds, the recipient must comply with the following requirements:

(i) The recipient must include in the Cooperative Agreement application a list of all items of equipment to be purchased with CERCLA funds, with the price of each item.

(ii) If the equipment is to be used on sites, the recipient must allocate the cost of the equipment by site, activity, and operable unit, as applicable, by applying a usage rate subject to the usage rate requirements in § 35.6320 of this subpart.

(iii) The recipient may not use CERCLA funds to purchase a transportable or mobile treatment system.

(iv) Equipment obtained with Core Program funds must be for non-site-specific purposes. All purchases of equipment must comply with the requirements in § 35.6300, and §§ 35.6310 through 35.6350 of this subpart, except where these requirements are site-specific.

§ 35.6320 Usage rate.

(a) *Usage rate approval.* To charge EPA a fee for use of equipment purchased with recipient funds or to allocate the cost of equipment by site, activity, and operable unit, as applicable, the recipient must apply a usage rate. The recipient must submit documentation of the usage rate computation to EPA. The EPA-approved usage rate must be included in the Cooperative Agreement before the recipient incurs these equipment costs.

(b) *Usage rate application.* The recipient must record the use of the equipment by site, activity, and operable unit, as applicable, and must apply the usage rate to calculate equipment charges by site, activity, and operable unit, as applicable. For Core Program and pre-remedial activities, the recipient is not required to apply a usage rate.

§ 35.6325 Title and EPA interest in CERCLA-funded property.

(a) *EPA's interest in CERCLA-funded property.* EPA has an interest (the percentage of EPA's participation in the total award) in both equipment and supplies purchased with CERCLA funds.

(b) *Title in CERCLA-funded property.* Title in both equipment and supplies purchased with CERCLA funds vests in the recipient.

(1) *Right to transfer title.* EPA retains the right to transfer title of all property purchased with CERCLA funds to the Federal Government or a third party within 120 calendar days after project completion or at the time of disposal.

(2) *Equipment used as all or part of the remedy.* The following requirements apply to equipment used as all or part of the remedy:

(i) *Fixed in-place equipment.* EPA no longer has an interest in fixed in-place equipment once the equipment is installed.

(ii) *Equipment that is an integral part of services to individuals.* EPA no longer has an interest in equipment that is an integral part of services to individuals, such as pipes, lines, or pumps providing

hookups for homeowners on an existing water distribution system, once EPA certifies that the remedy is operational and functional.

§35.6330 Title to federally owned property.

Title to all federally owned property vests in the Federal Government.

§35.6335 Property management standards.

The recipient must comply with the following property management standards for property purchased with CERCLA funds. The recipient may use its own property management system if it meets the following standards.

(a) *Control.* The recipient must maintain:

(1) *Property records* for CERCLA-funded property which include the contents specified in §35.6700(c) of this subpart;

(2) *A control system* which ensures adequate safeguards for prevention of loss, damage, or theft of the property. The recipient must make provisions for the thorough investigation and documentation of any loss, damage, or theft;

(3) *Procedures* to ensure maintenance of the property in good condition and periodic calibration of the instruments used for precision measurements;

(4) *Sales procedures* to ensure the highest possible return, if the recipient is authorized to sell the property;

(5) *Provisions for financial control and accounting* in the financial management system of all equipment; and

(6) *Identification* of all federally owned property.

(b) *Inventory and reporting for CERCLA-funded equipment.*

(1) *Physical inventory.* The recipient must conduct a physical inventory at least once every two years for all equipment except that which is part of the in-place remedy. The recipient must reconcile physical inventory results with the equipment records.

(2) *Inventory reports.* The recipient must comply with requirements for inventory reports set forth in §35.6660 of this subpart.

(c) *Inventory and reporting for federally owned property.*

(1) *Physical inventory.* The recipient must conduct a physical inventory:

(i) Annually;

(ii) When the property is no longer needed; and

(iii) Within 90 days after the end of the project period.

(2) *Inventory reports.* The recipient must comply with requirements for inventory reports in §35.6660 of this subpart.

§35.6340 Disposal of CERCLA-funded property.

(a) *Equipment.* For equipment which is no longer needed, or at the end of the project period, whichever is earlier, the recipient must:

(1) Analyze two alternatives: the cost of leaving the equipment in place, and the cost of removing the equipment and disposing of it in another manner;

(2) Document the analysis of the two alternatives in the inventory report. See §35.6660 of this subpart regarding requirements for the inventory report.

(i) If it is most cost-effective to remove the equipment and dispose of it in another manner:

(A) If the equipment has a residual fair market value of $5,000 or more, the recipient must request disposition instructions from EPA in the inventory report. See §35.6345 of this subpart for equipment disposal options.

(B) If the equipment has a residual fair market value of less than $5,000, the recipient may retain the equipment for the recipient's use on another CERCLA site. If, however, there is any remaining residual value at the time of final disposition, the recipient must reimburse the Hazardous Substance Superfund for EPA's vested interest in the current fair market value of the equipment at the time of disposition.

(ii) If it is most cost-effective to leave the equipment in place, recommend in the inventory report that the equipment be left in place.

(3) Submit the inventory report to EPA, even if EPA has stopped supporting the project.

(b) *Supplies.* (1) If supplies have an aggregate fair market value of $5,000 or more at the end of the project period, the recipient must take one of the following actions at the direction of EPA:

(i) Use the supplies on another CERCLA project and reimburse the

original project for the fair market value of the supplies;

(ii) If both the recipient and EPA concur, keep the supplies and reimburse the Hazardous Substance Superfund for EPA's interest in the current fair market value of the supplies; or

(iii) Sell the supplies and reimburse the Hazardous Substance Superfund for EPA's interest in the current fair market value of the supplies, less any reasonable selling expenses.

(2) If the supplies remaining at the end of the project period have an aggregate fair market value of less than $5,000, the recipient may keep the supplies to use on another CERCLA project. If the recipient cannot use the supplies on another CERCLA project, then the recipient may keep or sell the supplies without reimbursing the Hazardous Substance Superfund.

§ 35.6345 Equipment disposal options.

The following disposal options are available:

(a) Use the equipment on another CERCLA project and reimburse the original project for the fair market value of the equipment;

(b) If both the recipient and EPA concur, keep the equipment and reimburse the Hazardous Substance Superfund, for EPA's interest in the current fair market value of the equipment;

(c) Sell the equipment and reimburse the Hazardous Substance Superfund for EPA's interest in the current fair market value of the equipment, less any reasonable selling expenses; or

(d) Return the equipment to EPA and, if applicable, EPA will reimburse the recipient for the recipient's proportionate share in the current fair market value of the equipment.

§ 35.6350 Disposal of federally owned property.

When federally owned property is no longer needed, or at the end of the project, the recipient must inform EPA that the property is available for return to the Federal Government. EPA will send disposition instructions to the recipient.

REAL PROPERTY REQUIREMENTS UNDER A COOPERATIVE AGREEMENT

§ 35.6400 Acquisition and transfer of interest.

(a) An interest in real property may be acquired only with prior approval of EPA.

(1) If the recipient acquires real property in order to conduct the response, the recipient with jurisdiction over the property must agree to hold the necessary property interest.

(2) If it is necessary for the Federal Government to acquire the interest in real estate to permit conduct of a remedial action, the acquisition may be made only if the State, or Indian Tribe to the extent of its legal authority, provides assurance that it will accept transfer of the acquired interest in accordance with 40 CFR 300.510(f). States and Indian Tribes must follow the requirements in §§35.6105(b)(5) and 35.6110(b)(2) respectively, of this subpart.

(b) The recipient must comply with applicable Federal regulations for real property acquisition under assistance agreements contained in part 4 of this chapter, ''Uniform Relocation Assistance and Real Property Acquisition for Federal and Federally-Assisted Programs.''

[55 FR 23007, June 5, 1990, as amended at 59 FR 35854, July 14, 1994]

§ 35.6405 Use.

The recipient must comply with the requirements regarding real property described in 40 CFR 31.31.

COPYRIGHT REQUIREMENTS UNDER A COOPERATIVE AGREEMENT

§ 35.6450 General requirements.

The recipient must comply with the requirements regarding copyrights described in 40 CFR 31.34. The recipient must comply with the requirements regarding contract copyright provisions described in §35.6595(b)(3) of this subpart.

USE OF RECIPIENT EMPLOYEES (''FORCE ACCOUNT'') UNDER A COOPERATIVE AGREEMENT

§ 35.6500 General requirements.

(a) Force Account work is the use of the recipient's own employees or equipment for construction, construction-related activities (including architecture and engineering services), or repair or improvement to a facility. When using Force Account work, the recipient must demonstrate that the employees can complete the work as competently as, and more economically than, contractors, or that an emergency necessitates the use of the Force Account.

(b) Where the value of Force Account services exceeds $25,000, the recipient must receive written authorization for use from the award official.

PROCUREMENT REQUIREMENTS UNDER A COOPERATIVE AGREEMENT

§ 35.6550 Procurement system standards.

(a) *Recipient standards*—(1) *Procurement system evaluation.* (i) An applicant or recipient must evaluate its own procurement system to determine if the system meets the intent of the requirements of this subpart. After evaluating its procurement system, the applicant or recipient must complete the ''Procurement System Certification'' (EPA Form 5700–48) and submit the form to EPA with its application.

(ii) The certification will be valid for two years or for the length of the project period specified in the Cooperative Agreement, whichever is greater, unless the recipient substantially revises its procurement system or the award official determines that the recipient is not following the intent of the requirements in this part. (See subparagraph (a)(4) of this section regarding EPA right to review.) If the recipient substantially revises its procurement system, the recipient must reevaluate its system and submit a revised EPA Form 5700–48.

(2) *Certified procurement system.* Even if the applicant or recipient has certified that its procurement system meets the intent of the requirements of this subpart, the EPA award official retains the authority as stated in:

(i) Section 35.6565(d)(1)(iii), ''Noncompetitive proposals,'' regarding award official authorization of noncompetitive proposals;

(ii) Section 35.6565(b), ''Sealed bids (formal advertising),'' regarding award official approval for the use of a procurement method other than sealed bidding for a remedial action award contract, except for Architectural/Engineering services and post-removal site control;

(iii) Section 35.6550(a)(9), ''Protests,'' regarding EPA review of protests; and

(iv) 40 CFR 31.36(g)(2)(iv), ''Awarding Agency Review,'' regarding the review of proposed awards over $25,000 which are to be awarded to other than the apparent low bidder under a sealed bid procurement.

(3) *Noncertified procurement system.* If the applicant or recipient has not certified that its procurement system meets the intent of the requirements of this subpart, then the recipient must follow the requirements of this subpart and allow EPA preaward review of proposed procurement actions that will use EPA funds. In addition, the recipient's contractors and subcontractors must submit their cost or price data on EPA Form 5700–41, ''Cost or Price Summary Format for Subagreements Under U.S. EPA Grants,'' or in another format which provides information similar to that required by EPA Form 5700–41. This specific requirement is an addition to the requirements regarding cost and price analysis described in § 35.6585 of this subpart.

(4) *EPA review.* EPA reserves the right to review any recipient's procurement system or procurement action under a Cooperative Agreement.

(5) *Code of conduct.* The recipient must comply with the requirements of 40 CFR 31.36(b)(3), which describes standards of conduct for employees, officers, and agents of the recipient.

(6) *Completion of contractual and administrative issues.* (i) The recipient is responsible for the settlement and satisfactory completion in accordance with sound business judgement and good administrative practice of all contractual and administrative issues arising out of procurements under the Cooperative Agreement.

(ii) EPA will not substitute its judgement for that of the recipient unless the matter is primarily a Federal concern.

(iii) Violations of law will be referred to the local, State, Tribal, or Federal authority having proper jurisdiction.

(7) *Selection procedures.* The recipient must have written selection procedures for procurement transactions.

(i) EPA may not participate in a recipient's selection panel except to provide technical assistance. EPA staff providing such technical assistance:

(A) Shall constitute a minority of the selection panel (limited to making recommendations on qualified offers and acceptable proposals based on published evaluation criteria) for the contractor selection process; and

(B) Are not permitted to participate in the negotiation and award of contracts.

(ii) When selecting a contractor, recipients:

(A) May not use EPA contractors to provide any support related to procuring a State contractor.

(B) May use the Corps of Engineers for review of State bidding documents, requests for proposals and bids and proposals received.

(8) *Award.* The recipient may award a contract only to a responsible contractor, as described in 40 CFR 31.36(b)(8), and must ensure that each contractor performs in accordance with all the provisions of the contract. (See also 35.6560 of this subpart regarding debarred and suspended contracts.)

(9) *Protest procedures.* The recipient must comply with the requirements described in 40 CFR 31.36(b)(12) regarding protest procedures.

(10) *Reporting.* The recipient must comply with the requirements for procurement reporting contained in § 35.6665 of this subpart.

(11) *Intergovernmental agreements.* (i) To foster greater economy and efficiency, recipients are encouraged to enter into intergovernmental agreements for procurement or use of common goods and services.

(ii) Although intergovernmental agreements are not subject to the requirements set forth at §§ 35.6550 through 35.6610, all procurements under intergovernmental agreements are subject to these requirements except for procurements that are:

(A) Incidental to the purpose of the assistance agreement; and

(B) Made through a central public procurement unit.

(12) *Value engineering.* The recipient is encouraged to include value engineering clauses in contracts for construction projects of sufficient size to offer reasonable opportunities for cost reductions.

(b) *Contractor standards*—(1) *Disclosure requirements regarding Potentially Responsible Party relationships.* The recipient must require each prospective contractor to provide with its bid or proposal:

(i) Information on its financial and business relationship with all PRPs at the site and with the contractor's parent companies, subsidiaries, affiliates, subcontractors, or current clients at the site. Prospective contractors under a Core Program Cooperative Agreement must provide comparable information for all sites within the recipient's jurisdiction. (This disclosure requirement encompasses past financial and business relationships, including services related to any proposed or pending litigation, with such parties);

(ii) Certification that, to the best of its knowledge and belief, it has disclosed such information or no such information exists; and

(iii) A statement that it shall disclose immediately any such information discovered after submission of its bid or proposal or after award. The recipient shall evaluate such information and if a member of the contract team has a conflict of interest which prevents the team from serving the best interests of the recipient, the prospective contractor may be declared nonresponsible and the contract awarded to the next eligible bidder or offeror.

(2) *Conflict of interest*—(i) *Conflict of interest notification.* The recipient must require the contractor to notify the recipient of any actual, apparent, or potential conflict of interest regarding any individual working on a contract assignment or having access to information regarding the contract. This notification shall include both organizational conflicts of interest and personal conflicts of interest. If a personal

conflict of interest exists, the individual who is affected shall be disqualified from taking part in any way in the performance of the assigned work that created the conflict of interest situation.

(ii) *Contract provisions.* The recipient must incorporate the following provisions or their equivalents into all contracts, except those for well-drilling, fence erecting, plumbing, utility hookups, security guard services, or electrical services:

(A) *Contractor data.* The contractor shall not provide data generated or otherwise obtained in the performance of contractor responsibilities under a contract to any party other than the recipient, EPA, or its authorized agents for the life of the contract, and for a period of five years after completion of the contract.

(B) *Employment.* The contractor shall not accept employment from any party other than the recipient or Federal agencies for work directly related to the site(s) covered under the contract for five years after the contract has terminated. The recipient agency may exempt the contractor from this requirement through a written release. This release must include EPA concurrence.

(3) *Certification of independent price determination.* The recipient must require that each contractor include in its bid or proposal a certification of independent price determination. This document certifies that no collusion, as defined by Federal and State antitrust laws, occurred during bid preparation.

(4) *Recipient's Contractors.* The recipient must require its contractor to comply with the requirements in §§ 35.6270(a) (1) and (2); 35.6320 (a) and (b); 35.6335; 35.6700; and 35.6705. For additional contractor requirements, see also §§ 35.6710(c); 35.6590(c); and 35.6610.

§ 35.6555 Competition.

The recipient must conduct all procurement transactions in a manner providing maximum full and open competition.

(a) *Restrictions on competition.* Inappropriate restrictions on competition include the following:

(1) Placing unreasonable requirements on firms in order for them to qualify to do business;

(2) Requiring unnecessary experience and excessive bonding requirements;

(3) Noncompetitive pricing practices between firms or between affiliated companies;

(4) Noncompetitive awards to consultants that are on retainer contracts;

(5) Organizational conflicts of interest;

(6) Specifying only a ''brand name'' product, instead of allowing ''an equal'' product to be offered and describing the performance of other relevant requirements of the procurement; and

(7) Any arbitrary action in the procurement process.

(b) *Geographic and Indian Tribe preferences*—(1) *Geographic.* When conducting a procurement, the recipient must prohibit the use of statutorily or administratively imposed in-State or local geographical preferences in evaluating bids or proposals. However, nothing in this section preempts State licensing laws. In addition, when contracting for architectural and engineering (A/E) services, the recipient may use geographic location as a selection criterion, provided that when geographic location is used, its application leaves an appropriate number of qualified firms, given the nature and size of the project, to compete for the contract.

(2) *Indian Tribe.* If the project benefits Indians, the recipient must comply with the Indian Self-Determination and Education Assistance Act of 1975 (Pub. L. 93–638).

(c) *Written specifications.* The recipient's written specifications must include a clear and accurate description of the technical requirements and the qualitative nature of the material, product or service to be procured.

(1) This description must not contain features which unduly restrict competition, unless the features are necessary to:

(i) Test or demonstrate a specific thing;

(ii) Provide for necessary interchangeability of parts and equipment; or

(iii) Promote innovative technologies.

(2) The recipient must avoid the use of detailed product specifications if at all possible.

(d) *Public notice.* When soliciting bids or proposals, the recipient must allow sufficient time (generally 30 calendar days) between public notice of the proposed project and the deadline for receipt of bids or proposals. The recipient must publish the public notice in professional journals, newspapers, or publications of general circulation over a reasonable area.

(e) *Prequalified lists.* Recipients may use prequalified lists of persons, firms, or products to acquire goods and services. The list must be current and include enough qualified sources to ensure maximum open and free competition. Recipients must not preclude potential bidders from qualifying during the solicitation period.

§ 35.6560 Master list of debarred, suspended, and voluntarily excluded persons.

While evaluating bids or proposals, the recipient must consult the most current ''List of Parties Excluded from Federal Procurement or Non-procurement Programs'' to ensure that the firms submitting proposals are not prohibited from participation in assistance programs. The recipient must comply with the requirements regarding subawards to debarred and suspended parties described in 40 CFR 31.35.

§ 35.6565 Procurement methods.

The recipient must comply with the requirements for payment to consultants described in 40 CFR 31.36(j). In addition, the recipient must comply with the following requirements:

(a) *Small purchase procedures.* Small purchase procedures are those relatively simple and informal procurement methods for securing services, supplies, or other property that do not cost more than $25,000 in the aggregate. If small purchase procurements are used, the recipient must obtain and document price or rate quotations from an adequate number of qualified sources.

(b) *Sealed bids (formal advertising).* (For a remedial action award contract, except for Architectural/Engineering services and post-removal site control, the recipient must obtain the award official's approval to use a procurement method other than the sealed bid method.) Bids are publicly solicited and a fixed-price contract (lump sum or unit price) is awarded to the responsible bidder whose bid, conforming with all the material terms and conditions of the invitation for bids, is the lowest in price.

(1) In order for the recipient to use the sealed bid method, the following conditions must be met:

(i) A complete, adequate, and realistic specification or purchase description is available;

(ii) Two or more responsible bidders are willing and able to compete effectively for the business; and

(iii) The procurement lends itself to a fixed-price contract and the selection of the successful bidder can be made principally on the basis of price.

(2) If the recipient uses the sealed bid method, the recipient must comply with the following requirements:

(i) Publicly advertise the invitation for bids and solicit bids from an adequate number of known suppliers, providing them sufficient time prior to the date set for opening the bids;

(ii) The invitation for bids, which must include any specifications and pertinent attachments, must define the items or services in order for the bidder to properly respond;

(iii) Publicly open all bids at the time and place prescribed in the invitation for bids;

(iv) Award the fixed-price contract in writing to the lowest responsive and responsible bidder. Where specified in bidding documents, the recipient shall consider factors such as discounts, transportation cost, and life cycle costs in determining which bid is lowest. The recipient may only use payment discounts to determine the low bid when prior experience indicates that such discounts are usually taken advantage of; and

(v) If there is a sound documented reason, the recipient may reject any or all bids.

(c) *Competitive proposals.* The technique of competitive proposals is normally conducted with more than one source submitting an offer, and either

a fixed-price or cost-reimbursement type contract is awarded. It is generally used when conditions are not appropriate for the use of sealed bids. If the recipient uses the competitive proposal method, the following requirements apply:

(1) Recipients must publicize requests for proposals and all evaluation factors and must identify their relative importance. The recipient must honor any response to publicized requests for proposals to the maximum extent practical;

(2) Recipients must solicit proposals from an adequate number of qualified sources;

(3) Recipients must have a method for conducting technical evaluations of the proposals received and for selecting awardees;

(4) Recipients must award the contract to the responsible firm whose proposal is most advantageous to the program, with price and other factors considered; and

(5) Recipients may use competitive proposal procedures for qualifications-based procurement of architectural/engineering (A/E) professional services whereby competitor's qualifications are evaluated and the most qualified competitor. is selected, subject to negotiation of fair and reasonable compensation. This method, where price is not used as a selection factor, may only be used in the procurement of A/E professional services. The recipient may not use this method to purchase other types of services even though A/E firms are a potential source to perform the proposed effort.

(d) *Noncompetitive proposals.* (1) The recipient may procure by noncompetitive proposals only when the award of a contract is infeasible under small purchase procedures, sealed bids or competitive proposals, and one of the following circumstances applies:

(i) The item is available only from a single source;

(ii) The public exigency or emergency for the requirement will not permit a delay resulting from competitive solicitation (a declaration of an emergency under State law does not necessarily constitute an emergency under the EPA Superfund program's criteria);

(iii) The award official authorized noncompetitive proposals; or

(iv) After solicitation of a number of sources, competition is determined to be inadequate.

(2) When using noncompetitive procurement, the recipient must conduct a cost analysis in accordance with the requirements described in § 35.6585 of this subpart.

§ 35.6570 Use of the same engineer during subsequent phases of response.

(a) If the public notice clearly stated the possibility that the firm or individual selected could be awarded a contract for follow-on services and initial procurement complied with the procurement requirements of this subpart, the recipient of a CERCLA remedial response Cooperative Agreement may use the engineer procured to conduct any or all of the follow-on engineering activities without going through the public notice and evaluation procedures.

(b) The recipient may also use the same engineer during subsequent phases of the project in the following cases:

(1) Where the recipient conducted the RI, FS, or design activities without EPA assistance but is using CERCLA funds for follow-on activities, the recipient may use the engineer for subsequent work provided the recipient certifies:

(i) That it complied with the procurement requirements in § 35.6565 of this subpart when it selected the engineer and the code of conduct requirements described in 40 CFR 31.36(b)(3).

(ii) That any CERCLA-funded contract between the engineer and the recipient meets all of the other provisions as described in the procurement requirements in this subpart.

(2) Where EPA conducted the RI, FS, or design activities but the recipient will assume the responsibility for subsequent phases of response under a Cooperative Agreement, the recipient may use, with the award official's approval, EPA's engineer contractor without further public notice or evaluation provided the recipient follows the rest of the procurement requirements of this subpart to award the contract.

§ 35.6575 Restrictions on types of contracts.

(a) *Prohibited contracts.* The recipient's procurement system must not allow cost-plus-percentage-of-cost (e.g., a multiplier which includes profit) or percentage-of-construction-cost types of contracts.

(b) *Removal.* Under a removal Cooperative Agreement, the recipient must award a fixed price contract (lump sum, unit price, or a combination of the two) when procuring contractor support, regardless of the procurement method selected, unless the recipient obtains the award official's prior written approval.

(c) *Time and material contracts.* The recipient may use time and material contracts only if no other type of contract is suitable, and if the contract includes a ceiling price that the contractor exceeds at its own risk.

§ 35.6580 Contracting with minority and women's business enterprises (MBE/WBE), small businesses, and labor surplus area firms.

(a) *Procedures.* The recipient must comply with the six steps described in 40 CFR 31.36(e)(2) to ensure that MBEs, WBEs, and small businesses are used whenever possible as sources of supplies, construction, and services. Tasks to encourage small, minority, and women's business utilization in the Superfund program are eligible for funding under Core Program Cooperative Agreements.

(b) *Labor surplus firms.* EPA encourages recipients to procure supplies and services from labor surplus area firms.

(c) *''Fair share'' objectives.* It is EPA's policy that recipients award a fair share of contracts to small, minority and women's businesses. The policy requires that fair share objectives for minority and women-owned business enterprises be negotiated with the States and/or recipients, but does not require fair share objectives be established for small businesses.

(1) Each recipient must establish an annual ''fair share'' objective for MBE and WBE use. A recipient is not required to attain a particular statistical level of participation by race, ethnicity, or gender of the contractor's owners or managers.

(2) If the recipient is awarded more than one Cooperative Agreement during the year, the recipient may negotiate an annual fair share for all Cooperative Agreements for that year. It is not necessary to have a fair share for each Cooperative Agreement. When a Cooperative Agreement is awarded to a recipient with which a ''fair share'' agreement has not been negotiated, the recipient must not award any contracts under the Cooperative Agreement until the recipient has negotiated a fair share objective with EPA.

§ 35.6585 Cost and price analysis.

(a) *General.* The recipient must conduct and document a cost or price analysis in connection with every procurement action including contract modification.

(1) *Cost analysis.* The recipient must conduct and document a cost analysis for all negotiated contracts over $25,000 and for all change orders regardless of price. A cost analysis is not required when adequate price competition exists and the recipient can establish price reasonableness. The recipient must base its determination of price reasonableness on a catalog or market price of a commercial product sold in substantial quantities to the general public, or on prices set by law or regulation.

(2) *Price analysis.* In all instances other than those described in (a)(1) of this section, the recipient must perform a price analysis to determine the reasonableness of the proposed contract price.

(b) *Profit analysis.* For each contract in which there is no price competition and in all cases in which cost analysis is performed, the recipient must negotiate profit as a separate element of the price. To establish a fair and reasonable profit, consideration will be given to the complexity of the work to be performed, the risk borne by the contractor, the contractor's investment, the amount of subcontracting, the quality of its record of past performance, and industry profit rates in the surrounding geographical area for similar work.

§ 35.6590 Bonding and insurance.

(a) *General.* The recipient must meet the requirements regarding bonding described in 40 CFR 31.36(h). The recipient must clearly and accurately state in the contract documents the bonds and insurance requirements, including the amounts of security coverage that a bidder or offeror must provide.

(b) *Indemnification.* When adequate pollution liability insurance is not available to the contractor, EPA may indemnify response contractors for liability related to damage from releases arising out of the contractor's negligent performance. The recipient must comply with the requirements regarding indemnification described in section 119 of CERCLA.

(c) *Accidents and catastrophic loss.* The recipient must require the contractor to provide insurance against accidents and catastrophic loss to manage any risk inherent in completing the project.

§ 35.6595 Contract provisions.

(a) *General.* Each contract must be a sound and complete agreement, and include the following provisions:

(1) Nature, scope, and extent of work to be performed;

(2) Time frame for performance;

(3) Total cost of the contract; and

(4) Payment provisions.

(b) *Other contract provisions.* Recipients' contracts must include the following provisions:

(1) *Energy efficiency.* A contract must comply with mandatory standards and policies on energy efficiency contained in the State's energy conservation plan which is issued in compliance with the Energy Policy and Conservation Act (Pub. L. 94–163).

(2) *Violating facilities.* Contracts in excess of $100,000 must contain a provision which requires contractor compliance with all applicable standards, orders or requirements issued under section 306 of the Clean Air Act (42 U.S.C. 1857(h)), section 508 of the Clean Water Act (33 U.S.C. 1368), Executive Order 11738, and EPA regulations (40 CFR part 15) which prohibit the use of facilities included on the EPA List of Violating Facilities under nonexempt Federal contracts, grants or loans.

(3) *Patents, inventions, and copyrights.* All contracts must include notice of EPA requirements and regulations pertaining to reporting and patent rights under any contract involving research, developmental, experimental or demonstration work with respect to any discovery or invention which arises or is developed while conducting work under a contract. This notice shall also include EPA requirements and regulations pertaining to copyrights and rights to data contained in 40 CFR 31.34.

(4) *Labor standards.* The recipient must include a copy of EPA Form 5720–4 (''Labor Standards Provisions for Federally Assisted Construction Contracts'') in each contract for construction (as defined by the Secretary of Labor in 29 CFR part 5). The form contains the Davis-Bacon Act requirements (40 U.S.C. 276a–276a–7), the Copeland Regulations (29 CFR part 3), the Contract Work Hours and Safety Standards Act Overtime Compensation (940 U.S.C. 327–333), and the nondiscrimination provisions in Executive Order 11246, as amended.

(5) *Conflict of interest.* The recipient must include provisions pertaining to conflict of interest as described in § 35.6550(b)(2)(ii) of this subpart.

(c) *Model clauses.* The recipient must comply with the requirements regarding model contract clauses described in 40 CFR 33.1030 (1987).

§ 35.6600 Contractor claims.

(a) *General.* The recipient must conduct an administrative and technical review of each claim before EPA will consider funding these costs.

(b) *Claims settlement.* The recipient may incur costs (including legal, technical and administrative) to assess the merits of or to negotiate the settlement of a claim by or against the recipient under a contract, provided:

(1) The claim arises from work within the scope of the Cooperative Agreement;

(2) A formal Cooperative Agreement amendment is executed specifically covering the costs before they are incurred;

(3) The costs are not incurred to prepare documentation that should be prepared by the contractor to support a claim against the recipient; and

(4) The award official determines that there is a significant Federal interest in the issues involved in the claim.

(c) *Claims defense.* The recipient may incur costs (including legal, technical and administrative) to defend against a contractor claim for increased costs under a contract or to prosecute a claim to enforce a contract provided:

(1) The claim arises from work within the scope of the Cooperative Agreement;

(2) A formal Cooperative Agreement amendment is executed specifically covering the costs before they are incurred;

(3) Settlement of the claim cannot occur without arbitration or litigation;

(4) The claim does not result from the recipient's mismanagement;

(5) The award official determines that there is a significant Federal interest in the issues involved in the claim; and

(6) In the case of defending against a contractor claim, the claim does not result from the recipient's responsibility for the improper action of others.

§ 35.6605 Privity of contract.

Neither EPA nor the United States shall be a party to any contract nor to any solicitation or request for proposals.

§ 35.6610 Contracts awarded by a contractor.

The recipient must require its contractor to comply with the following provisions in the award of contracts (i.e. subcontracts). (This section does not apply to a supplier's procurement of materials to produce equipment, materials and catalog, off-the-shelf, or manufactured items.)

(a) The requirements regarding debarred, suspended, and voluntarily excluded persons in § 35.6560 of this subpart.

(b) The limitations on contract award in § 35.6550(a)(8) of this subpart.

(c) The requirements regarding minority and women's business enterprises, and small business in § 35.6580 of this subpart.

(d) The requirements regarding specifications in § 35.6555 (a)(6) and (c) of this subpart.

(e) The Federal cost principles in 40 CFR 31.22.

(f) The prohibited types of contracts in § 35.6575(a) of this subpart.

(g) The cost, price analysis, and profit analysis requirements in § 35.6585 of this subpart.

(h) The applicable provisions in § 35.6595 (b) and (c) of this subpart.

(i) The applicable provisions in § 35.6555(b)(2).

REPORTS REQUIRED UNDER A COOPERATIVE AGREEMENT

§ 35.6650 Quarterly progress reports.

(a) *Reporting frequency.* The recipient must submit progress reports quarterly on the activities delineated in the Statement of Work. EPA may not require submission of progress reports more often than quarterly. The reports must be submitted within 30 days of the end of each Federal Fiscal quarter.

(b) *Content.* The quarterly progress report must contain the following information:

(1) An explanation of work accomplished during the reporting period, delays, or other problems, if any, and a description of the corrective measures that are planned. For pre-remedial Cooperative Agreements, the report must include a list of the site-specific products completed and the estimated number of technical hours spent to complete each product.

(2) A comparison of the percentage of the project completed to the project schedule, and an explanation of significant discrepancies.

(3) A comparison of the estimated funds spent to date to planned expenditures and an explanation of significant discrepancies. For remedial, enforcement, and removal reports, the comparison must be on a per task basis.

(4) An estimate of the time and funds needed to complete the work required in the Cooperative Agreement, a comparison of that estimate to the time and funds remaining, and a justification for any increase.

§ 35.6655 Notification of significant developments.

Events may occur between the scheduled performance reporting dates which have significant impact upon the Cooperative Agreement-supported activity. In such cases, the recipient must inform the EPA project officer as soon as the following types of conditions become known:

(a) Problems, delays, or adverse conditions which will materially impair the ability to meet the objective of the award. This disclosure must include a statement of the action taken, or contemplated, and any assistance needed to resolve the situation.

(b) Favorable developments which enable meeting time schedules and objectives sooner or at less cost than anticipated or producing more beneficial results than originally planned.

§ 35.6660 Property inventory reports.

(a) *CERCLA-funded property*—(1) *Content.* The report must contain the following information:

(i) Classification and value of remaining supplies;

(ii) Description of all equipment purchased with CERCLA funds, including its current condition;

(iii) Verification of the current use and continued need for the equipment by site, activity, and operable unit, as applicable;

(iv) Notification of any property which has been stolen or vandalized; and

(v) A request for disposition instructions for any equipment no longer needed on the project.

(2) *Reporting frequency.* The recipient must submit an inventory report to EPA at the following times:

(i) Within 90 days after completing any CERCLA-funded project or any response activity at a site; and

(ii) When the equipment is no longer needed for any CERCLA-funded project or any response activity at a site.

(b) *Federally owned property*—(1) *Content.* The recipient must include the following information for each federally owned item in the inventory report:

(i) Description;

(ii) Decal number;

(iii) Current condition; and

(iv) Request for disposition instructions.

(2) *Reporting frequency.* The recipient must submit an inventory report to the appropriate EPA property accountable officer at the following times:

(i) Annually, due to EPA on the anniversary date of the award;

(ii) When the property is no longer needed; and

(iii) Within 90 days after the end of the project period.

§ 35.6665 Procurement reports.

(a) *Department of Labor (DOL) Reports*—(1) *Content.* The recipient must notify the DOL Regional Office of Compliance, in writing, of each construction contract which has or is expected to have an aggregate value of over $10,000 within a 12-month period. The report must include the following:

(i) Construction contractor's name, address, telephone number, and employee identification number;

(ii) Award amount;

(iii) Estimated start and completion dates; and

(iv) Project number, name, and site location.

(2) *Reporting frequency.* The recipient must notify the DOL Office of Compliance within 10 calendar days after the award of each such construction contract. The recipient must submit a copy of the report to the EPA project officer.

(b) *Minority and women's business enterprise (MBE/WBE) Reports.* (1) The recipient must report on its use of MBE and WBE firms by submitting a completed Minority and Women's Business Utilization Report (SF–334) to the award official. Reporting commences with the recipient's award of its first contract and continues until it and its contractors have awarded their last contract for the activities or tasks identified in the Cooperative Agreement. The recipient must submit the MBE/WBE Utilization Report within 30 days after the end of each Federal fiscal quarter, regardless of whether the recipient awards a contract to an MBE or WBE during that quarter.

(2) The recipient must also report on its efforts to encourage MBE participation in the Superfund program pursuant to CERCLA § 105(f). Information on

the recipient's efforts to encourage MBE participation in the Superfund program may be included in each SF–334 submitted quarterly, but is required in the SF–334 submitted for the fourth quarter, due November 1 of each year.

§ 35.6670 Financial reports.

(a) *General.* The recipient must comply with the requirements regarding financial reporting described in 40 CFR 31.41.

(b) *Financial Status Report*—(1) *Content.* (i) The Financial Status Report (SF–269) must include financial information by site, activity, and operable unit, as applicable.

(ii) A final Financial Status Report (FSR) must have no unliquidated obligations. If any obligations remain unliquidated, the FSR is considered an interim report and the recipient must submit a final FSR to EPA after liquidating all obligations.

(2) *Reporting frequency.* The recipient must file a Financial Status Report as follows:

(i) Annually due 90 days after the end of the Federal fiscal year or as specified in the Cooperative Agreement; or if quarterly or semiannual reports are required in accordance with 40 CFR 31.41(b)(3), due 30 days after the reporting period;

(ii) Within 90 calendar days after completing each CERCLA-funded response activity at a site (submit the FSR only for each completed activity); and

(iii) Within 90 calendar days after termination or closeout of the Cooperative Agreement.

RECORDS REQUIREMENTS UNDER A COOPERATIVE AGREEMENT

§ 35.6700 Project records.

The lead agency for the response action must compile and maintain an administrative record consistent with section 113 of CERCLA, the National Contingency Plan, and relevant EPA policy and guidance. In addition, recipients of assistance (whether lead or support agency) are responsible for maintaining project files as described below.

(a) *General.* The recipient must maintain project records by site, activity, and operable unit, as applicable.

(b) *Financial records.* The recipient must maintain records which support the following items:

(1) Amount of funds received and expended; and

(2) Direct and indirect project cost.

(c) *Property records.* The recipient must maintain records which support the following items:

(1) Description of the property;

(2) Manufacturer's serial number, model number, or other identification number;

(3) Source of the property, including the assistance identification number;

(4) Information regarding whether the title is vested in the recipient or EPA;

(5) Unit acquisition date and cost;

(6) Percentage of EPA's interest;

(7) Location, use and condition (by site, activity, and operable unit, as applicable) and the date this information was recorded; and

(8) Ultimate disposition data, including the sales price or the method used to determine the price, or the method used to determine the value of EPA's interest for which the recipient compensates EPA in accordance with §§ 35.6340, 35.6345, and 35.6350 of this subpart.

(d) *Procurement records*—(1) *General.* The recipient must maintain records which support the following items, and must make them available to the public:

(i) The reasons for rejecting any or all bids; and

(ii) The justification for a procurement made on a noncompetitively negotiated basis.

(2) *Procurements in excess of $25,000.* The recipient's records and files for procurements in excess of $25,000 must include the following information, in addition to the information required in paragraph (d)(1) of this section:

(i) The basis for contractor selection;

(ii) A written justification for selecting the procurement method;

(iii) A written justification for use of any specification which does not provide for maximum free and open competition;

(iv) A written justification for the choice of contract type; and

(v) The basis for award cost or price, including a copy of the cost or price analysis made in accordance with § 35.6585 of this subpart and documentation of negotiations.

(e) *Other records.* The recipient must maintain records which support the following items:

(1) Time and attendance records and supporting documentation;

(2) Documentation of compliance with statutes and regulations that apply to the project; and

(3) The number of site-specific technical hours spent to complete each preremedial product.

§ 35.6705 Records retention.

(a) *Applicability.* This requirement applies to all financial and programmatic records, supporting documents, statistical records, and other records which are required to be maintained by the terms of this subpart, program regulations, or the Cooperative Agreement, or are otherwise reasonably considered as pertinent to program regulations or the Cooperative Agreement.

(b) *Length of retention period.* The recipient must maintain all records for 10 years following submission of the final Financial Status Report unless otherwise directed by the EPA award official, and must obtain written approval from the EPA award official before destroying any records. If any litigation, claim, negotiation, audit, cost recovery, or other action involving the records has been started before the expiration of the ten-year period, the records must be retained until completion of the action and resolution of all issues which arise from it, or until the end of the regular ten-year period, whichever is later.

(c) *Substitution of microform.* Microform copies may be substituted for the original records. The recipient must have written EPA approval before destroying original records. The microform copying must be performed in accordance with the technical regulations concerning micrographics of Federal Government records (36 CFR part 1230) and EPA records management procedures (EPA Order 2160).

(d) *Starting date of retention period.* The recipient must comply with the requirements regarding the starting dates for records retention described in 40 CFR 31.42(c) (1) and (2).

§ 35.6710 Records access.

(a) *Recipient requirements.* The recipient must comply with the requirements regarding records access described in 40 CFR 31.42(e).

(b) *Availability of records.* The recipient must, with the exception of certain policy, deliberative, and enforcement documents which may be held confidential, ensure that all files are available to the public.

(c) *Contractor requirements.* The recipient must require its contractor to comply with the requirements regarding records access described in 40 CFR 31.36(i)(10).

OTHER ADMINISTRATIVE REQUIREMENTS FOR COOPERATIVE AGREEMENTS

§ 35.6750 Modifications.

The recipient must comply with the requirements regarding changes to the Cooperative Agreement described in 40 CFR 31.30.

§ 35.6755 Monitoring program performance.

The recipient must comply with the requirements regarding program performance monitoring described in 40 CFR 31.40 (a) and (e).

§ 35.6760 Enforcement and termination for convenience.

The recipient must comply with all terms and conditions in the Cooperative Agreement, and is subject to the requirements regarding enforcement of the terms of an award and termination for convenience described in 40 CFR 31.43 and 31.44.

§ 35.6765 Non-Federal audit.

The recipient must comply with the requirements regarding non-Federal audits described in 40 CFR 31.26.

§ 35.6770 Disputes.

The recipient must comply with the requirements regarding dispute resolution procedures described in 40 CFR 31.70.

§ 35.6775 Exclusion of third-party benefits.

The Cooperative Agreement benefits only the signatories to the Cooperative Agreement.

§ 35.6780 Closeout.

(a) Closeout of a Cooperative Agreement, or an activity under a Cooperative Agreement, can take place in the following situations:

(1) After the completion of all work for a response activity at a site; or

(2) After all activities under a Cooperative Agreement have been completed; or

(3) Upon termination of the Cooperative Agreement.

(b) The recipient must comply with the closeout requirements described in 40 CFR 31.50 and 31.51.

§ 35.6785 Collection of amounts due.

The recipient must comply with the requirements described in 40 CFR 31.52 regarding collection of amounts due.

§ 35.6790 High risk recipients.

If EPA determines that a recipient is not responsible, EPA may impose restrictions on the award as described in 40 CFR 31.12.

REQUIREMENTS FOR ADMINISTERING A SUPERFUND STATE CONTRACT (SSC)

§ 35.6800 General.

An SSC is required when either EPA or a political subdivision is the lead agency for a CERCLA response. This rule does not address whether Indian Tribes are subject to the requirements in § 35.6805(i)(2) (See § 35.610(a)).

(a) *EPA-lead SSC (Two-party SSC).* (1) An SSC with a State or Indian Tribe is required before EPA can obligate or transfer funds for an EPA-lead remedial action.

(2) The State must comply with the requirements described in §§ 35.6805 and 35.6815 of this subpart. The Indian Tribe must comply with the requirements described in § 35.6805 (a) through (h), (i)(4), (l) through (v); § 35.6815(b); and, if appropriate, § 35.6815 (c) and (d).

(b) *Political subdivision-lead SSC (Three-party SSC).* (1) To ensure State involvement as required under section 121(f) of CERCLA and subpart F of the National Contingency Plan, an SSC is required between EPA, the State and a political subdivision before a political subdivision may take the lead for any phase of remedial response. The SSC must contain, or must be amended to include, the State's assurances pursuant to § 35.6805(i) of this subpart before EPA obligates funds for remedial action set forth in the Statement of Work of the SSC.

(2) Both the State and the political subdivision must comply with the requirements described in §§ 35.6805, 35.6815, and 35.6820 of this subpart.

§ 35.6805 Contents of an SSC.

The SSC must include the following provisions:

(a) *General authorities,* which documents the relevant statutes and regulations (of each government entity that is a party to the contract) governing the contract;

(b) *Purpose of the SSC,* which describes the response activities to be conducted and the benefits to be derived;

(c) *Negation of agency relationship* between the signatories, which states that no signatory of the SSC can represent or act on the behalf of any other signatory in any matter associated with the SSC;

(d) *A site description,* pursuant to § 35.6105(a)(2)(i) of this subpart;

(e) *A site-specific Statement of Work,* pursuant to § 35.6105(a)(2)(ii) of this subpart and a statement of whether the contract constitutes an initial SSC or an amendment to an existing contract;

(f) *A statement of intention to follow EPA policy and guidance;*

(g) *A project schedule* to be prepared during response activities;

(h) *A statement desinating a primary contact* for each party to the contract, which designates representatives to act on behalf of each signatory in the implementation of the contract. This statement must document the authority of each project manager to approve modifications to the project so long as such changes are within the scope of the contract and do not significantly impact the SSC;

(i) *The CERCLA assurances,* as appropriate, as described below:

(1) *Operation and maintenance.* The State must provide an assurance pursuant to § 35.6105(b)(1) of this subpart.

(2) *Twenty-year waste capacity.* The State must provide an assurance pursuant to § 35.6105(b)(3) of this subpart.

(3) *Off-site storage, treatment, or disposal.* If off-site storage, destruction, treatment, or disposal is required, the State must provide an assurance pursuant to § 35.6105(b)(4) of this subpart; the political subdivision may not provide this assurance.

(4) *Real Property Acquisition.* When real property must be acquired, the State must provide an assurance pursuant to § 35.6105(b)(5) of this subpart. An Indian Tribe must provide an assurance pursuant to § 35.6110(b)(2).

(5) *Provision of State cost share.* The State must provide assurances for cost sharing pursuant to § 35.6105(b)(2). Even if the political subdivision is providing the actual cost share, the State must guarantee payment of the cost share in the event of default by the political subdivision.

(j) *Cost-share conditions,* which include:

(1) An estimate of the response action cost (excluding EPA's indirect costs) that requires cost share;

(2) The basis for arriving at this figure (See § 35.6285(c) for credit provisions); and

(3) The payment schedule as negotiated by the signatories, and consistent with either a lump-sum or incremental-payment option. Final payment must be made by completion of all activities in the site-specific Statement of Work with the exception of any change orders and claims handled during reconciliation of the SSC;

(k) *Reconciliation provision,* which states that the SSC remains in effect until the financial settlement of project costs and final reconciliation of response costs (including all change orders, claims, overpayments, reimbursements, etc.) ensure that both EPA and the State have satisfied the cost share requirement contained in section 104 of CERCLA, as amended. Overpayments in an SSC may not be used to meet the cost-sharing obligation at another site. Reimbursements for any overpayment will be made to the payer identified in the SSC.

(l) *Amendability of the SSC,* which provides that:

(1) Formal amendments are required when alterations to CERCLA-funded activities are necessary or when alterations impact the State's assurances pursuant to the National Contingency Plan and CERCLA, as amended. Such amendments must include a Statement of Work for the amendment as described in § 35.6805(e) above;

(2) Any change(s) in the SSC must be agreed to, in writing, by the signatories, except as provided elsewhere in the SSC, and must be reflected in all response agreements affected by the change(s);

(m) *List of Support Agency Cooperative Agreements* that are also in place for the site;

(n) *Litigation,* which describes EPA's right to bring an action against any party under section 106 of CERCLA to compel cleanup, or for cost recovery under section 107 of CERCLA.

(o) *Sanctions for failure to comply with SSC terms,* which states that if the signatories fail to comply with the terms of the SSC, EPA may proceed under the provisions of section 104(d)(2) of CERCLA and may seek in the appropriate court of competent jurisdiction to enforce the SSC or to recover any funds advanced or any costs incurred due to a breach of the SSC. Other signatories to the SSC may seek remedies in the appropriate court of competent jurisdiction.

(p) *Site access.* The State or political subdivision or Indian Tribe is expected to use its own authority to secure access to the site and adjacent properties, as well as all rights-of-way and easements necessary to complete the response actions undertaken pursuant to the SSC;

(q) *Joint inspection of the remedy.* Following completion of the remedial action, the State and EPA will jointly inspect the project. The SSC must include a statement indicating the State's approval of the final remedial action report submitted by EPA.

(r) *Exclusion of third-party benefits,* which states that the SSC is intended to benefit only the signatories of the SSC, and extends no benefit or right to any third party not a signatory to the SSC; and

(s) *Any other provision* deemed necessary by all parties to facilitate the response activities covered by the SSC.

(t) *State review.* The State or Indian Tribe must review and comment on the response actions pursuant to the SSC. Unless otherwise stated in the SSC, all time frames for review must follow those prescribed in the NCP.

(u) *Responsible party activities,* which states that if a Responsible Party takes over any activities at the site, the SSC will be modified or terminated, as appropriate.

(v) *Out-of-State or out-of-Indian Tribal jurisdiction transfers of CERCLA waste,* which states that, unless otherwise provided for by EPA or a political subdivision, the State or Indian Tribe must provide the notification requirements described in § 35.6120.

§ 35.6815 Administrative requirements.

In addition to the requirements specified in § 35.6805, the State and/or political subdivision must comply with the following:

(a) *Financial administration.* The State and/or political subdivision must comply with the following requirements regarding financial administration:

(1) *Payment.* The State may pay for its share of the costs of the response activities in cash or credit. As appropriate, specific credit provisions should be included in the SSC consistent with the requirements described in § 35.6285(c) of this subpart. The State may not pay for its cost share using in-kind services, unless the State has entered into a support agency Cooperative Agreement with EPA. The use of the support agency Cooperative Agreement as a vehicle for providing cost share must be documented in the SSC. If the political subdivision agrees to provide all or part of the State's cost share pursuant to a political subdivision-lead Cooperative Agreement, the political subdivision may pay for those costs in cash or in-kind services under that agreement. The use of a political subdivision-lead Cooperative Agreement as a vehicle for providing cost share must also be documented in the SSC. The State or political subdivision must make payments during the course of the site-specific project and must complete payments by completion of activities in the site-specific Statement of Work. (See § 35.6255 of this subpart for requirements concerning cost sharing under a support agency Cooperative Agreement.) The specific payment terms must be documented in the SSC pursuant to § 35.6805 of this subpart.

(2) *Collection of amounts due.* The State and/or political subdivision must comply with the requirements described in 40 CFR 31.52(a) regarding collection of amounts due.

(3) *Failure to comply with negotiated payment terms.* Failure to comply with negotiated payment terms may be construed as default by the State on its required assurances, even if the political subdivision is responsible for providing all or part of the cost share. (See § 35.6805(i)(5) of this subpart.)

(b) *Personal Property.* The State, Indian Tribe, or political subdivision is required to accept title. The following requirements apply to equipment used as all or part of the remedy:

(1) *Fixed in-place equipment.* EPA no longer has an interest in fixed in-place equipment once the equipment is installed.

(2) *Equipment that is an integral part of services to individuals.* EPA no longer has an interest in equipment that is an integral part of services to individuals, such as pipes, lines, or pumps providing hookups for homeowners on an existing water distribution system, once EPA certifies that the remedy is operational and functional.

(c) *Reports.* The State and/or political subdivision or Indian Tribe must comply with the following requirements regarding reports:

(1) *EPA-lead.* The nature and frequency of reports between EPA and the State or Indian Tribe will be specified in the SSC.

(2) *Political subdivision-lead.* The political subdivision must submit to the State a copy of all reports which the political subdivision is required to submit to EPA in accordance with the requirements of its Cooperative Agreement. (See § 35.6650 for requirements regarding quarterly progress reports.)

(d) *Records.* The State and political subdivision or Indian Tribe must maintain records on a site-specific basis.

The State and political subdivision or Indian Tribe must comply with the requirements regarding record retention described in § 35.6705 and the requirements regarding record access described in § 35.6710.

§ 35.6820 Conclusion of the SSC.

In order to conclude the SSC, the signatories must:

(a) Satisfactorily complete the response activities at the site and make all payments based upon project costs determined in § 35.6805(j);

(b) Produce a final accounting of all project costs, including change orders and outstanding contractor claims; and

(c) Submit all State cost-share payments to EPA (see § 35.6805(i)(5)), undertake responsibility for O&M, and, if applicable, accept interest in real property (see § 35.6805(i)(4)).

Subpart P—Financial Assistance for the National Estuary Program

AUTHORITY: Sec. 320 of the Clean Water Act, as amended (33 U.S.C. 1330).

SOURCE: 54 FR 40804, Oct. 3, 1989 (interim), unless otherwise noted.

§ 35.9000 Applicability.

This subpart codifies policies and procedures for financial assistance awarded by the EPA to state, interstate, and regional water pollution control agencies and entities and other eligible agencies, institutions, organizations, and individuals for pollution abatement and control programs under the National Estuary Program (NEP). These provisions supplement the EPA general assistance regulations in 40 CFR parts 30 and 31.

§ 35.9005 Purpose.

Section 320(g) of the Clean Water Act (CWA) authorizes assistance to eligible states, agencies, entities, institutions, organizations, and individuals for developing a comprehensive conservation and management plan (CCMP) for an estuary.

§ 35.9010 Definitions.

Aggregate costs. The total cost of all research, surveys, studies, modeling, and other technical work completed by a Management Conference during a fiscal year to develop a Comprehensive Conservation and Management Plan for the estuary.

Annual work plan. The plan, developed by the Management Conference each year, which documents projects to be undertaken during the upcoming year. The Annual Work Plan is developed within budgetary targets provided by EPA.

Five-Year State/EPA Conference Agreement. Agreement negotiated among the States represented in a Management Conference and the EPA shortly after the Management Conference is convened. The agreement identifies milestones to be achieved during the term of the Management Conference.

Management Conference. A Management Conference convened by the Administrator under Section 320 of the CWA for an estuary in the NEP.

National Program Assistance Agreements. Assistance Agreements approved by the EPA Assistant Administrator for Water for work undertaken to accomplish broad NEP goals and objectives.

Work Program. The Scope of Work of an assistance application, which identifies how and when the applicant will use funds to produce specific outputs.

§ 35.9015 Summary of annual process.

(a) EPA considers various factors to allocate among the Management Conferences the funds requested in the President's budget for the NEP. Each year, the Director of the Office of Marine and Estuarine Protection issues budgetary targets for the NEP for each Management Conference. These targets are based upon negotiated Five-Year State/EPA Conference Agreements.

(b) Using the budgetary targets provided by EPA, each Management Conference develops Annual Work Plans describing the work to be completed during the year and identifies individual projects to be funded for the completion of such work. Each applicant having a scope of work approved by the Management Conference completes a standard EPA application, including a proposed work program. After the applicant submits an application, the Regional Administrator reviews it and, if it meets applicable requirements, approves the application and agrees to

make an award when funds are available. The Regional Administrator awards assistance from funds appropriated by Congress for that purpose.

(c) The recipient conducts activities according to the approved application and assistance award. The Regional Administrator evaluates recipient performance to ensure compliance with all conditions of the assistance award.

(d) The Regional Administrator may use funds not awarded to an applicant to supplement awards to other recipients who submit a score of work approved by the management conference for NEP funds.

(e) The EPA Assistant Administrator for Water may approve National Program awards as provided in § 35.9070.

§ 35.9020 Planning targets.

The EPA Assistant Administrator for Water develops planning targets each year to help each Management Conference develop an Annual Work Plan. These targets are broad budgetary goals for total expenditures by each estuary program and are directly related to the activities that are to be carried out by each Management Conference in that year as specified in the Five-Year State/EPA Conference Agreement. The planning targets also are based on the Director's evaluation of the ability of each Management Conference to use appropriated funds effectively.

§ 35.9030 Work program.

The work program is part of the application for financial assistance and becomes part of the award document. It is part of the basis for an award decision and the basis for management and evaluation of performance under an assistance award. The work program must specify the level of effort and amount and source of funding estimated to be needed for each identified activity, the outputs committed for each activity, and the schedule for delivery of outputs.

§ 35.9035 Budget period.

An applicant may choose its budget period in consultation with and subject to the approval of the Regional Administrator.

§ 35.9040 Application for assistance.

Each applicant should submit a complete application at least 60 days before the beginning of the budget period. In addition to meeting applicable requirements contained in 40 CFR part 30 or 31, a complete application must contain a discussion of performance to date under an existing award, the proposed work program, and a list of all applicable EPA-approved State strategies and program plans, with a statement certifying that the proposed work program is consistent with these elements. The annual workplan developed and approved by the management conference each fiscal year must demonstrate that non-Federal sources provide at least 25 percent of the aggregate costs of research, surveys, studies, modeling, and other technical work necessary for the development of a CCMP for the estuary. Each application must contain a copy of the Annual Work Plan as specified in § 35.9065(c) (2) and (3) for the current Federal fiscal year. The funding table in the workplan must demonstrate that the 25 percent match requirements is being met, and the workplan table of project status must show the sources of funds supporting each project.

§ 35.9045 EPA action on application.

The Regional Administrator will review each completed application and should approve, conditionally approve, or disapprove the application within 60 days of receipt. When funds are available, the Regional Administrator will award assistance based on an approved or conditionally approved application. For a continuation award made after the beginning of the approved budget period, EPA will reimburse the applicant for allowable costs incurred from the beginning of the budget period, provided that such costs are contained in the approved application and that the application was submitted before the expiration of the prior budget period.

(a) *Approval.* The Regional Administrator will approve the application only if it satisfies the requirements of CWA section 320; the terms, conditions, and limitations of this subpart; and the applicable provisions of 40 CFR parts 30, 31, and other EPA assistance regulations. The Regional Administrator

must also determine that the proposed outputs are consistent with EPA guidance or otherwise demonstrated to be necessary and appropriate; and that achievement of the proposed outputs is feasible, considering the applicant's past performance, program authority, organization, resources, and procedures.

(b) *Conditional approval.* The Regional Administrator may conditionally approve the application after consulting with the applicant if only minor changes are required. The award will include the conditions the applicant must meet to secure final approval and the date by which those conditions must be met.

(c) *Disapproval.* If the application cannot be approved or conditionally approved, the Regional Administrator will negotiate with the applicant to change the output commitments, reduce the assistance amount, or make any other changes necessary for approval. If negotiation fails, the Regional Administrator will disapprove the application in writing.

§ 35.9050 Assistance amount.

(a) *Determining the assistant amount.* In determining the amount of assistance to an applicant, the Regional Administrator will consider the Management Conference planning target, the extent to which the applicant's Work Program is consistent with EPA guidance, and the anticipated cost of the applicant's program relative to the proposed outputs.

(b) *Reduction of assistance amount.* If the Regional Administrator determines that the proposed outputs do not justify the level of funding requested, he will reduce the assistance amount. If the evaluation indicates that the proposed outputs are not consistent with the priorities contained in EPA guidance, the Regional Administrator may reduce the assistance amount.

§ 35.9055 Evaluation of recipient performance.

The Regional Administrator will oversee each recipient's performance under an assistance agreement. In consultation with the applicant, the Regional Administrator will develop a process for evaluating the recipient's performance. The Regional Administrator will include the schedule for evaluation in the assistance agreement and will evaluate recipient performance and progress toward completing the outputs in the approved work program according to the schedule. The Regional Administrator will provide the evaluation findings to the recipient and will include these findings in the official assistance file. If the evaluation reveals that the recipient is not achieving one or more of the conditions of the assistance agreement, the Regional Administrator will attempt to resolve the situation through negotiation. If agreement is not reached, the Regional Administrator may impose sanctions under the applicable provisions of 40 CFR part 30 or 31.

§ 35.9060 Maximum Federal share.

The Regional Administrator may provide up to 100 percent of the approved work program costs for a particular application provided that non-Federal sources provide at least 25 percent of the aggregate costs of research, surveys, studies, modeling, and other technical work necessary for the development of a comprehensive conservation and management plan for the estuary as specified in the estuary Annual Work Plan for each fiscal year.

§ 35.9065 Limitations.

(a) *Management conferences.* The Regional Administrator will not award funds pursuant to CWA section 320(g) to any applicant unless and until the scope of work and overall budget have been approved by the Management Conference of the estuary for which the work is proposed.

(b) *Elements of annual workplans.* Annual Work Plans to be prepared by estuary Management Conferences must be reviewed by the Regional Administrator before final ratification by the Management Conference and must include the following elements:

(1) *Introduction.* A discussion of achievements in the estuary, a summary of activities undertaken in the past year to further each of the seven purposes of a Management Conference specified in section 320(b) of the CWA, the major emphases for activity in the

upcoming year, and a schedule of milestones to be reached during the year.

(2) *Funding sources.* A table of fund sources for activities in the new year, including a description of the sources and types (e.g., in-kind contributions to be performed by the applicant) of funds comprising the contribution by applicants or third parties, and the source and type of any other non-Federal funds or contributions.

(3) *Projects.* A description of each project to be undertaken, a summary table of project status listing all activities, the responsible organization or individual, the products expected from each project, approximate schedules, budgets, and the source and type of the non-Federal 25 percent minimum cost share of the aggregate costs of research, surveys, studies, modeling, and other technical work necessary for the development of a comprehensive conservation and management plan for an estuary.

[54 FR 40804, Oct. 3, 1989, as amended at 59 FR 61126, Nov. 29, 1994]

§ 35.9070 National program assistance agreements.

The Assistant Administrator for Water may approve the award of NEP funds for work that has broad applicability to estuaries of national significance. These awards shall be deemed to be consistent with Annual Work Plans and Five-Year State/EPA Conference Agreements approved by individual management conferences. The amount of a national program award shall not exceed 75 percent of the approved work program costs provided the non-Federal share of such costs is provided from non-Federal sources.

Subpart Q—General Assistance Grants to Indian Tribes

Source: 58 FR 63878, Dec. 2, 1993, unless otherwise noted.

§ 35.10000 Authority.

This subpart is issued under the Indian Environmental General Assistance Program Act of 1992 (''the Act''), 42 U.S.C. 4368b.

§ 35.10005 Purpose and scope.

(a) This subpart codifies requirements for administering general assistance grants to Indian tribal governments and intertribal consortia to build capacity to administer environmental regulatory programs on Indian lands.

(b) 40 CFR part 31, ''Uniform Administrative Requirements for Grants and Cooperative Agreements to State and Local Governments,'' establishes consistency and uniformity among Federal agencies in the administration of grants and cooperative agreements to State, local, and Indian Tribal governments. This subpart supplements the requirements contained in 40 CFR part 31, including its provisions for accounting, auditing, evaluating, and reviewing any programs or activities funded in whole or in part by an EPA grant.

§ 35.10010 Definitions.

(a) *Indian tribal government.* Any Indian tribe, band, nation, or other organized group or community, including any Alaska Native village or regional or village corporation (as defined in, or established pursuant to, the Alaska Native Claims Settlement Act (43 U.S.C. 1601, *et seq.*)), which is recognized by the United States Department of the Interior as eligible for the special services provided by the United States to Indians because of their status as Indians.

(b) *Intertribal Consortia or Intertribal Consortium.* A partnership between two or more Indian tribal governments authorized by the governing bodies of those tribes to apply for and receive assistance under this program.

(c) *General assistance.* Financial assistance provided under this program to Indian tribal governments or to an intertribal consortia or consortium to cover the costs of planning, developing, and establishing the capability to implement environmental protection programs on Indian lands. General assistance may be provided through either a grant or a cooperative agreement in accordance with the Federal Grant and Cooperative Agreement Act, 31 U.S.C. 6301 *et seq.*

§35.10015 Eligible recipients.

The following entities are eligible to receive financial assistance under this program:

(a) An Indian tribal government.

(b) An intertribal consortium or consortia.

§35.10020 Eligible activities.

(a) Activities eligible for funding under this program are those for planning, developing, and establishing capability to implement environmental protection programs, including solid and hazardous waste programs.

(b) Alaska Native village corporations and regional corporations are not eligible to receive general assistance for capacity-building to develop regulatory programs.

§35.10025 Limitations.

Financial assistance provided under this program is subject to the following terms and limitations:

(a) No initial grant provided under this program for a fiscal year shall be for an amount less than $75,000. A grant amendment may be for an amount less than $75,000.

(b) No single grant awarded under this program may be for an amount exceeding ten percent of total annual funds appropriated under section 11(h) of the Act.

(c) Awards made pursuant to this section shall remain available until expended within the term of the award. The term of an award may exceed one year, but may not exceed four years.

(d) No award under this program shall result in reduction of total EPA grants for environmental programs to the recipient. Receipt of funds under this program shall not preclude an eligible Indian tribal government or intertribal consortium from receiving individual program or project-specific grants or cooperative agreements. Funds provided under this program may be used to supplement other funds provided by EPA through individual program or project-specific grants or cooperative agreements.

§35.10030 Grant management.

Procedures for accounting, auditing, evaluating, and reviewing any programs or activities funded in whole or in part for a general assistance grant under this program shall be governed by regulations at 40 CFR part 31.

§35.10035 Procurement under general assistance agreements.

Procurement of goods or services by recipients funded under this program shall be governed by the following requirements:

(a) *Competition.* To the extent permitted by 25 U.S.C. 450e(b):

(1) The recipient must provide maximum open and free competition.

(2) Recipients must not unduly restrict or eliminate competition.

(b) *Documentation.* Recipients must document all procurement activities with written records that furnish reasons for decisions.

(c) *Cost.*

(1) The recipient must determine that all costs are reasonable.

(2) The recipient must comply with the cost and price analysis requirements in 40 CFR 31.36(f).

(d) *Debarment.* Recipients and contractors must not make any contract at any time to anyone who is on the ''List of Parties Excluded from Federal Procurement or Nonprocurement Programs.''

(e) *Recipient Responsibility.*

(1) The recipient is responsible for the settlement and satisfactory completion of all contractual and administrative issues arising out of contracts entered into under a grant.

(2) The recipient must ensure that all contractors perform in accordance with the terms and conditions of the contract.

(f) *Responsible contractors.* The recipient shall award contracts only to responsible contractors that possess the potential ability to perform successfully under the terms and conditions of a proposed contract.

(g) *Disadvantaged business enterprises.* The recipient shall comply with the ''Small, Minority, Women's and Labor Surplus Area Business'' requirements in 40 CFR 31.36(e).

(h) *Illegal contracts.* Recipients may not award cost-plus-percentage-of-cost or percentage-of-construction-cost contracts.

(i) *Contract provisions.* The recipient must include the following provisions in each contract:

(1) Statement of work;

(2) Schedule for performance;

(3) Due dates for deliverables;

(4) Total cost of the contract;

(5) Payment provisions; and

(6) The following clauses from 40 CFR 33.1030, ''Model contract clauses'':

(i) Supersession;

(ii) Privity of Contract;

(iii) Termination;

(iv) Remedies;

(v) Audit, Access to Records;

(vi) Covenant Against Contingent Fees;

(vii) Gratuities;

(viii) Responsibility of the Contractor; and

(ix) Final Payment.

(j) *Subcontracting.* A contractor must comply with the following provisions in its award of subcontracts (these requirements do not apply to subcontractors for the supply of materials to produce equipment, materials, and subcontracts for catalog, off-the-shelf, or manufactured items):

(1) Section 35.10035(b) Documentation;

(2) Section 35.10035(c) Cost;

(3) Section 35.10035(d) Debarment;

(4) Section 35.10035(f) Responsible contractor;

(5) Section 35.10035(g) Disadvantaged business enterprises;

(6) Section 35.10035(h) Illegal contracts; and

(7) Section 35.10035(i) Contract provisions.

(k) *Bid protests.* The recipient must establish a procedure for resolving protests which complies with the provisions of 40 CFR 31.36(b)(12).

(l) *Procurement.* Recipients shall not divide any procurements into smaller parts to get under any dollar limit.

(1) If the aggregate amount of the purchase is $1000 or less, the recipient may make the purchase as long as the recipient demonstrates that the price is reasonable.

(2) If the aggregate amount of the proposed contract is over $1000 but less than $25,000, the recipient must obtain and document oral or written price quotations from two or more qualified sources.

(3) If the aggregate amount of the proposed contract is $25,000 and over but less than $50,000, the recipient must:

(i) Solicit written bids/proposals from two or more sources who are willing and able to do the work;

(ii) Provide to potential sources a clear and accurate description of the work to be performed;

(iii) Provide the criteria the recipient will use to evaluate bids/proposals;

(iv) Objectively evaluate all bids/proposals submitted; and

(v) Notify all unsuccessful bidders/proposers.

(4) If the aggregate amount of the proposed contract is $50,000 or over, the recipient must follow the procurement rules in 40 CFR 31.36.

(m) *Non-competitive procurements.* The recipient shall comply with the non-competitive procurement requirements in 40 CFR 31.36(d)(4).

PART 39—LOAN GUARANTEES FOR CONSTRUCTION OF TREATMENT WORKS

Sec.
39.100 Purpose.
39.105 Definitions.
39.110 Application.
39.115 Conditions of loan guarantee.
39.120 Limitation on assistance.
39.125 Determination of eligibility for assistance and issuance of guarantee.
39.130 Determination of reasonable rates.
39.135 Loan terms.
39.140 Loan proceeds.
39.145 Loan payments by borrower.
39.150 Defaults and remedies.

AUTHORITY: Pub. L. 94–558, Sec. 213, Federal Water Pollution Control Act, as amended (86 Stat. 816 *et seq.* (33 U.S.C. 1281 *et seq.*) as amended).

SOURCE: 42 FR 25666, May 18, 1977, unless otherwise noted.

§ 39.100 Purpose.

This part implements section 213 of the Federal Water Pollution Control Act Amendments of 1972, as amended, by establishing policies and procedures to ensure that inability to borrow necessary funds from other sources on reasonable terms does not prevent the construction of any waste water treatment works for which a grant has been, or will be, awarded in compliance with

the Act. It provides for the guarantee by the Administrator of full and timely payment of principal and interest on any obligation of the State, municipality, or intermunicipal or interstate agency issued directly and exclusively to the Federal Financing Bank to finance the local share of the costs of any such project.

§39.105 Definitions.

The following words and terms shall have the meaning set forth below:

(a) *Act.* The Federal Water Pollution Control Act Amendments of 1972, as amended (Pub. L. 92–500, 33 U.S.C. 1281 *et seq.*).

(b) *Bank.* The Federal Financing Bank established pursuant to the Federal Financing Bank Act of 1973 (12 U.S.C. 2281 *et seq.*).

(c) *Guaranteed Loan Program.* The program established pursuant to Pub. L. 94–558 which amended the Act by adding section 213.

(d) *Loan agreement.* A written agreement between the Bank and the guaranteed borrower stating the terms of the loan.

(e) *Loan guarantee agreement.* A written agreement between EPA and the guaranteed borrower stating the terms of the loan guarantee.

(f) *Local share.* The amount of the total grant eligible and allowable project costs which a public body is obligated to pay under the grant.

(g) *Note.* An evidence of the debt, including a bond, obligation to pay, or other evidence of indebtedness where appropriate.

(h) *Public body.* A State, interstate agency, a municipality, or an intermunicipal agency, as defined below:

(1) *State.* A State, the District of Columbia, the Commonwealth of Puerto Rico, the Virgin Islands, Guam, American Samoa, and the Trust Territory of the Pacific Islands.

(2) *Interstate agency.* An agency of two or more States established by or pursuant to an agreement or compact approved by the Congress, or any other agency of two or more States, having substantial powers or duties pertaining to the control of water pollution.

(3) *Municipality.* A city, town, borough, county, parish, district, association, or other public body (including an intermunicipal agency of two or more of the foregoing entities) created by or pursuant to State law, or an Indian Tribe or an authorized Indian tribal organization, having jurisdiction over disposal of sewage, industrial wastes, or other wastes, or a designated and approved management agency under section 208 of the Act. This definition excludes a special district, such as a school district, which does not have as one of its principal responsibilities the treatment, transport, or disposal of liquid wastes.

(i) *Reasonable terms.* Rates determined by the Secretary of the Treasury with relationship to the current average yield on outstanding marketable obligations of municipalities of comparable maturity.

§39.110 Application.

(a) *Who may apply.* A public body which has applied for a grant under Title II of the Act (including grantees whose projects are eligible for reimbursement under section 206 of that title) or which has committed itself to finance the local share of any project(s) for which a grant has been awarded, or for which an application is being processed, may apply through the State agency to the appropriate Regional Administrator for a loan and the commitment to guarantee such loan to finance the local share of such project.

(b) *Financing.* Applications for loan guarantees will be limited to:

(1) Financing that portion of the local share for which permanent financing has not been arranged.

(2) Refinancing that portion of the local share of those projects on which construction has not been completed and for which the public body initially held a public solicitation on a bond issue, received no bids, and subsequently accepted or negotiated financing at interest rates greater than 10 percent.

(c) *Application requirements.* The application shall include documentation of the following:

(1) *Inability to obtain necessary financing.* The applicant shall document that it is unable to obtain on reasonable terms as defined in §39.105(i) sufficient credit to finance the local share of the

project(s). Such documentation shall include:

(i) The results of any public solicitation for bids for obligations to finance the local share or (ii) a certification, acceptable to the Administrator, from a municipal bond underwriter(s), which submitted or might normally have submitted a bid for the obligations. An applicant with an obligation to pay the local share not in excess of $250,000 may obtain certification from two or more local or regional banks to meet paragraph (c)(1)(ii) of this section. An applicant representing communities with a population of 10,000 or less must also submit a written statement from an authorized representative of the Farmers Home Administration that grants, loans, or loan guarantees are not available from Farmers Home Administration in an adequate amount or within a reasonable time, as determined by the Administrator.

(2) *Ability to repay*. The application for a loan guarantee shall be accompanied by an official statement intended to provide EPA with the information needed to reach an informed judgment as to whether there is reasonable assurance of repayment. The official statement must conform to the guidelines for such statement which are available to applicants from the EPA regional office upon request.

(3) *Legal authority of applicant*. The application shall be accompanied by a legal opinion establishing that the applicant has legal authority to obligate itself for payment of the local share, to comply with the loan conditions, and to issue the obligations, and that the obligations will be legal and binding obligations.

(4) *Assurances*. The application shall be accompanied by assurances set forth in an ordinance or other evidence of authority acceptable to the Administrator that it can and will comply with all of the conditions set forth in § 39.115.

(d) *Fees*. The following fees will be charged in order to make the program self-sustaining. These fees may be revised from time to time as determined by the Administrator.

(1) *Application processing*. EPA will charge a non-refundable minimum fee of $1,000 or ⅛ of one percent of the loan amount, whichever is greater, but not to exceed $25,000 for processing applications. This fee will be submitted with the application and will be retained by the EPA whether or not a loan is consummated.

(2) *Fee for issuance of a commitment to guarantee*. A fee will be charged for the issuance of a commitment to guarantee a loan. This fee will be ½ of 1 percent of the principal amount of the loan, and shall be placed in a contingency reserve to offset defaults. This fee is contingent upon the loan being obtained by the applicant and is payable within 30 days of the date of loan approval.

(e) *Format*. The Administrator may, from time to time, prescribe a form or format for the submission of the application or any portion thereof.

§ 39.115 Conditions of loan guarantee.

Any loan guarantee made pursuant to this part shall be subject to the following conditions:

(a) *Step 1 or Step 2*. Each public body applying for a loan guarantee for the local share of Step 1 or Step 2 costs must assure that:

(1) It will repay the loan using all local resources legally available; and

(2) Any funds due to the public body from the amounts appropriated under section 206 of the Act may be used if such use is necessary for repayment.

(b) *Step 3*. Each public body applying for a loan for the local share of Step 3 costs must assure that:

(1) It will repay the loan using all local resources legally available and, if necessary, (i) all or any portion of the funds retained by it under section 204(b)(3) of the Act, and (ii) any funds due to such grantee from the amounts appropriated under section 206 of the Act;

(2) The facilities are maintained in good repair and operating condition during the period in which the notes or the obligations financed by the Bank are outstanding;

(3) Adequate insurance and bonding are maintained to protect the guarantor;

(4) Financial reports and records necessary to reflect the planned and actual receipt of revenues for repayment are maintained and preserved until 3 years after the notes or the obligations

financed by the Bank have been retired.

(5) Revenue plans adequate to assure repayment of principal and interest of the notes or the obligations financed by the Bank are adopted; and

(6) The Administrator is promptly notified whenever it appears that projected annual revenues will be insufficient to meet payments for principal, interest, and operating and maintenance costs. Such notification shall include a description of the steps being taken to remedy the problem.

(c) *Other covenants.* Among other covenants made by the public body in the loan guarantee are the following;

(1) *Application of loan proceeds.* The loan proceeds shall only be applied to the payment of costs associated with the project for which EPA has awarded grant assistance in accordance with §39.140.

(2) *Payment.* The public body covenants that if amounts adequate for the payment of principal and interest are not available when due and payable, appropriate steps will be taken to levy sufficient additional taxes, fees, or charges and to make such payments in a timely manner.

(3) *Accounts and reports.* The public body shall keep complete and accurate books, records, and accounts relating to the loan, the loan guarantee, and the funds and accounts used to pay the amounts due on the loan. Such books, records, and accounts shall be subject to inspection by the Administrator or the Comptroller General of the United States at reasonable times.

(4) *Status of other encumbrances.* The public body will not on or after the date of execution of the loan guarantee by EPA, create or suffer to be created any lien or charge, which would constitute a lien prior to the lien created to secure the loan. Any bonded indebtedness or liens created by the public body on or after the date of execution of the loan guarantee by EPA and associated with the treatment works being constructed with Federal grant assistance may, at the discretion of the Administrator, be on a parity with the lien of the loan guaranteed by the Administrator.

(d) *Enforcement.* The public body agrees to the enforcement of the foregoing conditions by the Administrator in a court of appropriate jurisdiction pursuant to any of the remedies provided for under §39.150, Defaults and remedies, in order to avert an Event of Default.

§39.120 Limitation on assistance.

The amount of any grant, loan, loan guarantee, or other assistance available from another Federal agency, a State, or other third parties on reasonable terms shall be deducted from the local share amount before the loan guarantee amount is determined.

§39.125 Determination of eligibility for assistance and issuance of guarantee.

(a) The Administrator shall make the following determinations before issuing a loan guarantee:

(1) The project for which the loan guarantee is requested is eligible for grant assistance under Title II of the Act;

(2) The applicant is unable to obtain, on reasonable terms, sufficient credit to finance the local share without such a loan guarantee; and

(3) There is reasonable assurance that the applicant will be able to repay the loan or obligation to the Bank.

(b) If the application is approved, the Administrator will issue the loan guarantee and, subsequent to grant award, will request issuance by the Bank.

(c) If the loan application is disapproved, such disapproval shall be final and conclusive unless appealed within 30 days after receipt of the notice of disapproval pursuant to subpart J, Disputes, of the general grant regulations (40 CFR 30.1100 *et seq.*).

§39.130 Determination of reasonable rates.

The Secretary of the Treasury in accordance with the Act shall make a determination of whether financing is available at reasonable rates.

§39.135 Loan terms.

(a) *Interest rates.* The interest rate(s), to be charged for each loan shall be determined by the Secretary of the Treasury in accordance with section 6(b) of the Federal Financing Bank Act of 1973.

(b) *Repayment period.* The repayment period for any obligation guaranteed by the Environmental Protection Agency shall be for a reasonable term not to exceed the useful life of the project or forty years whichever is less.

§ 39.140 Loan proceeds.

The loan proceeds shall be applied solely to pay costs associated with the construction of the treatment works for which EPA has awarded a grant. Loan proceeds may be dispensed in a lump sum upon execution of the loan agreement, or drawdowns under the loan agreement may be made pursuant to a schedule or requests submitted to the Bank by the borrower. Any loan proceeds or drawdown requests which are paid in advance of the current need for funds to pay costs associated with the EPA grant will be placed by the borrower in investments approved by the Bank under the loan agreement until such time as the proceeds are applied to such costs.

§ 39.145 Loan payments by borrower.

The borrower will submit his payments of principal and interest on the loan directly to the Bank in accordance with the loan agreement. A late payment penalty of 1 percent per month of the payment amount due shall be charged pursuant to the loan agreement and the provisions of the loan guarantee agreement in the event any payment of principal and interest is not paid when due.

§ 39.150 Defaults and remedies.

(a) Each of the following events shall be defined as an ''Event of Default'':

(1) Default by the public body in the payment of any Principal Installment, if any, on any loan guaranteed by the Administrator when due;

(2) Default by the public body in the payment of any installment of interest on the loan when due; and

(3) Failure or refusal by the public body to comply with section 213 of the Act, or default in the performance or observance of any other of the covenants, agreements, or conditions contained in the loan agreement, or loan guarantee agreement, where such failure, refusal or default shall continue for a period of 45 days after written notice thereof is issued by the Administrator.

(b) The loan agreement and guarantee shall provide that upon the happening and continuance of any event described in paragraph (a) of this section, the Administrator may proceed on behalf of the Environmental Protection Agency and the United States to protect and enforce its rights and the rights of the Federal Financing Bank by such of the following remedies as the Administrator being advised by counsel, shall deem most effectual:

(1) Enforce by mandamus or other suit, action or proceedings at law or in equity all rights of the Administrator including the rights to require the public body to enforce, collect and receive taxes, fees, or charges adequate to carry out the covenant or payment of principal and interest when due, and to require the public body to carry out any other covenant or agreement with the Administrator to perform its duties under the Act, these regulations and the loan agreement and loan guarantee agreement;

(2) Bring suit upon the loan;

(3) Require the public body by action or suit to account as if it were the trustee of an express trust for the holders of the evidence of indebtedness of the loan;

(4) Enjoin by action or suit any acts or things which may be unlawful or in violation of the rights of the Administrator or the Bank;

(5) Declare all remaining payments of principal and interest on the loan due and payable, and, if all default shall be made good, then, to annul such declaration and its consequences; and

(6) In the event that all the remaining principal and interest on the loan be declared due and payable, apply to a court having jurisdiction for other appropriate administrative and judicial relief.

PART 40—RESEARCH AND DEMONSTRATION GRANTS

Sec.

40.100 Purpose of regulation.
40.105 Applicability and scope.
40.110 Authority.
40.115 Definitions.
40.115–1 Construction.
40.115–2 Intermunicipal agency.

40.115–3 Interstate agency.
40.115–4 Municipality.
40.115–5 Person.
40.115–6 State.
40.120 Publication of EPA research objectives.
40.125 Grant limitations.
40.125–1 Limitations on duration.
40.125–2 Limitations on assistance.
40.130 Eligibility.
40.135 Application.
40.135–1 Preapplication coordination.
40.135–2 Application requirements.
40.140 Criteria for award.
40.140–1 All applications.
40.140–2 [Reserved]
40.140–3 Federal Water Pollution Control Act.
40.145 Supplemental grant conditions.
40.145–1 Resource Conservation and Recovery Act.
40.145–2 Federal Water Pollution Control Act.
40.145–3 Projects involving construction.
40.150 Evaluation of applications.
40.155 Availability of information.
40.160 Reports.
40.160–1 Progress reports.
40.160–2 Financial status report.
40.160–3 Reporting of inventions.
40.160–4 Equipment report.
40.160–5 Final report.
40.165 Continuation grants.

AUTHORITY: Cited in §40.110.

SOURCE: 38 FR 12784, May 15, 1973, unless otherwise noted.

§40.100 Purpose of regulation.

These provisions establish and codify policies and procedures governing the award of research and demonstration grants by the Environmental Protection Agency.

§40.105 Applicability and scope.

This part establishes mandatory policies and procedures for all EPA research and demonstration grants. The provisions of this part supplement the EPA general grant regulations and procedures (40 CFR part 30). Accordingly, all EPA research and demonstration grants are awarded subject to the EPA interim general grant regulations and procedures (40 CFR part 30) and to the applicable provisions of this part 40.

§40.110 Authority.

EPA research and demonstration grants are authorized under the following statutes:

(a) The Clean Air Act, as amended, 42 U.S.C. 1857 *et seq.*

(1) Section 103 (42 U.S.C. 1857b) authorizes grants for research and demonstration projects relating to the causes, effects, extent, prevention, and control of air pollution.

(2) Section 104 (42 U.S.C. 1857b–1) authorizes grants for research and development of new and improved methods for the prevention and control of air pollution resulting from the combustion of fuels.

(b) The Federal Water Pollution Control Act, as amended, Public Law 92–500.

(1) Section 104(b) (33 U.S.C. 1254(b)) authorizes grants for research and demonstration projects relating to the causes, effects, extent, prevention, reduction, and elimination of water pollution.

(2) Section 104(h) (33 U.S.C. 1254(h)) authorizes grants for research and development of new and improved methods for the prevention, removal, reduction, and elimination of pollution in lakes, including the undesirable effects of nutrients and vegetation, and for construction of publicly owned research facilities for such purpose.

(3) Section 104(i) (33 U.S.C. 1254(i)) authorizes grants for research, studies, experiments, and demonstrations relative to the removal of oil from any waters and for the prevention, control, and elimination of oil and hazardous substances pollution.

(4) Section 104(r) (33 U.S.C. 1254(r)) authorized grants for the conduct of basic research into the structure and function of freshwater aquatic ecosystems, and to improve understanding of the ecological characteristics necessary to the maintenance of the chemical, physical, and biological integrity of freshwater aquatic ecosystems.

(5) Section 104(s) (33 U.S.C. (s)) authorizes grants to conduct and report on interdisciplinary studies on river systems, including hydrology, biology, ecology, economics, the relationship between river uses and land uses, and the effects of development within river basins on river systems and on the value of water resources and water-related activities.

(6) Section 105(a) (33 U.S.C. 1255(a)) authorizes grants for research and demonstration of new or improved

methods for preventing, reducing, and eliminating the discharge into any waters of pollutants from sewers which carry storm water or both storm water and pollutants; and for the demonstration of advanced waste treatment and water purification methods (including the temporary use of new or improved chemical additives which provide substantial immediate improvement to existing treatment processes), or new or improved methods of joint treatment systems for municipal and industrial wastes.

(7) Section 105(b) (33 U.S.C. 1255(b)) authorizes grants for demonstrating, in river basins or portions thereof, advanced treatment and environmental enhancement techniques to control pollution from all sources, within such basin or portions thereof, including nonpoint sources, together with instream water quality improvement techniques.

(8) Section 105(c) (33 U.S.C. 1255(c)) authorizes grants for research and demonstration projects for prevention of pollution of any waters by industry including, but not limited to, the prevention, reduction, and elimination of the discharge of pollutants.

(9) Section 105(e)(1) (33 U.S.C. 1255(e)(1)) authorizes grants for research and demonstration projects with respect to new and improved methods of preventing, reducing, and eliminating pollution from agriculture.

(10) Section 105(e)(2) (33 U.S.C. 1255(e)(2)) authorizes grants for demonstration projects with respect to new and improved methods of preventing, reducing, storing, collecting, treating, or otherwise eliminating pollution from sewage in rural and other areas where collection of sewage in conventional, communitywide sewage collection systems is impractical, uneconomical, or otherwise infeasible, or where soil conditions or other factors preclude the use of septic tank and drainage field systems.

(11) Section 107 (33 U.S.C. 1257) authorizes grants for projects to demonstrate comprehensive approaches to the elimination or control of acid or other mine water pollution resulting from active or abandoned mining operations and other environmental pollution affecting water quality within all or part of a watershed or river basin, including siltation from surface mining.

(12) Section 108 (33 U.S.C. 1258) authorizes grants for projects to demonstrate new methods and techniques, and to develop preliminary plans for the elimination or control of pollution within all or any part of the watersheds of the Great Lakes.

(13) Section 113 (33 U.S.C. 1263) authorizes grants for projects to demonstrate methods to provide for central community facilities for safe water and elimination or control of pollution in those native villages of Alaska without such facilities.

(c) The Public Health Service Act, as amended, 42 U.S.C. 241 *et seq.*

(1) Section 301 (42 U.S.C. 241, 242b, and 246) authorizes grants for research relating to the human and environmental effects of radiation.

(2) [Reserved]

(d) The Solid Waste Disposal Act, as amended, by the Resource Conservation and Recovery Act of 1976 (42 U.S.C. 6901 *et seq.*).

(1) Section 8001 (42 U.S.C. 6981) authorizes grants for research and demonstration projects relating to solid waste.

(2) Section 8004 (42 U.S.C. 6984) authorizes grants for demonstration of new or improved technologies for resource recovery.

(3) Section 8005 (42 U.S.C. 6985) authorizes grants to conduct special studies and demonstration projects on recovery of useful energy and materials.

(4) Section 8006 (42 U.S.C. 6986) authorizes grants for the demonstration of resource recovery system or for the construction of new or improved solid waste disposal facilities.

(e) The Federal Insecticide, Fungicide, and Rodenticide Act, as amended, Public Law 92–516.

(1) Section 20 authorizes grants for research in the pesticides areas with priority given to the development of biologically integrated alternatives for pest control.

(2) [Reserved]

(f) The Grant Act, 42 U.S.C. 1891 *et seq.*, authorizes grants for basic scientific research.

[38 FR 12784, May 15, 1973, as amended at 42 FR 56056, Oct. 20, 1977]

§ 40.115 Definitions.

The statutes identified in § 40.110 contain definitions which are not all repeated here. The following terms shall have the meaning set forth below:

[42 FR 56056, Oct. 20, 1977]

§ 40.115–1 Construction.

May include the preliminary planning to determine the economic and engineering feasibility of a facility, the engineering, architectural, legal, fiscal, and economic investigations and studies, surveys, designs, plans, working drawings, specifications, procedures, and other action necessary to the construction of a facility, the erection, acquisition, alteration, remodeling, improvement, or extension of a facility, and the inspection and supervision of the construction of a facility.

§ 40.115–2 Intermunicipal agency.

(a) Under the Clean Air Act, an agency of two or more municipalities located in the same State or in different States and having substantial powers or duties pertaining to the prevention and control of air pollution.

(b) Under the Resource Conservation and Recovery Act, an agency established by two or more municipalities with responsibility for planning or administration of solid waste.

(c) In all other cases, an agency of two or more municipalities having substantial powers or duties pertaining to the control of pollution.

[38 FR 12784, May 15, 1973, as amended at 42 FR 56056, Oct. 20, 1977]

§ 40.115–3 Interstate agency.

(a) Under the Clean Air Act, an agency established by two or more States, or by two or more municipalities located in different States, having substantial powers or duties pertaining to the prevention and control of air pollution.

(b) Under the Federal Water Pollution Control Act, an agency of two or more States established by or pursuant to an agreement or compact approved by the Congress or any other agency of two or more States, having substantial powers or duties pertaining to the control of pollution of waters.

(c) Under the Resource Conservation and Recovery Act, an agency of two or more municipalities in different States or an agency established by two or more States, with authority to provide for the disposal of solid wastes and serving two or more municipalities located in different States.

(d) In all other cases, an agency of two or more States having substantial powers or duties pertaining to the control of pollution.

[38 FR 12784, May 15, 1973, as amended at 42 FR 56056, Oct. 20, 1977]

§ 40.115–4 Municipality.

(a) Under the Federal Water Pollution Control Act, a city, town, borough, county, parish, district, association, or other public body created by or pursuant to State law, or an Indian tribe or an authorized Indian tribal organization, with jurisdiction over disposal of sewage, industrial wastes, or other wastes; or a designated and approved management agency under section 208 of the act.

(b) Under the Resource Conservation and Recovery Act, a city, town, borough, county, parish, district, or other public body created by or pursuant to State law, with responsibility for the planning or administration of solid waste management, or an Indian tribe or authorized tribal organization or Alaska Native village or organization, and any rural community or unincorporated town or village or any other public entity for which an application for assistance is made by a State or political subdivision thereof.

(c) In all other cases, a city, town, borough, county, parish, district, or other public body created by or pursuant to State law, or an Indian tribe or an authorized Indian tribal organization, having substantial powers or duties pertaining to the control of pollution.

[38 FR 12784, May 15, 1973, as amended at 42 FR 56056, Oct. 20, 1977]

§ 40.115–5 Person.

(a) Under the Federal Water Pollution Control Act, an individual, corporation, partnership, association, State, municipality, commission, or

political subdivision of a State, or any interstate body.

(b) Under the Resource Conservation and Recovery Act, an individual, trust, firm, joint stock company, corporation (including a government corporation), partnership, association, State, municipality, commission, political subdivision of a State, or any interstate body.

[38 FR 12784, May 15, 1973, as amended at 42 FR 56057, Oct. 20, 1977]

§ 40.115–6 State.

(a) Under the Federal Water Pollution Control Act, a State, the District of Columbia, the Commonwealth of Puerto Rico, the Virgin Islands, Guam, American Samoa, and the Trust Territory of the Pacific Islands.

(b) Under the Resource Conservation and Recovery Act, a State, the District of Columbia, the Commonwealth of Puerto Rico, the Virgin Islands, Guam, American Samoa, and the Commonwealth of the Northern Mariana Islands.

(c) In all other cases, a State, the District of Columbia, the Commonwealth of Puerto Rico, the Virgin Islands, Guam and American Samoa.

[42 FR 56057, Oct. 20, 1977]

§ 40.120 Publication of EPA research objectives.

The Office of Research and Development of EPA publishes a statement of research objectives and priorities annually in a document entitled ''Office of Research and Development—Program Guide.'' This document may be obtained from either the Office of Research and Development, RD–674, or the Grants Administration Division, PM–216, U.S. Environmental Protection Agency, Washington, DC 20460.

[42 FR 56057, Oct. 20, 1977]

§ 40.125 Grant limitations.

§ 40.125–1 Limitations on duration.

(a) No research or demonstration grant shall be approved for a budget period in excess of 2 years except demonstration grants involving construction.

(b) No research or demonstration grant shall be approved for a project period in excess of 5 years.

(c) The grant award official may extend the budget and project periods for up to an additional 12 months without additional grant funds, when such extensions are in the best interest of the Government.

[42 FR 56057, Oct. 20, 1977]

§ 40.125–2 Limitations on assistance.

In addition to the cost-sharing requirements pursuant to 40 CFR 30.720, research and demonstration grants shall be governed by the specific assistance limitations listed below:

(a) *Federal Water Pollution Control Act.* (1) Section 104(s)—no grant in any fiscal year may exceed $1 million.

(2) Sections 105 (a), (c) and 108—no grant may exceed 75 percent of the allowable actual project costs.

(b) *Clean Air Act.* (1) Section 104—no grant may exceed $1,500,000.

(2) [Reserved]

(c) *Resource Conservation and Recovery Act.* (1) Sections 8001, 8004, and 8005. The maximum practicable cost sharing is required.

(2) Section 8006. The Federal share for any grant for the demonstration of resource recovery systems shall not exceed 75 percent and is subject to the conditions contained in section 8006(b) of the Act. The Federal share for any grant for the construction of new or improved solid waste disposal facilities shall not exceed 50 percent in the case of a project serving an area which includes only one municipality and 75 percent in any other case, and is subject to the limitations contained in section 8006(c) of the Act. Not more than 15 percent of the total funds authorized to be appropriated for any fiscal year to carry out this section shall be awarded for projects in any one State.

[38 FR 12784, May 15, 1973, as amended at 42 FR 20083, May 8, 1977; 42 FR 56057, Oct. 20, 1977]

§ 40.130 Eligibility.

Except as otherwise provided below, grants for research and demonstration

projects may be awarded to any responsible applicant in accordance with 40 CFR 30.340:

(a) The Clean Air Act, as amended—public or nonprofit private agencies, institutions, organizations, and to individuals.

(b) Resource Conservation and Recovery Act.

(1) Section 8001, public authorities, agencies, and institutions; private agencies and institutions; and individuals.

(2) Sections 8004 and 8005, public agencies and authorities or private persons.

(3) Section 8006, State, municipal, interstate or intermunicipal agencies.

(4) No grant may be made under this Act to any private profit-making organization.

(c) The Federal Insecticide, Fungicide, and Rodenticide Act, as amended—other Federal agencies, universities, or others as may be necessary to carry out the purposes of the act.

(d) The Federal Water Pollution Control Act, as amended:

(1) Section 104(b)—State water pollution control agencies, interstate agencies, other public or nonprofit private agencies, institutions, organizations, and to individuals.

(2) Sections 104 (h) and (i)—public or private agencies and organizations and to individuals.

(3) Section 104(r)—colleges and universities.

(4) Section 104(s)—institutions of higher education.

(5) Sections 105 (a), (e)(2), and 107—State, municipal, interstate, and intermunicipal agencies.

(6) Section 195(b)—State or States or interstate agency.

(7) Sections 105 (c) and (e)(1)—persons.

(8) Section 108—State, political subdivision, interstate agency, or other public agency, or combination thereof.

(9) Section 113—only to the State of Alaska.

(e) The Public Health Service Act, as amended—only to nonprofit agencies, institutions, organizations, and to individuals.

[38 FR 12784, May 15, 1973, as amended at 40 FR 20083, May 8, 1975; 42 FR 56057, Oct. 20, 1977]

§ 40.135 Application.

§ 40.135–1 Preapplication coordination.

(a) *All applicants.* (1) Applicants for research and demonstration grants are encouraged to contact EPA for further information and assistance prior to submitting a formal application. The EPA regional office or the laboratory nearest the applicant will be able to provide such assistance or to refer the applicant to an appropriate EPA representative.

(2) Applicants shall prepare an environmental assessment of the proposed project where applicable, outlining the anticipated impact on the environment pursuant to 40 CFR part 6.

(b) Applications for grants for demonstration projects funded by the Office of Solid Waste will be solicited through the Department of Commerce Business Daily, and selections will be made on a competitive basis.

[38 FR 12784, May 15, 1973, as amended at 41 FR 20659, May 20, 1976; 42 FR 56057, Oct. 20, 1977; 48 FR 29302, June 24, 1983]

§ 40.135–2 Application requirements.

All applications for research and demonstration grants shall be submitted in an original and 8 copies to the Environmental Protection Agency, Grants Administration Division, Washington, DC 20460, in accordance with §§ 30.315 through 30.315–3.

(a) *Applications involving human subjects.* (1) Safeguarding the rights and welfare of human subjects involved in projects supported by EPA grants is the responsibility of the institution which receives or is accountable to EPA for the funds awarded for the support of the project.

(2) Institutions must submit to EPA, for review, approval, and official acceptance, a written assurance of its compliance with guidelines established by Department of Health, Education, and Welfare concerning protection of human subjects. However, institutions which have submitted and have had accepted, general assurance to DHEW under these guidelines will be considered as being in compliance with this requirement. These guidelines are provided in DHEW Publication No. (NIH) 72–102, the ''Institutional Guide to DHEW Policy on Protection of Human

Subjects.'' Copies of this publication are available from the Superintendent of Documents, U.S. Government Printing Office, Washington, DC 20420.

(3) Applicants must provide with each proposal involving human subjects a certification that it has been or will be reviewed in accordance with the institution's assurance. This certification must be renewed annually on the basis of continuing review of the supported project.

(b) *Applications involving laboratory animals.* Each application for a project involving the use of warmblooded animals shall include a written assurance that the applicant has registered with the Department of Agriculture and is in compliance with the rules, regulations, and standards enunciated in the Animal Welfare Act, Public Law 89–554, as amended.

(c) *Notice of research project* (*NRP*). Each application for research must include a summary (NRP) of proposed work (200 words or less) incorporating objectives, approach and current plans and/or progress. Upon approval of an application, summaries are forwarded to the Smithsonian Science Information Exchange. Summaries of work in progress are exchanged with government and private agencies supporting research and are forwarded to investigators who request such information.

(d) *Federal Water Pollution Control Act.* (1) All applications for grants under section 105(a) must have been approved by the appropriate State water pollution control agency or agencies.

(2) All applications for grants under section 107, where the proposed project will be located in the Appalachian region, shall have been coordinated with the Appalachian Regional Commission for determination that such demonstration project is consistent with the objectives of the Appalachian Regional Development Act of 1965, as amended.

(e) *Intergovernmental review.* EPA will not award funds under this subpart without review and consultation, if applicable, in accordance with the requirements of Executive Order 12372, as implemented in 40 CFR part 29 of this chapter.

[38 FR 12784, May 15, 1973, as amended at 40 FR 20083, May 8, 1975; 42 FR 56057, Oct. 20, 1977; 48 FR 29302, June 24, 1983]

§ 40.140 Criteria for award.

In determining the desirability and extent of funding for a project and the relative merit of an application, consideration will be given to the following criteria:

§ 40.140–1 All applications.

(a) The relevancy of the proposed project to the objectives of the EPA research and demonstration program;

(b) The availability of funds within EPA;

(c) The technical feasibility of the project;

(d) The seriousness, extent, and urgency of the environmental problems toward which the project is directed;

(e) The anticipated public benefits to be derived from the project in relation to the costs of the project;

(f) The competency of the applicant's staff and the adequacy of the applicant's facilities and available resources;

(g) The degree to which the project can be expected to produce results that will have general application to pollution control problems nationwide;

(h) Whether the project is consistent with existing plans or ongoing planning for the project area at the State, regional, and local levels;

(i) The existence and extent of local public support for the project;

(j) Whether the proposed project is environmentally sound;

(k) Proposed cost sharing.

§ 40.140–2 [Reserved]

§ 40.140–3 Federal Water Pollution Control Act.

(a) All applications for grants under section 105(c) must provide evidence that the proposed project will contribute to the development or demonstration of a new or improved method of treating industrial wastes or otherwise preventing pollution by industry, which method shall have industrywide application;

(b) All applications for grants under section 113 must include provisions for community safe water supply systems, toilets, bathing and laundry facilities, sewage disposal facilities and programs relating to health and hygiene. Such projects must also be for the further purpose of developing preliminary plans for providing such safe water and such elimination or control of water pollution for all native villages in the State of Alaska.

§ 40.145 Supplemental grant conditions.

In addition to the EPA general grant conditions (40 CFR part 30, subpart C), all grants are awarded subject to the following requirements:

(a) The project will be conducted in an environmentally sound manner.

(b) In addition to the notification of project changes required pursuant to 40 CFR 30.900, prior written approval by the grants officer is required for project changes which may (1) alter the approved scope of the project, (2) substantially alter the design of the project, or (3) increase the amount of Federal funds needed to complete the project. No approval or disapproval of a project change pursuant to 40 CFR 30.900 or this section shall commit or obligate the United States to an increase in the amount of the grant or payments thereunder, but shall not preclude submission or consideration of a request for a grant amendment pursuant to 40 CFR 30.900–1.

[38 FR 12784, May 15, 1973, as amended at 40 FR 20083, May 8, 1975]

§ 40.145–1 Resource Conservation and Recovery Act.

Programs for which a Federal grant is awarded by the Environmental Protection Agency to a State, municipal, interstate or intermunicipal agency, or to any public authority, agency or institution, under the Resource Conservation and Recovery Act, shall be the subject of public participation consistent with part 249 of this chapter.

[42 FR 56057, Oct. 20, 1977]

§ 40.145–2 Federal Water Pollution Control Act.

(a) No person in the United States shall on the ground of sex be excluded from participation in, be denied the benefits of, or be subjected to discrimination under any program or activity receiving assistance under the Act.

(b) Grants under section 107 are awarded subject to the conditions—(1) that the State shall acquire any land or interests therein necessary for such project to assure the elimination or control of acid or other mine water pollution; and (2) that the State shall provide legal and practical protection to the project area to insure against any activities which will cause future acid or other mine water pollution.

§ 40.145–3 Projects involving construction.

Research and demonstration grants for projects involving construction shall be subject to the following conditions:

(a) The applicant will demonstrate to the satisfaction of the grants officer that he has or will have a fee simple or such other estate or interest in the site of the project, and rights of access, as the grants officer finds sufficient to assure undisturbed use and possession for the purpose of construction and operation for the estimated life of the project; and in the case of projects serving more than one municipality, that the participating communities have such interests or rights as the grants officer finds sufficient to assure their undisturbed utilization of the project for the estimated life of the project.

(b) Invitations for bids or requests for proposals shall be based upon a clear and accurate description of the technical requirements for the material, product, or service to be procured. Such description shall not, in competitive procurements, contain features which unduly restrict competition. ''Brand name or equal'' description may be used as a means to define the performance or other salient requirements of a procurement, and when so used the specific features of the named

brand which must be met by offerors should be clearly specified.

(c) Positive efforts shall be made by the grantees to utilize small business and minority-owned business sources of supplies and services.

(d) Subagreements for construction work may be negotiated when advertising for competitive bids is not feasible; however, the grantee must adequately demonstrate its need to contract with a single or sole source. All such subagreements are subject to prior approval by the grants officer.

(e) Construction work will be performed by the fixed-price (lump sum) or fixed-rate (unit price) method, or a combination of these two methods, unless the grants officer gives advance written approval to use some other method of contracting. The cost-plus-a-percentage-of-cost method of contracting shall not be used. Adequate methods of advertising for and obtaining competitive sealed bids will be employed prior to award of the construction contract. The award of the contract will be made to the responsible bidder submitting the lowest responsive bid, which shall be determined without regard to State or local law whereby preference is given on factors other than the specification requirements and the amount of bid. The grantee must promptly transmit to the grants officer copies of bid protests, decisions on such protests, and related correspondence. The grants officer will cause appropriate review of grantee procurement methods to be made.

(f) On construction contracts exceeding $100,000, each bidder must furnish a bid guarantee equivalent to 5 percent of the bid price. In addition, the contractor awarded the contract must furnish performance and payment bonds, each of which shall be in an amount not less than 100 percent of the contract price. Construction contracts less than $100,000 shall follow the State or local requirements relating to bid guarantees, performance bonds, and payment bonds.

(g) The construction of the project, including the letting of contracts in connection therewith, shall conform to the applicable requirements of State, territorial, and local laws and ordinances to the extent that such requirements do not conflict with Federal laws.

(h) The grantee will provide and maintain competent and adequate engineering supervision and inspection for the project to insure that the construction conforms with the approved plans and specifications.

(i) Any construction contract must provide that representatives of the Environmental Protection Agency and the State, as appropriate, will have access to the work whenever it is in preparation or progress and that the contractor will provide proper facilities for such access and inspection. The contract must also provide that the grants officer, the Comptroller General of the United States, or any authorized representative shall have access to any books, documents, papers, and records of the contractor which are pertinent to the project for the purpose of making audit, examination, excerpts, and transcriptions thereof.

(j) The grantee agrees to construct the project or cause it to be constructed in accordance with the application, plans and specifications, and subagreements approved by EPA in the grant agreement or amendments.

(k) In addition to the notification of project changes pursuant to 40 CFR 30.900, a copy of any construction contract or modifications thereof, and of revisions to plans and specifications must be submitted to the grants officer.

[38 FR 12784, May 15, 1973, as amended at 40 FR 20083, May 8, 1975]

§ 40.150 Evaluation of applications.

Every application for a research or demonstration grant will be evaluated by appropriate EPA staff in terms of relevancy and the applicable criteria set forth in § 40.140. Only applications considered relevant to EPA research and demonstration objectives will receive further consideration and be subjected to additional review. Relevancy will be measured by program needs and priorities as defined in the Agency's current planned objectives. Relevancy, coupled with the results of technical review, will provide the basis for funding recommendations.

(a) *New applications.* Applications considered relevant to EPA research

and demonstration objectives will be reviewed for technical merit by at least one reviewer within EPA and at least two reviewers outside EPA. Review by a National Advisory Council is statutorily required for radiation grants.

(b) *Continuation applications.* Continuation applications will be reviewed by appropriate EPA staff only. Recommendations for continuation of funding will be based on progress toward the accomplishment of the goals set forth for the project and continued Agency needs and priorities.

§ 40.155 Availability of information.

(a) The availability to the public of information provided to, or otherwise obtained by, the Administrator under this part shall be governed by part 2 of this chapter.

(b) An assertion of entitlement to confidential treatment of part or all of the information in an application may be made using the procedure described in § 30.235(b). See also §§ 2.203 and 2.204 of this chapter.

(c) All information and data contained in the grant application will be subject to external review unless deviation is approved for good cause pursuant to 40 CFR 30.1000.

[38 FR 12784, May 15, 1973, as amended at 40 FR 20083, May 8, 1975; 41 FR 36918, Sept. 1, 1976]

§ 40.160 Reports.

§ 40.160–1 Progress reports.

The grant agreement will normally require the submission of a brief progress report after the end of each quarter of the budget period. A monthly progress report may be required for some demonstration projects, if set forth in the grant agreement. Progress reports should fully describe in chart or narrative format the progress achieved in relation to the approved schedule and project milestones. Special problems or delays encountered must be explained. A summary progress report covering all work on the project to date is required to be included with applications for continuation grants (see § 40.165b). This report may be submitted one quarter prior to the end of the budget period.

§ 40.160–2 Financial status report.

A financial status report must be prepared and submitted within 90 days after completion of the budget and project periods in accordance with § 30.635–3.

[42 FR 56057, Oct. 20, 1977]

§ 40.160–3 Reporting of inventions.

As provided in appendix B of 40 CFR part 30, immediate and full reporting of all inventions to the Environmental Protection Agency is required. In addition:

(a) An annual invention statement is required with each continuation application.

(b) A final invention report is required within 90 days after completion of the project period.

(c) When a principal investigator changes institutions or ceases to direct a project, an invention statement must be promptly submitted with a listing of all inventions during his administration of the grant.

[38 FR 12784, May 15, 1973, as amended at 40 FR 20083, May 8, 1975]

§ 40.160–4 Equipment report.

At the completion or termination of a project, the grantee will submit a listing of all items of equipment acquired with grant funds with an acquisition cost of $300 or more and having a useful life of more than 1 year.

§ 40.160–5 Final report.

The grantee shall submit a draft of the final report for review no later than 90 days prior to the end of the approved project period. The report shall document project activities over the entire period of grant support and shall describe the grantee's achievements with respect to stated project purposes and objectives. The report shall set forth in complete detail all technical aspects of the projects, both negative and positive, grantee's findings, conclusions, and results, including, as applicable, an evaluation of the technical effectiveness and economic feasibility of the methods or techniques investigated or demonstrated. The final report shall include EPA comment when required by the grants officer. Prior to

the end of the project period, one reproducible copy suitable for printing and such other copies as may be stipulated in the grant agreement shall be transmitted to the grants officer.

§ 40.165 Continuation grants.

To be eligible for a continuation grant within the approved project period, the grantee must:

(a) Have demonstrated satisfactory performance during all previous budget periods; and

(b) Submit no later than 90 days prior to the end of the budget period a continuation application which includes a detailed summary progress report, an estimated financial statement for the current budget period, a budget for the new budget period; and an updated work plan revised to account for actual progress accomplished during the current budget period.

PART 45—TRAINING ASSISTANCE

Sec.
45.100 Purpose and scope.
45.105 Authority.
45.110 Objectives.
45.115 Definitions.
45.120 Applicant eligibility.
45.125 Application requirements.
45.130 Evaluation of applications.
45.135 Supplemental conditions.
45.140 Budget and project period.
45.145 Allocability and allowability of costs.
45.150 Reports.
45.155 Continuation assistance.

APPENDIX A TO PART 45—ENVIRONMENTAL PROTECTION AGENCY TRAINING PROGRAMS

AUTHORITY: Sec. 103 of the Clean Air Act, as amended (42 U.S.C. 7403), secs. 104(g), 109, and 111 of the Clean Water Act, as amended (33 U.S.C. 1254(g), 1259, and 1261), secs. 7007 and 8001 of the Solid Waste Disposal Act, as amended (42 U.S.C. 6977 and 6981); sec. 1442 of the Safe Drinking Water Act, as amended (42 U.S.C. 300j–1).

SOURCE: 49 FR 41004, Oct. 18, 1984, unless otherwise noted.

§ 45.100 Purpose and scope.

This part establishes the policies and procedures for the award of training assistance by the Environmental Protection Agency (EPA). The provisions of this part supplement EPA's ''General Regulation for Assistance Programs,'' 40 CFR part 30.

§ 45.105 Authority.

The EPA is authorized to award training assistance under the following statutes:

(a) Section 103 of the Clean Air Act, as amended (42 U.S.C. 7403);

(b) Sections 104(g), 109, and 111 of the Clean Water Act, as amended (33 U.S.C. 1254(g), 1259, and 1261);

(c) Sections 7007 and 8001 of the Solid Waste Disposal Act, as amended (42 U.S.C. 6977 and 6981);

(d) Section 1442 of the Safe Drinking Water Act, as amended (42 U.S.C. 300j–1).

§ 45.110 Objectives.

Assistance agreements are awarded under this part to support students through traineeships for occupational and professional training, and to develop career-oriented personnel qualified to work in occupations involving environmental protection and pollution abatement and control. Training assistance is available to:

(a) Assist in developing, expanding, planning, implementing, and improving environmental training;

(b) Increase the number of trained pollution control and abatement personnel;

(c) Upgrade the level of occupational and professional training among State and local environmental control personnel;

(d) Train people to train others in occupations involving pollution abatement and control; and

(e) Bring new people into the environmental control field.

§ 45.115 Definitions.

The following definitions supplement the definitions in 40 CFR 30.200.

Stipend. Supplemental financial assistance, other than tuition and fees, paid directly to the trainee by the recipient organization.

Trainee. A student selected by the recipient organization who receives support to meet the objectives in § 45.110.

§ 45.120 Applicant eligibility.

Institutions, organizations, and individuals are eligible for EPA training awards as follows:

(a) *Clean Air Act.* Section 103(b)—Air pollution control agencies, public and

nonprofit private agencies, institutions, organizations, and individuals. No award may be made under this Act to any private, profitmaking organization.

(b) *Clean Water Act.* (1) Section 104(b)(3)—State water pollution control agencies, interstate agencies, other public or nonprofit private agencies, institutions, organizations, and individuals. No award may be made to any private, profitmaking organization.

(2) Section 104(g)(3)(A)—Public or private agencies and institutions, and individuals.

(3) Sections 104(g)(1) and 104(g)(3)(C)—State and interstate agencies, municipalities, educational institutions and other organizations and individuals.

(4) Sections 109, 110, and 111—Institutions of higher education, or combinations of such institutions.

(c) *Solid Waste Disposal Act.* (1) Section 8001(a)—Public or private authorities, agencies, and institutions and individuals. No award may be made to any private, profitmaking organization.

(2) Section 7007(a)—State or interstate agencies, municipalities, educational institutions, and other organizations.

(d) *Safe Drinking Water Act.* Sections 1442(b) and 1442(d)—Public agencies, educational institutions, and other organizations. No awards may be made to profitmaking agencies or institutions.

§ 45.125 Application requirements.

Applicants must submit their requests for assistance on EPA Form 5700–12, ''Application for Federal Assistance.'' Applicants must submit the original and two copies of the application to EPA. If the assistance agreement is to be awarded by EPA Headquarters, the applicant must send the application to the Environmental Protection Agency, Grants Administration Division, Grants Operation Branch (PM–216), 401 M Street SW., Washington, DC 20460. If the assistance agreement is to be awarded by an EPA Regional Office, the applicant must send the application to the appropriate Regional Office.

(Approved by the Office of Management and Budget under control number 2010–0004)

§ 45.130 Evaluation of applications.

(a) Consistent with 40 CFR 30.301, the appropriate EPA program office staff will review training applications in accordance with the following criteria:

(1) Relevance of proposal to Agency objectives, priorities, achievement of national goals and technical merit;

(2) Competency of the proposed staff in relation to the type of project proposed;

(3) Feasibility of the proposal;

(4) Adequacy of the applicant's resources available for the project;

(5) Amount of funds necessary for the completion of the project;

(b) In addition, awards under section 104(g)(1) of the Clean Water Act, are subject to the following criteria:

(1) Assessment of need for training in a State or municipality based on problems with existing wastewater treatment plants, such as violation of discharge permit conditions, and faulty or improper operation or maintenance.

(2) Need for operating training based on the number of wastewater treatment construction grants in the State.

§ 45.135 Supplemental conditions.

Training awards are subject to the following conditions:

(a) Trainees must be citizens of the United States, its territories, or possessions, or lawfully admitted to the United States for permanent residence.

(b) Recipients shall not require the performance of personal services by individuals receiving training as a condition for assistance.

(c) Trainees are entitled to the normal student holidays observed by an academic institution, or the holiday and vacation schedule applicable to all trainees at a nonacademic institution.

(d) Training awards may include a provision to pay stipends to trainees. Stipends must be paid under section 111 of the Clean Water Act consistent with prevailing practices under comparable federally supported programs.

(e) Training awards under section 111 of the Clean Water Act are subject to the following conditions:

(1) Recipients must obtain the following agreement in writing from persons awarded scholarships for undergraduate study of the operation and maintenance of treatment works:

I agree to enter and remain in an occupation involving the design, operation, or maintenance of wastewater treatment works for a period of two years after the satisfactory completion of my studies under this program. I understand that if I fail to perform this obligation I may be required to repay the amount of my scholarship.

(2) Recipients must take such action as may be reasonably required to enforce the condition in paragraph (e)(1) of this section. Recipients shall credit or pay EPA for any repayments.

§ 45.140 Budget and project period.

The budget and project periods for training awards may not exceed three years.

§ 45.145 Allocability and allowability of costs.

(a) Allocability and allowability of costs will be determined in accordance with 40 CFR 30.410.

(b) Costs incurred for the purchase of land or the construction of buildings are not allowable.

§ 45.150 Reports.

(a) Recipients must submit the reports required in 40 CFR 30.505.

(b) A draft of the final project report is required 90 days before the end of the project period. The recipient shall prepare the final projects report in accordance with the project officer's instructions, and submit the final project report within 30 days after the end of the project period.

§ 45.155 Continuation assistance.

To be eligible for continuation assistance, the recipient must:

(a) Demonstrate satisfactory performance during all previous budget periods;

(b) Include in the application a detailed progress report showing the progress achieved and explain special problems or delays, a budget for the new budget period, and a detailed work plan for the new budget period; and

(c) Submit a preliminary financial statement for the current budget period that includes estimates of the amount the recipient expects to spend by the end of the current budget period and the amount of any uncommitted funds which the recipient proposes to carry over beyond the term of the current budget period.

APPENDIX A TO PART 45—ENVIRONMENTAL PROTECTION AGENCY TRAINING PROGRAMS

	Administering office	
	Headquarters	Regional
Office of Air, Noise, and Radiation:		
Air Pollution Control Manpower Training Grants.	X	
Air Pollution Control—Technical Training.	X	
Office of Water:		
Water Pollution Control—Professional Training Grants.	X	X.
Safe Drinking Water Professional Training Grants.	X	
Safe Drinking Water—Occupational Training.	X	
Office of Solid Waste and Emergency Response: Hazardous Waste Training.	X	

PART 46—FELLOWSHIPS

Sec.
46.100 Purpose.
46.105 Authority.
46.110 Objectives.
46.115 Types of fellowships.
46.120 Definitions.
46.125 Benefits.
46.130 Eligibility.
46.135 Submission of applications.
46.140 Evaluation of applications.
46.145 Fellowship agreement.
46.150 Fellowship agreement amendment.
46.155 Supplemental conditions.
46.160 Acceptance of fellowship award.
46.165 Duration of fellowship.
46.170 Initiation of studies.
46.175 Completion of studies.
46.180 Payment.

APPENDIX A TO PART 46—ENVIRONMENTAL PROTECTION AGENCY FELLOWSHIP PROGRAMS

AUTHORITY: Sec. 103(b)(5) of the Clean Air Act as amended, (42 U.S.C. 7403(b)(5)); secs. 104(b)(5) and (g)(3)(B) of the Clean Water Act, as amended (33 U.S.C. 1254(b)(5) and (g)(3)(B)); sec. 1442(d)(2) of the Safe Drinking Water Act, as amended, (42 U.S.C. 300j-1(d)(2)); and sec. 8001 of the Solid Waste Disposal Act, as amended (42 U.S.C. 6981).

SOURCE: 49 FR 41006, Oct. 18, 1984, unless otherwise noted.

§ 46.100 Purpose.

This part establishes the policies and procedures for all Environmental Protection Agency (EPA) fellowships and

supplements the requirements in 40 CFR part 30, ''General Regulation for Assistance Programs.''

§46.105 Authority.

The EPA is authorized to award fellowships under the following statutes:

(a) Section 103(b)(5) of the Clean Air Act as amended (42 U.S.C. 7403(b)(5));

(b) Section 104(b)(5) and (g)(3)(B) of the Clean Air Act, as amended (33 U.S.C. 1254(b)(5) and (g)(3)(B);

(c) Section 1442(d)(2) of the Safe Drinking Water Act, as amended (42 U.S.C. 300j-1(d)(2); and

(d) Section 8001 of the Solid Waste Disposal Act as amended (42 U.S.C. 6981).

§46.110 Objectives.

Fellowships awarded under this part are intended to enhance the capability of State or local agencies responsible for environmental pollution control or other agencies with similar pollution control responsibilities; provide educational renewal opportunities for their career oriented personnel to achieve additional knowledge through academic professional training; and to bring new people into the environmental control field.

§46.115 Types of fellowships.

(a) *Local agency fellowships* are awarded to current or prospective employees of a local environmental pollution control or regulatory agency for academic professional training in pollution control science, engineering, and technology and in specialty areas supportive of pollution abatement and control efforts.

(b) *State agency fellowships* are awarded to current or prospective employees of a State environmental pollution control or regulatory agency to provide academic professional training in the areas of pollution abatement and control.

(c) *Special fellowships* are awarded to individuals for education and training in pollution control science, engineering, and technology and in specialty areas supportive of pollution abatement and control efforts.

§46.120 Definitions.

The following definitions supplement the definitions in 40 CFR 30.200.

Full-time fellow. An individual enrolled in an academic educational program directly related to pollution abatement and control, and taking a minumum of 30 credit hours or an academic workload otherwise defined by the institution as a full-time curriculum for a school year. The fellow need not be pursuing a degree.

Part-time fellow. An individual enrolled in an academic educational program directly related to pollution abatement and control and taking at least 6 credit hours but less than 30 credit hours per school year, or an academic workload otherwise defined by the institution as less than a full-time curriculum. The fellow need not be pursuing a degree.

Special fellow. An individual enrolled in an educational program relating to environmental sciences, engineering, professional schools, and allied sciences.

Stipend. Supplemental financial assistance other than tuition, fees, and book allowance, paid directly to the fellow.

§46.125 Benefits.

(a) Recipients of assistance under this part shall be entitled to tuition and fees. Recipients may receive an allowance for books and supplies up to a maximum of $750 for the school year for a full-time fellow, and are entitled to the normal student holidays observed by the academic institution.

(b) Recipients of a fellowships may receive a stipend at a level determined by the EPA program office based on EPA's needs and resources, and on the student's course load.

(c) Part-time fellows will not be paid more than the maximum amount paid to an equivalent full-time fellow under the same fellowships program.

§46.130 Eligibility.

(a) All applicants for fellowships under this part must be:

(1) Citizens of the United States, its territories, or possessions, or lawfully admitted to the United States for permanent residence; and

(2) Accepted by an accredited educational institutional for full-time or part-time enrollment for academic credit in an educational program directly related to pollution abatement and control.

(b) Applicants for State or local agency fellowships must be current or prospective employees of a State or local agency with responsibilities for environmental pollution control, and must be recommended by the administrator, or designee, of the State or local agency. The administrator, or designee, will recommend applicants based on the State or local need for academic professional training which will enhance the capability of the State or local agency.

§ 46.135 Submission of applications.

(a) Applicants must submit their requests for assistance on EPA Form 5770–2, ''Fellowship Application.'' Applicants must submit the original and two copies of the application and undergraduate or graduate transcripts, as appropriate, to the Grants Administration Division, Grants Operation Branch (PM–216), Environmental Protection Agency, 401 M Street SW., Washington, DC, 20460.

(b) The applicant must submit documentation to show compliance with the eligibility requirements in § 46.130, and any additional information required by the award official. Instructions for filing are contained in the application kit.

(Information collection requirements in paragraph (a) were approved by the Office of Management and Budget under control number 2010–0004)

§ 46.140 Evaluation of applications.

(a) EPA will evaluate fellowship applications based upon:

(1) Their relevance to EPA's program needs;

(2) The availability of funds;

(3) EPA's priorities;

(4) Appropriateness of the fellow's proposed course of study; and

(5) Evaluation of the applicant in terms of potential for study, as evidenced by academic record, letters of reference, training plans; and any other available information.

§ 46.145 Fellowship agreement.

(a) The fellowship agreement is the written agreement, including amendments, between EPA and a fellow. The agreement, EPA Form 5770–8, ''Fellowship Agreement,'' will state the terms and conditions governing the fellowship.

(b) EPA will not participate in costs incurred by the fellow before both the award official and the fellow sign the agreement.

(c) The fellow must use the funds for the purposes stated in the fellowship agreement. If the fellow fails to comply with the terms and conditions of the award, the award official may apply the sanctions in 40 CFR part 30, subpart I.

(Information collection requirements in paragraph (a) were approved by the Office of Management and Budget under control number 2010–0004)

§ 46.150 Fellowship agreement amendment.

(a) The fellow must receive a formal amendment before implementing:

(1) Changes in the objective of the agreement;

(2) Changes in the assistance amount;

(3) Substantial changes within the scope of the agreement; or

(4) Changes in the project period.

(b) Fellows must submit a completed EPA Form 5770–6, ''Fellowship Amendment'' when requesting an amendment to the fellowship agreement.

(c) Minor changes in the agreement that are consistent with the objective of the agreement and within the scope of the agreement do not require a formal amendment before the fellow implements the change. However, such changes do not obligate EPA to provide Federal funds for any costs incurred by the fellow in excess of the assistance amount unless the award official approves the change in advance under § 46.150(a). The fellow must inform the EPA project officer in writing before implementing minor changes.

(Information collection requirements in paragraph (b) were approved by the Office of Management and Budget under control number 2010–0004)

§ 46.155 Supplemental conditions.

Recipients of a State or local fellowship receiving financial assistance under section 1442(d)(2) of the Safe Drinking Water Act, as amended; sections 104(b)(5) and (g)(3)(B) of the Clean Water Act as amended; and section 8001 of the Solid Waste Disposal Act must agree to remain in the employment of the State or local agency that recommended the recipient for an EPA fellowship for twice the period of the fellowship. If the recipient fails to perform this obligation the recipient may be required to repay the amount of the EPA fellowship.

§ 46.160 Acceptance of fellowship award.

The applicant accepts the fellowship by signing and returning the fellowship agreement to the EPA award official within three weeks after receipt, or within any extension of such time that may be permitted by the EPA award official. If the applicant does not sign and return the agreement to the award official or request an extension of the acceptance time within three calendar weeks after receiving the agreement, the offer is null and void.

§ 46.165 Duration of fellowship.

(a) Full-time fellowships will not exceed one year.

(b) Part-time fellowships will not exceed three years.

§ 46.170 Initiation of studies.

(a) The fellow must submit EPA 5770–7 ''Fellowship Activation Notice'' when they start their course of studies.

(b) If the EPA Grants Administration Division has not received the signed Fellowship Activation Notice within six months following the date of the award, EPA may terminate the fellowship.

(Information collection requirements in paragraph (a) were approved by the Office of Management and Budget under control number 2010–0004)

§ 46.175 Completion of studies.

Fellows must submit EPA Form 5770–9 ''EPA Fellowship Termination Notice,'' when the fellow completes the course of study.

(Approved by the Office of Management and Budget under control number 2010–0004)

§ 46.180 Payment.

(a) EPA will pay stipends directly to the fellow on a monthly basis or any other basis approved by the Project Officer, only after EPA has received the signed EPA Form 5770–7, ''Fellowship Activation Notice.''

(b) EPA will pay the book allowance directly to the fellow only after EPA receives the signed EPA Form 5770–7.

(c) EPA will pay tuition and fees in a lump payment directly to the sponsoring institution only after EPA has received the signed EPA Form 5770–7.

(Information collection requirements in paragraph (a) were approved by the Office of Management and Budget under control number 2010–0004)

APPENDIX A TO PART 46—ENVIRONMENTAL PROTECTION AGENCY FELLOWSHIP PROGRAMS

	Administering office	
	Headquarters	Regional
Office of Air, Noise, and Radiation: Air Pollution Control Fellowships.	X	
Office of Water: Water Pollution Control Fellowships.	X	
Safe Drinking Water Fellowships.	X	
Office of Research and Development: Interdisciplinary Fellowships.	X	
Office of Solid Waste and Emergency Response: Hazardous Waste Fellowships.	X	

PART 47—NATIONAL ENVIRONMENTAL EDUCATION ACT GRANTS

Sec.
47.100 Purpose and scope.
47.105 Definitions.
47.110 Eligible applicants.
47.115 Award amount and matching requirements.
47.120 Solicitation notice and proposal procedures.
47.125 Eligible and priority projects and activities.
47.130 Performance of grant.
47.135 Disputes.

AUTHORITY: 20 U.S.C. 5505.

SOURCE: 57 FR 8390, Mar. 9, 1992, unless otherwise noted.

§ 47.100 Purpose and scope.

This regulation codifies policy and procedures for the award of grants or cooperative agreements under section 6 of the NEEA. Specifically, this regulation defines eligible applicants, eligible activities, EPA priorities for selecting recipients, funding limits, and matching requirements. Projects funded under this regulation are also subject to the Code of Federal Regulations (40 CFR) part 31 for State and local recipients, and part 30 for other than State and local recipients. Those regulations contain Federal audit and other general administrative requirements. This regulation does not apply to the programs implemented under sections 5 and 7 of the NEEA.

§ 47.105 Definitions.

(a) *Environmental education* and *environmental education and training* mean educational activities and training activities involving elementary, secondary, and postsecondary students, as such terms are defined in the State in which they reside, and environmental education personnel, but does not include technical training activities directed toward environmental management professionals or activities primarily directed toward the support of noneducational research and development;

(b) *Federal agency* or *agency of the United States* means any department, agency or other instrumentality of the Federal Government, any independent agency or establishment of the Federal Government including any Government corporation;

(c) *Local education agency* means any education agency as defined in section 198 of the Elementary and Secondary Education Act of 1965 (20 U.S.C. 3381) and shall include any tribal education agency, as defined in § 47.105(f);

(d) *Not-for-profit* organization means an organization, association, or institution described in section 501(c)(3) of the Internal Revenue Code of 1986, which is exempt from taxation pursuant to the provisions of section 501(a) of such Code;

(e) *Noncommercial education broadcasting entities* means any noncommercial educational broadcasting station (and/or its legal nonprofit affiliates) as defined and licensed by the Federal Communications Commission;

(f) *Tribal education agency* means a school or community college which is controlled by an Indian tribe, band, or nation, including any Alaska Native village, which is recognized as eligible for special programs and services provided by the United States to Indians because of their status as Indians and which is not administered by the Bureau of Indian Affairs;

(g) Refer to 40 CFR parts 30 and 31 for definitions for budget period, project period, continuation award, cooperative agreement, grant agreement, and other Federal assistance terms.

§ 47.110 Eligible applicants.

Any local education agency (including any tribal education agency), college or university, State education agency or environmental agency, not-for-profit organization, or noncommercial educational broadcasting entity may submit an application to the Administrator in response to the solicitations described in § 47.120.

§ 47.115 Award amount and matching requirements.

(a) Individual awards shall not exceed $250,000, and 25 percent of all funds obligated under this section in a fiscal year shall be for individual awards of not more than $5,000.

(b) The Federal share shall not exceed 75 percent of the total project costs. The non-Federal share of project costs may be provided by in-kind contributions and other noncash support. In cases where the EPA determines that a proposed project merits support and cannot be undertaken without a higher rate of Federal support, the EPA may approve awards with a matching requirement other than that specified in this paragraph, including full Federal funding.

§ 47.120 Solicitation notice and proposal procedures.

Each fiscal year the Administrator shall publish a solicitation for environmental education grant proposals. The

solicitation notice shall prescribe the information to be included in the proposal and other information sufficient to permit EPA to assess the project.

§47.125 Eligible and priority projects and activities.

(a) Activities eligible for funding shall include, but not be limited to, environmental education and training programs for:

(1) Design, demonstration, or dissemination of environmental curricula, including development of educational tools and materials;

(2) Design and demonstration of field methods, practices, and techniques, including assessment of environmental and ecological conditions and analysis of environmental pollution problems;

(3) Projects to understand and assess a specific environmental issue or a specific environmental problem;

(4) Provision of training or related education for teachers, faculty, or related personnel in a specific geographic area or region; and

(5) Design and demonstration of projects to foster international cooperation in addressing environmental issues and problems involving the United States and Canada or Mexico.

(b) EPA shall give priority to those proposals which will develop:

(1) A new or significantly improved environmental education practice, method, or technique;

(2) An environmental education practice, method, or technique which may have wide application;

(3) An environmental education practice, method, or technique which addresses a skill or scientific field identified as a priority in the report which will be developed within two years of enactment pursuant to section 9(d) of the Act; and

(4) An environmental education practice, method, or technique which addresses an environmental issue which, in the judgment of EPA, is of a high priority.

§47.130 Performance of grant.

(a) Each project shall be performed by the recipient, or by a person satisfactory to the recipient and to the EPA. Workplans shall accompany all applications, shall identify who will be performing activities, and shall be approved by EPA prior to funding.

(b) Budget periods normally will not exceed one year. Project periods may be longer, and additional funding may be awarded for continuations.

(c) Procurement procedures, which are found in 40 CFR part 33 for all recipients other than State and local governments. Procurement procedures for State and local governments are described in 40 CFR part 31. These procedures include provisions for small purchase procedures.

§47.135 Disputes.

Disputes arising under these grants shall be governed by 40 CFR 30.1200 for recipients other than State and local governments and 40 CFR 31.70 for State and local governments.

SUBCHAPTER C—AIR PROGRAMS

PART 50—NATIONAL PRIMARY AND SECONDARY AMBIENT AIR QUALITY STANDARDS

Sec.
50.1 Definitions.
50.2 Scope.
50.3 Reference conditions.
50.4 National primary ambient air quality standards for sulfur oxides (sulfur dioxide).
50.5 National secondary ambient air quality standard for sulfur oxides (sulfur dioxide).
50.6 National primary and secondary ambient air quality standards for particulate matter.
50.7 [Reserved]
50.8 National primary ambient air quality standards for carbon monoxide.
50.9 National primary and secondary ambient air quality standards for ozone.
50.10 [Reserved]
50.11 National primary and secondary ambient air quality standard for nitrogen dioxide.
50.12 National primary and secondary ambient air quality standards for lead.

APPENDICES TO PART 50

APPENDIX A—REFERENCE METHOD FOR THE DETERMINATION OF SULFUR DIOXIDE IN THE ATMOSPHERE (PARAROSANILINE METHOD)
APPENDIX B—REFERENCE METHOD FOR THE DETERMINATION OF SUSPENDED PARTICULATE MATTER IN THE ATMOSPHERE (HIGH-VOLUME METHOD)
APPENDIX C—MEASUREMENT PRINCIPLE AND CALIBRATION PROCEDURE FOR THE MEASUREMENT OF CARBON MONOXIDE IN THE ATMOSPHERE (NON–DISPERSIVE INFRARED PHOTOMETRY)
APPENDIX D—MEASUREMENT PRINCIPLE AND CALIBRATION PROCEDURE FOR THE MEASUREMENT OF OZONE IN THE ATMOSPHERE
APPENDIX E—REFERENCE METHOD FOR DETERMINATION OF HYDROCARBONS CORRECTED FOR METHANE
APPENDIX F—MEASUREMENT PRINCIPLE AND CALIBRATION PROCEDURE FOR THE MEASUREMENT OF NITROGEN DIOXIDE IN THE ATMOSPHERE (GAS PHASE CHEMILUMINESCENCE)
APPENDIX G—REFERENCE METHOD FOR THE DETERMINATION OF LEAD IN SUSPENDED PARTICULATE MATTER COLLECTED FROM AMBIENT AIR
APPENDIX H—INTERPRETATION OF THE NATIONAL AMBIENT AIR QUALITY STANDARDS FOR OZONE
APPENDIX I—[RESERVED]
APPENDIX J—REFERENCE METHOD FOR THE DETERMINATION OF PARTICULATE MATTER AS PM_{10} in the Atmosphere
APPENDIX K—INTERPRETATION OF THE NATIONAL AMBIENT AIR QUALITY STANDARDS FOR PARTICULATE MATTER

AUTHORITY: Secs. 109 and 301(a), Clean Air Act, as amended (42 U.S.C. 7409, 7601(a)).

SOURCE: 36 FR 22384, Nov. 25, 1971, unless otherwise noted.

§ 50.1 Definitions.

(a) As used in this part, all terms not defined herein shall have the meaning given them by the Act.

(b) *Act* means the Clean Air Act, as amended (42 U.S.C. 1857–18571, as amended by Pub. L. 91–604).

(c) *Agency* means the Environmental Protection Agency.

(d) *Administrator* means the Administrator of the Environmental Protection Agency.

(e) *Ambient air* means that portion of the atmosphere, external to buildings, to which the general public has access.

(f) *Reference method* means a method of sampling and analyzing the ambient air for an air pollutant that is specified as a reference method in an appendix to this part, or a method that has been designated as a reference method in accordance with part 53 of this chapter; it does not include a method for which a reference method designation has been cancelled in accordance with § 53.11 or § 53.16 of this chapter.

(g) *Equivalent method* means a method of sampling and analyzing the ambient air for an air pollutant that has been designated as an equivalent method in accordance with part 53 of this chapter; it does not include a method for which an equivalent method designation has been cancelled in accordance with § 53.11 or § 53.16 of this chapter.

(h) *Traceable* means that a local standard has been compared and certified either directly or via not more than one intermediate standard, to a primary standard such as a National Bureau of Standards Standard Reference Material (NBS SRM), or a

USEPA/NBS-approved Certified Reference Material (CRM).

[36 FR 22384, Nov. 25, 1971, as amended at 41 FR 11253, Mar. 17, 1976; 48 FR 2529, Jan. 20, 1983]

§50.2 Scope.

(a) National primary and secondary ambient air quality standards under section 109 of the Act are set forth in this part.

(b) National primary ambient air quality standards define levels of air quality which the Administrator judges are necessary, with an adequate margin of safety, to protect the public health. National secondary ambient air quality standards define levels of air quality which the Administrator judges necessary to protect the public welfare from any known or anticipated adverse effects of a pollutant. Such standards are subject to revision, and additional primary and secondary standards may be promulgated as the Administrator deems necessary to protect the public health and welfare.

(c) The promulgation of national primary and secondary ambient air quality standards shall not be considered in any manner to allow significant deterioration of existing air quality in any portion of any State.

(d) The proposal, promulgation, or revision of national primary and secondary ambient air quality standards shall not prohibit any State from establishing ambient air quality standards for that State or any portion thereof which are more stringent than the national standards.

§50.3 Reference conditions.

All measurements of air quality are corrected to a reference temperature of 25° C. and to a reference pressure of 760 millimeters of mercury (1,013.2 millibars).

§50.4 National primary ambient air quality standards for sulfur oxides (sulfur dioxide).

(a) The level of the annual standard is 0.030 parts per million (ppm), not to be exceeded in a calendar year. The annual arithmetic mean shall be rounded to three decimal places (fractional parts equal to or greater than 0.0005 ppm shall be rounded up).

(b) The level of the 24-hour standard is 0.14 parts per million (ppm), not to be exceeded more than once per calendar year. The 24-hour averages shall be determined from successive non-overlapping 24-hour blocks starting at midnight each calendar day and shall be rounded to two decimal places (fractional parts equal to or greater than 0.005 ppm shall be rounded up).

(c) Sulfur oxides shall be measured in the ambient air as sulfur dioxide by the reference method described in appendix A to this part or by an equivalent method designated in accordance with part 53 of this chapter.

(d) To demonstrate attainment, the annual arithmetic mean and the second-highest 24-hour averages must be based upon hourly data that are at least 75 percent complete in each calendar quarter. A 24-hour block average shall be considered valid if at least 75 percent of the hourly averages for the 24-hour period are available. In the event that only 18, 19, 20, 21, 22, or 23 hourly averages are available, the 24-hour block average shall be computed as the sum of the available hourly averages using 18, 19, etc. as the divisor. If fewer than 18 hourly averages are available, but the 24-hour average would exceed the level of the standard when zeros are substituted for the missing values, subject to the rounding rule of paragraph (b) of this section, then this shall be considered a valid 24-hour average. In this case, the 24-hour block average shall be computed as the sum of the available hourly averages divided by 24.

[61 FR 25579, May 22, 1996]

§50.5 National secondary ambient air quality standard for sulfur oxides (sulfur dioxide).

(a) The level of the 3-hour standard is 0.5 parts per million (ppm), not to be exceeded more than once per calendar year. The 3-hour averages shall be determined from successive nonoverlapping 3-hour blocks starting at midnight each calendar day and shall be rounded to 1 decimal place (fractional parts equal to or greater than 0.05 ppm shall be rounded up).

(b) Sulfur oxides shall be measured in the ambient air as sulfur dioxide by the reference method described in appendix

A of this part or by an equivalent method designated in accordance with Part 53 of this chapter.

(c) To demonstrate attainment, the second-highest 3-hour average must be based upon hourly data that are at least 75 percent complete in each calendar quarter. A 3-hour block average shall be considered valid only if all three hourly averages for the 3-hour period are available. If only one or two hourly averages are available, but the 3-hour average would exceed the level of the standard when zeros are substituted for the missing values, subject to the rounding rule of paragraph (a) of this section, then this shall be considered a valid 3-hour average. In all cases, the 3-hour block average shall be computed as the sum of the hourly averages divided by 3.

[61 FR 25580, May 22, 1996]

§ 50.6 National primary and secondary ambient air quality standards for particulate matter.

(a) The level of the national primary and secondary 24-hour ambient air quality standards for particulate matter is 150 micrograms per cubic meter ($\mu g/m^3$), 24-hour average concentration. The standards are attained when the expected number of days per calendar year with a 24-hour average concentration above 150 $\mu g/m^3$, as determined in accordance with appendix K to this part, is equal to or less than one.

(b) The level of the national primary and secondary annual standards for particulate matter is 50 micrograms per cubic meter ($\mu g/m^3$), annual arithmetic mean. The standards are attained when the expected annual arithmetic mean concentration, as determined in accordance with appendix K to this part, is less than or equal to 50 $\mu g/m^3$.

(c) For the purpose of determining attainment of the primary and secondary standards, particulate matter shall be measured in the ambient air as PM_{10} (particles with an aerodynamic diameter less than or equal to a nominal 10 micrometers) by:

(1) A reference method based on appendix J and designated in accordance with part 53 of this chapter, or

(2) An equivalent method designated in accordance with part 53 of this chapter.

[52 FR 24663, July 1, 1987]

§ 50.7 [Reserved]

§ 50.8 National primary ambient air quality standards for carbon monoxide.

(a) The national primary ambient air quality standards for carbon monoxide are:

(1) 9 parts per million (10 milligrams per cubic meter) for an 8-hour average concentration not to be exceeded more than once per year and

(2) 35 parts per million (40 milligrams per cubic meter) for a 1-hour average concentration not to be exceeded more than once per year.

(b) The levels of carbon monoxide in the ambient air shall be measured by:

(1) A reference method based on appendix C and designated in accordance with part 53 of this chapter, or

(2) An equivalent method designated in accordance with part 53 of this chapter.

(c) An 8-hour average shall be considered valid if at least 75 percent of the hourly average for the 8-hour period are available. In the event that only six (or seven) hourly averages are available, the 8-hour average shall be computed on the basis of the hours available using six (or seven) as the divisor.

(d) When summarizing data for comparision with the standards, averages shall be stated to one decimal place. Comparison of the data with the levels of the standards in parts per million shall be made in terms of integers with fractional parts of 0.5 or greater rounding up.

[50 FR 37501, Sept. 13, 1985]

§ 50.9 National primary and secondary ambient air quality standards for ozone.

(a) The level of the national primary and secondary ambient air quality standards for ozone measured by a reference method based on appendix D to this part and designated in accordance with part 53 of this chapter, is 0.12 part per million (235 $\mu g/m^3$). The standard is attained when the expected number of

days per calendar year with maximum hourly average concentrations above 0.12 part per million (235 μg/m³) is equal to or less than 1, as determined by appendix H.

(Secs. 109 and 301 of the Clean Air Act, as amended (42 U.S.C. 7409, 7601))

[44 FR 8220, Feb. 8, 1979]

§ 50.10 [Reserved]

§ 50.11 National primary and secondary ambient air quality standards for nitrogen dioxide.

(a) The level of the national primary ambient air quality standard for nitrogen dioxide is 0.053 parts per million (100 micrograms per cubic meter), annual arithmetic mean concentration.

(b) The level of national secondary ambient air quality standard for nitrogen dioxide is 0.053 parts per million (100 micrograms per cubic meter), annual arithmetic mean concentration.

(c) The levels of the standards shall be measured by:

(1) A reference method based on appendix F and designated in accordance with part 53 of this chapter, or

(2) An equivalent method designated in accordance with part 53 of this chapter.

(d) The standards are attained when the annual arithmetic mean concentration in a calendar year is less than or equal to 0.053 ppm, rounded to three decimal places (fractional parts equal to or greater than 0.0005 ppm must be rounded up). To demonstrate attainment, an annual mean must be based upon hourly data that are at least 75 percent complete or upon data derived from manual methods that are at least 75 percent complete for the scheduled sampling days in each calendar quarter.

[50 FR 25544, June 19, 1985]

§ 50.12 National primary and secondary ambient air quality standards for lead.

National primary and secondary ambient air quality standards for lead and its compounds, measured as elemental lead by a reference method based on appendix G to this part, or by an equivalent method, are: 1.5 micrograms per cubic meter, maximum arithmetic mean averaged over a calendar quarter.

(Secs. 109, 301(a) Clean Air Act as amended (42 U.S.C. 7409, 7601(a)))

[43 FR 46258, Oct. 5, 1978]

APPENDIX A TO PART 50—REFERENCE METHOD FOR THE DETERMINATION OF SULFUR DIOXIDE IN THE ATMOSPHERE (PARAROSANILINE METHOD)

1.0 *Applicability.*

1.1 This method provides a measurement of the concentration of sulfur dioxide (SO_2) in ambient air for determining compliance with the primary and secondary national ambient air quality standards for sulfur oxides (sulfur dioxide) as specified in § 50.4 and § 50.5 of this chapter. The method is applicable to the measurement of ambient SO_2 concentrations using sampling periods ranging from 30 minutes to 24 hours. Additional quality assurance procedures and guidance are provided in part 58, Appendixes A and B, of this chapter and in references 1 and 2.

2.0 *Principle.*

2.1 A measured volume of air is bubbled through a solution of 0.04 M potassium tetrachloromercurate (TCM). The SO_2 present in the air stream reacts with the TCM solution to form a stable monochlorosulfonatomercurate(*3*) complex. Once formed, this complex resists air oxidation(*4, 5*) and is stable in the presence of strong oxidants such as ozone and oxides of nitrogen. During subsequent analysis, the complex is reacted with acid-bleached pararosaniline dye and formaldehyde to form an intensely colored pararosaniline methyl sulfonic acid.(*6*) The optical density of this species is determined spectrophotometrically at 548 nm and is directly related to the amount of SO_2 collected. The total volume of air sampled, corrected to EPA reference conditions (25° C, 760 mm Hg [101 kPa]), is determined from the measured flow rate and the sampling time. The concentration of SO_2 in the ambient air is computed and expressed in micrograms per standard cubic meter (μg/std m³).

3.0 *Range.*

3.1 The lower limit of detection of SO_2 in 10 mL of TCM is 0.75 μg (based on collaborative test results).(*7*) This represents a concentration of 25 μg SO_2/m³ (0.01 ppm) in an air sample of 30 standard liters (short-term sampling) and a concentration of 13 μg SO_2/m³ (0.005 ppm) in an air sample of 288 standard liters (long-term sampling). Concentrations less than 25 μg SO_2/m³ can be measured by sampling larger volumes of ambient air; however, the collection efficiency falls off rapidly at low concentrations.(*8, 9*) Beer's law is adhered to up to 34 μg of SO_2 in 25 mL of final solution. This upper limit of the analysis range represents a concentration of

1,130 µg SO_2/m^3 (0.43 ppm) in an air sample of 30 standard liters and a concentration of 590 µg SO_2/m^3 (0.23 ppm) in an air sample of 288 standard liters. Higher concentrations can be measured by collecting a smaller volume of air, by increasing the volume of absorbing solution, or by diluting a suitable portion of the collected sample with absorbing solution prior to analysis.

4.0 *Interferences.*

4.1 The effects of the principal potential interferences have been minimized or eliminated in the following manner: Nitrogen oxides by the addition of sulfamic acid,(*10, 11*) heavy metals by the addition of ethylenediamine tetracetic acid disodium salt (EDTA) and phosphoric acid,(*10, 12*) and ozone by time delay.(*10*) Up to 60 µg Fe (III), 22 µg V (V), 10 µg Cu (II), 10 µg Mn (II), and 10 µg Cr (III) in 10 mL absorbing reagent can be tolerated in the procedure.(*10*) No significant interference has been encountered with 2.3 µg NH_3.(*13*)

5.0 *Precision and Accuracy.*

5.1 The precision of the analysis is 4.6 percent (at the 95 percent confidence level) based on the analysis of standard sulfite samples.(*10*)

5.2 Collaborative test results (*14*) based on the analysis of synthetic test atmospheres (SO_2 in scrubbed air) using the 24-hour sampling procedure and the sulfite-TCM calibration procedure show that:

- The replication error varies linearly with concentration from ±2.5 µg/m³ at concentrations of 100 µg/m³ to ±7 µg/m³ at concentrations of 400 µg/m³.
- The day-to-day variability within an individual laboratory (repeatability) varies linearly with concentration from ±18.1 µg/m³ at levels of 100 µg/m³ to ±50.9 µg/m³ at levels of 400 µg/m³.
- The day-to-day variability between two or more laboratories (reproducibility) varies linearly with concentration from ±36.9 µg/m³ at levels of 100 µg/m³ to ±103.5 µg/m³ at levels of 400 µg/m³.
- The method has a concentration-dependent bias, which becomes significant at the 95 percent confidence level at the high concentration level. Observed values tend to be lower than the expected SO_2 concentration level.

6.0 *Stability.*

6.1 By sampling in a controlled temperature environment of 15°±10° C, greater than 98.9 percent of the SO_2–TCM complex is retained at the completion of sampling. (*15*) If kept at 5° C following the completion of sampling, the collected sample has been found to be stable for up to 30 days.(*10*) The presence of EDTA enhances the stability of SO_2 in the TCM solution and the rate of decay is independent of the concentration of SO_2.(*16*)

7.0 *Apparatus.*

7.1 *Sampling.*

7.1.1 *Sample probe:* A sample probe meeting the requirements of section 7 of 40 CFR part 58, appendix E (Teflon® or glass with residence time less than 20 sec.) is used to transport ambient air to the sampling train location. The end of the probe should be designed or oriented to preclude the sampling of precipitation, large particles, etc. A suitable probe can be constructed from Teflon® tubing connected to an inverted funnel.

7.1.2 *Absorber—short-term sampling:* An all glass midget impinger having a solution capacity of 30 mL and a stem clearance of 4±1 mm from the bottom of the vessel is used for sampling periods of 30 minutes and 1 hour (or any period considerably less than 24 hours). Such an impinger is shown in Figure 1. These impingers are commercially available from distributors such as Ace Glass, Incorporated.

7.1.3 *Absorber—24-hour sampling:* A polypropylene tube 32 mm in diameter and 164 mm long (available from Bel Art Products, Pequammock, NJ) is used as the absorber. The cap of the absorber must be a polypropylene cap with two ports (rubber stoppers are unacceptable because the absorbing reagent can react with the stopper to yield erroneously high SO_2 concentrations). A glass impinger stem, 6 mm in diameter and 158 mm long, is inserted into one port of the absorber cap. The tip of the stem is tapered to a small diameter orifice (0.4±0.1 mm) such that a No. 79 jeweler's drill bit will pass through the opening but a No. 78 drill bit will not. Clearance from the bottom of the absorber to the tip of the stem must be 6±2 mm. Glass stems can be fabricated by any reputable glass blower or can be obtained from a scientific supply firm. Upon receipt, the orifice test should be performed to verify the orifice size. The 50 mL volume level should be permanently marked on the absorber. The assembled absorber is shown in Figure 2.

7.1.4 *Moisture trap:* A moisture trap constructed of a glass trap as shown in Figure 1 or a polypropylene tube as shown in Figure 2 is placed between the absorber tube and flow control device to prevent entrained liquid from reaching the flow control device. The tube is packed with indicating silica gel as shown in Figure 2. Glass wool may be substituted for silica gel when collecting short-term samples (1 hour or less) as shown in Figure 1, or for long term (24 hour) samples if flow changes are not routinely encountered.

7.1.5 *Cap seals:* The absorber and moisture trap caps must seal securely to prevent leaks during use. Heat-shrink material as shown in Figure 2 can be used to retain the cap seals if there is any chance of the caps coming loose during sampling, shipment, or storage.

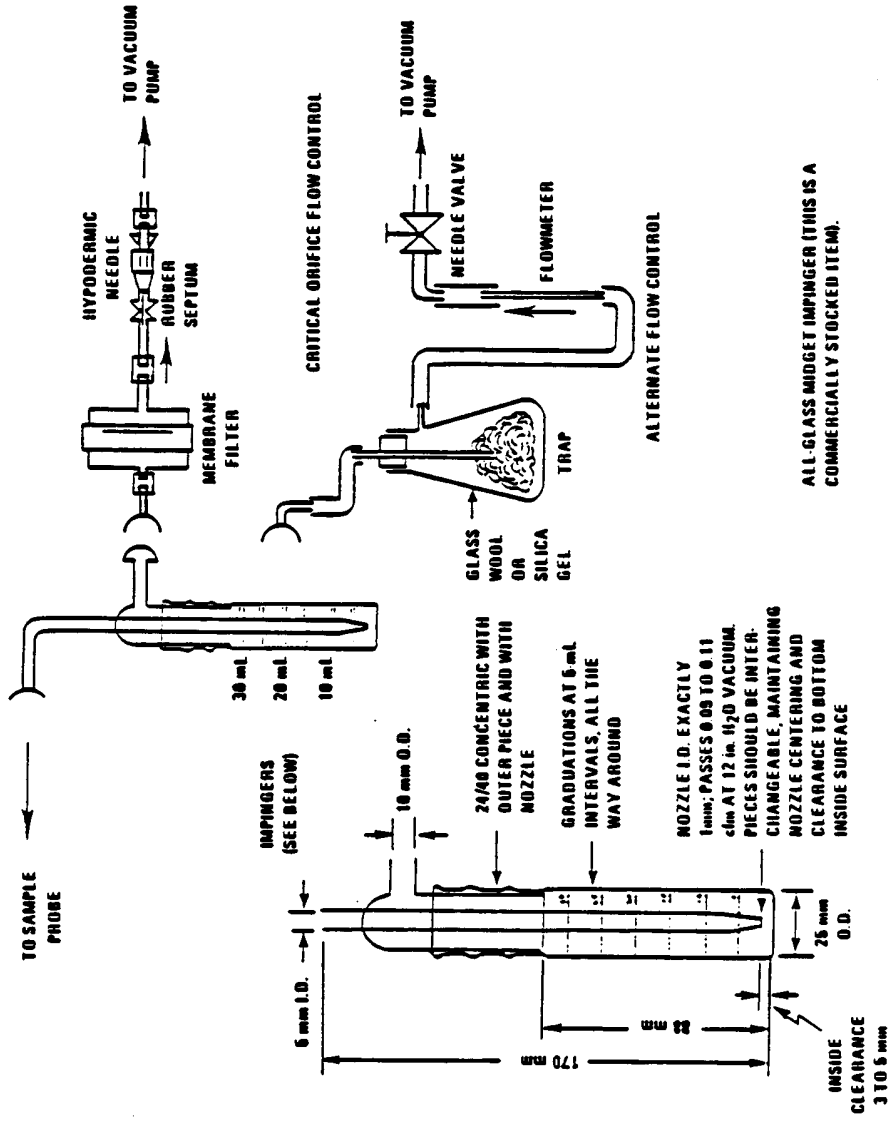

Figure 1. Short-term sampling train.

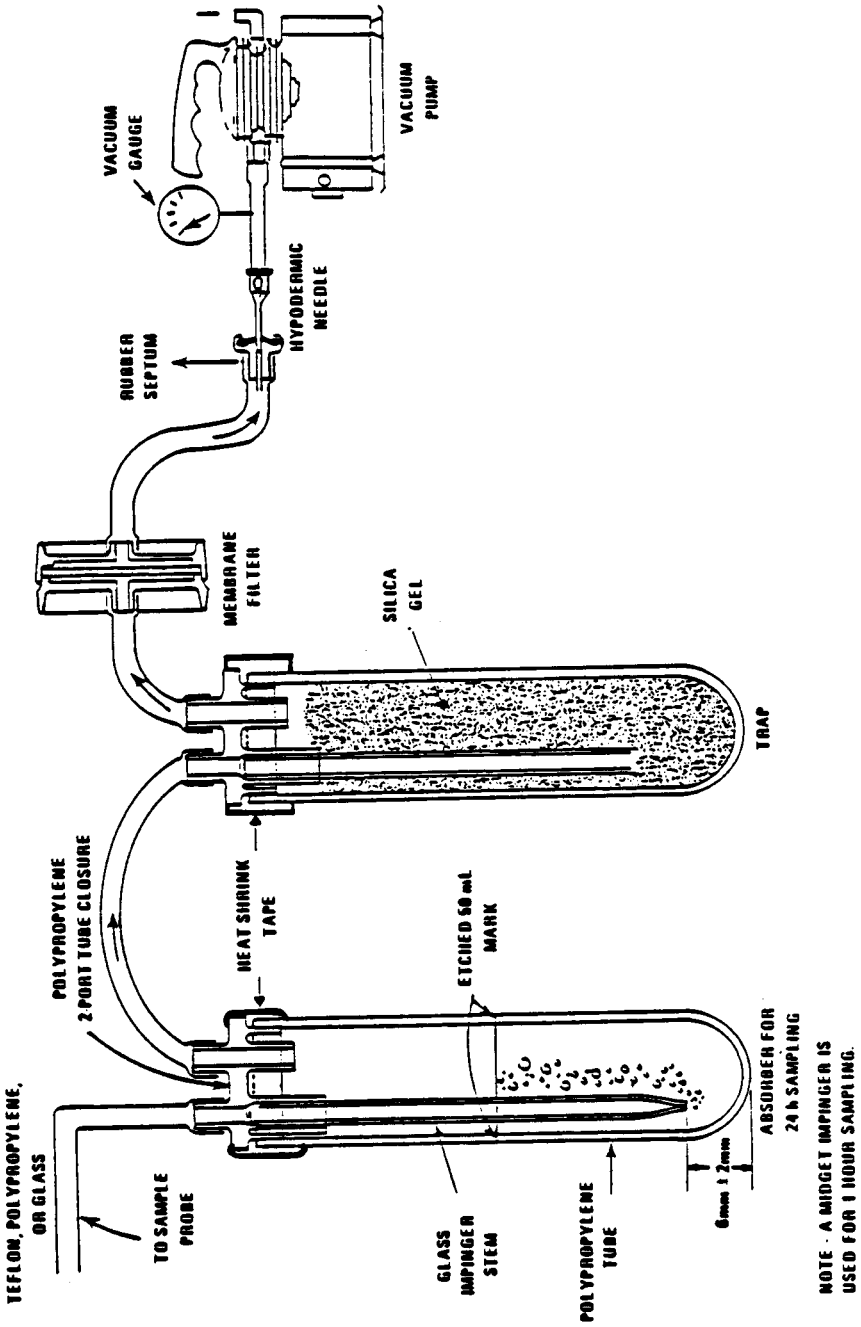

Figure 2. 24-Hour sampling system.

7.1.6 *Flow control device:* A calibrated rotameter and needle valve combination capable of maintaining and measuring air flow to within ±2 percent is suitable for short-term sampling but may not be used for long-term sampling. A critical orifice can be used for regulating flow rate for both long-term and short-term sampling. A 22-gauge hypodermic needle 25 mm long may be used as a critical orifice to yield a flow rate of approximately 1 L/min for a 30-minute sampling period. When sampling for 1 hour, a 23-gauge hypodermic needle 16 mm in length will provide a flow rate of approximately 0.5 L/min. Flow control for a 24-hour sample may be provided by a 27-gauge hypodermic needle critical orifice that is 9.5 mm in length. The flow rate should be in the range of 0.18 to 0.22 L/min.

7.1.7 *Flow measurement device:* Device calibrated as specified in 9.4.1 and used to measure sample flow rate at the monitoring site.

7.1.8 *Membrane particle filter:* A membrane filter of 0.8 to 2 µm porosity is used to protect the flow controller from particles during long-term sampling. This item is optional for short-term sampling.

7.1.9 *Vacuum pump:* A vacuum pump equipped with a vacuum gauge and capable of maintaining at least 70 kPa (0.7 atm) vacuum differential across the flow control device at the specified flow rate is required for sampling.

7.1.10 *Temperature control device:* The temperature of the absorbing solution during sampling must be maintained at 15° ±10° C. As soon as possible following sampling and until analysis, the temperature of the collected sample must be maintained at 5° ±5° C. Where an extended period of time may elapse before the collected sample can be moved to the lower storage temperature, a collection temperature near the lower limit of the 15 ± 10° C range should be used to minimize losses during this period. Thermoelectric coolers specifically designed for this temperature control are available commercially and normally operate in the range of 5° to 15° C. Small refrigerators can be modified to provide the required temperature control; however, inlet lines must be insulated from the lower temperatures to prevent condensation when sampling under humid conditions. A small heating pad may be necessary when sampling at low temperatures (<7° C) to prevent the absorbing solution from freezing.*(17)*

7.1.11 *Sampling train container:* The absorbing solution must be shielded from light during and after sampling. Most commercially available sampler trains are enclosed in a light-proof box.

7.1.12 *Timer:* A timer is recommended to initiate and to stop sampling for the 24-hour period. The timer is not a required piece of equipment; however, without the timer a technician would be required to start and stop the sampling manually. An elapsed time meter is also recommended to determine the duration of the sampling period.

7.2 *Shipping.*

7.2.1 *Shipping container:* A shipping container that can maintain a temperature of 5° ±5° C is used for transporting the sample from the collection site to the analytical laboratory. Ice coolers or refrigerated shipping containers have been found to be satisfactory. The use of eutectic cold packs instead of ice will give a more stable temperature control. Such equipment is available from Cole-Parmer Company, 7425 North Oak Park Avenue, Chicago, IL 60648.

7.3 *Analysis.*

7.3.1 *Spectrophotometer:* A spectrophotometer suitable for measurement of absorbances at 548 nm with an effective spectral bandwidth of less than 15 nm is required for analysis. If the spectrophotometer reads out in transmittance, convert to absorbance as follows:

$$A=\log_{10}(1/T) \qquad (1)$$

where:
A=absorbance, and
T=transmittance (0<T<1).

A standard wavelength filter traceable to the National Bureau of Standards is used to verify the wavelength calibration according to the procedure enclosed with the filter. The wavelength calibration must be verified upon initial receipt of the instrument and after each 160 hours of normal use or every 6 months, whichever occurs first.

7.3.2 *Spectrophotometer cells:* A set of 1-cm path length cells suitable for use in the visible region is used during analysis. If the cells are unmatched, a matching correction factor must be determined according to Section 10.1.

7.3.3 *Temperature control device:* The color development step during analysis must be conducted in an environment that is in the range of 20° to 30° C and controlled to ±1° C. Both calibration and sample analysis must be performed under identical conditions (within 1° C). Adequate temperature control may be obtained by means of constant temperature baths, water baths with manual temperature control, or temperature controlled rooms.

7.3.4 *Glassware:* Class A volumetric glassware of various capacities is required for preparing and standardizing reagents and standards and for dispensing solutions during analysis. These included pipets, volumetric flasks, and burets.

7.3.5 *TCM waste receptacle:* A glass waste receptacle is required for the storage of spent TCM solution. This vessel should be stoppered and stored in a hood at all times.

8.0 *Reagents.*

8.1 *Sampling.*

8.1.1 *Distilled water:* Purity of distilled water must be verified by the following procedure:(*18*)

- Place 0.20 mL of potassium permanganate solution (0.316 g/L), 500 mL of distilled water, and 1mL of concentrated sulfuric acid in a chemically resistant glass bottle, stopper the bottle, and allow to stand.
- If the permanganate color (pink) does not disappear completely after a period of 1 hour at room temperature, the water is suitable for use.
- If the permanganate color does disappear, the water can be purified by redistilling with one crystal each of barium hydroxide and potassium permanganate in an all glass still.

8.1.2 *Absorbing reagent* (0.04 M potassium tetrachloromercurate [TCM]): Dissolve 10.86 g mercuric chloride, 0.066 g EDTA, and 6.0 g potassium chloride in distilled water and dilute to volume with distilled water in a 1,000-mL volumetric flask. (*Caution:* Mercuric chloride is highly poisonous. If spilled on skin, flush with water immediately.) The pH of this reagent should be between 3.0 and 5.0 (*10*) Check the pH of the absorbing solution by using pH indicating paper or a pH meter. If the pH of the solution is not between 3.0 and 5.0, dispose of the solution according to one of the disposal techniques described in Section 13.0. The absorbing reagent is normally stable for 6 months. If a precipitate forms, dispose of the reagent according to one of the procedures described in Section 13.0.

8.2 *Analysis.*

8.2.1 *Sulfamic acid* (0.6%): Dissolve 0.6 g sulfamic acid in 100 mL distilled water. Perpare fresh daily.

8.2.2 *Formaldehyde* (0.2%): Dilute 5 mL formaldehyde solution (36 to 38 percent) to 1,000 mL with distilled water. Prepare fresh daily.

8.2.3 *Stock iodine solution* (0.1 N): Place 12.7 g resublimed iodine in a 250-mL beaker and add 40 g potassium iodide and 25 mL water. Stir until dissolved, transfer to a 1,000 mL volumetric flask and dilute to volume with distilled water.

8.2.4 *Iodine solution* (0.01 N): Prepare approximately 0.01 N iodine solution by diluting 50 mL of stock iodine solution (Section 8.2.3) to 500 mL with distilled water.

8.2.5 *Starch indicator solution:* Triturate 0.4 g soluble starch and 0.002 g mercuric iodide (preservative) with enough distilled water to form a paste. Add the paste slowly to 200 mL of boiling distilled water and continue boiling until clear. Cool and transfer the solution to a glass stopperd bottle.

8.2.6 *1 N hydrochloric acid:* Slowly and while stirring, add 86 mL of concentrated hydrochloric acid to 500 mL of distilled water. Allow to cool and dilute to 1,000 mL with distilled water.

8.2.7 *Potassium iodate solution:* Accurately weigh to the nearest 0.1 mg, 1.5 g (record weight) of primary standard grade potassium iodate that has been previously dried at 180° C for at least 3 hours and cooled in a dessicator. Dissolve, then dilute to volume in a 500-mL volumetric flask with distilled water.

8.2.8 *Stock sodium thiosulfate solution* (0.1 N): Prepare a stock solution by dissolving 25 g sodium thiosulfate ($Na_2S_2O_3 \bullet 5H_2O$) in 1,000 mL freshly boiled, cooled, distilled water and adding 0.1 g sodium carbonate to the solution. Allow the solution to stand at least 1 day before standardizing. To standardize, accurately pipet 50 mL of potassium iodate solution (Section 8.2.7) into a 500-mL iodine flask and add 2.0 g of potassium iodide and 10 mL of 1 N HCl. Stopper the flask and allow to stand for 5 minutes. Titrate the solution with stock sodium thiosulfate solution (Section 8.2.8) to a pale yellow color. Add 5 mL of starch solution (Section 8.2.5) and titrate until the blue color just disappears. Calculate the normality (N_s) of the stock sodium thiosulfate solution as follows:

$$N_S = \frac{W}{M} \times 2.80 \qquad (2)$$

where:

M=volume of thiosulfate required in mL, and

W=weight of potassium iodate in g (recorded weight in Section 8.2.7).

$$2.80 = \frac{10^3 \text{(conversion of g to mg)} \times 0.1 \text{(fraction iodate used)}}{35.67 \text{(equivalent weight of potassium iodate)}}$$

8.2.9 *Working sodium thiosulfate titrant* (0.01 N): Accurately pipet 100 mL of stock sodium thiosulfate solution (Section 8.2.8) into a 1,000-mL volumetric flask and dilute to volume with freshly boiled, cooled, distilled water. Calculate the normality of the working sodium thiosulfate titrant (N_T) as follows:

$$N_T = N_S \times 0.100 \qquad (3)$$

8.2.10 *Standardized sulfite solution for the preparation of working sulfite-TCM solution:* Dissolve 0.30 g sodium metabisulfite ($Na_2S_2O_5$) or 0.40 g sodium sulfite (Na_2SO_3) in 500 mL of recently boiled, cooled, distilled water. (Sulfite solution is unstable; it is therefore important to use water of the highest purity to minimize this instability.) This solution contains the equivalent of 320 to 400 µg SO_2/mL. The actual concentration of the solution is determined by adding excess iodine and back-titrating with standard sodium thiosulfate solution. To back-titrate, pipet 50 mL of the 0.01 N iodine solution (Section 8.2.4) into each of two 500-mL iodine flasks (A and B). To flask A (blank) add 25 mL distilled water, and to flask B (sample) pipet 25 mL sulfite solution. Stopper the

flasks and allow to stand for 5 minutes. Prepare the working sulfite-TCM solution (Section 8.2.11) immediately prior to adding the iodine solution to the flasks. Using a buret containing standardized 0.01 N thiosulfate titrant (Section 8.2.9), titrate the solution in each flask to a pale yellow color. Then add 5 mL starch solution (Section 8.2.5) and continue the titration until the blue color just disappears.

8.2.11 *Working sulfite-TCM solution:* Accurately pipet 5 mL of the standard sulfite solution (Section 8.2.10) into a 250-mL volumetric flask and dilute to volume with 0.04 M TCM. Calculate the concentration of sulfur dioxide in the working solution as follows:

$$C_{TCM/SO2}(\mu g\ SO_2/mL) = \frac{(A-B)(N_T)(32{,}000)}{25} \times 0.02 \qquad (4)$$

where:

A=volume of thiosulfate titrant required for the blank, mL;

B=volume of thiosulfate titrant required for the sample, mL;

N_T=normality of the thiosulfate titrant, from equation (3);

32,000=milliequivalent weight of SO_2, µg;

25=volume of standard sulfite solution, mL; and

0.02=dilution factor.

This solution is stable for 30 days if kept at 5° C.(16) If not kept at 5° C, prepare fresh daily.

8.2.12 *Purified pararosaniline (PRA) stock solution* (0.2% nominal):

8.2.12.1 *Dye specifications*—

- The dye must have a maximum absorbance at a wavelength of 540 nm when assayed in a buffered solution of 0.1 M sodium acetate-acetic acid;
- The absorbance of the reagent blank, which is temperature sensitive (0.015 absorbance unit/° C), must not exceed 0.170 at 22° C with a 1-cm optical path length when the blank is prepared according to the specified procedure;
- The calibration curve (Section 10.0) must have a slope equal to 0.030±0.002 absorbance unit/µg SO_2 with a 1-cm optical path length when the dye is pure and the sulfite solution is properly standardized.

8.2.12.2 *Preparation of stock PRA solution*—A specially purified (99 to 100 percent pure) solution of pararosaniline, which meets the above specifications, is commercially available in the required 0.20 percent concentration (Harleco Co.). Alternatively, the dye may be purified, a stock solution prepared, and then assayed according to the procedure as described below.*(10)*

8.2.12.3 *Purification procedure for PRA*—

1. Place 100 mL each of 1-butanol and 1 N HCl in a large separatory funnel (250-mL) and allow to equilibrate. Note: Certain batches of 1-butanol contain oxidants that create an SO_2 demand. Before using, check by placing 20 mL of 1-butanol and 5 mL of 20 percent potassium iodide (KI) solution in a 50-mL separatory funnel and shake thoroughly. If a yellow color appears in the alcohol phase, redistill the 1-butanol from silver oxide and collect the middle fraction or purchase a new supply of 1-butanol.

2. Weigh 100 mg of pararosaniline hydrochloride dye (PRA) in a small beaker. Add 50 mL of the equilibrated acid (drain in acid from the bottom of the separatory funnel in 1.) to the beaker and let stand for several minutes. Discard the remaining acid phase in the separatory funnel.

3. To a 125-mL separatory funnel, add 50 mL of the equilibrated 1-butanol (draw the 1-butanol from the top of the separatory funnel in 1.). Transfer the acid solution (from 2.) containing the dye to the funnel and shake carefully to extract. The violet impurity will transfer to the organic phase.

4. Transfer the lower aqueous phase into another separatory funnel, add 20 mL of equilibrated 1-butanol, and extract again.

5. Repeat the extraction procedure with three more 10-mL portions of equilibrated 1-butanol.

6. After the final extraction, filter the acid phase through a cotton plug into a 50-mL volumetric flask and bring to volume with 1 N HCl. This stock reagent will be a yellowish red.

7. To check the purity of the PRA, perform the assay and adjustment of concentration (Section 8.2.12.4) and prepare a reagent blank (Section 11.2); the absorbance of this reagent blank at 540 nm should be less than 0.170 at 22° C. If the absorbance is greater than 0.170 under these conditions, further extractions should be performed.

8.2.12.4 *PRA assay procedure*—The concentration of pararosaniline hydrochloride (PRA) need be assayed only once after purification. It is also recommended that commercial solutions of pararosaniline be assayed when first purchased. The assay procedure is as follows:*(10)*

1. Prepare 1 M acetate-acetic acid buffer stock solution with a pH of 4.79 by dissolving 13.61 g of sodium acetate trihydrate in distilled water in a 100-mL volumetric flask. Add 5.70 mL of glacial acetic acid and dilute to volume with distilled water.

2. Pipet 1 mL of the stock PRA solution obtained from the purification process or from a commercial source into a 100-mL volumetric flask and dilute to volume with distilled water.

3. Transfer a 5–mL aliquot of the diluted PRA solution from 2. into a 50–mL volumetric flask. Add 5mL of 1 M acetate-acetic acid buffer solution from 1. and dilute the

mixture to volume with distilled water. Let the mixture stand for 1 hour.

4. Measure the absorbance of the above solution at 540 nm with a spectrophotometer against a distilled water reference. Compute the percentage of nominal concentration of PRA by

$$\% \text{ PRA} = \frac{A \times K}{W} \quad (5)$$

where:

A=measured absorbance of the final mixture (absorbance units);

W=weight in grams of the PRA dye used in the assay to prepare 50 mL of stock solution (for example, 0.100 g of dye was used to prepare 50 mL of solution in the purification procedure; when obtained from commercial sources, use the stated concentration to compute W; for 98% PRA, W=.098 g.); and

K=21.3 for spectrophotometers having a spectral bandwidth of less than 15 nm and a path length of 1 cm.

8.2.13 *Pararosaniline reagent:* To a 250–mL volumetric flask, add 20 mL of stock PRA solution. Add an additional 0.2 mL of stock solution for each percentage that the stock assays below 100 percent. Then add 25 mL of 3 M phosphoric acid and dilute to volume with distilled water. The reagent is stable for at least 9 months. Store away from heat and light.

9.0 *Sampling Procedure.*

9.1 *General Considerations.* Procedures are described for short-term sampling (30-minute and 1-hour) and for long-term sampling (24-hour). Different combinations of absorbing reagent volume, sampling rate, and sampling time can be selected to meet special needs. For combinations other than those specifically described, the conditions must be adjusted so that linearity is maintained between absorbance and concentration over the dynamic range. Absorbing reagent volumes less than 10 mL are not recommended. The collection efficiency is above 98 percent for the conditions described; however, the efficiency may be substantially lower when sampling concentrations below 25$\mu\gamma SO_2/m^3$.(*8,9*)

9.2 *30-Minute and 1-Hour Sampling.* Place 10 mL of TCM absorbing reagent in a midget impinger and seal the impinger with a thin film of silicon stopcock grease (around the ground glass joint). Insert the sealed impinger into the sampling train as shown in Figure 1, making sure that all connections between the various components are leak tight. Greaseless ball joint fittings, heat shrinkable Teflon® tubing, or Teflon® tube fittings may be used to attain leakfree conditions for portions of the sampling train that come into contact with air containing SO_2. Shield the absorbing reagent from direct sunlight by covering the impinger with aluminum foil or by enclosing the sampling train in a light-proof box. Determine the flow rate according to Section 9.4.2. Collect the sample at 1±0.10 L/min for 30-minute sampling or 0.500±0.05 L/min for 1-hour sampling. Record the exact sampling time in minutes, as the sample volume will later be determined using the sampling flow rate and the sampling time. Record the atmospheric pressure and temperature.

9.3 *24-Hour Sampling.* Place 50 mL of TCM absorbing solution in a large absorber, close the cap, and, if needed, apply the heat shrink material as shown in Figure 3. Verify that the reagent level is at the 50 mL mark on the absorber. Insert the sealed absorber into the sampling train as shown in Figure 2. At this time verify that the absorber temperature is controlled to 15±10° C. During sampling, the absorber temperature must be controlled to prevent decomposition of the collected complex. From the onset of sampling until analysis, the absorbing solution must be protected from direct sunlight. Determine the flow rate according to Section 9.4.2. Collect the sample for 24 hours from midnight to midnight at a flow rate of 0.200±0.020 L/min. A start/stop timer is helpful for initiating and stopping sampling and an elapsed time meter will be useful for determining the sampling time.

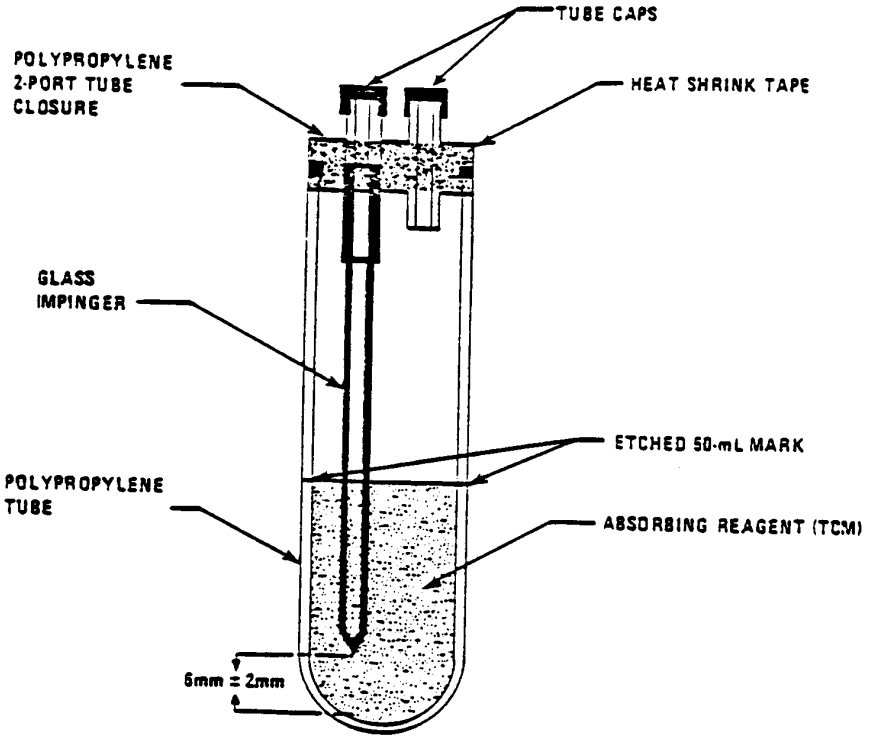

Figure 3. An absorber (24-hour sample) filled and assembled for shipment.

9.4 *Flow Measurement.*

9.4.1 *Calibration:* Flow measuring devices used for the on-site flow measurements required in 9.4.2 must be calibrated against a reliable flow or volume standard such as an NBS traceable bubble flowmeter or calibrated wet test meter. Rotameters or critical orifices used in the sampling train may be calibrated, if desired, as a quality control check, but such calibration shall not replace the on-site flow measurements required by 9.4.2. In-line rotameters, if they are to be calibrated, should be calibrated in situ, with the appropriate volume of solution in the absorber.

9.4.2 *Determination of flow rate at sampling site:* For short-term samples, the standard flow rate is determined at the sampling site at the initiation and completion of sample collection with a calibrated flow measuring device connected to the inlet of the absorber. For 24-hour samples, the standard flow rate is determined at the time the absorber is placed in the sampling train and again when the absorber is removed from the train for shipment to the analytical laboratory with a calibrated flow measuring device connected to the inlet of the sampling train. The flow rate determination must be made with all components of the sampling system in operation (e.g., the absorber temperature controller and any sample box heaters must also be operating). Equation 6 may be used to determine the standard flow rate when a calibrated positive displacement meter is used as the flow measuring device. Other types of calibrated flow measuring devices may also be used to determine the flow rate at the sampling site provided that the user applies any appropriate corrections to devices for which output is dependent on temperature or pressure.

$$Q_{std} = Q_{act} \times \frac{P_b - (1 - RH)\, P_{H_2O}}{P_{std}} \times \frac{298.16.}{(T_{meter} + 273.16).} \quad (6)$$

where:

Q_{std}=flow rate at standard conditions, std L/min (25° C and 760 mm Hg);

Q_{act}=flow rate at monitoring site conditions, L/min;

P_b=barometric pressure at monitoring site conditions, mm Hg or kPa;

RH=fractional relative humidity of the air being measured;

P_{H_2O}=vapor pressure of water at the temperature of the air in the flow or volume standard, in the same units as P_b, (for wet volume standards only, i.e., bubble flowmeter or wet test meter; for dry standards, i.e., dry test meter, P_{H_2O}=0);

P_{std}=standard barometric pressure, in the same units as P_b (760 mm Hg or 101 kPa); and

T_{meter}=temperature of the air in the flow or volume standard, °C (e.g., bubble flowmeter).

If a barometer is not available, the following equation may be used to determine the barometric pressure:

$$P_b = 760 - .076(H) \text{ mm Hg}, \quad \text{or}$$
$$P_b = 101 - .01(H) \text{ kPa} \quad (7)$$

where:

H=sampling site elevation above sea level in meters.

If the initial flow rate (Q_i) differs from the flow rate of the critical orifice or the flow rate indicated by the flowmeter in the sampling train (Q_c) by more than 5 percent as determined by equation (8), check for leaks and redetermine Q_i.

$$\%\ \text{Diff} = \frac{Q_i - Q_c}{Q_c} \times 100 \quad (8)$$

Invalidate the sample if the difference between the initial (Q_i) and final (Q_f) flow rates is more than 5 percent as determined by equation (9):

$$\%\ \text{Diff} = \frac{Q_i - Q_f}{Q_f} \times 100 \quad (9)$$

9.5 *Sample Storage and Shipment.* Remove the impinger or absorber from the sampling train and stopper immediately. Verify that the temperature of the absorber is not above 25° C. Mark the level of the solution with a temporary (e.g., grease pencil) mark. If the sample will not be analyzed within 12 hours of sampling, it must be stored at 5° ±5° C until analysis. Analysis must occur within 30 days. If the sample is transported or shipped for a period exceeding 12 hours, it is recommended that thermal coolers using eutectic ice packs, refrigerated shipping containers, etc., be used for periods up to 48 hours. (*17*) Measure the temperature of the absorber solution when the shipment is received. Invalidate the sample if the temperature is above 10° C. Store the sample at 5° ±5° C until it is analyzed.

10.0 *Analytical Calibration.*

10.1 *Spectrophotometer Cell Matching.* If unmatched spectrophotometer cells are used, an absorbance correction factor must be determined as follows:

1. Fill all cells with distilled water and designate the one that has the lowest absorbance at 548 nm as the reference. (This reference cell should be marked as such and continually used for this purpose throughout all future analyses.)

2. Zero the spectrophotometer with the reference cell.

3. Determine the absorbance of the remaining cells (A_c) in relation to the reference cell and record these values for future use. Mark all cells in a manner that adequately identifies the correction.

The corrected absorbance during future analyses using each cell is determining as follows:

$$A = A_{obs} - A_c \quad (10)$$

where:

A=corrected absorbance,

A_{obs}=uncorrected absorbance, and

A_c=cell correction.

10.2 *Static Calibration Procedure* (Option 1). Prepare a dilute working sulfite-TCM solution by diluting 10 mL of the working sulfite-TCM solution (Section 8.2.11) to 100 mL with TCM absorbing reagent. Following the table below, accurately pipet the indicated volumes of the sulfite-TCM solutions into a series of 25-mL volumetric flasks. Add TCM absorbing reagent as indicated to bring the volume in each flask to 10 mL.

Sulfite-TCM solution	Volume of sulfite-TCM solution	Volume of TCM, mL	Total µg SO_2 (approx.*
Working	4.0	6.0	28.8
Working	3.0	7.0	21.6
Working	2.0	8.0	14.4
Dilute working	10.0	0.0	7.2
Dilute working	5.0	5.0	3.6
	0.0	10.0	0.0

*Based on working sulfite-TCM solution concentration of 7.2 µg SO_2/mL; the actual total µg SO_2 must be calculated using equation 11 below.

To each volumetric flask, add 1 mL 0.6% sulfamic acid (Section 8.2.1), accurately pipet 2 mL 0.2% formaldehyde solution (Section 8.2.2), then add 5 mL pararosaniline solution (Section 8.2.13). Start a laboratory timer that has been set for 30 minutes. Bring all flasks to volume with recently boiled and cooled distilled water and mix thoroughly. The color must be developed (during the 30-minute period) in a temperature environment in the range of 20° to 30° C, which is controlled to ±1° C. For increased precision, a constant temperature bath is recommended during the color development step. After 30 minutes, determine the corrected absorbance of each standard at 548 nm against a distilled water reference (Section 10.1). Denote this absorbance as (A). Distilled water is used in the reference cell rather than the reagant blank because of the temperature sensitivity of the reagent blank. Calculate the total micrograms SO_2 in each solution:

$$\mu g\ SO_2 = V_{TCM/SO2} \times C_{TCM/SO2} \times D \qquad (11)$$

where:

$V_{TCM/SO2}$=volume of sulfite-TCM solution used, mL;

$C_{TCM/SO2}$=concentration of sulfur dioxide in the working sulfite-TCM, µg SO_2/mL (from equation 4); and

D=dilution factor (D=1 for the working sulfite-TCM solution; D=0.1 for the diluted working sulfite-TCM solution).

A calibration equation is determined using the method of linear least squares (Section 12.1). The total micrograms SO_2 contained in each solution is the x variable, and the corrected absorbance (eq. 10) associated with each solution is the y variable. For the calibration to be valid, the slope must be in the range of 0.030 ±0.002 absorbance unit/µg SO_2, the intercept as determined by the least squares method must be equal to or less than 0.170 absorbance unit when the color is developed at 22° C (add 0.015 to this 0.170 specification for each °C above 22° C) and the correlation coefficient must be greater than 0.998. If these criteria are not met, it may be the result of an impure dye and/or an improperly standardized sulfite-TCM solution. A calibration factor (B_s) is determined by calculating the reciprocal of the slope and is subsequently used for calculating the sample concentration (Section 12.3).

10.3 *Dynamic Calibration Procedures* (Option 2). Atmospheres containing accurately known concentrations of sulfur dioxide are prepared using permeation devices. In the systems for generating these atmospheres, the permeation device emits gaseous SO_2 at a known, low, constant rate, provided the temperature of the device is held constant (±0.1° C) and the device has been accurately calibrated at the temperature of use. The SO_2 permeating from the device is carried by a low flow of dry carrier gas to a mixing chamber where it is diluted with SO_2-free air to the desired concentration and supplied to a vented manifold. A typical system is shown schematically in Figure 4 and this system and other similar systems have been described in detail by O'Keeffe and Ortman; (*19*) Scaringelli, Frey, and Saltzman, (*20*) and Scaringelli, O'Keeffe, Rosenberg, and Bell. (*21*) Permeation devices may be prepared or purchased and in both cases must be traceable either to a National Bureau of Standards (NBS) Standard Reference Material (SRM 1625, SRM 1626, SRM 1627) or to an NBS/EPA-approved commercially available Certified Reference Material (CRM). CRM's are described in Reference 22, and a list of CRM sources is available from the address shown for Reference 22. A recommended protocol for certifying a permeation device to an NBS SRM or CRM is given in Section 2.0.7 of Reference 2. Device permeation rates of 0.2 to 0.4 µg/min, inert gas flows of about 50 mL/min, and dilution air flow rates from 1.1 to 15 L/min conveniently yield standard atmospheres in the range of 25 to 600 µg SO_2/m^3 (0.010 to 0.230 ppm).

10.3.1 *Calibration Option 2A* (30-minute and 1-hour samples): Generate a series of six standard atmospheres of SO_2 (e.g., 0, 50, 100, 200, 350, 500, 750 µg/m^3) by adjusting the dilution flow rates appropriately. The concentration of SO_2 in each atmosphere is calculated as follows:

$$C_a = \frac{P_r \times 10^3}{Q_d + Q_p} \qquad (12)$$

where:

C_a=concentration of SO_2 at standard conditions, µg/m^3;

P_r=permeation rate, µg/min;

Q_d=flow rate of dilution air, std L/min; and

Q_p=flow rate of carrier gas across permeation device, std L/min.

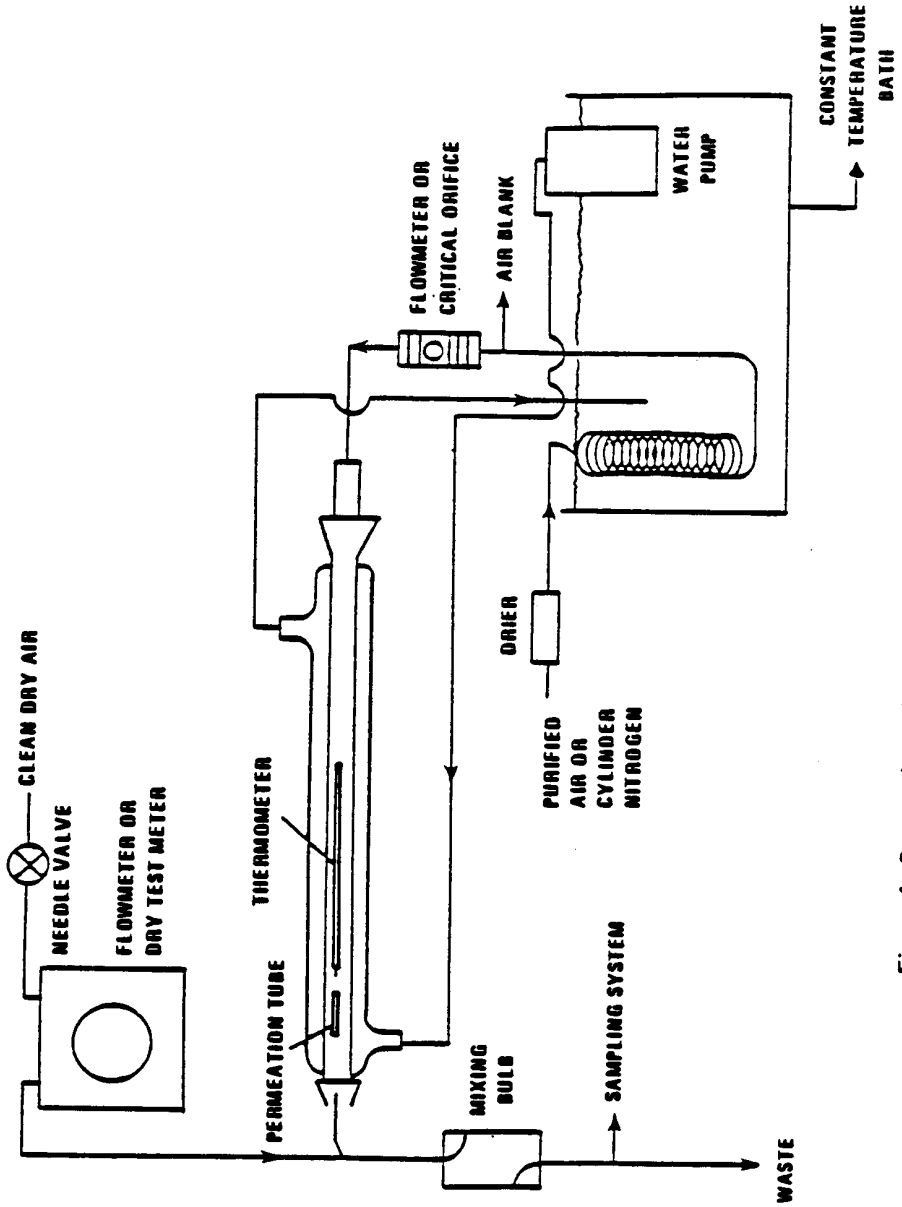

Figure 4. Permeation tube schematic for laboratory use.

Be sure that the total flow rate of the standard exceeds the flow demand of the sample train, with the excess flow vented at atmospheric pressure. Sample each atmosphere using similar apparatus as shown in Figure 1 and under the same conditions as field sampling (i.e., use same absorbing reagent volume and sample same volume of air at an equivalent flow rate). Due to the length of the sampling periods required, this method is not recommended for 24-hour sampling. At the completion of sampling, quantitatively transfer the contents of each impinger to one of a series of 25-mL volumetric flasks (if 10 mL of absorbing solution was used) using small amounts of distilled water for rinse (<5mL). If >10 mL of absorbing solution was used, bring the absorber solution in each impinger to orginal volume with distilled H_2O and pipet 10-mL portions from each impinger into a series of 25-mL volumetric flasks. If the color development steps are not to be started within 12 hours of sampling, store the solutions at 5° ± 5° C. Calculate the total micrograms SO_2 in each solution as follows:

$$\mu g SO_2 = \frac{C_a \times Q_s \times t \times V_a \times 10^{-3}}{V_b} \qquad (13)$$

where:

C_a=concentration of SO_2 in the standard atmosphere, µg/m³;

O_s=sampling flow rate, std L/min;

t=sampling time, min;

V_a=volume of absorbing solution used for color development (10 mL); and

V_b=volume of absorbing solution used for sampling, mL.

Add the remaining reagents for color development in the same manner as in Section 10.2 for static solutions. Calculate a calibration equation and a calibration factor (B_g) according to Section 10.2, adhering to all the specified criteria.

10.3.2 Calibration Option 2B (24-hour samples): Generate a standard atmosphere containing approximately 1,050 µg SO_2/m³ and calculate the exact concentration according to equation 12. Set up a series of six absorbers according to Figure 2 and connect to a common manifold for sampling the standard atmosphere. Be sure that the total flow rate of the standard exceeds the flow demand at the sample manifold, with the excess flow vented at atmospheric pressure. The absorbers are then allowed to sample the atmosphere for varying time periods to yield solutions containing 0, 0.2, 0.6, 1.0, 1.4, 1.8, and 2.2 µg SO_2/mL solution. The sampling times required to attain these solution concentrations are calculated as follows:

$$t = \frac{V_b \times C_s}{C_a \times Q_s \times 10^{-3}} \qquad (14)$$

where:

t=sampling time, min;

V_b=volume of absorbing solution used for sampling (50 mL);

C_s=desired concentration of SO_2 in the absorbing solution, µg/mL;

C_a=concentration of the standard atmosphere calculated according to equation 12, µg/m³; and

Q_s=sampling flow rate, std L/min.

At the completion of sampling, bring the absorber solutions to original volume with distilled water. Pipet a 10-mL portion from each absorber into one of a series of 25-mL volumetric flasks. If the color development steps are not to be started within 12 hours of sampling, store the solutions at 5° ± 5° C. Add the remaining reagents for color development in the same manner as in Section 10.2 for static solutions. Calculate the total µg SO_2 in each standard as follows:

$$\mu g SO_2 = \frac{C_a \times Q_s \times t \times V_a \times 10^{-3}}{V_b} \qquad (15)$$

where:

V_a=volume of absorbing solution used for color development (10 mL).

All other parameters are defined in equation 14.

Calculate a calibration equation and a calibration factor (B_t) according to Section 10.2 adhering to all the specified criteria.

11.0 *Sample Preparation and Analysis.*

11.1 *Sample Preparation.* Remove the samples from the shipping container. If the shipment period exceeded 12 hours from the completion of sampling, verify that the temperature is below 10° C. Also, compare the solution level to the temporary level mark on the absorber. If either the temperature is above 10° C or there was significant loss (more than 10 mL) of the sample during shipping, make an appropriate notation in the record and invalidate the sample. Prepare the samples for analysis as follows:

1. For 30-minute or 1-hour samples: Quantitatively transfer the entire 10 mL amount of absorbing solution to a 25-mL volumetric flask and rinse with a small amount (<5 mL) of distilled water.

2. For 24-hour samples: If the volume of the sample is less than the original 50-mL volume (permanent mark on the absorber), adjust the volume back to the original volume with distilled water to compensate for water lost to evaporation during sampling. If the final volume is greater than the original volume, the volume must be measured using a graduated cylinder. To analyze, pipet 10 mL

of the solution into a 25-mL volumetric flask.

11.2 *Sample Analysis.* For each set of determinations, prepare a reagent blank by adding 10 mL TCM absorbing solution to a 25-mL volumetric flask, and two control standards containing approximately 5 and 15 µg SO_2, respectively. The control standards are prepared according to Section 10.2 or 10.3. The analysis is carried out as follows:

1. Allow the sample to stand 20 minutes after the completion of sampling to allow any ozone to decompose (if applicable).
2. To each 25-mL volumetric flask containing reagent blank, sample, or control standard, add 1 mL of 0.6% sulfamic acid (Section 8.2.1) and allow to react for 10 min.
3. Accurately pipet 2 mL of 0.2% formaldehyde solution (Section 8.2.2) and then 5 mL of pararosaniline solution (Section 8.2.13) into each flask. Start a laboratory timer set at 30 minutes.
4. Bring each flask to volume with recently boiled and cooled distilled water and mix thoroughly.
5. During the 30 minutes, the solutions must be in a temperature controlled environment in the range of 20° to 30° C maintained to ± 1° C. This temperature must also be within 1° C of that used during calibration.
6. After 30 minutes and before 60 minutes, determine the corrected absorbances (equation 10) of each solution at 548 nm using 1-cm optical path length cells against a distilled water reference (Section 10.1). (*Distilled water is used as a reference instead of the reagent blank because of the sensitivity of the reagent blank to temperature.)*
7. Do not allow the colored solution to stand in the cells because a film may be deposited. Clean the cells with isopropyl alcohol after use.
8. The reagent blank must be within 0.03 absorbance units of the intercept of the calibration equation determined in Section 10.

11.3 *Absorbance range.* If the absorbance of the sample solution ranges between 1.0 and 2.0, the sample can be diluted 1:1 with a portion of the reagent blank and the absorbance redetermined within 5 minutes. Solutions with higher absorbances can be diluted up to sixfold with the reagent blank in order to obtain scale readings of less than 1.0 absorbance unit. However, it is recommended that a smaller portion (<10 mL) of the original sample be reanalyzed (if possible) if the sample requires a dilution greater than 1:1.

11.4 *Reaqent disposal.* All reagents containing mercury compounds must be stored and disposed of using one of the procedures contained in Section 13. Until disposal, the discarded solutions can be stored in closed glass containers and should be left in a fume hood.

12.0 *Calculations.*

12.1 *Calibration Slope, Intercept, and Correlation Coefficient.* The method of least squares is used to calculate a calibration equation in the form of:

$$y = mx + b \tag{16}$$

where:

y=corrected absorbance,
m=slope, absorbance unit/µg SO_2,
x=micrograms of SO_2,
b=y intercept (absorbance units).

The slope (m), intercept (b), and correlation coefficient (r) are calculated as follows:

$$m = \frac{n\sum xy - (\sum x)(\sum y)}{n\sum x^2 - (\sum x)^2} \tag{17}$$

$$b = \frac{\sum y - m\sum x}{n} \tag{18}$$

$$r = \sqrt{\frac{m(\sum xy - \sum x \sum y / n)}{\sum y^2 - (\sum y)^2 / n}} \tag{19}$$

where n is the number of calibration points.

A data form (Figure 5) is supplied for easily organizing calibration data when the slope, intercept, and correlation coefficient are calculated by hand.

12.2 *Total Sample Volume.* Determine the sampling volume at standard conditions as follows:

$$V_{std} = \frac{Q_i + Q_f}{2} \times t \tag{20}$$

where:

V_{std}=sampling volume in std L,
Q_i=standard flow rate determined at the initiation of sampling in std L/min,
Q_f=standard flow rate determined at the completion of sampling is std L/min, and
t=total sampling time, min.

12.3 *Sulfur Dioxide Concentration.* Calculate and report the concentration of each sample as follows:

$$\mu g\ SO_2/m^3 = \frac{(A - A_o)(B_x)(10^3)}{V_{std}} \times \frac{V_b}{V_a} \tag{21}$$

where:

A=corrected absorbance of the sample solution, from equation (10);
A_o=corrected absorbance of the reagent blank, using equation (10);
B_x=calibration factor equal to B_s, B_g, or B_t depending on the calibration procedure used, the reciprocal of the slope of the calibration equation;
V_a=volume of absorber solution analyzed, mL;
V_b=total volume of solution in absorber (see 11.1–2), mL; and
V_{std}=standard air volume sampled, std L (from Section 12.2).

DATA FORM

[For hand calculations]

Calibration point no.	Micrograms SO_2	Absorbance units			
	(x)	(y)	x^2	xy	y^2
1	.....	.....	.....	.....	
2	.....	.....	.....	.....	
3	.....	.....	.....	.....	
4	.....	.....	.....	.....	
5	.....	.....	.....	.....	
6	.....	.....	.....	.....	

Σx=_____ Σy=_____ Σx^2=_____ Σxy_____
Σy^2_____
n=_____ (number of pairs of coordinates.)

FIGURE 5. Data form for hand calculations.

12.4 Control Standards. Calculate the analyzed micrograms of SO_2 in each control standard as follows:

$$C_q=(A-A_o)\times B_x \qquad (22)$$

where:

C_q=analyzed µg SO_2 in each control standard,
A=corrected absorbance of the control standard, and
A_o=corrected absorbance of the reagent blank.

The difference between the true and analyzed values of the control standards must not be greater than 1 µg. If the difference is greater than 1 µg, the source of the discrepancy must be identified and corrected.

12.5 Conversion of µg/m³ to ppm (v/v). If desired, the concentration of sulfur dioxide at reference conditions can be converted to ppm SO_2 (v/v) as follows:

$$\text{ppm } SO_2 = \frac{\mu g\ SO_2}{m^3} \times 3.82 \times 10^{-4} \qquad (23)$$

13.0 The TCM absorbing solution and any reagents containing mercury compounds must be treated and disposed of by one of the methods discussed below. Both methods remove greater than 99.99 percent of the mercury.

13.1 *Disposal of Mercury-Containing Solutions.*

13.2 *Method for Forming an Amalgam.*

1. Place the waste solution in an uncapped vessel in a hood.

2. For each liter of waste solution, add approximately 10 g of sodium carbonate until neutralization has occurred (NaOH may have to be used).

3. Following neutralization, add 10 g of granular zinc or magnesium.

4. Stir the solution in a hood for 24 hours. Caution must be exercised as hydrogen gas is evolved by this treatment process.

5. After 24 hours, allow the solution to stand without stirring to allow the mercury amalgam (solid black material) to settle to the bottom of the waste receptacle.

6. Upon settling, decant and discard the supernatant liquid.

7. Quantitatively transfer the solid material to a container and allow to dry.

8. The solid material can be sent to a mercury reclaiming plant. It must not be discarded.

13.3 *Method Using Aluminum Foil Strips.*

1. Place the waste solution in an uncapped vessel in a hood.

2. For each liter of waste solution, add approximately 10 g of aluminum foil strips. If all the aluminum is consumed and no gas is evolved, add an additional 10 g of foil. Repeat until the foil is no longer consumed and allow the gas to evolve for 24 hours.

3. Decant the supernatant liquid and discard.

4. Transfer the elemental mercury that has settled to the bottom of the vessel to a storage container.

5. The mercury can be sent to a mercury reclaiming plant. It must not be discarded.

14.0 *References for SO_2 Method.*

1. Quality Assurance Handbook for Air Pollution Measurement Systems, Volume I, Principles. EPA–600/9–76–005, U.S. Environmental Protection Agency, Research Triangle Park, NC 27711, 1976.

2. Quality Assurance Handbook for Air Pollution Measurement Systems, Volume II, Ambient Air Specific Methods. EPA–600/4–77–027a, U.S. Environmental Protection Agency, Research Triangle Park, NC 27711, 1977.

3. Dasqupta, P. K., and K. B. DeCesare. Stability of Sulfur Dioxide in Formaldehyde and Its Anomalous Behavior in Tetrachloromercurate (II). Submitted for publication in *Atmospheric Environment*, 1982.

4. West, P. W., and G. C. Gaeke. Fixation of Sulfur Dioxide as Disulfitomercurate (II) and Subsequent Colorimetric Estimation. Anal. Chem., 28:1816, 1956.

5. Ephraim, F. Inorganic Chemistry. P. C. L. Thorne and E. R. Roberts, Eds., 5th Edition, Interscience, 1948, p. 562.

6. Lyles, G. R., F. B. Dowling, and V. J. Blanchard. Quantitative Determination of Formaldehyde in the Parts Per Hundred Million Concentration Level. J. Air. Poll. Cont. Assoc., Vol. 15(106), 1965.

7. McKee, H. C., R. E. Childers, and O. Saenz, Jr. Collaborative Study of Reference Method for Determination of Sulfur Dioxide in the Atmosphere (Pararosaniline Method). EPA–APTD–0903, U.S. Environmental Protection Agency, Research Triangle Park, NC 27711, September 1971.

8. Urone, P., J. B. Evans, and C. M. Noyes. Tracer Techniques in Sulfur—Air Pollution Studies Apparatus and Studies of Sulfur Dioxide Colorimetric and Conductometric Methods. Anal. Chem., 37: 1104, 1965.

9. Bostrom, C. E. The Absorption of Sulfur Dioxide at Low Concentrations (pphm) Studied by an Isotopic Tracer Method. Intern. J. Air Water Poll., 9:333, 1965.

10. Scaringelli, F. P., B. E. Saltzman, and S. A. Frey. Spectrophotometric Determination of Atmospheric Sulfur Dioxide. Anal. Chem., 39: 1709, 1967.

11. Pate, J. B., B. E. Ammons, G. A. Swanson, and J. P. Lodge, Jr. Nitrite Interference in Spectrophotometric Determination of Atmospheric Sulfur Dioxide. Anal. Chem., 37:942, 1965.

12. Zurlo, N., and A. M. Griffini. Measurement of the Sulfur Dioxide Content of the Air in the Presence of Oxides of Nitrogen and Heavy Metals. Medicina Lavoro, 53:330, 1962.

13. Rehme, K. A., and F. P. Scaringelli. Effect of Ammonia on the Spectrophotometric Determination of Atmospheric Concentrations of Sulfur Dioxide. Anal. Chem., 47:2474, 1975.

14. McCoy, R. A., D. E. Camann, and H. C. McKee. Collaborative Study of Reference Method for Determination of Sulfur Dioxide in the Atmosphere (Pararosaniline Method) (24-Hour Sampling). EPA–650/4–74–027, U.S. Environmental Protection Agency, Research Triangle Park, NC 27711, December 1973.

15. Fuerst, R. G. Improved Temperature Stability of Sulfur Dioxide Samples Collected by the Federal Reference Method. EPA–600/4–78–018, U.S. Environmental Protection Agency, Research Triangle Park, NC 27711, April 1978.

16. Scaringelli, F. P., L. Elfers, D. Norris, and S. Hochheiser. Enhanced Stability of Sulfur Dioxide in Solution. Anal. Chem., 42:1818, 1970.

17. Martin, B. E. Sulfur Dioxide Bubbler Temperature Study. EPA–600/4–77–040, U.S. Environmental Protection Agency, Research Triangle Park, NC 27711, August 1977.

18. American Society for Testing and Materials. ASTM Standards, Water; Atmospheric Analysis. Part 23. Philadelphia, PA, October 1968, p. 226.

19. O'Keeffe, A. E., and G. C. Ortman. Primary Standards for Trace Gas Analysis. Anal. Chem., 38:760, 1966.

20. Scaringelli, F. P., S. A. Frey, and B. E. Saltzman. Evaluation of Teflon Permeation Tubes for Use with Sulfur Dioxide. Amer. Ind. Hygiene Assoc. J., 28:260, 1967.

21. Scaringelli, F. P., A. E. O'Keeffe, E. Rosenberg, and J. P. Bell, Preparation of Known Concentrations of Gases and Vapors With Permeation Devices Calibrated Gravimetrically. Anal. Chem., 42:871, 1970.

22. A Procedure for Establishing Traceability of Gas Mixtures to Certain National Bureau of Standards Standard Reference Materials. EPA–600/7–81–010, U.S. Environmental Protection Agency, Environmental Monitoring Systems Laboratory (MD–77), Research Triangle Park, NC 27711, January 1981.

[47 FR 54899, Dec. 6, 1982; 48 FR 17355, Apr. 22, 1983]

APPENDIX B TO PART 50—REFERENCE METHOD FOR THE DETERMINATION OF SUSPENDED PARTICULATE MATTER IN THE ATMOSPHERE (HIGH-VOLUME METHOD)

1.0 *Applicability.*

1.1 This method provides a measurement of the mass concentration of total suspended particulate matter (TSP) in ambient air for determining compliance with the primary and secondary national ambient air quality standards for particulate matter as specified in §50.6 and §50.7 of this chapter. The measurement process is nondestructive, and the size of the sample collected is usually adequate for subsequent chemical analysis. Quality assurance procedures and guidance are provided in part 58, appendixes A and B, of this chapter and in References 1 and 2.

2.0 *Principle.*

2.1 An air sampler, properly located at the measurement site, draws a measured quantity of ambient air into a covered housing and through a filter during a 24-hr (nominal) sampling period. The sampler flow rate and the geometry of the shelter favor the collection of particles up to 25–50 μm (aerodynamic diameter), depending on wind speed and direction.(*3*) The filters used are specified to have a minimum collection efficiency of 99 percent for 0.3 μm (DOP) particles (see Section 7.1.4).

2.2 The filter is weighed (after moisture equilibration) before and after use to determine the net weight (mass) gain. The total volume of air sampled, corrected to EPA standard conditions (25° C, 760 mm Hg [101 kPa]), is determined from the measured flow rate and the sampling time. The concentration of total suspended particulate matter in the ambient air is computed as the mass of collected particles divided by the volume of air sampled, corrected to standard conditions, and is expressed in micrograms per standard cubic meter (μg/std m^3). For samples collected at temperatures and pressures significantly different than standard conditions, these corrected concentrations may differ substantially from actual concentrations (micrograms per actual cubic meter), particularly at high elevations. The actual particulate matter concentration can be calculated from the corrected concentration using the actual temperature and pressure during the sampling period.

3.0 *Range.*

3.1 The approximate concentration range of the method is 2 to 750 μg/std m^3. The upper limit is determined by the point at which the sampler can no longer maintain the specified

flow rate due to the increased pressure drop of the loaded filter. This point is affected by particle size distribution, moisture content of the collected particles, and variability from filter to filter, among other things. The lower limit is determined by the sensitivity of the balance (see Section 7.10) and by inherent sources of error (see Section 6).

3.2 At wind speeds between 1.3 and 4.5 m/sec (3 and 10 mph), the high-volume air sampler has been found to collect particles up to 25 to 50 µm, depending on wind speed and direction.(*3*) For the filter specified in Section 7.1, there is effectively no lower limit on the particle size collected.

4.0 *Precision.*

4.1 Based upon collaborative testing, the relative standard deviation (coefficient of variation) for single analyst precision (repeatability) of the method is 3.0 percent. The corresponding value for interlaboratory precision (reproducibility) is 3.7 percent.(*4*)

5.0 *Accuracy.*

5.1 The absolute accuracy of the method is undefined because of the complex nature of atmospheric particulate matter and the difficulty in determining the ''true'' particulate matter concentration. This method provides a measure of particulate matter concentration suitable for the purpose specified under Section 1.0, Applicability.

6.0 *Inherent Sources of Error.*

6.1 *Airflow variation.* The weight of material collected on the filter represents the (integrated) sum of the product of the instantaneous flow rate times the instantaneous particle concentration. Therefore, dividing this weight by the average flow rate over the sampling period yields the true particulate matter concentration only when the flow rate is constant over the period. The error resulting from a nonconstant flow rate depends on the magnitude of the instantaneous changes in the flow rate and in the particulate matter concentration. Normally, such errors are not large, but they can be greatly reduced by equipping the sampler with an automatic flow controlling mechanism that maintains constant flow during the sampling period. Use of a contant flow controller is recommended.*

6.2 *Air volume measurement.* If the flow rate changes substantially or nonuniformly during the sampling period, appreciable error in the estimated air volume may result from using the average of the presampling and postsampling flow rates. Greater air volume measurement accuracy may be achieved by (1) equipping the sampler with a flow controlling mechanism that maintains constant air flow during the sampling period,* (2) using a calibrated, continuous flow rate recording device to record the actual flow rate during the samping period and integrating the flow rate over the period, or (3) any other means that will accurately measure the total air volume sampled during the sampling period. Use of a continuous flow recorder is recommended, particularly if the sampler is not equipped with a constant flow controller.

6.3 *Loss of volatiles.* Volatile particles collected on the filter may be lost during subsequent sampling or during shipment and/or storage of the filter prior to the postsampling weighing.(*5*) Although such losses are largely unavoidable, the filter should be reweighed as soon after sampling as practical.

6.4 *Artifact particulate matter.* Artifact particulate matter can be formed on the surface of alkaline glass fiber filters by oxidation of acid gases in the sample air, resulting in a higher than true TSP determination.(*6 7*) This effect usually occurs early in the sample period and is a function of the filter pH and the presence of acid gases. It is generally believed to account for only a small percentage of the filter weight gain, but the effect may become more significant where relatively small particulate weights are collected.

6.5 *Humidity.* Glass fiber filters are comparatively insensitive to changes in relative humidity, but collected particulate matter can be hygroscopic.(*8*) The moisture conditioning procedure minimizes but may not completely eliminate error due to moisture.

6.6 *Filter handling.* Careful handling of the filter between the presampling and postsampling weighings is necessary to avoid errors due to loss of fibers or particles from the filter. A filter paper cartridge or cassette used to protect the filter can minimize handling errors. (See Reference 2, Section 2).

6.7 *Nonsampled particulate matter.* Particulate matter may be deposited on the filter by wind during periods when the sampler is inoperative. (*9*) It is recommended that errors from this source be minimized by an automatic mechanical device that keeps the filter covered during nonsampling periods, or by timely installation and retrieval of filters to minimize the nonsampling periods prior to and following operation.

6.8 *Timing errors.* Samplers are normally controlled by clock timers set to start and stop the sampler at midnight. Errors in the nominal 1,440-min sampling period may result from a power interruption during the sampling period or from a discrepancy between the start or stop time recorded on the filter information record and the actual start or stop time of the sampler. Such discrepancies may be caused by (1) poor resolution of the timer set-points, (2) timer error due to power interruption, (3) missetting of

*At elevated altitudes, the effectiveness of automatic flow controllers may be reduced because of a reduction in the maximum sampler flow.

the timer, or (4) timer malfunction. In general, digital electronic timers have much better set-point resolution than mechanical timers, but require a battery backup system to maintain continuity of operation after a power interruption. A continuous flow recorder or elapsed time meter provides an indication of the sampler run-time, as well as indication of any power interruption during the sampling period and is therefore recommended.

6.9 *Recirculation of sampler exhaust.* Under stagnant wind conditions, sampler exhaust air can be resampled. This effect does not appear to affect the TSP measurement substantially, but may result in increased carbon and copper in the collected sample. (*10*) This problem can be reduced by ducting the exhaust air well away, preferably downwind, from the sampler.

7.0 *Apparatus.*

(See References 1 and 2 for quality assurance information.)

NOTE: Samplers purchased prior to the effective date of this amendment are not subject to specifications preceded by (†).

7.1 *Filter.* (Filters supplied by the Environmental Protection Agency can be assumed to meet the following criteria. Additional specifications are required if the sample is to be analyzed chemically.)

7.1.1 *Size:* 20.3±0.2×25.4±0.2 cm (nominal 8×10 in).

7.1.2 *Nominal exposed area:* 406.5 cm^2 (63 in^2).

7.1.3. *Material:* Glass fiber or other relatively inert, nonhygroscopic material. (*8*)

7.1.4 *Collection efficiency:* 99 percent minimum as measured by the DOP test (ASTM–2986) for particles of 0.3 µm diameter.

7.1.5 *Recommended pressure drop range:* 42–54 mm Hg (5.6–7.2 kPa) at a flow rate of 1.5 std m^3/min through the nominal exposed area.

7.1.6 *pH:* 6 to 10. (*11*)

7.1.7 *Integrity:* 2.4 mg maximum weight loss. (*11*)

7.1.8 *Pinholes:* None.

7.1.9 *Tear strength:* 500 g minimum for 20 mm wide strip cut from filter in weakest dimension. (See ASTM Test D828–60).

7.1.10 *Brittleness:* No cracks or material separations after single lengthwise crease.

7.2 *Sampler.* The air sampler shall provide means for drawing the air sample, via reduced pressure, through the filter at a uniform face velocity.

7.2.1 The sampler shall have suitable means to:

a. Hold and seal the filter to the sampler housing.

b. Allow the filter to be changed conveniently.

c. Preclude leaks that would cause error in the measurement of the air volume passing through the filter.

d. (†) Manually adjust the flow rate to accommodate variations in filter pressure drop and site line voltage and altitude. The adjustment may be accomplished by an automatic flow controller or by a manual flow adjustment device. Any manual adjustment device must be designed with positive detents or other means to avoid unintentional changes in the setting.

7.2.2 *Minimum sample flow rate, heavily loaded filter:* 1.1 m^3/min (39 ft^3/min).††

7.2.3 *Maximum sample flow rate, clean filter:* 1.7 m^3/min (60 ft^3/min).††

7.2.4 *Blower Motor:* The motor must be capable of continuous operation for 24-hr periods.

7.3 *Sampler shelter.*

7.3.1 The sampler shelter shall:

a. Maintain the filter in a horizontal position at least 1 m above the sampler supporting surface so that sample air is drawn downward through the filter.

b. Be rectangular in shape with a gabled roof, similar to the design shown in Figure 1.

c. Cover and protect the filter and sampler from precipitation and other weather.

d. Discharge exhaust air at least 40 cm from the sample air inlet.

e. Be designed to minimize the collection of dust from the supporting surface by incorporating a baffle between the exhaust outlet and the supporting surface.

7.3.2 The sampler cover or roof shall overhang the sampler housing somewhat, as shown in Figure 1, and shall be mounted so as to form an air inlet gap between the cover and the sampler housing walls. †This sample air inlet should be approximately uniform on all sides of the sampler. †The area of the sample air inlet must be sized to provide an effective particle capture air velocity of between 20 and 35 cm/sec at the recommended operational flow rate. The capture velocity is the sample air flow rate divided by the inlet area measured in a horizontal plane at the lower edge of the cover. †Ideally, the inlet area and operational flow rate should be selected to obtain a capture air velocity of 25 ±2 cm/sec.

7.4 *Flow rate measurement devices.*

7.4.1 The sampler shall incorporate a flow rate measurement device capable of indicating the total sampler flow rate. Two common types of flow indicators covered in the calibration procedure are (1) an electronic mass flowmeter and (2) an orifice or orifices located in the sample air stream together with

(†) See note at beginning of Section 7 of this appendix.

††These specifications are in actual air volume units; to convert to EPA standard air volume units, multiply the specifications by $(P_b/P_{std})(298/T)$ where P_b and T are the barometric pressure in mm Hg (or kPa) and the temperature in K at the sampler, and P_{std} is 760 mm Hg (or 101 kPa).

a suitable pressure indicator such as a manometer, or aneroid pressure gauge. A pressure recorder may be used with an orifice to provide a continuous record of the flow. Other types of flow indicators (including rotameters) having comparable precision and accuracy are also acceptable.

7.4.2 † The flow rate measurement device must be capable of being calibrated and read in units corresponding to a flow rate which is readable to the nearest 0.02 std m^3/min over the range 1.0 to 1.8 std m^3/min.

7.5 *Thermometer,* to indicate the approximate air temperature at the flow rate measurement orifice, when temperature corrections are used.

7.5.1 *Range:* −40° to +50° C (223–323 K).

7.5.2 *Resolution:* 2° C (2 K).

7.6 *Barometer,* to indicate barometric pressure at the flow rate measurement orifice, when pressure corrections are used.

7.6.1 *Range:* 500 to 800 mm Hg (66–106 kPa).

7.6.2 *Resolution:* ±5 mm Hg (0.67 kPa).

7.7 *Timing/control device.*

7.7.1 The timing device must be capable of starting and stopping the sampler to obtain an elapsed run-time of 24 hr ±1 hr (1,440 ±60 min).

7.7.2 *Accuracy of time setting:* ±30 min, or better. (See Section 6.8).

7.8 *Flow rate transfer standard,* traceable to a primary standard. (See Section 9.2.)

7.8.1 *Approximate range:* 1.0 to 1.8 m^3/min.

7.8.2 *Resolution:* 0.02 m^3/min.

7.8.3 *Reproducibility:* ±2 percent (2 times coefficient of variation) over normal ranges of ambient temperature and pressure for the stated flow rate range. (See Reference 2, Section 2.)

7.8.4 *Maximum pressure drop at 1.7 std m^3/*min; 50 cm H_2O (5 kPa).

7.8.5 The flow rate transfer standard must connect without leaks to the inlet of the sampler and measure the flow rate of the total air sample.

7.8.6 The flow rate transfer standard must include a means to vary the sampler flow rate over the range of 1.0 to 1.8 m^3/min (35–64 ft^3/min) by introducing various levels of flow resistance between the sampler and the transfer standard inlet.

7.8.7 The conventional type of flow transfer standard consists of: An orifice unit with adapter that connects to the inlet of the sampler, a manometer or other device to measure orifice pressure drop, a means to vary the flow through the sampler unit, a thermometer to measure the ambient temperature, and a barometer to measure ambient pressure. Two such devices are shown in Figures 2a and 2b. Figure 2a shows multiple fixed resistance plates, which necessitate disassembly of the unit each time the flow resistance is changed. A preferable design, illustrated in Figure 2b, has a variable flow restriction that can be adjusted externally without disassembly of the unit. Use of a conventional, orifice-type transfer standard is assumed in the calibration procedure (Section 9). However, the use of other types of transfer standards meeting the above specifications, such as the one shown in Figure 2c, may be approved; see the note following Section 9.1.

7.9 *Filter conditioning environment*

7.9.1 *Controlled temperature:* between 15° and 30° C with less than ±3° C variation during equilibration period.

7.9.2 *Controlled humidity:* Less than 50 percent relative humidity, constant within ±5 percent.

7.10 *Analytical balance.*

7.10.1 *Sensitivity:* 0.1 mg.

7.10.2 Weighing chamber designed to accept an unfolded 20.3 x 25.4 cm (8 x 10 in) filter.

7.11 *Area light source,* similar to X-ray film viewer, to backlight filters for visual inspection.

7.12 *Numbering device,* capable of printing identification numbers on the filters before they are placed in the filter conditioning environment, if not numbered by the supplier.

8.0 *Procedure.*

(See References 1 and 2 for quality assurance information.)

8.1 Number each filter, if not already numbered, near its edge with a unique identification number.

8.2 Backlight each filter and inspect for pinholes, particles, and other imperfections; filters with visible imperfections must not be used.

8.3 Equilibrate each filter in the conditioning environment for at least 24-hr.

8.4 Following equilibration, weigh each filter to the nearest milligram and record this tare weight (W_i) with the filter identification number.

8.5 Do not bend or fold the filter before collection of the sample.

8.6 Open the shelter and install a numbered, preweighed filter in the sampler, following the sampler manufacturer's instructions. During inclement weather, precautions must be taken while changing filters to prevent damage to the clean filter and loss of sample from or damage to the exposed filter. Filter cassettes that can be loaded and unloaded in the laboratory may be used to minimize this problem (See Section 6.6).

8.7 Close the shelter and run the sampler for at least 5 min to establish run-temperature conditions.

8.8 Record the flow indicator reading and, if needed, the barometric pressure (P_3) and the ambient temperature (T_3) see NOTE following step 8.12). Stop the sampler. Determine the sampler flow rate (see Section 10.1); if it is outside the acceptable range (1.1 to 1.7 m^3/min [39–60 ft^3/min]), use a different filter, or adjust the sampler flow rate. Warning: Substantial flow adjustments may affect the

calibration of the orifice-type flow indicators and may necessitate recalibration.

8.9 Record the sampler identification information (filter number, site location or identification number, sample date, and starting time).

8.10 Set the timer to start and stop the sampler such that the sampler runs 24-hrs, from midnight to midnight (local time).

8.11 As soon as practical following the sampling period, run the sampler for at least 5 min to again establish run-temperature conditions.

8.12 Record the flow indicator reading and, if needed, the barometric pressure (P_3) and the ambient temperature (T_3).

NOTE: No onsite pressure or temperature measurements are necessary if the sampler flow indicator does not require pressure or temperature corrections (e.g., a mass flowmeter) or if average barometric pressure and seasonal average temperature for the site are incorporated into the sampler calibration (see step 9.3.9). For individual pressure and temperature corrections, the ambient pressure and temperature can be obtained by onsite measurements or from a nearby weather station. Barometric pressure readings obtained from airports must be station pressure, not corrected to sea level, and may need to be corrected for differences in elevation between the sampler site and the airport. For samplers having flow recorders but not constant flow controllers, the average temperature and pressure at the site *during the sampling period* should be estimated from weather bureau or other available data.

8.13 Stop the sampler and carefully remove the filter, following the sampler manufacturer's instructions. Touch only the outer edges of the filter. See the precautions in step 8.6.

8.14 Fold the filter in half lengthwise so that only surfaces with collected particulate matter are in contact and place it in the filter holder (glassine envelope or manila folder).

8.15 Record the ending time or elapsed time on the filter information record, either from the stop set-point time, from an elapsed time indicator, or from a continuous flow record. The sample period must be 1,440 ± 60 min. for a valid sample.

8.16 Record on the filter information record any other factors, such as meteorological conditions, construction activity, fires or dust storms, etc., that might be pertinent to the measurement. If the sample is known to be defective, void it at this time.

8.17 Equilibrate the exposed filter in the conditioning environment for at least 24-hrs.

8.18 Immediately after equilibration, reweigh the filter to the nearest milligram and record the gross weight with the filter identification number. See Section 10 for TSP concentration calculations.

9.0 *Calibration.*

9.1 Calibration of the high volume sampler's flow indicating or control device is necessary to establish traceability of the field measurement to a primary standard via a flow rate transfer standard. Figure 3a illustrates the certification of the flow rate transfer standard and Figure 3b illustrates its use in calibrating a sampler flow indicator. Determination of the corrected flow rate from the sampler flow indicator, illustrated in Figure 3c, is addressed in Section 10.1

NOTE: The following calibration procedure applies to a conventional orifice-type flow transfer standard and an orifice-type flow indicator in the sampler (the most common types). For samplers using a pressure recorder having a square-root scale, 3 other acceptable calibration procedures are provided in Reference 12. Other types of transfer standards may be used if the manufacturer or user provides an appropriately modified calibration procedure that has been approved by EPA under Section 2.8 of appendix C to part 58 of this chapter.

9.2 *Certification of the flow rate transfer standard.*

9.2.1 *Equipment required:* Positive displacement standard volume meter traceable to the National Bureau of Standards (such as a Roots meter or equivalent), stop-watch, manometer, thermometer, and barometer.

9.2.2 Connect the flow rate transfer standard to the inlet of the standard volume meter. Connect the manometer to measure the pressure at the inlet of the standard volume meter. Connect the orifice manometer to the pressure tap on the transfer standard. Connect a high-volume air pump (such as a high-volume sampler blower) to the outlet side of the standard volume meter. See Figure 3a.

9.2.3 Check for leaks by temporarily clamping both manometer lines (to avoid fluid loss) and blocking the orifice with a large-diameter rubber stopper, wide cellophane tape, or other suitable means. Start the high-volume air pump and note any change in the standard volume meter reading. The reading should remain constant. If the reading changes, locate any leaks by listening for a whistling sound and/or retightening all connections, making sure that all gaskets are properly installed.

9.2.4 After satisfactorily completing the leak check as described above, unclamp both manometer lines and zero both manometers.

9.2.5 Achieve the appropriate flow rate through the system, either by means of the variable flow resistance in the transfer standard or by varying the voltage to the air pump. (Use of resistance plates as shown in Figure 1a is discouraged because the above leak check must be repeated each time a new resistance plate is installed.) At least five

different but constant flow rates, evenly distributed, with at least three in the specified flow rate interval (1.1 to 1.7 m^3/min [39–60 ft^3/min]), are required.

9.2.6 Measure and record the certification data on a form similar to the one illustrated in Figure 4 according to the following steps.

9.2.7 Observe the barometric pressure and record as P_1 (item 8 in Figure 4).

9.2.8 Read the ambient temperature in the vicinity of the standard volume meter and record it as T_1 (item 9 in Figure 4).

9.2.9 Start the blower motor, adjust the flow, and allow the system to run for at least 1 min for a constant motor speed to be attained.

9.2.10 Observe the standard volume meter reading and simultaneously start a stopwatch. Record the initial meter reading (V_i) in column 1 of Figure 4.

9.2.11 Maintain this constant flow rate until at least 3 m^3 of air have passed through the standard volume meter. Record the standard volume meter inlet pressure manometer reading as ΔP (column 5 in Figure 4), and the orifice manometer reading as ΔH (column 7 in Figure 4). Be sure to indicate the correct units of measurement.

9.2.12 After at least 3 m^3 of air have passed through the system, observe the standard volume meter reading while simultaneously stopping the stopwatch. Record the final meter reading (V_f) in column 2 and the elapsed time (t) in column 3 of Figure 4.

9.2.13 Calculate the volume measured by the standard volume meter at meter conditions of temperature and pressures as $V_m = V_f - V_i$. Record in column 4 of Figure 4.

9.2.14 Correct this volume to standard volume (std m^3) as follows:

$$V_{std} = V_m \frac{P_1 - \Delta P}{P_{std}} \frac{T_{std}}{T_1}$$

where:

V_{std}=standard volume, std m^3;

V_m=actual volume measured by the standard volume meter;

P_1=barometric pressure during calibration, mm Hg or kPa;

ΔP=differential pressure at inlet to volume meter, mm Hg or kPa;

P_{std}=760 mm Hg or 101 kPa;

T_{std}=298 K;

T_1=ambient temperature during calibration, K.

Calculate the standard flow rate (std m^3/min) as follows:

$$Q_{std} = \frac{V_{std}}{t}$$

where:

Q_{std}=standard volumetric flow rate, std m^3/min

t=elapsed time, minutes.

Record Q_{std} to the nearest 0.01 std m^3/min in column 6 of Figure 4.

9.2.15 Repeat steps 9.2.9 through 9.2.14 for at least four additional constant flow rates, evenly spaced over the approximate range of 1.0 to 1.8 std m^3/min (35–64 ft^3/min).

9.2.16 For each flow, compute

$$\sqrt{\Delta\Delta H\ (P_1/P_{std})(298/T_1)}$$

(column 7a of Figure 4) and plot these value against Q_{std} as shown in Figure 3a. Be sure to use consistent units (mm Hg or kPa) for barometric pressure. Draw the orifice transfer standard certification curve or calculate the linear least squares slope (m) and intercept (b) of the certification curve:

$$\sqrt{\Delta\Delta H\ (P_1/P_{std})(298/T_1)}$$

$=mQ_{std}+b$. See Figures 3 and 4. A certification graph should be readable to 0.02 std m^3/min.

9.2.17 Recalibrate the transfer standard annually or as required by applicable quality control procedures. (See Reference 2.)

9.3 *Calibration of sampler flow indicator.*

NOTE: For samplers equipped with a flow controlling device, the flow controller must be disabled to allow flow changes during calibration of the sampler's flow indicator, or the alternate calibration of the flow controller given in 9.4 may be used. For samplers using an orifice-type flow indicator downstream of the motor, do not vary the flow rate by adjusting the voltage or power supplied to the sampler.

9.3.1 A form similar to the one illustrated in Figure 5 should be used to record the calibration data.

9.3.2 Connect the transfer standard to the inlet of the sampler. Connect the orifice manometer to the orifice pressure tap, as illustrated in Figure 3b. Make sure there are no leaks between the orifice unit and the sampler.

9.3.3 Operate the sampler for at least 5 minutes to establish thermal equilibrium prior to the calibration.

9.3.4 Measure and record the ambient temperature, T_2, and the barometric pressure, P_2, during calibration.

9.3.5 Adjust the variable resistance or, if applicable, insert the appropriate resistance plate (or no plate) to achieve the desired flow rate.

9.3.6 Let the sampler run for at least 2 min to re-establish the run-temperature conditions. Read and record the pressure drop across the orifice (ΔH) and the sampler flow rate indication (I) in the appropriate columns of Figure 5.

9.3.7 Calculate $\sqrt{\Delta H(P_2/P_{std})(298/T_2)}$ and determine the flow rate at standard conditions

(Q_{std}) either graphically from the certification curve or by calculating Q_{std} from the least square slope and intercept of the transfer standard's transposed certification curve: $Q_{std}=1/m\ \sqrt{\Delta H(P_2/P_{std})(298/T_2)}-b$. Record the value of Q_{std} on Figure 5.

9.3.8 Repeat steps 9.3.5, 9.3.6, and 9.3.7 for several additional flow rates distributed over a range that includes 1.1 to 1.7 std m^3/min.

9.3.9 Determine the calibration curve by plotting values of the appropriate expression involving I, selected from Table 1, against Q_{std}. The choice of expression from Table 1 depends on the flow rate measurement device used (see Section 7.4.1) and also on whether the calibration curve is to incorporate geographic average barometric pressure (P_a) and seasonal average temperature (T_a) for the site to approximate actual pressure and temperature. Where P_a and T_a can be determined for a site for a seasonal period such that the actual barometric pressure and temperature at the site do not vary by more than ±60 mm Hg (8 kPa) from P_a or ±15° C from T_a, respectively, then using P_a and T_a avoids the need for subsequent pressure and temperature calculation when the sampler is used. The geographic average barometric pressure (P_a) may be estimated from an altitude-pressure table or by making an (approximate) elevation correction of −26 mm Hg (−3.46 kPa) for each 305 m (1,000 ft) above sea level (760 mm Hg or 101 kPa). The seasonal average temperature (T_a) may be estimated from weather station or other records. Be sure to use consistent units (mm Hg or kPa) for barometric pressure.

9.3.10 Draw the sampler calibration curve or calculate the linear least squares slope (m), intercept (b), and correlation coefficient of the calibration curve: [Expression from Table 1]= $mQ_{std}+b$. See Figures 3 and 5. Calibration curves should be readable to 0.02 std m^3/min.

9.3.11 For a sampler equipped with a flow controller, the flow controlling mechanism should be re-enabled and set to a flow near the lower flow limit to allow maximum control range. The sample flow rate should be verified at this time with a clean filter installed. Then add two or more filters to the sampler to see if the flow controller maintains a constant flow; this is particularly important at high altitudes where the range of the flow controller may be reduced.

9.4 Alternate calibration of flow-controlled samplers. A flow-controlled sampler may be calibrated solely at its controlled flow rate, provided that previous operating history of the sampler demonstrates that the flow rate is stable and reliable. In this case, the flow indicator may remain uncalibrated but should be used to indicate any relative change between initial and final flows, and the sampler should be recalibrated more often to minimize potential loss of samples because of controller malfunction.

9.4.1 Set the flow controller for a flow near the lower limit of the flow range to allow maximum control range.

9.4.2 Install a clean filter in the sampler and carry out steps 9.3.2, 9.3.3, 9.3.4, 9.3.6, and 9.3.7.

9.4.3 Following calibration, add one or two additional clean filters to the sampler, reconnect the transfer standard, and operate the sampler to verify that the controller maintains the same calibrated flow rate; this is particularly important at high altitudes where the flow control range may be reduced.

TABLE 1. EXPRESSIONS FOR PLOTTING SAMPLER CALIBRATION CURVES

Type of sampler flow rate measuring device	Expression: For actual pressure and temperature corrections	Expression: For incorporation of geographic average pressure and seasonal average temperature
Mass flowmeter	I	I
Orifice and pressure indicator	$\sqrt{I\left(\frac{P_2}{P_{std}}\right)\left(\frac{298}{T_2}\right)}$	$\sqrt{I\left(\frac{P_2}{P_a}\right)\left(\frac{T_a}{T_2}\right)}$
Rotameter, or orifice and pressure recorder having square root scale*	$I\sqrt{\left(\frac{P_2}{P_{std}}\right)\left(\frac{298}{T_2}\right)}$	$I\sqrt{\left(\frac{P_2}{P_a}\right)\left(\frac{T_a}{T_2}\right)}$

*This scale is recognizable by its nonuniform divisions and is the most commonly available for high-volume samplers.

TABLE 2. EXPRESSIONS FOR DETERMINING FLOW RATE DURING SAMPLER OPERATION

Type of sampler flow rate measuring device	Expression: For actual pressure and temperature corrections	Expression: For use when geographic average pressure and seasonal average temperature have been incorporated into the sampler calibration
Mass flowmeter	I	I
Orifice and pressure indicator	$\sqrt{I\left(\frac{P_3}{P_{std}}\right)\left(\frac{298}{T_3}\right)}$	$\sqrt{I}$
Rotameter, or orifice and pressure recorder having square root scale*	$I\sqrt{\left(\frac{P_3}{P_{std}}\right)\left(\frac{298}{T_3}\right)}$	I

*This scale is recognizable by its nonuniform divisions and is the most commonly available for high-volume samplers.

10.0 *Calculations of TSP Concentration.*

10.1 Determine the average sampler flow rate during the sampling period according to either 10.1.1 or 10.1.2 below.

10.1.1 For a sampler without a continuous flow recorder, determine the appropriate expression to be used from Table 2 corresponding to the one from Table 1 used in step 9.3.9. Using this appropriate expression, determine Q_{std} for the initial flow rate from the sampler calibration curve, either graphically or from the transposed regression equation:

$Q_{std} =$

1/m ([Appropriate expression from Table 2] − b)

Similarly, determine Q_{std} from the final flow reading, and calculate the average flow Q_{std} as one-half the sum of the initial and final flow rates.

10.1.2 For a sampler with a continuous flow recorder, determine the average flow rate device reading, I, for the period. Determine the appropriate expression from Table 2 corresponding to the one from Table 1 used in step 9.3.9. Then using this expression and the average flow rate reading, determine Q_{std} from the sampler calibration curve, either graphically or from the transposed regression equation:

Q_{std} =

1/m ([Appropriate expression from Table 2] − b)

If the trace shows substantial flow change during the sampling period, greater accuracy may be achieved by dividing the sampling period into intervals and calculating an average reading before determining Q_{std}.

10.2 Calculate the total air volume sampled as:

$V - Q_{std} \times t$

where:

V=total air volume sampled, in standard volume units, std m^3/;

Q_{std}=average standard flow rate, std m^3/min;

t=sampling time, min.

10.3 Calculate and report the particulate matter concentration as:

$$TSP = \frac{(W_f - W_i) \times 10^6}{V}$$

where:

TSP=mass concentration of total suspended particulate matter, µg/std m^3;

W_i=initial weight of clean filter, g;

W_f=final weight of exposed filter, g;

V=air volume sampled, converted to standard conditions, std m^3,

10^6=conversion of g to µg.

10.4 If desired, the actual particulate matter concentration (see Section 2.2) can be calculated as follows:

$(TSP)_a = TSP\ (P_3/P_{std})(298/T_3)$

where:

$(TSP)_a$=actual concentration at field conditions, µg/m^3;

TSP=concentration at standard conditions, µg/std m^3;

P_3=average barometric pressure during sampling period, mm Hg;

P_{std}=760 mn Hg (or 101 kPa);

T_3=average ambient temperature during sampling period, K.

11.0 *References.*

1. Quality Assurance Handbook for Air Pollution Measurement Systems, Volume I, Principles. EPA–600/9–76–005, U.S. Environmental Protection Agency, Research Triangle Park, NC 27711, 1976.

2. Quality Assurance Handbook for Air Pollution Measurement Systems, Volume II, Ambient Air Specific Methods. EPA–600/4–77–027a, U.S. Environmental Protection Agency, Research Triangle Park, NC 27711, 1977.

3. Wedding, J. B., A. R. McFarland, and J. E. Cernak. Large Particle Collection Characteristics of Ambient Aerosol Samplers. Environ. Sci. Technol. *11*:387–390, 1977.

4. McKee, H. C., et al. Collaborative Testing of Methods to Measure Air Pollutants, I. The High-Volume Method for Suspended Particulate Matter. J. Air Poll. Cont. Assoc., 22 (342), 1972.

5. Clement, R. E., and F. W. Karasek. Sample Composition Changes in Sampling and Analysis of Organic Compounds in Aerosols. The Intern. J. Environ. Anal. Chem., 7:109, 1979.

6. Lee, R. E., Jr., and J. Wagman. A Sampling Anomaly in the Determination of Atmospheric Sulfuric Concentration. Am. Ind. Hygiene Assoc. J., 27:266, 1966.

7. Appel, B. R., et al. Interference Effects in Sampling Particulate Nitrate in Ambient Air. Atmospheric Environment, 13:319, 1979.

8. Tierney, G. P., and W. D. Conner. Hygroscopic Effects on Weight Determinations of Particulates Collected on Glass-Fiber Filters. Am. Ind. Hygiene Assoc. J., 28:363, 1967.

9. Chahal, H. S., and D. J. Romano. High-Volume Sampling Effect of Windborne Particulate Matter Deposited During Idle Periods. J. Air Poll. Cont. Assoc., Vol. 26 (885), 1976.

10. Patterson, R. K. Aerosol Contamination from High-Volume Sampler Exhaust. J. Air Poll. Cont. Assoc., Vol. 30 (169), 1980.

11. EPA Test Procedures for Determining pH and Integrity of High-Volume Air Filters. QAD/M–80.01. Available from the Methods Standardization Branch, Quality Assurance Division, Environmental Monitoring Systems Laboratory (MD–77), U.S. Environmental Protection Agency, Research Triangle Park, NC 27711, 1980.

12. Smith, F., P. S. Wohlschlegel, R. S. C. Rogers, and D. J. Mulligan. Investigation of Flow Rate Calibration Procedures Associated with the High-Volume Method for Determination of Suspended Particulates. EPA–600/4–78–047, U.S. Environmental Protection Agency, Research Triangle Park, NC, June 1978.

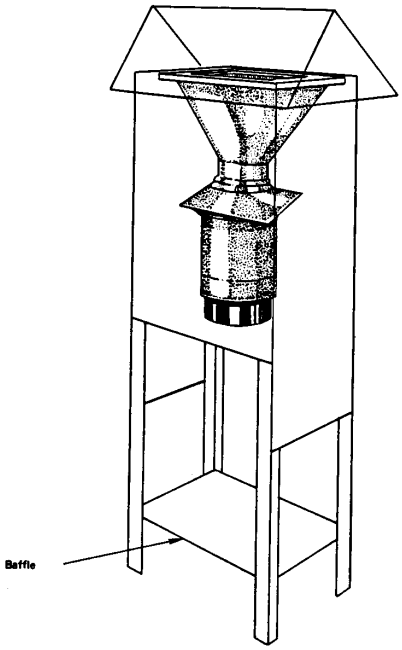

Figure 1. High-volume sampler in shelter.

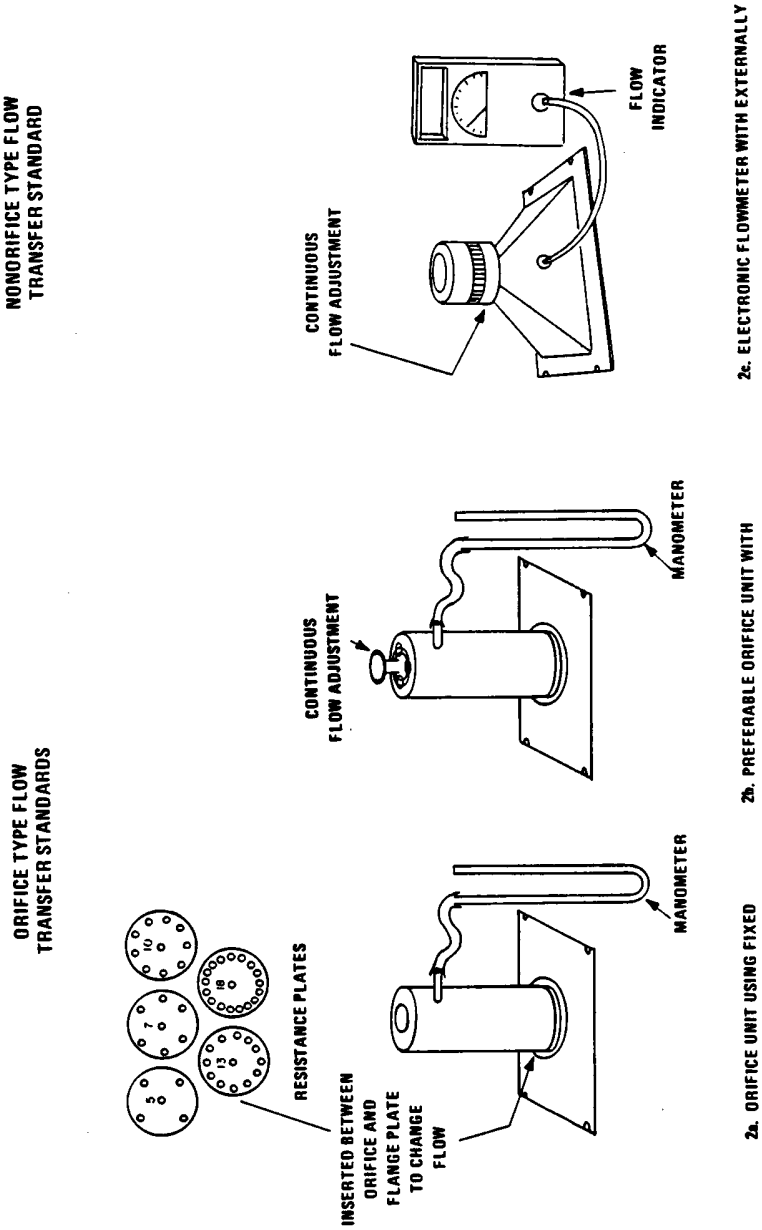

Figure 2. Various types of flow transfer standards. Note that all devices are designed to mount to the filter inlet area of the sampler.

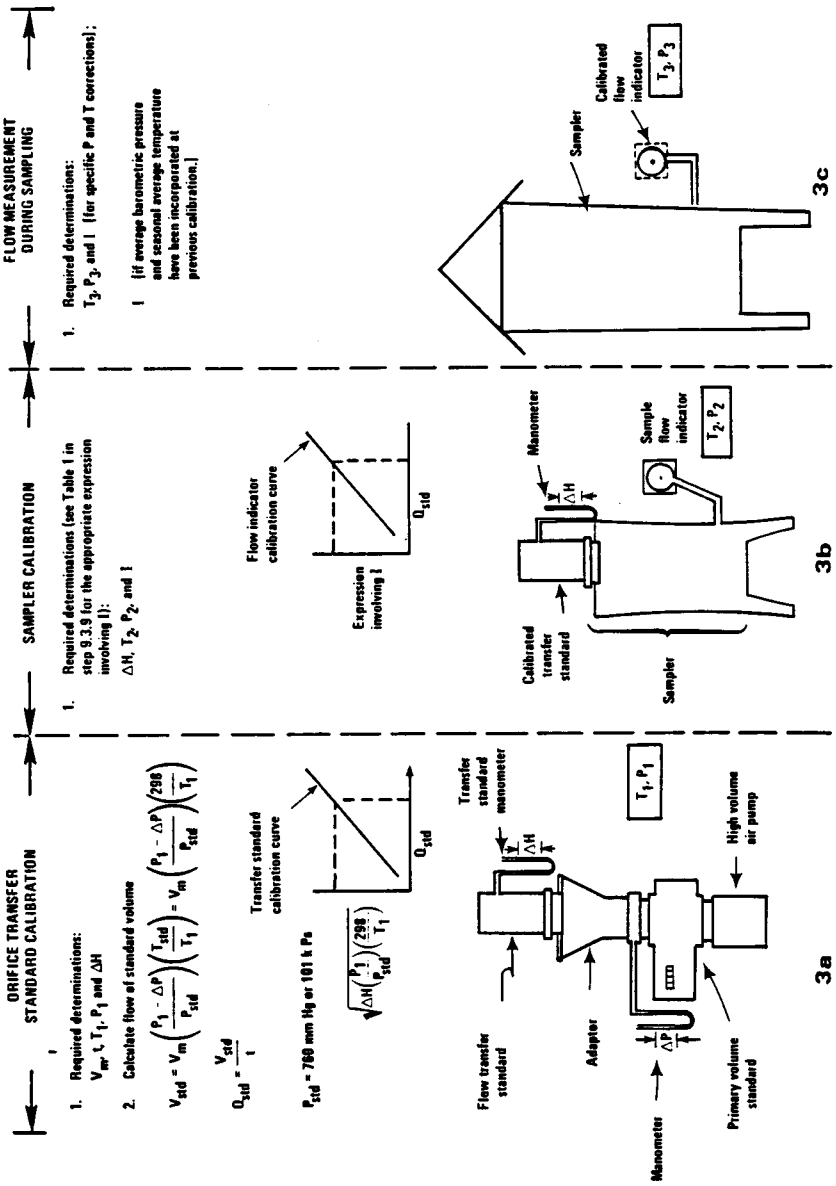

Figure 3. Illustration of the 3 steps in the flow measurement process.

ORIFICE TRANSFER STANDARD CERTIFICATION WORKSHEET

	(1)	(2)	(3)	(4)	(5)	(6)	(7)	(7a)
Run No.	Meter reading start V_i (m^3)	Meter reading stop V_f (m^3)	Sampling time t (min)	Volume measured V_m (m^3)	Differential pressure (at inlet to volume meter) ΔP (mm Hg or kPa)	(X) Flow rate Q_{std} (std m^3/min)	Pressure drop across orifice ΔH ☐ (in) or ☐ (cm) of water	(Y) $\sqrt{\Delta H\left(\frac{P_1}{P_{std}}\right)\left(\frac{298}{T_1}\right)}$
1								
2								
3								
4								
5								
6								

RECORDED CALIBRATION DATA

Standard volume meter no. _____

Transfer standard type: ☐ orifice ☐ other

Model No. _____ Serial No. _____

(8) P_1: _____ mm Hg (or kPa) (10) P_{std}: 760 mm Hg (or 101 kPa)

(9) T_1: _____ K (11) T_{std}: 298 K

Calibration performed by: _____

Date: _____

CALCULATION EQUATIONS

(1) $V_m = V_f - V_i$

(2) $V_{std} = V_m\left(\frac{P_1 - \Delta P}{P_{std}}\right)\left(\frac{T_{std}}{T_1}\right)$

(3) $Q_{std} = \frac{V_{std}}{t}$

LEAST SQUARES CALCULATIONS

Linear (Y = mX + b) regression equation of $Y = \sqrt{\Delta H(P_1/P_{std})(298/T_1)}$ on $X = Q_{std}$ for Orifice Calibration Unit (i.e., $\sqrt{\Delta H(P_1/P_{std})(298/T_1)} = mQ_{std} + b$)

Slope (m) = _____ Intercept (b) = _____ Correlation coefficient (r) = _____

To use for subsequent calibration: $X = \frac{1}{m}(Y-b)$; $\boxed{Q_{std} = \frac{1}{m}\left(\sqrt{\Delta H\left(\frac{P_2}{P_{std}}\right)\left(\frac{298}{T_2}\right)} - b\right)}$

Figure 4. Example of orifice transfer standard certification worksheet.

HIGH-VOLUME AIR SAMPLER CALIBRATION WORKSHEET

Site Location: _____

Date: _____ Barometric Pressure, P_2 mm Hg (or kPa) _____

Calibrated By: _____ Temperature, T_2 (K) _____

Sampler No. _____ Serial No. _____

Transfer std. type: _____ Serial No. _____

P_{std} = 760 mm Hg (or 101 kPa)

Optional:

Average barometric pressure: P_a = _____

Seasonal average temperature: T_a = _____

No.	ΔH Pressure drop across orifice ☐(in) or ☐(cm) of water	$\sqrt{\Delta H\left(\frac{P_2}{P_{std}}\right)\left(\frac{298}{T_2}\right)}$	(X) Q_{std} (from orifice certification) std m^3/min	I Sampler flow rate indication (arbitrary)	(Y) For specific pressure and temperature corrections (see Table 1)	(Y) For incorporation of average pressure and seasonal average temperature (see Table 1)
					☐ I or ☐ $\sqrt{I\left(\frac{P_2}{P_{std}}\right)\left(\frac{298}{T_2}\right)}$ or ☐ $I\sqrt{\left(\frac{P_2}{P_{std}}\right)\left(\frac{298}{T_2}\right)}$	☐ I or ☐ $\sqrt{I\left(\frac{P_2}{P_a}\right)\left(\frac{T_a}{T_2}\right)}$ or ☐ $I\sqrt{\left(\frac{P_2}{P_a}\right)\left(\frac{T_a}{T_2}\right)}$
1						
2						
3						
4						
5						
6						

LEAST SQUARES CALCULATIONS

Linear regression of Y on X: Y = mX + b; Y = appropriate expression from Table 1; X = Q_{std}.

Slope (m) = ____ Intercept (b) = ____ Correlation Coeff. (r) = _____

To determine subsequent flow rate during use: $X = \frac{1}{m}(Y-b)$; $Q_{std} = \frac{1}{m}$ ([appropriate expression from Table 2] - b)

Figure 5. Example of high-volume air sampler calibration worksheet.

APPENDIX C TO PART 50—MEASUREMENT PRINCIPLE AND CALIBRATION PROCEDURE FOR THE MEASUREMENT OF CARBON MONOXIDE IN THE ATMOSPHERE (NON-DISPERSIVE INFRARED PHOTOMETRY)

Measurement Principle

1. Measurements are based on the absorption of infrared radiation by carbon monoxide (CO) in a non-dispersive photometer. Infrared energy from a source is passed through a cell containing the gas sample to be analyzed, and the quantitative absorption of energy by CO in the sample cell is measured by a suitable detector. The photometer is sensitized to CO by employing CO gas in either the detector or in a filter cell in the optical path, thereby limiting the measured absorption to one or more of the characteristic wavelengths at which CO strongly absorbs. Optical filters or other means may also be used to limit sensitivity of the photometer to a narrow band of interest. Various schemes may be used to provide a suitable zero reference for the photometer. The measured absorption is converted to an electrical output signal, which is related to the concentration of CO in the measurement cell.

2. An analyzer based on this principle will be considered a reference method only if it has been designated as a reference method in accordance with part 53 of this chapter.

3. Sampling considerations.

The use of a particle filter on the sample inlet line of an NDIR CO analyzer is optional and left to the discretion of the user or the manufacturer. Use of filter should depend on the analyzer's susceptibility to interference, malfunction, or damage due to particles.

Calibration Procedure

1. *Principle.* Either of two methods may be used for dynamic multipoint calibration of CO analyzers:

(1) One method uses a single certified standard cylinder of CO, diluted as necessary with zero air, to obtain the various calibration concentrations needed.

(2) The other method uses individual certified standard cylinders of CO for each concentration needed. Additional information on calibration may be found in Section 2.0.9 of Reference 1.

2. *Apparatus.* The major components and typical configurations of the calibration systems for the two calibration methods are shown in Figures 1 and 2.

2.1 Flow controller(s). Device capable of adjusting and regulating flow rates. Flow rates for the dilution method (Figure 1) must be regulated to ± 1%.

2.2 Flow meter(s). Calibrated flow meter capable of measuring and monitoring flow rates. Flow rates for the dilution method (Figure 1) must be measured with an accuracy of ± 2% of the measured value.

2.3 Pressure regulator(s) for standard CO cylinder(s). Regulator must have nonreactive diaphragm and internal parts and a suitable delivery pressure.

2.4 Mixing chamber. A chamber designed to provide thorough mixing of CO and diluent air for the dilution method.

2.5 Output manifold. The output manifold should be of sufficient diameter to insure an insignificant pressure drop at the analyzer connection. The system must have a vent designed to insure atmospheric pressure at the manifold and to prevent ambient air from entering the manifold.

3. *Reagents.*

3.1 CO concentration standard(s). Cylinder(s) of CO in air containing appropriate concentrations(s) of CO suitable for the selected operating range of the analyzer under calibration; CO standards for the dilution method may be contained in a nitrogen matrix if the zero air dilution ratio is not less than 100:1. The assay of the cylinder(s) must be traceable either to a National Bureau of Standards (NBS) CO in air Standard Reference Material (SRM) or to an NBS/EPA-approved commercially available Certified Reference Material (CRM). CRM's are described in Reference 2, and a list of CRM sources is available from the address shown for Reference 2. A recommended protocol for certifying CO gas cylinders against either a CO SRM or a CRM is given in Reference 1. CO gas cylinders should be recertified on a regular basis as determined by the local quality control program.

3.2 Dilution gas (zero air). Air, free of contaminants which will cause a detectable response on the CO analyzer. The zero air should contain <0.1 ppm CO. A procedure for generating zero air is given in Reference 1.

4. *Procedure Using Dynamic Dilution Method.*

4.1 Assemble a dynamic calibration system such as the one shown in Figure 1. All calibration gases including zero air must be introduced into the sample inlet of the analyzer system. For specific operating instructions refer to the manufacturer's manual.

4.2 Insure that all flowmeters are properly calibrated, under the conditions of use, if appropriate, against an authoritative standard such as a soap-bubble meter or wet-test meter. All volumetric flowrates should be corrected to 25° C and 760 mm Hg (101 kPa). A discussion on calibration of flowmeters is given in Reference 1.

4.3 Select the operating range of the CO analyzer to be calibrated.

4.4 Connect the signal output of the CO analyzer to the input of the strip chart recorder or other data collection device. All adjustments to the analyzer should be based on the appropriate strip chart or data device readings. References to analyzer responses in

the procedure given below refer to recorder or data device responses.

4.5 Adjust the calibration system to deliver zero air to the output manifold. The total air flow must exceed the total demand of the analyzer(s) connected to the output manifold to insure that no ambient air is pulled into the manifold vent. Allow the analyzer to sample zero air until a stable respose is obtained. After the response has stabilized, adjust the analyzer zero control. Offsetting the analyzer zero adjustments to +5 percent of scale is recommended to facilitate observing negative zero drift. Record the stable zero air response as Z_{CO}.

4.6 Adjust the zero air flow and the CO flow from the standard CO cylinder to provide a diluted CO concentration of approximately 80 percent of the upper range limit (URL) of the operating range of the analyzer. The total air flow must exceed the total demand of the analyzer(s) connected to the output manifold to insure that no ambient air is pulled into the manifold vent. The exact CO concentration is calculated from:

$$[CO]_{OUT} = \frac{[CO]_{STD} \times F_{CO}}{F_D + F_{CO}} \qquad (1)$$

Where:

$[CO]_{OUT}$=diluted CO concentration at the output manifold, ppm;

$[CO]_{STD}$=concentration of the undiluted CO standard, ppm;

F_{CO}=flow rate of the CO standard corrected to 25° C and 760 mm Hg, (101 kPa), L/min; and

F_D=flow rate of the dilution air corrected to 25° C and 760 mm Hg, (101 kPa), L/min.

Sample this CO concentration until a stable response is obtained. Adjust the analyzer span control to obtain a recorder response as indicated below:

Recorder response (percent scale)=

$$\frac{[CO]_{OUT}}{URL} \times 100 + Z_{CO} \qquad (2)$$

Where:

URL=nominal upper range limit of the analyzer's operating range, and

Z_{CO}=analyzer response to zero air, % scale.

If substantial adjustment of the analyzer span control is required, it may be necessary to recheck the zero and span adjustments by repeating Steps 4.5 and 4.6. Record the CO concentration and the analyzer's response.

4.7 Generate several additional concentrations (at least three evenly spaced points across the remaining scale are suggested to verify linearity) by decreasing F_{CO} or increasing F_D. Be sure the total flow exceeds the analyzer's total flow demand. For each concentration generated, calculate the exact CO concentration using Equation (1). Record the concentration and the analyzer's response for each concentration. Plot the analyzer responses versus the corresponding CO concentrations and draw or calculate the calibration curve.

5. *Procedure Using Multiple Cylinder Method.* Use the procedure for the dynamic dilution method with the following changes:

5.1 Use a multi-cylinder system such as the typical one shown in Figure 2.

5.2 The flowmeter need not be accurately calibrated, provided the flow in the output manifold exceeds the analyzer's flow demand.

5.3 The various CO calibration concentrations required in Steps 4.6 and 4.7 are obtained without dilution by selecting the appropriate certified standard cylinder.

REFERENCES

1. Quality Assurance Handbook for Air Pollution Measurement Systems, Volume II—Ambient Air Specific Methods, EPA–600/4–77–027a, U.S. Environmental Protection Agency, Environmental Monitoring Systems Laboratory, Research Triangle Park, NC 27711, 1977.

2. A procedure for Establishing Traceability of Gas Mixtures to Certain National Bureau of Standards Standard Reference Materials. EPA–600/7–81–010, U.S. Environmental Protection Agency, Environmental Monitoring Systems Laboratory (MD–77), Research Triangle Park, NC 27711, January 1981.

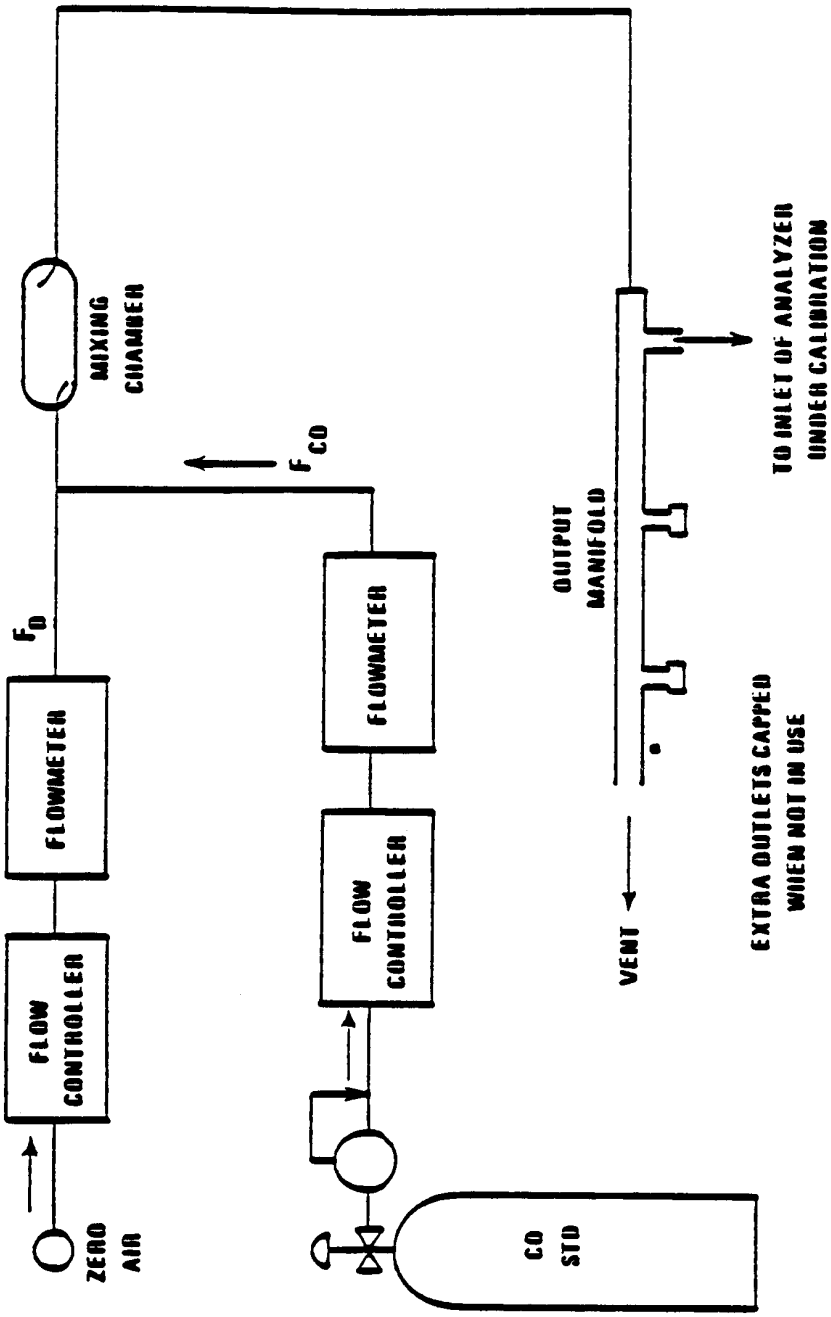

Figure 1. Dilution method for calibration of CO analyzers.

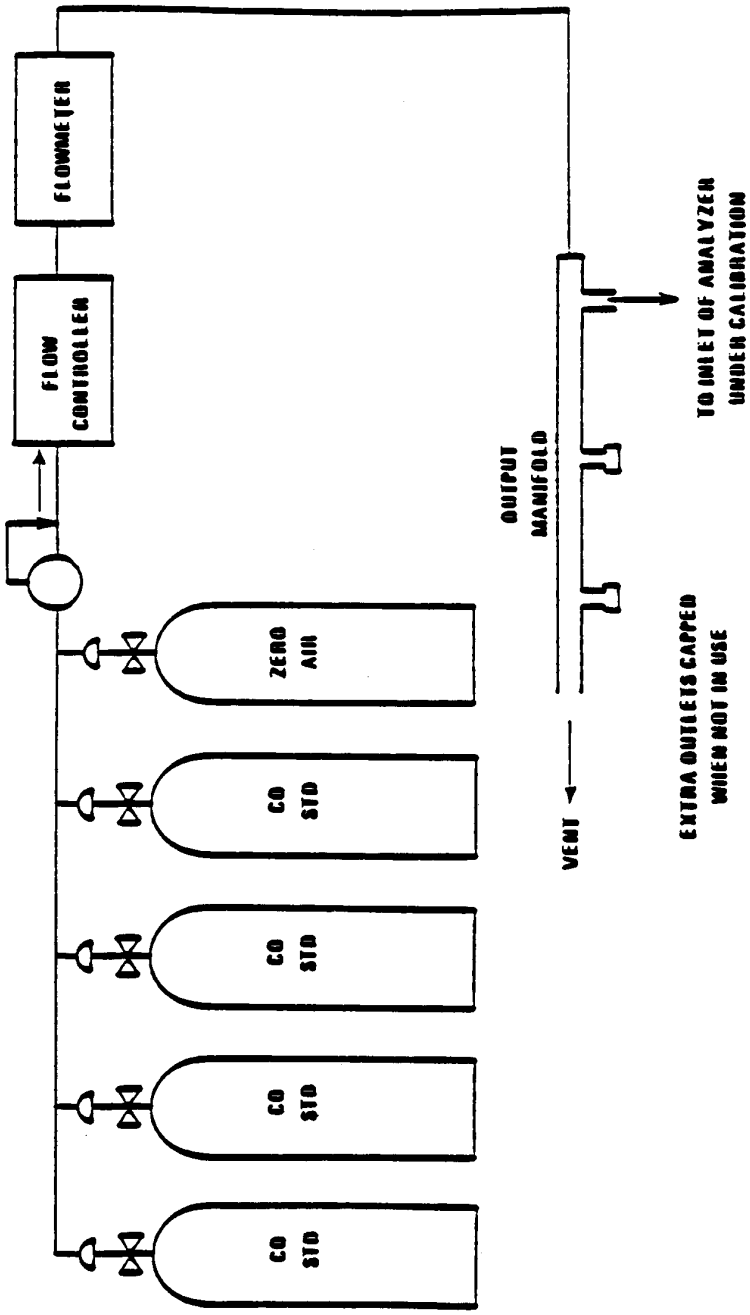

Figure 2. Multiple cylinder method for calibration of CO analyzers.

[47 FR 54922, Dec. 6, 1982; 48 FR 17355, Apr. 22, 1983]

APPENDIX D TO PART 50—MEASUREMENT PRINCIPLE AND CALIBRATION PROCEDURE FOR THE MEASUREMENT OF OZONE IN THE ATMOSPHERE

MEASUREMENT PRINCIPLE

1. Ambient air and ethylene are delivered simultaneously to a mixing zone where the ozone in the air reacts with the ethylene to emit light, which is detected by a photomultiplier tube. The resulting photocurrent is amplified and is either read directly or displayed on a recorder.

2. An analyzer based on this principle will be considered a reference method only if it has been designated as a reference method in accordance with Part 53 of this chapter and calibrated as follows:

CALIBRATION PROCEDURE

1. *Principle.* The calibration procedure is based on the photometric assay of ozone (O_3) concentrations in a dynamic flow system. The concentration of O_3 in an absorption cell is determined from a measurement of the amount of 254 nm light absorbed by the sample. This determination requires knowledge of (1) the absorption coefficient (α) of O_3 at 254 nm, (2) the optical path length (l) through the sample, (3) the transmittance of the sample at a wavelength of 254 nm, and (4) the temperature (T) and pressure (P) of the sample. The transmittance is defined as the ratio I/I_0, where I is the intensity of light which passes through the cell and is sensed by the detector when the cell contains an O_3 sample, and I_0 is the intensity of light which passes through the cell and is sensed by the detector when the cell contains zero air. It is assumed that all conditions of the system, except for the contents of the absorption cell, are identical during measurement of I and I_0. The quantities defined above are related by the Beer-Lambert absorption law,

$$\text{Transmittance} = \frac{I}{I_O} = e^{-acl} \qquad (1)$$

where:

α=absorption coefficient of O_3 at 254 nm=308±4 atm^{-1} cm^{-1} at 0°C and 760 torr.[1, 2, 3, 4, 5, 6, 7]

c=O_3 concentration in atmospheres

l=optical path length in cm

In practice, a stable O_3 generator is used to produce O_3 concentrations over the required range. Each O_3 concentration is determined from the measurement of the transmittance (I/I_0) of the sample at 254 nm with a photometer of path length l and calculated from the equation,

$$c(\text{atm}) = -\frac{1}{\alpha l}(\ln I / I_O) \qquad (2a)$$

or

$$c(\text{ppm}) = -\frac{10^6}{\alpha l}(\ln I / I_O) \qquad (2b)$$

The calculated O_3 concentrations must be corrected for O_3 losses which may occur in the photometer and for the temperature and pressure of the sample.

2. *Applicability.* This procedure is applicable to the calibration of ambient air O_3 analyzers, either directly or by means of a transfer standard certified by this procedure. Transfer standards must meet the requirements and specifications set forth in Reference 8.

3. *Apparatus.* A complete UV calibration system consists of an ozone generator, an output port or manifold, a photometer, an appropriate source of zero air, and other components as necessary. The configuration must provide a stable ozone concentration at the system output and allow the photometer to accurately assay the output concentration to the precision specified for the photometer (3.1). Figure 1 shows a commonly used configuration and serves to illustrate the calibration procedure which follows. Other configurations may require appropriate variations in the procedural steps. All connections between components in the calibration system downstream of the O_3 generator should be of glass, Teflon, or other relatively inert materials. Additional information regarding the assembly of a UV photometric calibration apparatus is given in Reference 9. For certification of transfer standards which provide their own source of O_3, the transfer standard may replace the O_3 generator and possibly other components shown in Figure 1; see Reference 8 for guidance.

3.1 *UV photometer.* The photometer consists of a low-pressure mercury discharge lamp, (optional) collimation optics, an absorption cell, a detector, and signal-processing electronics, as illustrated in Figure 1. It must be capable of measuring the transmittance, I/I_0, at a wavelength of 254 nm with sufficient precision such that the standard deviation of the concentration measurements does not exceed the greater of 0.005 ppm or 3% of the concentration. Because the low-pressure mercury lamp radiates at several wavelengths, the photometer must incorporate suitable means to assure that no O_3 is generated in the cell by the lamp, and that at least 99.5% of the radiation sensed by the detector is 254 nm radiation. (This can be readily achieved by prudent selection of optical filter and detector response characteristics.) The length of the light path through the absorption cell must be known with an accuracy of at least 99.5%. In addition, the cell and associated plumbing must be designed to minimize loss of O_3 from contact

with cell walls and gas handling components. See Reference 9 for additional information.

3.2 *Air flow controllers.* Devices capable of regulating air flows as necessary to meet the output stability and photometer precision requirements.

3.3 *Ozone generator.* Device capable of generating stable levels of O_3 over the required concentration range.

3.4 *Output manifold.* The output manifold should be constructed of glass, Teflon, or other relatively inert material, and should be of sufficient diameter to insure a negligible pressure drop at the photometer connection and other output ports. The system must have a vent designed to insure atmospheric pressure in the manifold and to prevent ambient air from entering the manifold.

3.5 *Two-way valve.* Manual or automatic valve, or other means to switch the photometer flow between zero air and the O_3 concentration.

3.6 *Temperature indicator.* Accurate to ±1°C.

3.7 *Barometer or pressure indicator.* Accurate to ±2 torr.

4. *Reagents.*

4.1 *Zero air.* The zero air must be free of contaminants which would cause a detectable response from the O_3 analyzer, and it should be free of NO, C_2H_4, and other species which react with O_3. A procedure for generating suitable zero air is given in Reference 9. As shown in Figure 1, the zero air supplied to the photometer cell for the I_0 reference measurement must be derived from the same source as the zero air used for generation of the ozone concentration to be assayed (I measurement). When using the photometer to certify a transfer standard having its own source of ozone, see Reference 8 for guidance on meeting this requirement.

5. *Procedure.*

5.1 *General operation.* The calibration photometer must be dedicated exclusively to use as a calibration standard. It should always be used with clean, filtered calibration gases, and never used for ambient air sampling. Consideration should be given to locating the calibration photometer in a clean laboratory where it can be stationary, protected from physical shock, operated by a responsible analyst, and used as a common standard for all field calibrations via transfer standards.

5.2 *Preparation.* Proper operation of the photometer is of critical importance to the accuracy of this procedure. The following steps will help to verify proper operation. The steps are not necessarily required prior to each use of the photometer. Upon initial operation of the photometer, these steps should be carried out frequently, with all quantitative results or indications recorded in a chronological record either in tabular form or plotted on a graphical chart. As the performance and stability record of the photometer is established, the frequency of these steps may be reduced consistent with the documented stability of the photometer.

5.2.1 *Instruction manual:* Carry out all set up and adjustment procedures or checks as described in the operation or instruction manual associated with the photometer.

5.2.2 *System check:* Check the photometer system for integrity, leaks, cleanliness, proper flowrates, etc. Service or replace filters and zero air scrubbers or other consumable materials, as necessary.

5.2.3 *Linearity:* Verify that the photometer manufacturer has adequately established that the linearity error of the photometer is less than 3%, or test the linearity by dilution as follows: Generate and assay an O_3 concentration near the upper range limit of the system (0.5 or 1.0 ppm), then accurately dilute that concentration with zero air and reassay it. Repeat at several different dilution ratios. Compare the assay of the original concentration with the assay of the diluted concentration divided by the dilution ratio, as follows

$$E = \frac{A_1 - A_2 / R}{A_1} \times 100\% \qquad (3)$$

where:

E=linearity error, percent
A_1=assay of the original concentration
A_2=assay of the diluted concentration
R=dilution ratio=flow of original concentration divided by the total flow

The linearity error must be less than 5%. Since the accuracy of the measured flowrates will affect the linearity error as measured this way, the test is not necessarily conclusive. Additional information on verifying linearity is contained in Reference 9.

5.2.4 *Intercomparison:* When possible, the photometer should be occasionally intercompared, either directly or via transfer standards, with calibration photometers used by other agencies or laboratories.

5.2.5 *Ozone losses:* Some portion of the O_3 may be lost upon contact with the photometer cell walls and gas handling components. The magnitude of this loss must be determined and used to correct the calculated O_3 concentration. This loss must not exceed 5%. Some guidelines for quantitatively determining this loss are discussed in Reference 9.

5.3 *Assay of O_3* concentrations.

5.3.1 Allow the photometer system to warm up and stabilizer.

5.3.2 Verify that the flowrate through the photometer absorption cell, F allows the cell to be flushed in a reasonably short period of time (2 liter/min is a typical flow). The precision of the measurements is inversely related to the time required for flushing, since the photometer drift error increases with time.

5.3.3 Insure that the flowrate into the output manifold is at least 1 liter/min greater than the total flowrate required by the photometer and any other flow demand connected to the manifold.

5.3.4 Insure that the flowrate of zero air, F_z, is at least 1 liter/min greater than the flowrate required by the photometer.

5.3.5 With zero air flowing in the output manifold, actuate the two-way valve to allow the photometer to sample first the manifold zero air, then F_z. The two photometer readings must be equal ($I=I_o$).

NOTE: In some commercially available photometers, the operation of the two-way valve and various other operations in section 5.3 may be carried out automatically by the photometer.

5.3.6 Adjust the O_3 generator to produce an O_3 concentration as needed.

5.3.7 Actuate the two-way valve to allow the photometer to sample zero air until the absorption cell is thoroughly flushed and record the stable measured value of I_o.

5.3.8 Actuate the two-way valve to allow the photometer to sample the ozone concentration until the absorption cell is thoroughly flushed and record the stable measured value of I.

5.3.9 Record the temperature and pressure of the sample in the photometer absorption cell. (See Reference 9 for guidance.)

5.3.10 Calculate the O_3 concentration from equation 4. An average of several determinations will provide better precision.

$$[O_3]_{OUT} = \left(\frac{-1}{al}\ln\frac{I}{I_O}\right)\left(\frac{T}{273}\right)\left(\frac{760)}{P}\right)\times\frac{10^6}{L} \quad (4)$$

where:

$[O_3]_{OUT}$=O_3 concentration, ppm
α=absorption coefficient of O_3 at 254 nm=308 atm^{-1} cm^{-1} at 0°C and 760 torr
l=optical path length, cm
T=sample temperature, K
P=sample pressure, torr
L=correction factor for O_3 losses from 5.2.5=(1-fraction O_3 lost).

NOTE: Some commercial photometers may automatically evaluate all or part of equation 4. It is the operator's responsibility to verify that all of the information required for equation 4 is obtained, either automatically by the photometer or manually. For ''automatic'' photometers which evaluate the first term of equation 4 based on a linear approximation, a manual correction may be required, particularly at higher O_3 levels. See the photometer instruction manual and Reference 9 for guidance.

5.3.11 Obtain additional O_3 concentration standards as necessary by repeating steps 5.3.6 to 5.3.10 or by Option 1.

5.4 *Certification of transfer standards.* A transfer standard is certified by relating the output of the transfer standard to one or more ozone standards as determined according to section 5.3. The exact procedure varies depending on the nature and design of the transfer standard. Consult Reference 8 for guidance.

5.5 *Calibration of ozone analyzers.* Ozone analyzers are calibrated as follows, using ozone standards obtained directly according to section 5.3 or by means of a certified transfer standard.

5.5.1 Allow sufficient time for the O_3 analyzer and the photometer or transfer standard to warmup and stabilize.

5.5.2 Allow the O_3 analyzer to sample zero air until a stable response is obtained and adjust the O_3 analyzer's zero control. Offsetting the analyzer's zero adjustment to +5% of scale is recommended to facilitate observing negative zero drift. Record the stable zero air response as ''Z''.

5.5.3 Generate an O_3 concentration standard of approximately 80% of the desired upper range limit (URL) of the O_3 analyzer. Allow the O_3 analyzer to sample this O_3 concentration standard until a stable response is obtained.

5.5.4 Adjust the O_3 analyzer's span control to obtain a convenient recorder response as indicated below:

recorder response (%scale) =

$$\left(\frac{[O_3]_{OUT}}{URL}\times 100\right)+Z \quad (5)$$

where:

URL=upper range limit of the O_3 analyzer, ppm
Z=recorder response with zero air, % scale

Record the O_3 concentration and the corresponding analyzer response. If substantial adjustment of the span control is necessary, recheck the zero and span adjustments by repeating steps 5.5.2 to 5.5.4.

5.5.5 Generate several other O_3 concentration standards (at least 5 others are recommended) over the scale range of the O_3 analyzer by adjusting the O_3 source or by Option 1. For each O_3 concentration standard, record the O_3 and the corresponding analyzer response.

5.5.6 Plot the O_3 analyzer responses versus the corresponding O_3 concentrations and draw the O_3 analyzer's calibration curve or calculate the appropriate response factor.

5.5.7 *Option 1:* The various O_3 concentrations required in steps 5.3.11 and 5.5.5 may be obtained by dilution of the O_3 concentration generated in steps 5.3.6 and 5.5.3. With this option, accurate flow measurements are required. The dynamic calibration system may be modified as shown in Figure 2 to allow for dilution air to be metered in downstream of the O_3 generator. A mixing chamber between the O_3 generator and the output manifold is also required. The flowrate through the O_3

generator (F_o) and the dilution air flowrate (F_D) are measured with a reliable flow or volume standard traceable to NBS. Each O_3 concentration generated by dilution is calculated from:

$$[O_3]'_{OUT} = [O_3]_{OUT}\left(\frac{F_O}{F_O + F_D}\right) \qquad (6)$$

where:

$[O_3]'_{OUT}$=diluted O_3 concentration, ppm

F_0=flowrate through the O_3 generator, liter/min

F_D=diluent air flowrate, liter/min

REFERENCES

1. E.C.Y. Inn and Y. Tanaka, ''Absorption coefficient of Ozone in the Ultraviolet and Visible Regions'', *J. Opt. Soc. Am., 43,* 870 (1953).

2. A. G. Hearn, ''Absorption of Ozone in the Ultraviolet and Visible Regions of the Spectrum'', *Proc. Phys. Soc.* (London), *78,* 932 (1961).

3. W. B. DeMore and O. Raper, ''Hartley Band Extinction Coefficients of Ozone in the Gas Phase and in Liquid Nitrogen, Carbon Monoxide, and Argon'', *J. Phys. Chem., 68,* 412 (1964).

4. M. Griggs, ''Absorption Coefficients of Ozone in the Ultraviolet and Visible Regions'', *J. Chem. Phys., 49,* 857 (1968).

5. K. H. Becker, U. Schurath, and H. Seitz, ''Ozone Olefin Reactions in the Gas Phase. 1. Rate Constants and Activation Energies'', *Int'l Jour. of Chem. Kinetics,* VI, 725 (1974).

6. M. A. A. Clyne and J. A. Coxom, ''Kinetic Studies of Oxy-halogen Radical Systems'', *Proc. Roy. Soc., A303,* 207 (1968).

7. J. W. Simons, R. J. Paur, H. A. Webster, and E. J. Bair, ''Ozone Ultraviolet Photolysis. VI. The Ultraviolet Spectrum'', *J. Chem. Phys., 59,* 1203 (1973).

8. ''Transfer Standards for Calibration of Ambient Air Monitoring Analyzers for Ozone'', EPA Publication available from EPA, Department E (MD–77), Research Triangle Park, NC 27711.

9. ''Technical Assistance Document for the Calibration of Ambient Ozone Monitors'', EPA Publication available from EPA, Department E (MD–77), Research Triangle Park, NC 27711.

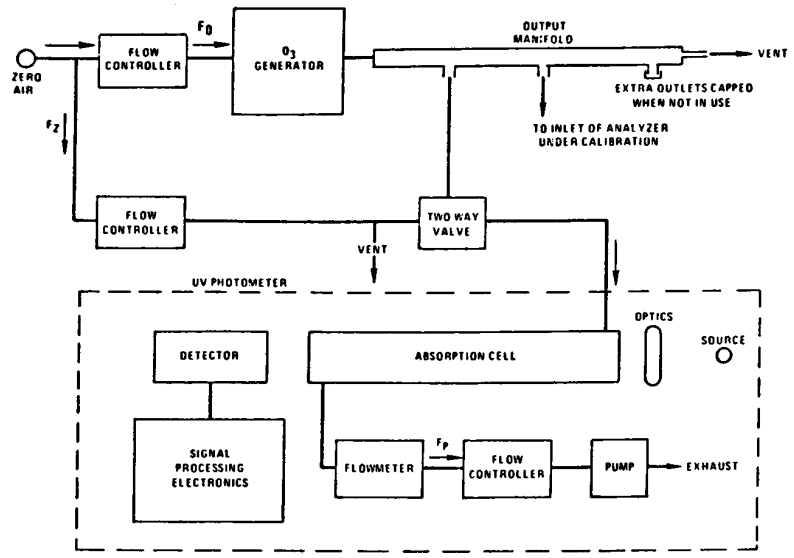

Figure 1. Schematic diagram of a typical UV photometric calibration system.

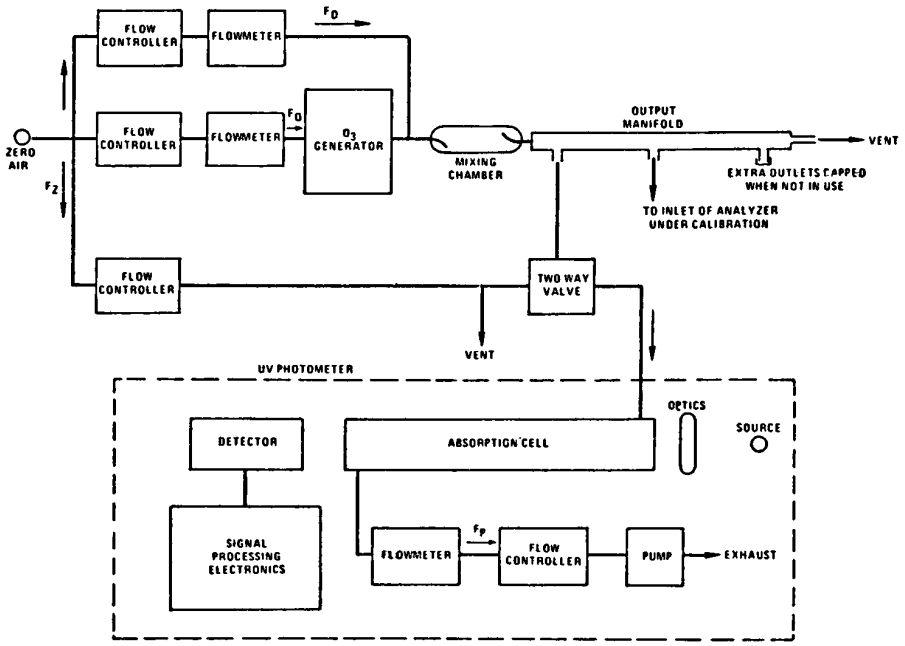

Figure 2. Schematic diagram of a typical UV photometric calibration system (OPTION 1)

Temporary Alternative Calibration procedure—(Boric Acid-Potassium Iodide). This procedure may be used as an alternative to the Ultraviolet Photometry procedure for direct calibration of ozone analyzers—but not to certify transfer standards—until [18 months after the date of final promulgation]. After that time this procedure can be used only as a transfer standard in accordance with the guidance and specifications set forth in Reference 4, ''Transfer Standards for Calibration of Ambient Air Monitoring Analyzers for Ozone''.

1. *Principle.* This calibration procedure (1) is based upon the reaction between ozone (O_3) and potassium iodide (KI) to release iodine (I_2) according to the stoichiometric equation: (2)

$$O_3 + 2I^- + 2H^+ \rightleftharpoons I_2 + H_2O + O_2 \quad (1)$$

The stoichiometry is such that the amount of I_2 released is equivalent to the amount of O_3, absorbed. Ozone is absorbed in a 0.1M boric acid (H_3BO_3) solution containing 1% KI, and the I_2 released reacts with excess iodide ion (I^-) to form triiodide ion (I^-_3) which is measured spectrophotometrically at a wavelength of 352 nm. The output of a stable O_3 generator is assayed in this manner, and the generator is immediately used to calibrate the O_3 analyzer. The O_3 generator must be used immediately after calibration and without physical movement, and it is recalibrated prior to each use. Alternatively, the O_3 analyzer may be calibrated by assaying the O_3 concentrations using the prescribed procedure while simultaneously measuring the corresponding O_3 analyzer responses. Ozone concentration standards may also be generated by an optional dilution technique. With this option, the highest O_3 concentration standard is assayed using the prescribed procedure. The additional O_3 concentration standards required are then obtained by dilution.

2. *Apparatus.* Figures 1 and 2 illustrate a typical BAKI O_3 calibration system and show the suggested configuration of the components listed below. All connections between components downstream of the O_3 generator should be of glass, Teflon or other relatively inert material.

2.1 *Air flow controller.* Device capable of maintaining a constant air flowrate through the O_3 generator within ±2%.

2.2 *Air flowmeter.* Calibrated flowmeter capable of measuring and monitoring the air flowrate through the O_3 generator within ±2%.

2.3 *Ozone generator.* Device capable of generating stable levels of O_3 over the required concentration range.

2.4 *Output manifold.* The output manifold should be constructed of glass, Teflon, or other relatively inert material and should be of sufficient diameter to insure a negligible pressure drop at the analyzer connection. The system must have a vent designed to insure atmospheric pressure in the manifold and to prevent ambient air from entering the manifold.

2.5 *Impingers.* All glass impingers with the specifications indicated in Figure 2 are recommended. The impingers may be purchased from most major glassware suppliers. Two impingers connected in series are used to insure complete collection of the sample.

2.6 *Air pump and flow controller.* Any pump and flow control device capable of maintaining a constant flowrate of 0.4–0.6 liter-min through the impingers may be used. A critical orifice as described by Lodge *et al.* (3) is recommended. The orifice should be protected against moisture and particulate matter with a membrane filter or moisture trap containing Drierite, silica gel, or glass wool. The air pump must be capable of maintaining a pressure differential of at least 0.6–0.7 atmospheres across the critical orifice. Alternatively, a needle valve could be used with the pump to adjust the flow through the impingers. A flowmeter is then recommended to monitor the flow. The needle valve-flowmeter combination should be protected against moisture and particulate matter with a membrane filter or moisture trap.

2.7 *Thermometer.* Accurate to ±1°C.

2.8 *Barometer.* Accurate to ±2 torr.

2.9 Volumetric flasks (Class A). 25, 100, 200, 500, 1000-ml.

2.10 Pipets (Class A). 1, 5, 10, 15, 20, and 25-ml volumetric; 1-ml or 10-ml graduated.

2.11 *Spectrometer.* Capable of measuring absorbance at 352 nm with an absolute accuracy of ±1% and linear response over the range of 0–1.0 absorbance units. The photometric accuracy may be checked using optical glass filters which have certified absorbance values at specified wavelengths. Matched 1-cm or 2-cm cells should be used for all absorbance determinations.

3. *Reagents.*

3.1 *Zero air.* The zero air must be free of contaminants which will cause a detectable response of the O_3 analyzer or which might react with 1% BAKI. Air meeting this requirement may be obtained by: (1) Passing it through silica gel for drying; (2) treating it with O_3 to convert any nitric oxide (NO) to nitrogen dioxide (NO_2); (3) passing it through activated charcoal (6–14 mesh) and molecular sieve (6–16 mesh, type 4A) to remove any NO_2, hydrocarbons, and traces of water vapor; and (4) passing it through a 2-micron filter to remove any particulate matter.

3.2 Boric acid (H_3BO_3), ACS reagent grade.

3.3 Potassium iodide (KI), ACS reagent grade.

3.4 Hydrogfen peroxide (H_2O_2), ACS reagent grade, 3% or 30%.

3.5 Potassium iodate (KIO_3), ACS reagent grade certified 0.1N.

3.6 Sulfuric acid (H_2SO_4), ACS reagent grade, 95% to 98%.

3.7 *Distilled water.* Used for preparation of all reagents.

3.8 *Absorbing reagent.* Dissolve 6.2 g of boric acid (H_3BO_3) in approximately 750 ml of distilled water in an amber 1000-ml volumetric flask. The flask may be heated gently to speed dissolution of the H_3BO_3, but the solution must then be cooled to room temperature or below before proceeding with the reagent preparation. [While the H_3BO_3 solution is cooling, prepare the hydrogen peroxide (H_2O_2) solution according to the directions in section 3.9.] When the H_3BO_3 solution has cooled, add 10 g of potassium iodide (KI) to the H_3BO_3 solution and dissolve. Add 1 ml of 0.0021% H_2O_2 solution (see 3.9) and mix thoroughly. Within 5 minutes after adding the peroxide, dilute to volume with distilled water, mix, and determine the absorbance of this BAKI solution at 352 nm against distilled water as the reference. The pH of the BAKI solution should be 5.1±0.2.

Set the absorbing solution aside for 2 hours and then redetermine the absorbance at 352 nm against distilled water as the reference. If the resultant absorbance from this second determination is at least 0.008 absorbance units/cm greater than the first determination, the absorbing reagent is ready for use. If no increase or an increase of less than 0.008 absorbance units/cm is observed, the KI reagent probably contains an excessive amount of a reducing contaminant and *must be discarded.* In this event, prepare fresh absorbing reagent using a different numbered lot of KI. If unacceptable absorbing reagent results from different lots of KI, test the possibility of contamination in the H_3BO_3 by using a different numbered lot of H_3BO_3.

3.9 Hydrogen peroxide solution 0.0021%. Using a graduated pipet, add 0.7 ml of 30% or 7.0 ml of 3% hydrogen peroxide (H_2O_2) to approximately 200 ml of distilled water in a 500-ml volumetric flask, dilute to volume with distilled water and mix thoroughly. To prepare the 0.0021% solution, pipet 5 ml of the above solution into 50 ml of distilled water in a 100-ml volumetric flask, dilute to volume with distilled water, and mix thoroughly. This 0.0021% H_2O_2 solution must be prepared fresh each time a fresh batch of absorbing reagent is prepared. Therefore, the remaining contents of both volumetric flasks should be discarded after treatment of the BAKI absorbing reagent (see section 3.8).

3.10 Standard potassium iodate solution (0.1N). Use a commercial standard solution of potassium iodate (KIO_3) having a certified normality.

3.11 Sulfuric acid (1N). Dilute 28 ml of concentrated (95–98%) sulfuric acid (H_2SO_4) to volume in a 1000-ml volumetric flask.

4. *Procedure.*

4.1 Assemble an ozone calibration system such as shown in Figure 1.

4.2 Assemble the KI sampling train such as shown in Figure 2. All connections between the various components must be leak tight and may be made using grease-free ball joint fittings, heat-shrinkable Teflon tubing, or Teflon tube fittings. The connection to the O_3 output manifold should be made using 6 mm (¼ in.) Teflon tubing not to exceed 1.5 meters in length.

4.3 Calibrate all flowmeters and critical orfices under the conditions of use against a reliable flow or volume standard such as a NBS traceable bubble flowmeter or wet-test meter. Correct all volumetric flowrates to 25°C and 760 torr as follows:

$$F_R = F_S \times \frac{P_S - PH_2O}{760} \times \frac{298}{T_S + 273} \qquad (2)$$

where:

F_R=flowrate corrected to reference conditions (25° C and 760 torr), liter/min

F_S=flowrate at sampling conditions, liter/min

P_S=barometric pressure at sampling conditions, torr

P_{H20}=vapor pressure of H_2 at T_S, torr (For wet volume standard. For a dry standard, P_{H20}=O)

T_S=temperature at sampling conditions, °C

4.4 KI calibration curve.

4.4.1 Prepare iodine standards, fresh when needed, as follows:

A. Accurately pipet 10 ml of 0.1N standard potassium iodate (KIO_3) solution into a 100-ml volumetric flask containing approximately 50 ml of distilled water. Add 1 g of potassium iodide (KI) and 5 ml of 1N sulfuric acid (H_2SO_4), dilute to volume with distilled water, and mix thoroughly.

B. Immediately before use, pipet 10 ml of the iodine (I_2) solution prepared in step A above into a 100-ml volumetric flask and dilute to volume with absorbing reagent. Then further dilute this solution by pipetting 10 ml of it into a 200-ml volumetric flask and diluting it to volume with absorbing reagent.

C. In turn, pipet 5, 10, 15, 20, and 25 ml aliquots of the final I_2 solution prepared in step B above into a series of 25-ml volumetric flasks. Dilute each to volume with absorbing reagent and mix thoroughly. To prevent I_2 losses by volatilization, the flasks should remain stoppered until absorbance measurements are made. Absorbance measurements (see 4.4.2) should be taken within 20 minutes after preparation of the I_2 standards.

4.4.2 Determine the absorbance of each I_2 standard at 352 nm. Also measure the absorbance of a sample of unexposed absorbing reagent. Determine the net absorbance of each I_2 standard as:

$$\text{net absorbance} = \begin{pmatrix}\text{sample}\\ \text{absorbance}\end{pmatrix} - \begin{pmatrix}\text{unexposed}\\ \text{reagent}\\ \text{absorbance}\end{pmatrix} \quad (3)$$

4.4.3 For each I_2 standard, calculate the net absorbance/cm as:

$$\text{net absorbance/cm} = \frac{\text{net absorbance}}{b} \quad (4)$$

where:

b=spectrophotometer cell path length, cm

4.4.4 For each I_2 standard, calculate the I_2 concentration in mole/liter as:

$$[I_2]_i = N_{KIO_3} \times \frac{1\,\text{equivalent } I_2}{1\,\text{equivalent } KIO_3} \times \frac{1\,\text{mole } I_2}{2\,\text{equivalent } I_2} \times \frac{10}{100} \times \frac{10}{100} \times \frac{10}{200} \times \frac{V_i}{25} \quad (5a)$$

$$[I_2]_i = N_{KIO_3} \times V_i \times 10^{-5} \quad (5b)$$

where:

$[I_2]_i$=concentration of each I_2 standard, mole I_2/liter

N_{KIO3}=normality of KIO_3 (from 3.10), equivalent liter

V_i=volume of I_2 solution (from step 4.4.1.C)=5, 10, 15, 20, or 25 ml

4.4.5 Plot net absorbance/cm (y-axis) versus the mole I_2/liter (x-axis) for each I_2 standard and draw the KI calibration curve. Calculate the slope of the curve in liter $mole^{-1}$ cm^{-1} and record as S_c. The value of the slope should be [26,000±780. If the slope is not within this range, and the photometric accuracy of the spectrophotometer meets the specifications given in 2.11, repeat the procedure using freshly prepared I_2 standards. If the slope is still not within the specified range, repeat the procedure using a different lot of certified 0.1N KIO_3 to prepare the I_2 standards.

4.5 *Calibration of the ozone generator.*

4.5.1 Adjust the air flow through the O_3 generator to the desired flowrate and record as F_0. At all times the air flow through the generator must be greater than the total flow required by the sampling systems, to assure exhaust flow at the vent.

4.5.2 With the O_3 generator off, flush the system with zero air for at least 15 minutes to remove residual O_3. Pipet 10 ml of absorbing reagent into each of 2 impingers and connect them into the sampling train as shown in Figure 2. Draw air from the output manifold of the O_3 calibration system through the sampling train at 0.4–0.6 liter/min for 10 minutes. Immediately transfer the exposed solutions to clean spectrophotometer cells. Determine the net absorbance (sample absorbance-unexposed reagent absorbance) of each solution at 352 nm within three minutes. Add the net absorbances of the two solutions to obtain the total net absorbance. Calculate the indicated O_3 concentration (system blank) as equivalent O_3 concentration according to section 4.5.4. If the system blank is greater than 0.005 ppm O_3, continue flushing the O_3 generation system for an additional 30 minutes and redetermine the system blank. If the system blank is still greater than 0.005 ppm O_3, the zero air probably contains traces of an oxidizing contaminant, and the activated charcoal and molecular sieve (see section 3.1) should be replaced.

4.5.3 Adjust the O_3 generator to generate an O_3 concentration in the range of interest and allow the system to equilibrate for about 15 minutes. The uncalibrated O_3 analyzer to be calibrated can conveniently be used to indicate the stability of the O_3 generator output. When the O_3 generator output has stabilized, pipet 10 ml of absorbing reagent into each impinger. Draw O_3 from the output manifold of the O_3 calibration system through the sampling train at 0.4–0.6 liter/min. Use a sample time of between 10 and 30 minutes such that a total net absorbance between 0.1 and 1.0 absorbance units is obtained. (At an O_3 concentration of 0.1 ppm and a sampling rate of 0.5 liter/min, a total net absorbance >0.1 absorbance units should be obtained if a sampling time of 20 minutes and 1-cm spectrophotometer cells are used.) Immediately after collection, transfer the exposed solutions to clean spectrophotometer cells. Determine the net absorbance (sample absorbance—unexposed reagent absorbance) of each solution at 352 nm within three minutes. Add the net absorbances of the two solutions to obtain the total net absorbance.

4.5.4 *Calculation of ozone concentration.*

4.5.4.1 Calculate the total volume of air sampled, corrected to reference conditions of 25°C and 760 torr as:

$$V_R = F_R \times t_s \quad (6)$$

where:

V_R=volume of air sampled, corrected to reference conditions, liter

F_R=sampling flowrate corrected to reference conditions, liter/min

t_S=sampling time, min

4.5.4.2 Calculate the I_2 released in moles as:

$$1eI_2 = \frac{\text{total net absorbance} \times 0.01}{S_C \times b} \quad (7)$$

where: Total net absorbance=sum of net absorbances for the two solutions

0.01=volume of absorbing reagent in each impinger, liter

S_c=slope of KI calibration curve, liter $mole^{-1}$ cm^{-1}

b=spectrophotometer cell path length, cm

4.5.4.3 Calculate the μl of O_3 absorbed as:

$$1\,O_3 = \text{mole}\,I_2 \times \frac{1\,\text{mole}\,O_3}{1\,\text{mole}\,I_2} \times \frac{24.47\,l\,O_3}{\text{mole}\,O_3} \times \frac{10^6\,\mu l\,O_3}{l\,O_3} \quad (8a)$$

or,

$$\mu l\,O_3 = \text{mole}\,I_2\,24.47 \times 10^6 \quad (8b)$$

4.5.4.4 Calculate the O_3 concentration in ppm as:

$$\text{ppm}\,O_3 = \frac{\mu l\,O_3}{V_R} \quad (9)$$

4.5.5 Repeat steps 4.5.3 and 4.5.4 at least one more time at the same O_3 generator setting. Average the two (or more) determinations and record the average along with the O_3 generator setting.

4.5.6 Adjust the O_3 generator to obtain other O_3 concentrations over the desired range. Determine each O_3 concentration using the procedure given above. Five or more O_3 concentrations are recommended. Plot the O_3 concentrations versus the corresponding O_3 generator settings and draw the O_3 generator calibration curve.

4.6 *Calibration of the ozone analyzer.*

4.6.1 Allow sufficient time for the O_3 analyzer to warm-up and stabilize.

4.6.2 Allow the O_3 analyzer to sample zero air until a stable response is obtained and adjust the O_3 analyzer's zero control. Offsetting the analyzer's zero adjustment to +5% of scale is recommended to facilitate observing negative zero drift. Record the stable zero air response as ''Z''.

4.6.3 Using the O_3 generator as calibrated above and the same F_0, generate an O_3 concentration near 80% of the desired upper range limit (URL) of the O_3 analyzer.

4.6.4 Allow the O_3 analyzer to sample this O_3 concentration until a stable response is obtained. Adjust the analyzer's span control to obtain a convenient recorder response as indicated below:

$$\text{recorder response}(\%\,\text{scale}) = \left(\frac{[O_3]_{OUT}}{URL} \times 100\right) + Z \quad (10)$$

$[O_3]_{OUT}$=O_3 concentration at the output manifold, ppm URL = upper range limit of the O_3 analyzer, ppm, Z = recorder response with zero air, % scale.

Record the O_3 concentration and the O_3 analyzer response. If substantial adjustment of the span control is necessary, recheck the zero and span adjustments by repeating steps 4.6.2 through 4.6.4.

4.6.5 Generate several other O_3 concentrations (at least 5 others are recommended) over the scale range of the O_3 analyzer by adjusting the O_3 generator settings (preferably the same settings as used in section 4.5) or by Option 1. For each O_3 concentration, allow for a stable analyzer response, then record the response and the corresponding O_3 concentration.

4.6.6 Plot the O_3 analyzer responses versus the corresponding O_3 concentrations and draw the O_3 analyzer's calibration curve or calculate the appropriate response factor.

4.6.7 *Option 1:* The various O_3 concentrations required in step 4.6.5 may be obtained by dilution of the O_3 concentration generated in section 4.6.3. With this option, accurate flow measurements are required. The dynamic calibration system must be modified as shown in Figure 3 to allow for dilution air to be metered in downstream of the O_3 generator. A mixing chamber between the O_3 generator and the output manifold is also required. The flowrate through the O_3 generator (F_0) and the dilution air flowrate (F_D) are measured with a reliable flow or volume standard traceable to NBS. The highest O_3 concentration standard required (80% URL) is assayed according to the procedure in section 4.5. Each O_3 concentration generated by dilution is calculated from:

$$[O_3]'_{OUT} = [O_3]_{OUT}\left(\frac{F_O}{F_O + F_D}\right) \quad (11)$$

where: $[O_3']'_{OUT}$ = diluted O_3 concentration, ppm; F_0 = flowrate through the O_3 generator, liter/min; F_D = diluent air flowrate, liter/min.

NOTE: Direct calibration of the O_3 analyzer may also be accomplished by assaying the O_3 concentrations using the procedure in section 4.5 while simultaneously measuring the

corresponding O_3 analyzer responses as specified in section 4.6.

REFERENCES

1. D. L. Flamm, ''Analysis of Ozone at Low Concentrations with Boric Acid Buffered KI,'' *Environ. Sci. Technol., 11,* 978 (1977).

2. B. E. Saltzman and N. Gilbert, ''Iodometric Microdetermination of Organic Oxidants and Ozone,'' *Anal. Chem., 31,* 1914 (1959).

3. J. P. Lodge, Jr., J. B. Pate, B. E. Ammons, and G. A. Swanson, ''The Use of Hypodermic Needles as Critical Orifices in Air Sampling,'' *J. Air Poll. Control Assoc., 16,* 197 (1966).

4. ''Transfer Standards for Calibration of Ambient Air Monitoring Analyzers for Ozone,'' EPA Publication available from EPA, Department E(MD–77), Research Triangle Park, NC 27711.

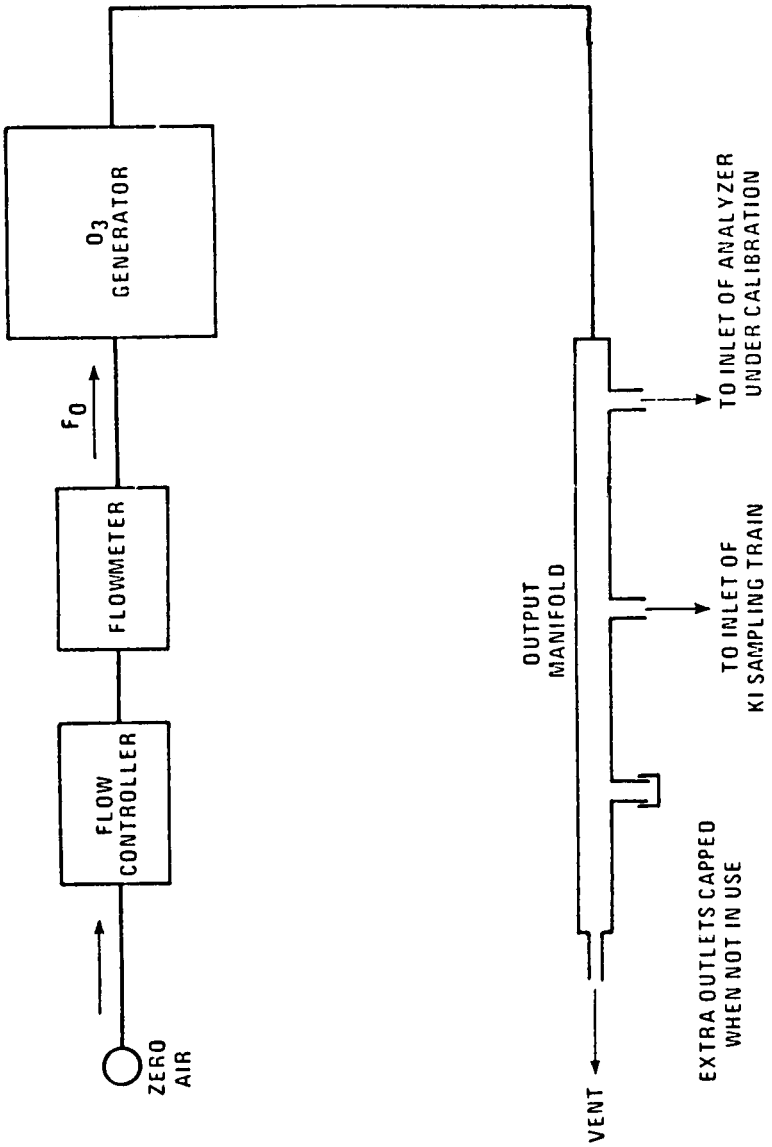

Figure 1. Schematic diagram of a typical BAKI calibration system.

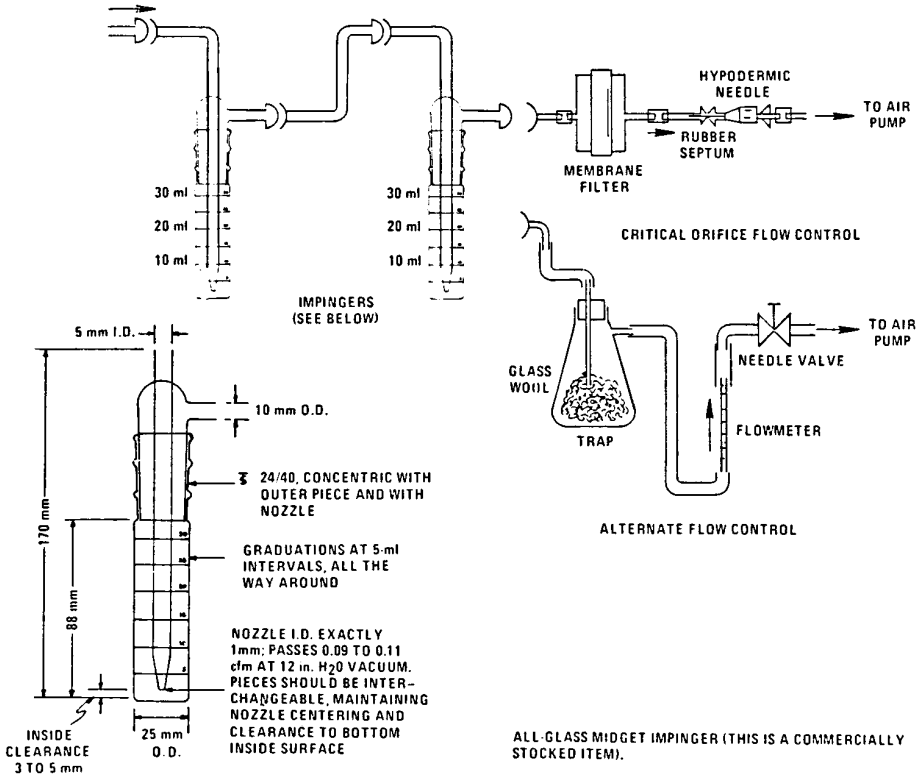

Figure 2. KI sampling train.

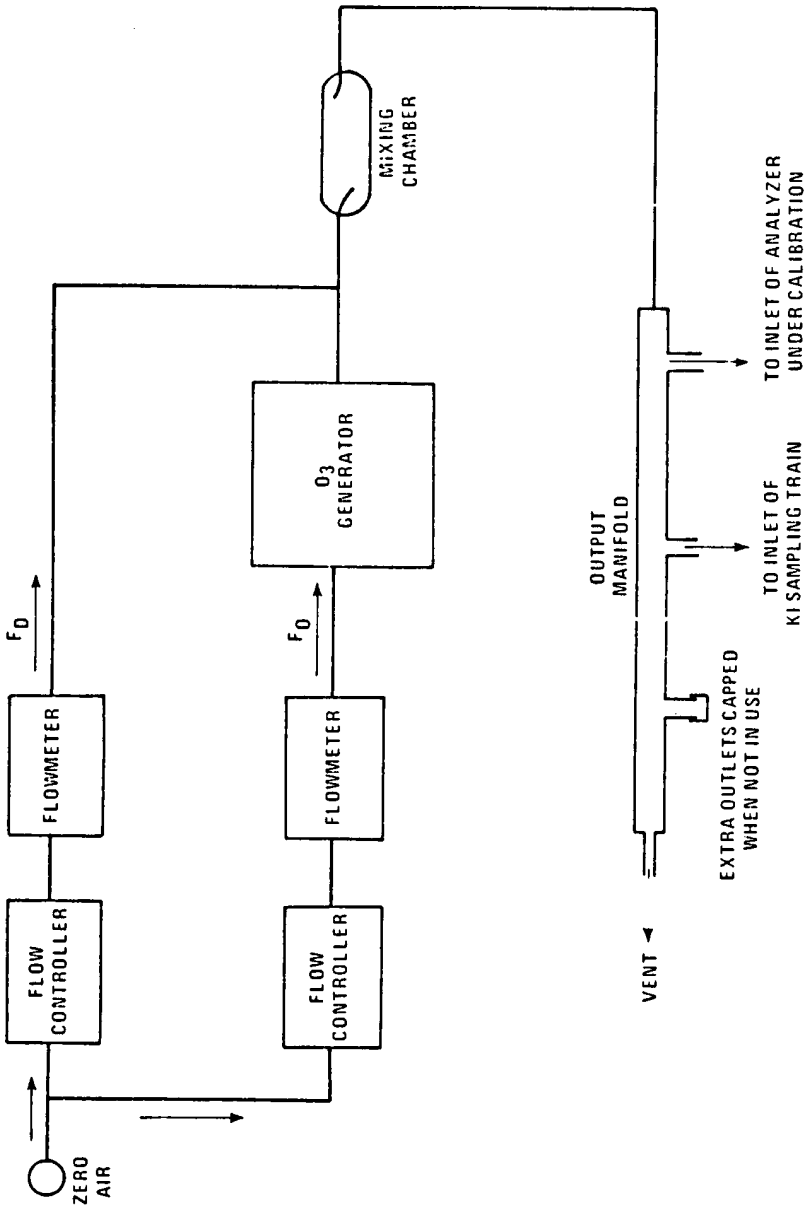

Figure 3. Schematic diagram of a typical BAKI calibration system (Option 1).

[44 FR 8224, Feb. 8, 1979]

APPENDIX E TO PART 50—REFERENCE METHOD FOR DETERMINATION OF HYDROCARBONS CORRECTED FOR METHANE

1. *Principle and Applicability.*

1.1 Measured volumes of air are delivered semicontinuously (4 to 12 times per hour) to a hydrogen flame ionization detector to measure its total hydrocarbon (THC) content. An aliquot of the same air sample is introduced into a stripper column which removes water, carbon dioxide, and hydrocarbons other than methane. Methane and carbon monoxide are passed quantitatively to a gas chromatographic column where they are separated. The methane is eluted first, and is passed unchanged through a catalytic reduction tube into the flame ionization detector. The carbon monoxide is eluted into the catalytic reduction tube where it is reduced to methane before passing through the flame ionization detector. Between analyses the stripper column is backflushed to prepare it for subsequent analysis. Hydrocarbon concentrations corrected for methane are determined by subtracting the methane value from the total hydrocarbon value.

Two modes of operation are possible: (1) A complete chromatographic analysis showing the continuous output from the detector for each sample injection;

(2) The system is programed for automatic zero and span to display selected band widths of the chromatogram. The peak height is then used as the measure of the concentration. The former operation is referred to as the chromatographic or spectro mode and the latter as the barographic or ''normal'' mode depending on the make of analyzer.

1.2 The method is applicable to the semicontinuous measurement of hydrocarbons corrected for methane in ambient air. The carbon monoxide measurement, which is simultaneously obtained in this method, is not required in making measurements of hydrocarbons corrected for methane and will not be dealt with here.

2. *Range and Sensitivity.*

2.1 Instruments are available with various range combinations. For atmospheric analysis the THC range is 0–13.1 mg./m.^{3} (0–20 p.p.m.) carbon (as CH_4) and the methane range is 0–6.55 mg./m.^{3} (0–10 p.p.m.). For special applications, lower ranges are available and in these applications the range for THC is 0–1.31 mg./m.^{3} (0–2 p.p.m.) carbon (as CH_4) and for methane the range is 0–1.31 mg./m.^{3} (0–2 p.p.m.).

2.2 For the higher, atmospheric analysis ranges the sensitivity for THC is 0.065 mg./m.^{3} (0.1 p.p.m.) carbon (as CH_4) and for methane the sensitivity is 0.033 mg./m.^{3} (0.05 p.p.m.). For the lower, special analysis ranges the sensitivity is 0.016 mg./m.^{3} (0.025 p.p.m.) for each gas.

3. *Interferences.*

3.1 No interference in the methane measurement has been observed. The THC measurement typically includes all or a portion of what is generally classified as the air peak interference. This effect is minimized by proper plumbing arrangements or is negated electronically.

4. *Precision, Accuracy, and Stability.*

4.1 Precision determined with calibration gases is ±0.5 percent of full scale in the higher, atmospheric analysis ranges.

4.2 Accuracy is dependent on instrument linearity and absolute concentration of the calibration gases. An accuracy of 1 percent of full scale in the higher, atmospheric analysis ranges and 2 percent of full scale in the lower, special analysis ranges can be obtained.

4.3 Variations in ambient room temperature can cause changes in performance characteristics. This is due to shifts in oven temperature, flow rates, and pressure with ambient temperature change. The instrument should meet performance specifications with room temperature changes of ±3° C. Baseline drift is automatically corrected in the barographic mode.

5. *Apparatus.* 5.1 *Commercially Available THC, CH_4, and CO Analyzer.* Instruments should be installed on location and demonstrated, preferably by the manufacturer, or his representative, to meet or exceed manufacturer's specifications and those described in this method.

5.2 *Sample Introduction System.* Pump, flow control valves, automatic switching valves, and flowmeter.

5.3 *Filter* (*In-line*). A binder-free, glass-fiber filter with a porosity of 3 to 5 microns should be immediately downstream from the sample pump.

5.4 *Stripper or Precolumn.* Located outside of the oven at ambient temperature. The column should be repacked or replaced after the equivalent of 2 months of continuous operation.

5.5 *Oven.* For containing the analytical column and catalytic converter. The oven should be capable of maintaining an elevated temperature constant within ±0.5° C. The specific temperature varies with instrument manufacturer.

6. *Reagents.*

6.1 *Combustion Gas.* Air containing less than 1.3 mg./m.^{3} (2 p.p.m.) hydrocarbon as methane.

6.2 *Fuel.* Hydrogen or a mixture of hydrogen and inert gas containing less than 0.065 mg./m.^{3} (0.1 p.p.m.) hydrocarbons as methane.

6.3 *Carrier Gas.* Helium, nitrogen, air or hydrogen containing less than 0.005 mg./m.^{3} (0.1 p.p.m.) hydrocarbons as methane.

6.4 *Zero Gas.* Air containing less than 0.065 mg./m.^{3} (0.1 p.p.m.) total hydrocarbons as methane.

6.5 *Calibration Gases.* Gases needed for linearity checks (peak heights) are determined by the ranges used. Calibration gases corresponding to 10, 20, 40, and 80 percent of full scale are needed. Gases must be provided with certification or guaranteed analysis. Methane is used for both the total hydrocarbon measurement and methane measurement.

6.6 *Span Gas.* The calibration gas corresponding to 80 percent of full scale is used to span the instrument.

7. *Procedure.*

7.1 Calibrate the instrument as described in 8.1. Introduce sample into the system under the same conditions of pressure and flow rates as are used in calibration. (The pump is bypassed only when pressurized cylinder gases are used.) Figure E1 shows a typical flow diagram; for specific operating instructions refer to manufacturer's manual.

8. *Calibration.*

8.1 *Calibration Curve.* Determine the linearity of the system for THC and methane in the barographic mode by introducing zero gas and adjusting the respective zeroing controls to indicate a recorder reading of zero. Introduce the span gas and adjust the span control to indicate the proper value on the recorder scale. Recheck zero and span until adjustments are no longer necessary. Introduce intermediate calibration gases and plot the values obtained. If a smooth curve is not obtained, calibration gases may need replacement.

9. *Calculation.*

9.1 Determine concentrations of total hydrocarbons (as CH_4) and CH_4, directly from the calibration curves. No calculations are necessary.

9.2 Determine concentration of hydrocarbons corrected for methane by subtracting the methane concentration from the total hydrocarbon concentration.

9.3 Conversion between p.p.m. and mg./m.^{3} values for total hydrocarbons (as CH_4) methane and hydrocarbons corrected for methane are made as follows:

$$\text{p.p.m. carbon (as } CH_4) = [\text{mg. carbon (as } CH_4)/\text{m.}^3] \times 1.53$$

10. *Bibliography.*

Fee, G., ''Multi-Parameter Air Quality Analyzer'', ISA Proceedings AID/CHEMPID Symposium, Houston, TX, April 19–21, 1971.

Villalobos, R., and Chapman, R. L., ''A Gas Chromatographic Method for Automatic Monitoring of Pollutants in Ambient Air'', ibid.

Stevens, R. K., ''The Automated Gas Chromatograph as an Air Pollutant Monitor'', 1970 Conference on Environmental Toxicology, U.S. Air Force, Wright-Patterson Air Force Base, Dayton, OH.

Stevens, R. K., and O'Keeffe, A. E., *Anal. Chem. 42,* 143A (1970).

Schuck, E. A., Altshuller, A. P., Barth, D. S. and Morgan, G. B., ''Relationship of Hydrocarbons to Oxidants in Ambient Atmospheres'', *J. Air Poll. Cont. Assoc. 20,* 297–302 (1970).

Stevens, R. K., O'Keeffe, A. E., and Ortman, G. C., ''A Gas Chromatographic Approach to the Semi-Continuous Monitoring of Atmospheric Carbon Monoxide and Methane'', Proceedings of 11th Conference on Methods in Air Pollution on Industrial Hygiene Studies, Berkeley, CA, March 30–April 1, 1970.

Swinnerton, J. W., Linnenbom, V. J. and Check, C. H., *Environ. Sci. Technol. 3,* 836 (1969).

Williams, I. G., *Advances in Chromatography,* Giddings, J. C., and Keller, R. A., editors, Marcell Dekker, N.Y. (1968), pp. 173–182.

Altshuller, A. P., Kopcznski, S. L., Lonneman, W. A., Becker, T. L. and Slater, R., *Environ. Sci. Technol. 1,* 899 (1967).

Altshuller, A. P., Cohen, I. R., and Purcell, T. C., *Can. J. Chem., 44,* 2973 (1966).

DuBois, L., Zdrojewski, A., and Monkman, J. L., *J. Air Poll. Cont. Assoc. 16,* 135 (1966).

Ortman, G. C., *Anal. Chem. 38,* 644–646 (1966).

Porter, K., and Volman, D. H., *Anal. Chem. 34,* 748–749 (1962).

Crum, W. M., Proceedings, National Analysis Instrumentation Symposium ISA, 1962.

Schwink, A., Hochenberg, H., and Forderreuther, M., *Brennstoff-Chemie 72,* No. 9, 295 (1961).

Instruction Manual for Air Quality Chromatograph Model 6800, Beckman Instrument Co., Fullerton, CA.

Instruction Manual, Bendix Corp., Ronceverte, WV.

Instruction Manual, Byron Instrument Co., Raleigh, NC.

MSA Instruction Manual for GC Process Analyzer for Total Hydrocarbon, Methane and Carbon Monoxide, Pittsburgh, PA.

Monsanto Enviro-Chem System for Total Hydrocarbons, Methane and Carbon Monoxide Instruction Manual, Dayton, OH.

Union Carbide Instruction Manual for Model 3020 Gas Chromatograph for CO–CH_4–T/1, White Plains, NY.

Instruction Manual for 350 F Analyzer, Tracor Inc., Austin, TX.

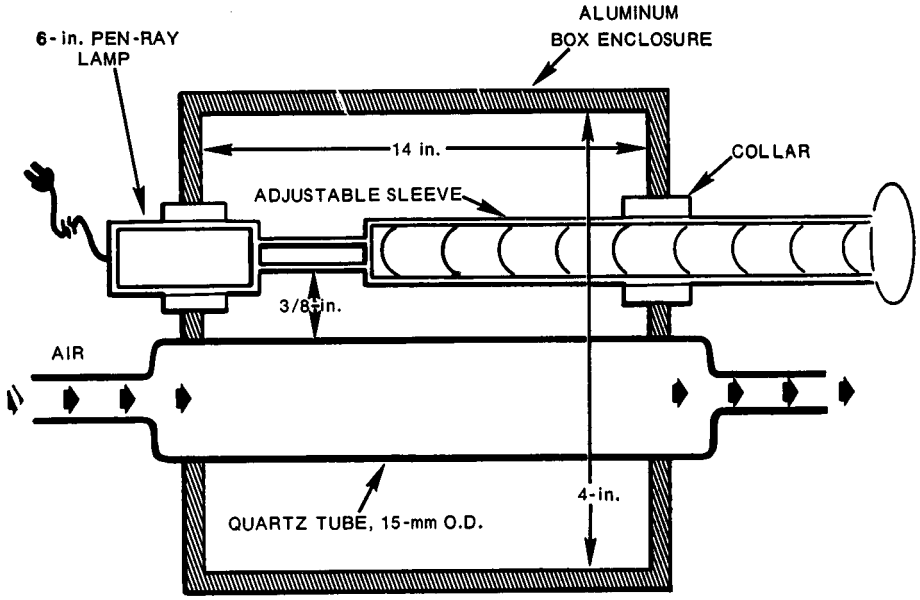

Figure D2. Ozone source.

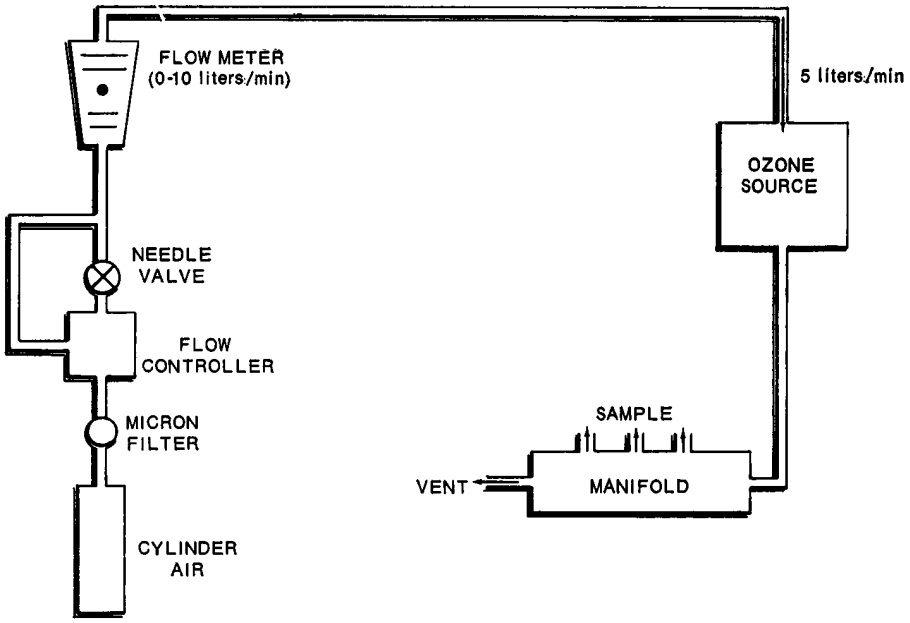

Figure D3. Ozone calibration air supply, source, and manifold system.

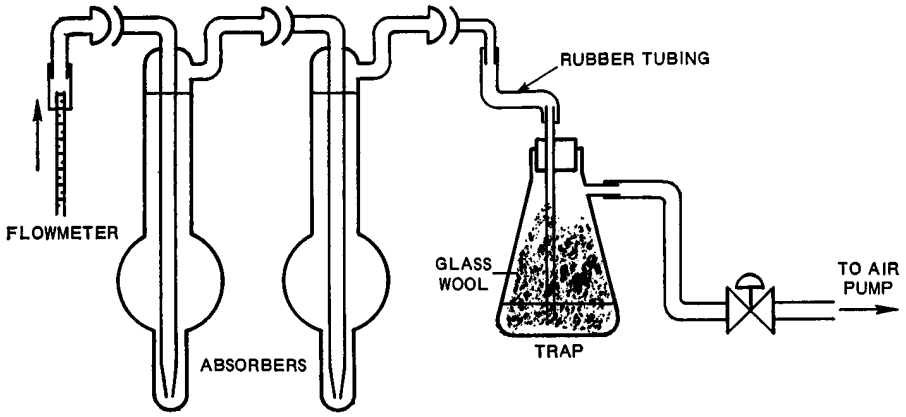

Figure D4. KI sampling train.

ADDENDA

A. *Suggested Performance Specifications for Atmospheric Analyzers for Hydrocarbons Corrected for Methane:*

Range (minimum)	0.3 mg./m.^{3} (0–5 p.p.m.) THC. 0–3 mg./m.^{3} (0–5 p.p.m.) CH_4.
Output (minimum)	0–10 mv. full scale.
Minimum detectable sensitivity.	0.1 p.p.m. THC. 0.1 p.p.m. CH_4.
Zero drift (maximum)	Not to exceed 1 percent/24 hours.
Span drift (maximum)	Not to exceed 1 percent/24 hours.
Precision (minimum)	±0.5 percent.
Operational period (minimum)	3 days.
Operating temperature range (minimum).	5–40° C.
Operating humidity range (minimum).	10–100 percent.
Linearity (maximum)	1 percent of full scale.

B. *Suggested Definitions of Performance Specifications:*

Range—The minimum and maximum measurement limits.

Output—Electrical signal which is proportional to the measurement; intended for connection to readout or data processing devices. Usually expressed as millivolts or milliamps full scale at a given impedence.

Full Scale—The maximum measuring limit for a given range.

Minimum Detectable Sensitivity—The smallest amount of input concentration that can be detected as the concentration approaches zero.

Accuracy—The degree of agreement between a measured value and the true value; usually expressed at ± percent of full scale.

Lag Time—The time interval from a step change in input concentration at the instrument inlet to the first corresponding change in the instrument output.

Time to 90 Percent Response—The time interval from a step change in the input concentration at the instrument inlet to a reading of 90 percent of the ultimate recorded concentration.

Rise Time (90 percent)—The interval between initial response time and time to 90 percent response after a step decrease in the inlet concentration.

Zero Drift—The change in instrument output over a stated time period, usually 24 hours, of unadjusted continuous operation, when the input concentration is zero; usually expressed as percent full scale.

Span Drift—The change in instrument output over a stated time period, usually 24 hours, of unadjusted continuous operation, when the input concentration is a stated upscale value; usually expressed as percent full scale.

Precision—The degree of agreement between repeated measurements of the same concentration. It is expressed as the average deviation of the single results from the mean.

Operational Period—The period of time over which the instrument can be expected to operate unattended within specifications.

Noise—Spontaneous deviations from a mean output not caused by input concentration changes.

Interference—An undesired positive or negative output caused by a substance other than the one being measured.

Interference Equivalent—The portion of indicated input concentration due to the presence of an interferent.

Operating Temperature Range—The range of ambient temperatures over which the instrument will meet all performance specifications.

Operating Humidity Range—The range of ambient relative humidity over which the instrument will meet all performance specifications.

Linearity—The maximum deviation between an actual instrument reading and the reading predicted by a straight line drawn between upper and lower calibration points.

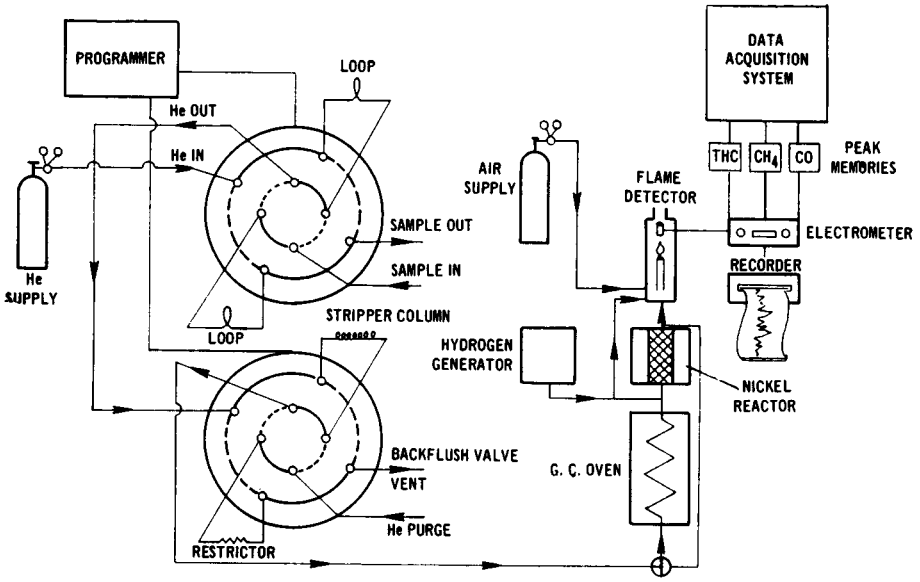

Figure E1. Typical flow diagram.

[36 FR 22394, Nov. 25, 1971]

APPENDIX F TO PART 50—MEASUREMENT PRINCIPLE AND CALIBRATION PROCEDURE FOR THE MEASUREMENT OF NITROGEN DIOXIDE IN THE ATMOSPHERE (GAS PHASE CHEMILUMINESCENCE)

Principle and Applicability

1. Atmospheric concentrations of nitrogen dioxide (NO_2) are measured indirectly by photometrically measuring the light intensity, at wavelengths greater than 600 nanometers, resulting from the chemiluminescent reaction of nitric oxide (NO) with ozone (O_3). (*1,2,3*) NO_2 is first quantitatively reduced to NO(*4,5,6*) by means of a converter. NO, which commonly exists in ambient air together with NO_2, passes through the converter unchanged causing a resultant total NO_x concentration equal to $NO+NO_2$. A sample of the input air is also measured without having passed through the converted. This latter NO measurement is subtracted from the former measurement ($NO+NO_2$) to yield the final NO_2 measurement. The NO and $NO+NO_2$ measurements may be made concurrently with dual systems, or cyclically with the same system provided the cycle time does not exceed 1 minute.

2. *Sampling considerations.*

2.1 Chemiluminescence $NO/NO_x/NO_2$ analyzers will respond to other nitrogen containing compounds, such as peroxyacetyl nitrate (PAN), which might be reduced to NO in the thermal converter. (*7*) Atmospheric concentrations of these potential interferences are generally low relative to NO_2 and valid NO_2 measurements may be obtained. In certain geographical areas, where the concentration of these potential interferences is known or suspected to be high relative to NO_2, the use of an equivalent method for the measurement of NO_2 is recommended.

2.2 The use of integrating flasks on the sample inlet line of chemiluminescence $NO/NO_x/NO_2$ analyzers is optional and left to couraged. The sample residence time between the sampling point and the analyzer

should be kept to a minimum to avoid erroneous NO_2 measurements resulting from the reaction of ambient levels of NO and O_3 in the sampling system.

2.3 The use of particulate filters on the sample inlet line of chemiluminescence NO/NO_x/NO_2 analyzers is optional and left to the discretion of the user or the manufacturer. Use of the filter should depend on the analyzer's susceptibility to interference, malfunction, or damage due to particulates. Users are cautioned that particulate matter concentrated on a filter may cause erroneous NO_2 measurements and therefore filters should be changed frequently.

3. An analyzer based on this principle will be considered a reference method only if it has been designated as a reference method in accordance with Part 53 of this chapter.

Calibration

1. *Alternative A*—Gas phase titration (GPT) of an NO standard with O_3.

Major equipment required: Stable O_3 generator. Chemiluminescence NO/NO_x/NO_2 analyzer with strip chart recorder(s). NO concentration standard.

1.1 Principle. This calibration technique is based upon the rapid gas phase reaction between NO and O_3 to produce stoichiometric quantities of NO_2 in accordance with the following equation: (*8*)

$$NO+O_3 \rightarrow NO_2+O_2 \qquad (1)$$

The quantitative nature of this reaction is such that when the NO concentration is known, the concentration of NO_2 can be determined. Ozone is added to excess NO in a dynamic calibration system, and the NO channel of the chemiluminescence NO/NO_x/NO_2 analyzer is used as an indicator of changes in NO concentration. Upon the addition of O_3, the decrease in NO concentration observed on the calibrated NO channel is equivalent to the concentration of NO_2 produced. The amount of NO_2 generated may be varied by adding variable amounts of O_3 from a stable uncalibrated O_3 generator. (*9*)

1.2 Apparatus. Figure 1, a schematic of a typical GPT apparatus, shows the suggested configuration of the components listed below. All connections between components in the calibration system downstream from the O_3 generator should be of glass, Teflon®, or other non-reactive material.

1.2.1 Air flow controllers. Devices capable of maintaining constant air flows within ±2% of the required flowrate.

1.2.2 NO flow controller. A device capable of maintaining constant NO flows within ±2% of the required flowrate. Component parts in contact with the NO should be of a non-reactive material.

1.2.3 Air flowmeters. Calibrated flowmeters capable of measuring and monitoring air flowrates with an accuracy of ±2% of the measured flowrate.

1.2.4 NO flowmeter. A calibrated flowmeter capable of measuring and monitoring NO flowrates with an accuracy of ±2% of the measured flowrate. (Rotameters have been reported to operate unreliably when measuring low NO flows and are not recommended.)

1.2.5 Pressure regulator for standard NO cylinder. This regulator must have a nonreactive diaphragm and internal parts and a suitable delivery pressure.

1.2.6 Ozone generator. The generator must be capable of generating sufficient and stable levels of O_3 for reaction with NO to generate NO_2 concentrations in the range required. Ozone generators of the electric discharge type may produce NO and NO_2 and are not recommended.

1.2.7 Valve. A valve may be used as shown in Figure 1 to divert the NO flow when zero air is required at the manifold. The valve should be constructed of glass, Teflon®, or other nonreactive material.

1.2.8 Reaction chamber. A chamber, constructed of glass, Teflon®, or other nonreactive material, for the quantitative reaction of O_3 with excess NO. The chamber should be of sufficient volume (V_{RC}) such that the residence time (t_R) meets the requirements specified in 1.4. For practical reasons, t_R should be less than 2 minutes.

1.2.9 Mixing chamber. A chamber constructed of glass, Teflon®, or other nonreactive material and designed to provide thorough mixing of reaction products and diluent air. The residence time is not critical when the dynamic parameter specification given in 1.4 is met.

1.2.10 Output manifold. The output manifold should be constructed of glass, Teflon®, or other non-reactive material and should be of sufficient diameter to insure an insignificant pressure drop at the analyzer connection. The system must have a vent designed to insure atmospheric pressure at the manifold and to prevent ambient air from entering the manifold.

1.3 Reagents.

1.3.1 NO concentration standard. Gas cylinder standard containing 50 to 100 ppm NO in N_2 with less than 1 ppm NO_2. This standard must be traceable to a National Bureau of Standards (NBS) NO in N_2 Standard Reference Material (SRM 1683 or SRM 1684), an NBS NO_2 Standard Reference Material (SRM 1629), or an NBS/EPA-approved commercially available Certified Reference Material (CRM). CRM's are described in Reference 14, and a list of CRM sources is available from the address shown for Reference 14. A recommended protocol for certifying NO gas cylinders against either an NO SRM or CRM is given in section 2.0.7 of Reference 15. Reference 13 gives procedures for certifying an NO gas cylinder against an NBS NO_2 SRM and for determining the amount of NO_2 impurity in an NO cylinder.

1.3.2 Zero air. Air, free of contaminants which will cause a detectable response on the $NO/NO_x/NO_2$ analyzer or which might react with either NO, O_3, or NO_2 in the gas phase titration. A procedure for generating zero air is given in reference 13.

1.4 Dynamic parameter specification.

1.4.1 The O_3 generator air flowrate (F_0) and NO flowrate (F_{NO}) (see Figure 1) must be adjusted such that the following relationship holds:

$$P_R=[NO]_{RC}\times t_R \text{ 2.75 ppm-minutes} \quad (2)$$

$$[NO]_{RC} = [NO]_{STD}\left(\frac{F_{NO}}{F_O+F_{NO}}\right) \quad (3)$$

$$t_R = \frac{V_{RC}}{F_O + F_{NO}} < 2 \text{ minutes} \quad (4)$$

where:

P_R=dynamic parameter specification, determined empirically, to insure complete reaction of the available O_3, ppm-minute

$[NO]_{RC}$=NO concentration in the reaction chamber, ppm

$_R$=residence time of the reactant gases in the reaction chamber, minute

$[NO]_{STD}$=concentration of the undiluted NO standard, ppm

F_{NO}=NO flowrate, scm^3/min

F_O=O_3 generator air flowrate, scm^3/min

V_{RC}=volume of the reaction chamber, scm^3

1.4.2 The flow conditions to be used in the GPT system are determined by the following procedure:

(a) Determine F_T, the total flow required at the output manifold (F_T=analyzer demand plus 10 to 50% excess).

(b) Establish $[NO]_{OUT}$ as the highest NO concentration (ppm) which will be required at the output manifold. $[NO]_{OUT}$ should be approximately equivalent to 90% of the upper range limit (*URL*) of the NO_2 concentration range to be covered.

(c) Determine F_{NO} as

$$F_{NO} = \frac{[NO]_{OUT}\times F_T}{[NO]_{STD}} \quad (5)$$

(d) Select a convenient or available reaction chamber volume. Initially, a trial V_{RC} may be selected to be in the range of approximately 200 to 500 scm^3.

(e) Compute FO as

$$F_O=\sqrt{\frac{[NO]_{STD}\times F_{NO}\times V_{RC}}{2.75}}-F_{NO} \quad (6)$$

(f) Compute t_R as

$$t_R = \frac{V_{RC}}{F_O + F_{NO}} \quad (7)$$

Verify that $t_R < 2$ minutes. If not, select a reaction chamber with a smaller V_{RC}.

(g) Compute the diluent air flowrate as

$$F_D=F_T'F_O'F_{NO} \quad (8)$$

where:

F_D=diluent air flowrate, scm^3/min

(h) If F_O turns out to be impractical for the desired system, select a reaction chamber having a different V_{RC} and recompute F_O and F_D.

NOTE: A dynamic parameter lower than 2.75 ppm-minutes may be used if it can be determined empirically that quantitative reaction of O_3 with NO occurs. A procedure for making this determination as well as a more detailed discussion of the above requirements and other related considerations is given in reference 13.

1.5 *Procedure.*

1.5.1 Assemble a dynamic calibration system such as the one shown in Figure 1.

1.5.2 Insure that all flowmeters are calibrated under the conditions of use against a reliable standard such as a soap-bubble meter or wet-test meter. All volumetric flowrates should be corrected to 25° C and 760 mm Hg. A discussion on the calibration of flowmeters is given in reference 13.

1.5.3 Precautions must be taken to remove O_2 and other contaminants from the NO pressure regulator and delivery system prior to the start of calibration to avoid any conversion of the standard NO to NO_2. Failure to do so can cause significant errors in calibration. This problem may be minimized by (1) carefully evacuating the regulator, when possible, after the regulator has been connected to the cylinder and before opening the cylinder valve; (2) thoroughly flushing the regulator and delivery system with NO after opening the cylinder valve; (3) not removing the regulator from the cylinder between calibrations unless absolutely necessary. Further discussion of these procedures is given in reference 13.

1.5.4 Select the operating range of the $NO/NO_x/NO_2$ analyzer to be calibrated. In order to obtain maximum precision and accuracy for NO_2 calibration, all three channels of the

analyzer should be set to the same range. If operation of the NO and NO_x channels on higher ranges is desired, subsequent recalibration of the NO and NO_x channels on the higher ranges is recommended.

NOTE: Some analyzer designs may require identical ranges for NO, NO_x, and NO_2 during operation of the analyzer.

1.5.5 Connect the recorder output cable(s) of the NO/NO_x/NO_2 analyzer to the input terminals of the strip chart recorder(s). All adjustments to the analyzer should be performed based on the appropriate strip chart readings. References to analyzer responses in the procedures given below refer to recorder responses.

1.5.6 Determine the GPT flow conditions required to meet the dynamic parameter specification as indicated in 1.4.

1.5.7 Adjust the diluent air and O_3 generator air flows to obtain the flows determined in section 1.4.2. The total air flow must exceed the total demand of the analyzer(s) connected to the output manifold to insure that no ambient air is pulled into the manifold vent. Allow the analyzer to sample zero air until stable NO, NO_x, and NO_2 responses are obtained. After the responses have stabilized, adjust the analyzer zero control(s).

NOTE: Some analyzers may have separate zero controls for NO, NO_x, and NO_2. Other analyzers may have separate zero controls only for NO and NO_x, while still others may have only one zero control common to all three channels.

Offsetting the analyzer zero adjustments to +5 percent of scale is recommended to facilitate observing negative zero drift. Record the stable zero air responses as Z_{NO}, Z_{NOX}, and Z_{NO_2}.

1.5.8 Preparation of NO and NO_x calibration curves.

1.5.8.1 Adjustment of NO span control. Adjust the NO flow from the standard NO cylinder to generate an NO concentration of approximately 80 percent of the upper range limit (*URL*) of the NO range. This exact NO concentration is calculated from:

$$[NO]_{OUT} = \frac{F_{NO} \times [NO]_{STD}}{F_{NO} + F_O + F_D} \qquad (9)$$

where:

$[NO]_{OUT}$=diluted NO concentration at the output manifold, ppm

Sample this NO concentration until the NO and NO_x responses have stabilized. Adjust the NO span control to obtain a recorder response as indicated below:

recorder response (percent scale) =

$$\left(\frac{[NO]_{OUT}}{URL} \times 100\right) + Z_{NO} \qquad (10)$$

where:

URL=nominal upper range limit of the NO channel, ppm

NOTE: Some analyzers may have separate span controls for NO, NO_x, and NO_2. Other analyzers may have separate span controls only for NO and NO_x, while still others may have only one span control common to all three channels. When only one span control is available, the span adjustment is made on the NO channel of the analyzer.

If substantial adjustment of the NO span control is necessary, it may be necessary to recheck the zero and span adjustments by repeating steps 1.5.7 and 1.5.8.1. Record the NO concentration and the analyzer's NO response.

1.5.8.2 Adjustment of NO_x span control. When adjusting the analyzer's NO_x span control, the presence of any NO_2 impurity in the standard NO cylinder must be taken into account. Procedures for determining the amount of NO_2 impurity in the standard NO cylinder are given in reference 13. The exact NO_x concentration is calculated from:

$$[NO_X]_{OUT} = \frac{F_{NO} \times \left([NO]_{STD} + [NO_2]_{IMP}\right)}{F_{NO} + F_O + F_D} \qquad (11)$$

where:

$[NO_x]_{OUT}$=diluted NO_x concentration at the output manifold, ppm

$[NO_2]_{IMP}$=concentration of NO_2 impurity in the standard NO cylinder, ppm

Adjust the NO_X span control to obtain a recorder response as indicated below:

recorder response (% scale)=

$$\left(\frac{[NO_X]_{OUT}}{URL} \times 100\right) + Z_{NO_X} \qquad (12)$$

NOTE: If the analyzer has only one span control, the span adjustment is made on the NO channel and no further adjustment is made here for NO_x.

If substantial adjustment of the NO_x span control is necessary, it may be necessary to recheck the zero and span adjustments by repeating steps 1.5.7 and 1.5.8.2. Record the NO_x concentration and the analyzer's NO_x response.

1.5.8.3 Generate several additional concentrations (at least five evenly spaced points across the remaining scale are suggested to verify linearity) by decreasing F_{NO} or increasing F_D. For each concentration generated, calculate the exact NO and NO_x

concentrations using equations (9) and (11) respectively. Record the analyzer's NO and NO_x responses for each concentration. Plot the analyzer responses versus the respective calculated NO and NO_x concentrations and draw or calculate the NO and NO_x calibration curves. For subsequent calibrations where linearity can be assumed, these curves may be checked with a two-point calibration consisting of a zero air point and NO and NO_x concentrations of approximately 80% of the *URL*.

1.5.9 *Preparation of NO_2 calibration curve.*

1.5.9.1 Assuming the NO_2 zero has been properly adjusted while sampling zero air in step 1.5.7, adjust F_O and F_D as determined in section 1.4.2. Adjust F_{NO} to generate an NO concentration near 90% of the *URL* of the NO range. Sample this NO concentration until the NO and NO_x responses have stabilized. Using the NO calibration curve obtained in section 1.5.8, measure and record the NO concentration as $[NO]_{orig}$. Using the NO_x calibration curve obtained in section 1.5.8, measure and record the NO_x concentration as $[NO_x]_{orig}$.

1.5.9.2 Adjust the O_3 generator to generate sufficient O_3 to produce a decrease in the NO concentration equivalent to approximately 80% of the URL of the NO_2 range. The decrease must not exceed 90% of the NO concentration determined in step 1.5.9.1. After the analyzer responses have stabilized, record the resultant NO and NO_x concentrations as $[NO]_{rem}$ and $[NO_x]_{rem}$.

1.5.9.3 Calculate the resulting NO_2 concentration from:

$$[NO_2]_{OUT}=[NO]_{orig}-[NO]_{rem}+\frac{F_{NO}\times[NO_2]_{IMP}}{F_{NO}+F_O+F_D} \quad (13)$$

where:

$[NO_2]_{OUT}$=diluted NO_2 concentration at the output manifold, ppm

$[NO]_{orig}$=original NO concentration, prior to addition of O_3, ppm

$[NO]_{rem}$=NO concentration remaining after addition of O_3, ppm

Adjust the NO_2 span control to obtain a recorder response as indicated below:

recorder response (% scale) =

$$\left(\frac{[NO_2]_{OUT}}{URL}\times 100\right)+Z_{NO_2} \quad (14)$$

NOTE: If the analyzer has only one or two span controls, the span adjustments are made on the NO channel or NO and NO_x channels and no further adjustment is made here for NO_2.

If substantial adjustment of the NO_2 span control is necessary, it may be necessary to recheck the zero and span adjustments by repeating steps 1.5.7 and 1.5.9.3. Record the NO_2 concentration and the corresponding analyzer NO_2 and NO_x responses.

1.5.9.4 Maintaining the same F_{NO}, F_O, and F_D as in section 1.5.9.1, adjust the ozone generator to obtain several other concentrations of NO_2 over the NO_2 range (at least five evenly spaced points across the remaining scale are suggested). Calculate each NO_2 concentration using equation (13) and record the corresponding analyzer NO_2 and NO_x responses. Plot the analyzer's NO_2 responses versus the corresponding calculated NO_2 concentrations and draw or calculate the NO_2 calibration curve.

1.5.10 *Determination of converter efficiency.*

1.5.10.1 For each NO_2 concentration generated during the preparation of the NO_2 calibration curve (see section 1.5.9) calculate the concentration of NO_2 converted from:

$$[NO_2]_{CONV}=[NO_2]_{OUT}'([NO_x]_{orig}'[NO_x]_{rem}) \quad (15)$$

where:

$[NO_2]_{CONV}$=concentration of NO_2 converted, ppm

$[NO_x]_{orig}$=original NO_x concentration prior to addition of O_3, ppm

$[NO_x]_{rem}$=NO_x concentration remaining after addition of O_3, ppm

NOTE: Supplemental information on calibration and other procedures in this method are given in reference 13.

Plot $[NO_2]_{CONV}$ (y-axis) versus $[NO_2]_{OUT}$ (x-axis) and draw or calculate the converter efficiency curve. The slope of the curve times 100 is the average converter efficiency, E_C. The average converter efficiency must be greater than 96%; if it is less than 96%, replace or service the converter.

2. *Alternative B*—NO_2 permeation device.

Major equipment required:

Stable O_3 generator.

Chemiluminescence $NO/NO_x/NO_2$ analyzer with strip chart recorder(s).

NO concentration standard.

NO_2 concentration standard.

2.1 *Principle.* Atmospheres containing accurately known concentrations of nitrogen dioxide are generated by means of a permeation device. (*10*) The permeation device emits NO_2 at a known constant rate provided the temperature of the device is held constant (±0.1° C) and the device has been accurately calibrated at the temperature of use. The NO_2 emitted from the device is diluted with zero air to produce NO_2 concentrations suitable for calibration of the NO_2 channel of the $NO/NO_x/NO_2$ analyzer. An NO concentration standard is used for calibration of the NO and NO_x channels of the analyzer.

2.2 *Apparatus.* A typical system suitable for generating the required NO and NO_2 concentrations is shown in Figure 2. All connections between components downstream from the permeation device should be of glass, Teflon®, or other non-reactive material.

2.2.1 *Air flow controllers.* Devices capable of maintaining constant air flows within ±2% of the required flowrate.

2.2.2 *NO flow controller.* A device capable of maintaining constant NO flows within ±2% of the required flowrate. Component parts in contact with the NO must be of a non-reactive material.

2.2.3 *Air flowmeters.* Calibrated flowmeters capable of measuring and monitoring air flowrates with an accuracy of ±2% of the measured flowrate.

2.2.4 *NO flowmeter.* A calibrated flowmeter capable of measuring and monitoring NO flowrates with an accuracy of ±2% of the measured flowrate. (Rotameters have been reported to operate unreliably when measuring low NO flows and are not recommended.)

2.2.5 *Pressure regulator for standard NO cylinder.* This regulator must have a non-reactive diaphragm and internal parts and a suitable delivery pressure.

2.2.6 *Drier.* Scrubber to remove moisture from the permeation device air system. The use of the drier is optional with NO_2 permeation devices not sensitive to moisture. (Refer to the supplier's instructions for use of the permeation device.)

2.2.7 *Constant temperature chamber.* Chamber capable of housing the NO_2 permeation device and maintaining its temperature to within ±0.1°C.

2.2.8 *Temperature measuring device.* Device capable of measuring and monitoring the temperature of the NO_2 permeation device with an accuracy of ±0.05°C.

2.2.9 *Valves.* A valve may be used as shown in Figure 2 to divert the NO_2 from the permeation device when zero air or NO is required at the manifold. A second valve may be used to divert the NO flow when zero air or NO_2 is required at the manifold.

The valves should be constructed of glass, Teflon®, or other nonreactive material.

2.2.10 *Mixing chamber.* A chamber constructed of glass, Teflon®, or other nonreactive material and designed to provide thorough mixing of pollutant gas streams and diluent air.

2.2.11 *Output manifold.* The output manifold should be constructed of glass, Teflon®, or other non-reactive material and should be of sufficient diameter to insure an insignificant pressure drop at the analyzer connection. The system must have a vent designed to insure atmospheric pressure at the manifold and to prevent ambient air from entering the manifold.

2.3 *Reagents.*

2.3.1 *Calibration standards.* Calibration standards are required for both NO and NO_2. The reference standard for the calibration may be either an NO or NO_2 standard, and must be traceable to a National Bureau of Standards (NBS) NO in N_2 Standard Reference Material (SRM 1683 or SRM 1684), and NBS NO_2 Standard Reference Material (SRM 1629), or an NBS/EPA-approved commercially available Certified Reference Material (CRM). CRM's are described in Reference 14, and a list of CRM sources is available from the address shown for Reference 14. Reference 15 gives recommended procedures for certifying an NO gas cylinder against an NO SRM or CRM and for certifying an NO_2 permeation device against an NO_2 SRM. Reference 13 contains procedures for certifying an NO gas cylinder against an NO_2 SRM and for certifying an NO_2 permeation device against an NO SRM or CRM. A procedure for determining the amount of NO_2 impurity in an NO cylinder is also contained in Reference 13. The NO or NO_2 standard selected as the reference standard must be used to certify the other standard to ensure consistency between the two standards.

2.3.1.1 *NO_2 Concentration standard.* A permeation device suitable for generating NO_2 concentrations at the required flow-rates over the required concentration range. If the permeation device is used as the reference standard, it must be traceable to an SRM or CRM as specified in 2.3.1. If an NO cylinder is used as the reference standard, the NO_2 permeation device must be certified against the NO standard according to the procedure given in Reference 13. The use of the permeation device should be in strict accordance with the instructions supplied with the device. Additional information regarding the use of permeation devices is given by Scaringelli et al. (11) and Rook et al. (12).

2.3.1.2 *NO Concentration standard.* Gas cylinder containing 50 to 100 ppm NO in N_2 with less than 1 ppm NO_2. If this cylinder is used as the reference standard, the cylinder must be traceable to an SRM or CRM as specified in 2.3.1. If an NO_2 permeation device is used as the reference standard, the NO cylinder must be certified against the NO_2 standard according to the procedure given in Reference 13. The cylinder should be recertified on a regular basis as determined by the local quality control program.

2.3.3 *Zero air.* Air, free of contaminants which might react with NO or NO_2 or cause a detectable response on the $NO/NO_x/NO_2$ analyzer. When using permeation devices that are sensitive to moisture, the zero air passing across the permeation device must be dry to avoid surface reactions on the device. (Refer to the supplier's instructions for use of the permeation device.) A procedure for generating zero air is given in reference 13.

2.4 *Procedure.*

2.4.1 Assemble the calibration apparatus such as the typical one shown in Figure 2.

2.4.2 Insure that all flowmeters are calibrated under the conditions of use against a reliable standard such as a soap bubble meter or wet-test meter. All volumetric flowrates should be corrected to 25° C and 760 mm Hg. A discussion on the calibration of flowmeters is given in reference 13.

2.4.3 Install the permeation device in the constant temperature chamber. Provide a small fixed air flow (200–400 scm^3/min) across the device. The permeation device should always have a continuous air flow across it to prevent large buildup of NO_2 in the system and a consequent restabilization period. Record the flowrate as FP. Allow the device to stabilize at the calibration temperature for at least 24 hours. The temperature must be adjusted and controlled to within ±0.1°C or less of the calibration temperature as monitored with the temperature measuring device.

2.4.4 Precautions must be taken to remove O_2 and other contaminants from the NO pressure regulator and delivery system prior to the start of calibration to avoid any conversion of the standard NO to NO_2. Failure to do so can cause significant errors in calibration. This problem may be minimized by

(1) Carefully evacuating the regulator, when possible, after the regulator has been connected to the cylinder and before opening the cylinder valve;

(2) Thoroughly flushing the regulator and delivery system with NO after opening the cylinder valve;

(3) Not removing the regulator from the cylinder between calibrations unless absolutely necessary. Further discussion of these procedures is given in reference 13.

2.4.5 Select the operating range of the NO/$NO_x$$NO_2$ analyzer to be calibrated. In order to obtain maximum precision and accuracy for NO_2 calibration, all three channels of the analyzer should be set to the same range. If operation of the NO and NO_x channels on higher ranges is desired, subsequent recalibration of the NO and NO_x channels on the higher ranges is recommended.

NOTE: Some analyzer designs may require identical ranges for NO, NO_x, and NO_2 during operation of the analyzer.

2.4.6 Connect the recorder output cable(s) of the NO/NO_x/NO_2 analyzer to the input terminals of the strip chart recorder(s). All adjustments to the analyzer should be performed based on the appropriate strip chart readings. References to analyzer responses in the procedures given below refer to recorder responses.

2.4.7 Switch the valve to vent the flow from the permeation device and adjust the diluent air flowrate, F_D, to provide zero air at the output manifold. The total air flow must exceed the total demand of the analyzer(s) connected to the output manifold to insure that no ambient air is pulled into the manifold vent. Allow the analyzer to sample zero air until stable NO, NO_x, and NO_2 responses are obtained. After the responses have stabilized, adjust the analyzer zero control(s).

NOTE: Some analyzers may have separate zero controls for NO, NO_x, and NO_2. Other analyzers may have separate zero controls only for NO and NO_x, while still others may have only one zero common control to all three channels.

Offsetting the analyzer zero adjustments to +5% of scale is recommended to facilitate observing negative zero drift. Record the stable zero air responses as Z_{NO}, Z_{NOx}, and Z_{NO2}.

2.4.8 Preparation of NO and NO_x calibration curves.

2.4.8.1 Adjustment of NO span control. Adjust the NO flow from the standard NO cylinder to generate an NO concentration of approximately 80% of the upper range limit (URL) of the NO range. The exact NO concentration is calculated from:

$$[NO]_{OUT} = \frac{F_{NO} \times [NO]_{STD}}{F_{NO} + F_D} \qquad (16)$$

where:

$[NO]_{OUT}$=diluted NO concentration at the output manifold, ppm

F_{NO}=NO flowrate, scm^3/min

$[NO]_{STD}$=concentration of the undiluted NO standard, ppm

F_D=diluent air flowrate, scm^3/min

Sample this NO concentration until the NO and NO_x responses have stabilized. Adjust the NO span control to obtain a recorder response as indicated below:

recorder response (% scale) =

$$= \left(\frac{[NO]_{OUT}}{URL} \times 100 \right) + Z_{NO} \qquad (17)$$

$$= \left(\frac{[NO_X]_{OUT}}{URL} \times 100 \right) + Z_{NO_X} \qquad (19)$$

where:

URL=nominal upper range limit of the NO channel, ppm

NOTE: Some analyzers may have separate span controls for NO, NO_x, and NO_2. Other analyzers may have separate span controls only for NO and NO_x, while still others may have only one span control common to all three channels. When only one span control

is available, the span adjustment is made on the NO channel of the analyzer.

If substantial adjustment of the NO span control is necessary, it may be necessary to recheck the zero and span adjustments by repeating steps 2.4.7 and 2.4.8.1. Record the NO concentration and the analyzer's NO response.

2.4.8.2 *Adjustment of NO_x span control.* When adjusting the analyzer's NO_x span control, the presence of any NO_2 impurity in the standard NO cylinder must be taken into account. Procedures for determining the amount of NO_2 impurity in the standard NO cylinder are given in reference 13. The exact NO_x concentration is calculated from:

$$[NO_X]_{OUT} = \frac{F_{NO} \times \left([NO]_{STD} + [NO_2]_{IMP}\right)}{F_{NO} + F_D} \quad (18)$$

where:

$[NO_x]_{OUT}$=diluted NO_x cencentration at the output manifold, ppm

$[NO_2]_{IMP}$=concentration of NO_2 impurity in the standard NO cylinder, ppm

Adjust the NO_x span control to obtain a convenient recorder response as indicated below:

recorder response (% scale)

$$= \left(\frac{[NO_X]_{OUT}}{URL} \times 100 \right) + Z_{NO_X} \quad (19)$$

NOTE: If the analyzer has only one span control, the span adjustment is made on the NO channel and no further adjustment is made here for NO_x.

If substantial adjustment of the NO_x span control is necessary, it may be necessary to recheck the zero and span adjustments by repeating steps 2.4.7 and 2.4.8.2. Record the NO_x concentration and the analyzer's NO_x response.

2.4.8.3 Generate several additional concentrations (at least five evenly spaced points across the remaining scale are suggested to verify linearity) by decreasing F_{NO} or increasing F_D. For each concentration generated, calculate the exact NO and NO_x concentrations using equations (16) and (18) respectively. Record the analyzer's NO and NO_x responses for each concentration. Plot the analyzer responses versus the respective calculated NO and NO_x concentrations and draw or calculate the NO and NO_x calibration curves. For subsequent calibrations where linearity can be assumed, these curves may be checked with a two-point calibration consisting of a zero point and NO and NO_x concentrations of approximately 80 percent of the URL.

2.4.9 Preparation of NO_2 calibration curve.

2.4.9.1 Remove the NO flow. Assuming the NO_2 zero has been properly adjusted while sampling zero air in step 2.4.7, switch the valve to provide NO_2 at the output manifold.

2.4.9.2 Adjust F_D to generate an NO_2 concentration of approximately 80 percent of the *URL* of the NO_2 range. The total air flow must exceed the demand of the analyzer(s) under calibration. The actual concentration of NO_2 is calculated from:

$$[NO_2]_{OUT} = \frac{R \times K}{F_P + F_D} \quad (20)$$

where:

$[NO_2]_{OUT}$=diluted NO_2 concentration at the output manifold, ppm

R=permeation rate, µg/min

K=0.532µl NO_2/µg NO_2 (at 25°C and 760 mm Hg)

F_P=air flowrate across permeation device, scm^3/min

F_D=diluent air flowrate, scm^3/min

Sample this NO_2 concentration until the NO_x and NO_2 responses have stabilized. Adjust the NO_2 span control to obtain a recorder response as indicated below:

recorder response (% scale)

$$= \left(\frac{[NO_2]_{OUT}}{URL} \times 100 \right) + Z_{NO2} \quad (21)$$

NOTE: If the analyzer has only one or two span controls, the span adjustments are made on the NO channel or NO and NO_x channels and no further adjustment is made here for NO_2.

If substantial adjustment of the NO_2 span control is necessary it may be necessary to recheck the zero and span adjustments by repeating steps 2.4.7 and 2.4.9.2. Record the NO_2 concentration and the analyzer's NO_2 response. Using the NO_x calibration curve obtained in step 2.4.8, measure and record the NO_x concentration as $[NO_x]_M$.

2.4.9.3 Adjust F_D to obtain several other concentrations of NO_2 over the NO_2 range (at least five evenly spaced points across the remaining scale are suggested). Calculate each NO_2 concentration using equation (20) and record the corresponding analyzer NO_2 and NO_x responses. Plot the analyzer's NO_2 responses versus the corresponding calculated NO_2 concentrations and draw or calculate the NO_2 calibration curve.

2.4.10 *Determination of converter efficiency.*

2.4.10.1 Plot $[NO_x]_M$ (y-axis) versus $[NO_2]_{OUT}$ (x-axis) and draw or calculate the converter efficiency curve. The slope of the curve times 100 is the average converter efficiency, E_C. The average converter efficiency must be greater than 96 percent; if it is less than 96 percent, replace or service the converter.

NOTE: Supplemental information on calibration and other procedures in this method are given in reference 13.

3. *Frequency of calibration.* The frequency of calibration, as well as the number of points necessary to establish the calibration curve and the frequency of other performance checks, will vary from one analyzer to another. The user's quality control program should provide guidelines for initial establishment of these variables and for subsequent alteration as operational experience is accumulated. Manufacturers of analyzers should include in their instruction/operation manuals information and guidance as to these variables and on other matters of operation, calibration, and quality control.

REFERENCES

1. A. Fontijn, A. J. Sabadell, and R. J. Ronco, ''Homogeneous Chemiluminescent Measurement of Nitric Oxide with Ozone,'' Anal. Chem., 42, 575 (1970).

2. D. H. Stedman, E. E. Daby, F. Stuhl, and H. Niki, ''Analysis of Ozone and Nitric Oxide by a Chemiluminiscent Method in Laboratory and Atmospheric Studies of Photochemical Smog,'' J. Air Poll. Control Assoc., 22, 260 (1972).

3. B. E. Martin, J. A. Hodgeson, and R. K. Stevens, ''Detection of Nitric Oxide Chemiluminescence at Atmospheric Pressure,'' Presented at 164th National ACS Meeting, New York City, August 1972.

4. J. A. Hodgeson, K. A. Rehme, B. E. Martin, and R. K. Stevens, ''Measurements for Atmospheric Oxides of Nitrogen and Ammonia by Chemiluminescence,'' Presented at 1972 APCA Meeting, Miami, FL, June 1972.

5. R. K. Stevens and J. A. Hodgeson, ''Applications of Chemiluminescence Reactions to the Measurement of Air Pollutants,'' Anal. Chem., 45, 443A (1973).

6. L. P. Breitenbach and M. Shelef, ''Development of a Method for the Analysis of NO_2 and NH_3 by NO-Measuring Instruments,'' J. Air Poll. Control Assoc., 23, 128 (1973).

7. A. M. Winer, J. W. Peters, J. P. Smith, and J. N. Pitts, Jr., ''Response of Commercial Chemiluminescent NO-NO_2 Analyzers to Other Nitrogen-Containing Compounds,'' Environ. Sci. Technol., 8, 1118 (1974).

8. K. A. Rehme, B. E. Martin, and J. A. Hodgeson, Tentative Method for the Calibration of Nitric Oxide, Nitrogen Dioxide, and Ozone Analyzers by Gas Phase Titration,'' EPA–R2–73–246, March 1974.

9. J. A. Hodgeson, R. K. Stevens, and B. E. Martin, ''A Stable Ozone Source Applicable as a Secondary Standard for Calibration of Atmospheric Monitors,'' ISA Transactions, 11, 161 (1972).

10. A. E. O'Keeffe and G. C. Ortman, ''Primary Standards for Trace Gas Analysis,'' Anal. Chem., 38, 760 (1966).

11. F. P. Scaringelli, A. E. O'Keeffe, E. Rosenberg, and J. P. Bell, ''Preparation of Known Concentrations of Gases and Vapors with Permeation Devices Calibrated Gravimetrically,'' Anal. Chem., 42, 871 (1970).

12. H. L. Rook, E. E. Hughes, R. S. Fuerst, and J. H. Margeson, ''Operation Characteristics of NO_2 Permeation Devices,'' Presented at 167th National ACS Meeting, Los Angeles, CA, April 1974.

13. E. C. Ellis, ''Technical Assistance Document for the Chemiluminescence Measurement of Nitrogen Dioxide,'' EPA–E600/4–75–003 (Available in draft form from the United States Environmental Protection Agency, Department E (MD–76), Environmental Monitoring and Support Laboratory, Research Triangle Park, NC 27711).

14. A Procedure for Establishing Traceability of Gas Mixtures to Certain National Bureau of Standards Standard Reference Materials. EPA–600/7–81–010, Joint publication by NBS and EPA. Available from the U.S. Environmental Protection Agency, Environmental Monitoring Systems Laboratory (MD–77), Research Triangle Park, NC 27711, May 1981.

15. *Quality Assurance Handbook for Air Pollution Measurement Systems, Volume II, Ambient Air Specific Methods.* The U.S. Environmental Protection Agency, Environmental Monitoring Systems Laboratory, Research Triangle Park, NC 27711. Publication No. EAP–600/4–77–027a.

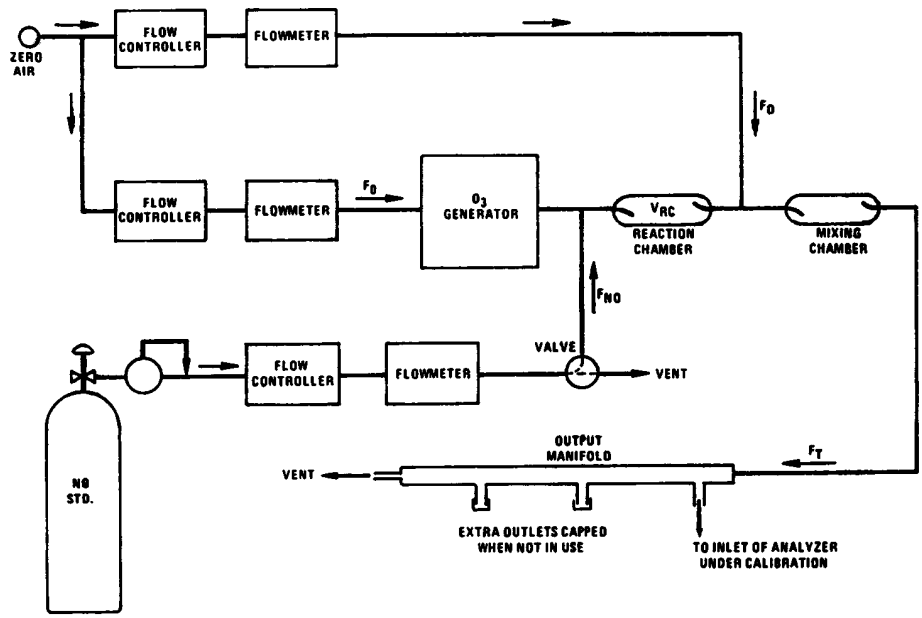

Figure 1. Schematic diagram of a typical GPT calibration system.

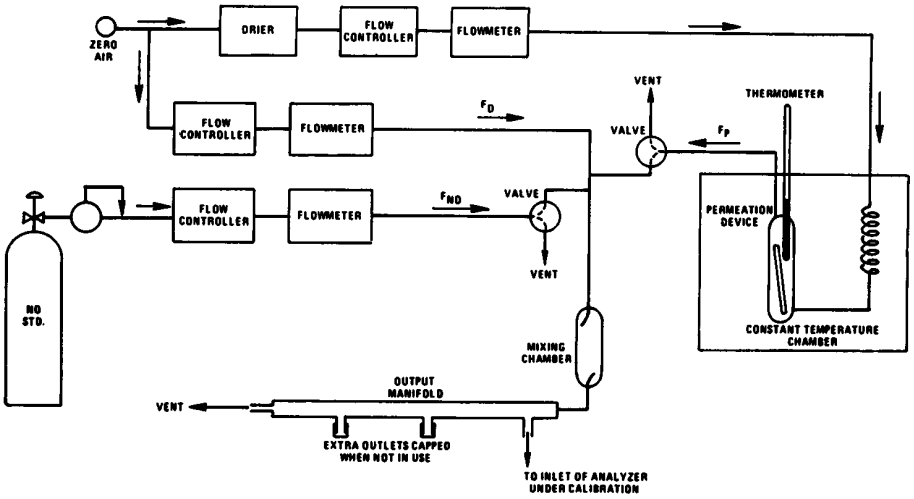

Figure 2. Schematic diagram of a typical calibration apparatus using an NO_2 permeation device.

[41 FR 52688, Dec. 1, 1976, as amended at 48 FR 2529, Jan 20, 1983]

APPENDIX G TO PART 50—REFERENCE METHOD FOR THE DETERMINATION OF LEAD IN SUSPENDED PARTICULATE MATTER COLLECTED FROM AMBIENT AIR

1. *Principle and applicability.*

1.1 Ambient air suspended particulate matter is collected on a glass-fiber filter for 24 hours using a high volume air sampler. The analysis of the 24-hour samples may be performed for either individual samples or composites of the samples collected over a calendar month or quarter, provided that the compositing procedure has been approved in accordance with section 2.8 of appendix C to part 58 of this chapter—*Modifications of methods by users.* (Guidance or assistance in requesting approval under Section 2.8 can be obtained from the address given in section 2.7 of appendix C to Part 58 of this chapter.)

1.2 Lead in the particulate matter is solubilized by extraction with nitric acid (HNO_3), facilitated by heat or by a mixture of HNO_3 and hydrochloric acid (HCl) facilitated by ultrasonication.

1.3 The lead content of the sample is analyzed by atomic absorption spectrometry using an air-acetylene flame, the 283.3 or 217.0 nm lead absorption line, and the optimum instrumental conditions recommended by the manufacturer.

1.4 The ultrasonication extraction with HNO_3/HCl will extract metals other than lead from ambient particulate matter.

2. *Range, sensitivity, and lower detectable limit.* The values given below are typical of the methods capabilities. Absolute values will vary for individual situations depending on the type of instrument used, the lead line, and operating conditions.

2.1 *Range.* The typical range of the method is 0.07 to 7.5 µg Pb/m^3 assuming an upper linear range of analysis of 15 µg/ml and an air volume of 2,400 m^3.

2.2 *Sensitivity.* Typical sensitivities for a 1 percent change in absorption (0.0044 absorbance units) are 0.2 and 0.5 µg Pb/ml for the 217.0 and 283.3 nm lines, respectively.

2.3 *Lower detectable limit (LDL).* A typical LDL is 0.07 µg Pb/m^3. The above value was calculated by doubling the between-laboratory standard deviation obtained for the lowest measurable lead concentration in a collaborative test of the method.(*15*) An air volume of 2,400 m^3 was assumed.

3. *Interferences.* Two types of interferences are possible: chemical and light scattering.

3.1 *Chemical.* Reports on the absence *(1, 2, 3, 4, 5)* of chemical interferences far outweigh those reporting their presence, *(6)* therefore, no correction for chemical interferences is given here. If the analyst suspects that the sample matrix is causing a chemical interference, the interference can be verified and corrected for by carrying out the analysis

with and without the method of standard additions.*(7)*

3.2 *Light scattering.* Nonatomic absorption or light scattering, produced by high concentrations of dissolved solids in the sample, can produce a significant interference, especially at low lead concentrations. (*2*) The interference is greater at the 217.0 nm line than at the 283.3 nm line. No interference was observed using the 283.3 nm line with a similar method.(*1*)

Light scattering interferences can, however, be corrected for instrumentally. Since the dissolved solids can vary depending on the origin of the sample, the correction may be necessary, especially when using the 217.0 nm line. Dual beam instruments with a continuum source give the most accurate correction. A less accurate correction can be obtained by using a nonabsorbing lead line that is near the lead analytical line. Information on use of these correction techniques can be obtained from instrument manufacturers' manuals.

If instrumental correction is not feasible, the interference can be eliminated by use of the ammonium pyrrolidinecarbodithioate-methylisobutyl ketone, chelation-solvent extraction technique of sample preparation.(*8*)

4. *Precision and bias.*

4.1 The high-volume sampling procedure used to collect ambient air particulate matter has a between-laboratory relative standard deviation of 3.7 percent over the range 80 to 125 µg/m^3.(*9*) The combined extraction-analysis procedure has an average within-laboratory relative standard deviation of 5 to 6 percent over the range 1.5 to 15 µg Pb/ml, and an average between laboratory relative standard deviation of 7 to 9 percent over the same range. These values include use of either extraction procedure.

4.2 Single laboratory experiments and collaborative testing indicate that there is no significant difference in lead recovery between the hot and ultrasonic extraction procedures.(*15*)

5. *Apparatus.*

5.1 *Sampling.*

5.1.1 *High-Volume Sampler.* Use and calibrate the sampler as described in appendix B to this part.

5.2 *Analysis.*

5.2.1 *Atomic absorption spectrophotometer.* Equipped with lead hollow cathode or electrodeless discharge lamp.

5.2.1.1 *Acetylene.* The grade recommended by the instrument manufacturer should be used. Change cylinder when pressure drops below 50–100 psig.

5.2.1.2 *Air.* Filtered to remove particulate, oil, and water.

5.2.2 *Glassware.* Class A borosilicate glassware should be used throughout the analysis.

5.2.2.1 *Beakers.* 30 and 150 ml. graduated, Pyrex.

5.2.2.2 *Volumetric flasks.* 100-ml.

5.2.2.3 *Pipettes.* To deliver 50, 30, 15, 8, 4, 2, 1 ml.

5.2.2.4 *Cleaning.* All glassware should be scrupulously cleaned. The following procedure is suggested. Wash with laboratory detergent, rinse, soak for 4 hours in 20 percent (w/w) HNO_3, rinse 3 times with distilled-deionized water, and dry in a dust free manner.

5.2.3 *Hot plate.*

5.2.4. *Ultrasonication water bath, unheated.* Commercially available laboratory ultrasonic cleaning baths of 450 watts or higher ''cleaning power,'' i.e., actual ultrasonic power output to the bath have been found satisfactory.

5.2.5 *Template.* To aid in sectioning the glass-fiber filter. See figure 1 for dimensions.

5.2.6 *Pizza cutter.* Thin wheel. Thickness 1mm.

5.2.7 *Watch glass.*

5.2.8 *Polyethylene bottles.* For storage of samples. Linear polyethylene gives better storage stability than other polyethylenes and is preferred.

5.2.9 Parafilm ''M''.[1] American Can Co., Marathon Products, Neenah, Wis., or equivalent.

6. *Reagents.*

6.1 *Sampling.*

6.1.1 *Glass fiber filters.* The specifications given below are intended to aid the user in obtaining high quality filters with reproducible properties. These specifications have been met by EPA contractors.

6.1.1.1 *Lead content.* The absolute lead content of filters is not critical, but low values are, of course, desirable. EPA typically obtains filters with a lead content of 75 µg/filter.

It is important that the variation in lead content from filter to filter, within a given batch, be small.

6.1.1.2 *Testing.*

6.1.1.2.1 For large batches of filters (>500 filters) select at random 20 to 30 filters from a given batch. For small batches (>500 filters) a lesser number of filters may be taken. Cut one ¾″x8″ strip from each filter anywhere in the filter. Analyze all strips, separately, according to the directions in sections 7 and 8.

6.1.1.2.2 Calculate the total lead in each filter as

$$F_b = \mu g\ Pb/ml \times \frac{100\ ml}{strip} \times \frac{12\ strips}{filter}$$

where:

F_b=Amount of lead per 72 square inches of filter, µg.

[1] Mention of commercial products does not imply endorsement by the U.S. Environmental Protection Agency.

6.1.1.2.3 Calculate the mean, F_b, of the values and the relative standard deviation (standard deviation/mean × 100). If the relative standard deviation is high enough so that, in the analysts opinion, subtraction of F_b, (section 10.3) may result in a significant error in the µg Pb/m^3, the batch should be rejected.

6.1.1.2.4 For acceptable batches, use the value of F_b to correct all lead analyses (section 10.3) of particulate matter collected using that batch of filters. If the analyses are below the LDL (section 2.3) no correction is necessary.

6.2 *Analysis.*

6.2.1 Concentrated (15.6 *M)* HNO_3. ACS reagent grade HNO_3 and commercially available redistilled HNO_3 has found to have sufficiently low lead concentrations.

6.2.2 Concentrated (11.7 *M*) HCl. ACS reagent grade.

6.2.3 *Distilled-deionized water.* (D.I. water).

6.2.4 3 *M* HNO_3. This solution is used in the hot extraction procedure. To prepare, add 192 ml of concentrated HNO_3 to D.I. water in a 1 *l* volumetric flask. Shake well, cool, and dilute to volume with D.I. water. *Caution:* Nitric acid fumes are toxic. Prepare in a well ventilated fume hood.

6.2.5 0.45 *M* HNO_3. This solution is used as the matrix for calibration standards when using the hot extraction procedure. To prepare, add 29 ml of concentrated HNO_3 to D.I. water in a 1 *l* volumetric flask. Shake well, cool, and dilute to volume with D.I. water.

6.2.6 2.6 *M* HNO_3+0 to 0.9 *M* HCl. This solution is used in the ultrasonic extraction procedure. The concentration of HCl can be varied from 0 to 0.9 *M*. Directions are given for preparation of a 2.6 *M* HNO_3+0.9 *M* HCl solution. Place 167 ml of concentrated HNO_3 into a 1 *l* volumetric flask and add 77 ml of concentrated HCl. Stir 4 to 6 hours, dilute to nearly 1 *l* with D.I. water, cool to room temperature, and dilute to 1 *l*.

6.2.7 0.40 *M* HNO_3 + X *M* HCl. This solution is used as the matrix for calibration standards when using the ultrasonic extraction procedure. To prepare, add 26 ml of concentrated HNO_3, plus the ml of HCl required, to a 1 *l* volumetric flask. Dilute to nearly 1 *l* with D.I. water, cool to room temperature, and dilute to 1 *l*. The amount of HCl required can be determined from the following equation:

$$y = \frac{77\,\text{ml} \times 0.15 \times}{0.9\,\text{M}}$$

where:

y = ml of concentrated HCl required.
x = molarity of HCl in 6.2.6.
0.15 = dilution factor in 7.2.2.

6.2.8 Lead nitrate, $Pb(NO_3)_2$. ACS reagent grade, purity 99.0 percent. Heat for 4 hours at 120° C and cool in a desiccator.

6.3 *Calibration standards.*

6.3.1 Master standard, 1000 µg Pb/ml in HNO_3. Dissolve 1.598 g of $Pb(NO_3)_2$ in 0.45 *M* HNO_3 contained in a 1 *l* volumetric flask and dilute to volume with 0.45 *M* HNO_3.

6.3.2 Master standard, 1000 µg Pb/ml in HNO_3/HCl. Prepare as in section 6.3.1 except use the HNO_3/HCl solution in section 6.2.7.

Store standards in a polyethylene bottle. Commercially available certified lead standard solutions may also be used.

7. *Procedure.*

7.1 *Sampling.* Collect samples for 24 hours using the procedure described in reference *10* with glass-fiber filters meeting the specifications in section 6.1.1. Transport collected samples to the laboratory taking care to minimize contamination and loss of sample. (*16).*

7.2 *Sample preparation.*

7.2.1 *Hot extraction procedure.*

7.2.1.1 Cut a ¾″ x 8″ strip from the exposed filter using a template and a pizza cutter as described in Figures 1 and 2. Other cutting procedures may be used.

Lead in ambient particulate matter collected on glass fiber filters has been shown to be uniformly distributed across the filter.[1,3,11] Another study[12] has shown that when sampling near a roadway, strip position contributes significantly to the overall variability associated with lead analyses. Therefore, when sampling near a roadway, additional strips should be analyzed to minimize this variability.

7.2.1.2 Fold the strip in half twice and place in a 150-ml beaker. Add 15 ml of 3 *M* HNO_3 to cover the sample. The acid should completely cover the sample. Cover the beaker with a watch glass.

7.2.1.3 Place beaker on the hot-plate, contained in a fume hood, and boil gently for 30 min. Do not let the sample evaporate to dryness. *Caution:* Nitric acid fumes are toxic.

7.2.1.4 Remove beaker from hot plate and cool to near room temperature.

7.2.1.5 Quantitatively transfer the sample as follows:

7.2.1.5.1 Rinse watch glass and sides of beaker with D.I. water.

7.2.1.5.2 Decant extract and rinsings into a 100-ml volumetric flask.

7.2.1.5.3 Add D.I. water to 40 ml mark on beaker, cover with watch glass, and set aside for a minimum of 30 minutes. This is a critical step and cannot be omitted since it allows the HNO_3 trapped in the filter to diffuse into the rinse water.

7.2.1.5.4 Decant the water from the filter into the volumetric flask.

7.2.1.5.5 Rinse filter and beaker twice with D.I. water and add rinsings to volumetric flask until total volume is 80 to 85 ml.

7.2.1.5.6 Stopper flask and shake vigorously. Set aside for approximately 5 minutes or until foam has dissipated.

7.2.1.5.7 Bring solution to volume with D.I. water. Mix thoroughly.

7.2.1.5.8 Allow solution to settle for one hour before proceeding with analysis.

7.2.1.5.9 If sample is to be stored for subsequent analysis, transfer to a linear polyethylene bottle.

7.2.2 *Ultrasonic extraction procedure.*

7.2.2.1 Cut a ¾″ x 8″ strip from the exposed filter as described in section 7.2.1.1.

7.2.2.2 Fold the strip in half twice and place in a 30 ml beaker. Add 15 ml of the HNO_3/HCl solution in section 6.2.6. The acid should completely cover the sample. Cover the beaker with parafilm.

The parafilm should be placed over the beaker such that none of the parafilm is in contact with water in the ultrasonic bath. Otherwise, rinsing of the parafilm (section 7.2.2.4.1) may contaminate the sample.

7.2.2.3 Place the beaker in the ultrasonication bath and operate for 30 minutes.

7.2.2.4 Quantitatively transfer the sample as follows:

7.2.2.4.1 Rinse parafilm and sides of beaker with D.I. water.

7.2.2.4.2 Decant extract and rinsings into a 100 ml volumetric flask.

7.2.2.4.3 Add 20 ml D.I. water to cover the filter strip, cover with parafilm, and set aside for a minimum of 30 minutes. This is a critical step and cannot be omitted. The sample is then processed as in sections 7.2.1.5.4 through 7.2.1.5.9.

NOTE: Samples prepared by the hot extraction procedure are now in 0.45 *M* HNO_3. Samples prepared by the ultrasonication procedure are in 0.40 *M* HNO_3 + X *M* HCl.

8. *Analysis.*

8.1 Set the wavelength of the monochromator at 283.3 or 217.0 nm. Set or align other instrumental operating conditions as recommended by the manufacturer.

8.2 The sample can be analyzed directly from the volumetric flask, or an appropriate amount of sample decanted into a sample analysis tube. In either case, care should be taken not to disturb the settled solids.

8.3 Aspirate samples, calibration standards and blanks (section 9.2) into the flame and record the equilibrium absorbance.

8.4 Determine the lead concentration in µg Pb/ml, from the calibration curve, section 9.3.

8.5 Samples that exceed the linear calibration range should be diluted with acid of the same concentration as the calibration standards and reanalyzed.

9. *Calibration.*

9.1 Working standard, 20 µg Pb/ml. Prepared by diluting 2.0 ml of the master standard (section 6.3.1 if the hot acid extraction was used or section 6.3.2 if the ultrasonic extraction procedure was used) to 100 ml with acid of the same concentration as used in preparing the master standard.

9.2 *Calibration standards.* Prepare daily by diluting the working standard, with the same acid matrix, as indicated below. Other lead concentrations may be used.

Volume of 20 µg/ml working standard, ml	Final volume, ml	Concentration µg Pb/ml
0	100	0
1.0	200	0.1
2.0	200	0.2
2.0	100	0.4
4.0	100	0.8
8.0	100	1.6
15.0	100	3.0
30.0	100	6.0
50.0	100	10.0
100.0	100	20.0

9.3 *Preparation of calibration curve.* Since the working range of analysis will vary depending on which lead line is used and the type of instrument, no one set of instructions for preparation of a calibration curve can be given. Select standards (plus the reagent blank), in the same acid concentration as the samples, to cover the linear absorption range indicated by the instrument manufacturer. Measure the absorbance of the blank and standards as in section 8.0. Repeat until good agreement is obtained between replicates. Plot absorbance (y-axis) versus concentration in µg Pb/ml (x-axis). Draw (or compute) a straight line through the linear portion of the curve. Do not force the calibration curve through zero. Other calibration procedures may be used.

To determine stability of the calibration curve, remeasure—alternately—one of the following calibration standards for every 10th sample analyzed: Concentration $\leq$ 1µg Pb/ml; concentration $\leq$ 10 µg Pb/ml. If either standard deviates by more than 5 percent from the value predicted by the calibration curve, recalibrate and repeat the previous 10 analyses.

10. *Calculation.*

10.1 *Measured air volume.* Calculate the measured air volume at Standard Temperature and Pressure as described in Reference 10.

10.2 *Lead concentration.* Calculate lead concentration in the air sample.

$$C = \frac{(\mu g\ Pb/ml \times 100\ ml/strip \times 12\ strips/filter) - \bar{F}_b}{V_{STP}}$$

where:

C=Concentration, μg Pb/sm³.

μg Pb/ml=Lead concentration determined from section 8.

100 ml/strip=Total sample volume.

12 strips=Total useable filter area, 8″ × 9″. Exposed area of one strip, ¾″×7″.

Filter=Total area of one strip, ¾″×8″.

F_b=Lead concentration of blank filter, μg, from section 6.1.1.2.3.

V_{STP}=Air volume from section 10.2.

11. *Quality control.*

¾″ × 8″ glass fiber filter strips containing 80 to 2000 μg Pb/strip (as lead salts) and blank strips with zero Pb content should be used to determine if the method—as being used—has any bias. Quality control charts should be established to monitor differences between measured and true values. The frequency of such checks will depend on the local quality control program.

To minimize the possibility of generating unreliable data, the user should follow practices established for assuring the quality of air pollution data, (*13*) and take part in EPA's semiannual audit program for lead analyses.

12. *Trouble shooting.*

1. During extraction of lead by the hot extraction procedure, it is important to keep the sample covered so that corrosion products—formed on fume hood surfaces which may contain lead—are not deposited in the extract.

2. The sample acid concentration should minimize corrosion of the nebulizer. However, different nebulizers may require lower acid concentrations. Lower concentrations can be used provided samples and standards have the same acid concentration.

3. Ashing of particulate samples has been found, by EPA and contractor laboratories, to be unnecessary in lead analyses by atomic absorption. Therefore, this step was omitted from the method.

4. Filtration of extracted samples, to remove particulate matter, was specifically excluded from sample preparation, because some analysts have observed losses of lead due to filtration.

5. If suspended solids should clog the nebulizer during analysis of samples, centrifuge the sample to remove the solids.

13. *Authority.*

(Secs. 109 and 301(a), Clean Air Act, as amended (42 U.S.C. 7409, 7601(a)))

14. *References.*

1. Scott, D. R. et al. ''Atomic Absorption and Optical Emission Analysis of NASN Atmospheric Particulate Samples for Lead.'' *Envir. Sci. and Tech., 10,* 877–880 (1976).

2. Skogerboe, R. K. et al. ''Monitoring for Lead in the Environment.'' pp. 57–66, Department of Chemistry, Colorado State University, Fort Collins, CO 80523. Submitted to National Science Foundation for publications, 1976.

3. Zdrojewski, A. et al. ''The Accurate Measurement of Lead in Airborne Particulates.'' *Inter. J. Environ. Anal. Chem., 2,* 63–77 (1972).

4. Slavin, W., ''Atomic Absorption Spectroscopy.'' Published by Interscience Company, New York, NY (1968).

5. Kirkbright, G. F., and Sargent, M., ''Atomic Absorption and Fluorescence Spectroscopy.'' Published by Academic Press, New York, NY 1974.

6. Burnham, C. D. et al., ''Determination of Lead in Airborne Particulates in Chicago and Cook County, IL, by Atomic Absorption Spectroscopy.'' Envir. Sci. and Tech., 3, 472–475 (1969).

7. ''Proposed Recommended Practices for Atomic Absorption Spectrometry.'' *ASTM Book of Standards,* part 30, pp. 1596–1608 (July 1973).

8. Koirttyohann, S. R. and Wen, J. W., ''Critical Study of the APCD–MIBK Extraction System for Atomic Absorption.'' *Anal. Chem., 45,* 1986–1989 (1973).

9. *Collaborative Study of Reference Method for the Determination of Suspended Particulates in the Atmosphere (High Volume Method).* Obtainable from National Technical Information Service, Department of Commerce, Port Royal Road, Springfield, VA 22151, as PB–205–891.

10. [Reserved]

11. Dubois, L., et al., ''The Metal Content of Urban Air.'' JAPCA, *16,* 77–78 (1966).

12. EPA Report No. 600/4–77–034, June 1977, ''Los Angeles Catalyst Study Symposium.'' Page 223.

13. *Quality Assurance Handbook for Air Pollution Measurement System. Volume 1—Principles.* EPA–600/9–76–005, March 1976.

14. Thompson, R. J. et al., ''Analysis of Selected Elements in Atmospheric Particulate Matter by Atomic Absorption.'' *Atomic Absorption Newsletter, 9,* No. 3, May-June 1970.

15. To be published. EPA, QAB, EMSL, RTP, N.C. 27711

16. *Quality Assurance Handbook for Air Pollution Measurement Systems. Volume II—Ambient Air Specific Methods.* EPA–600/4–77/027a, May 1977.

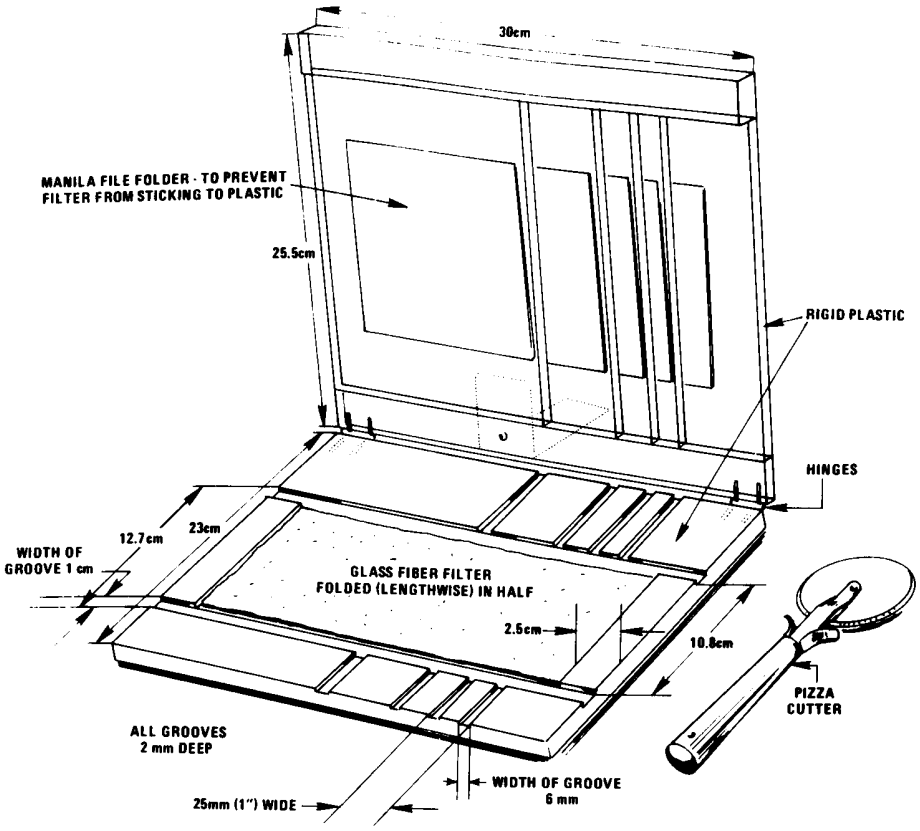

Figure 1

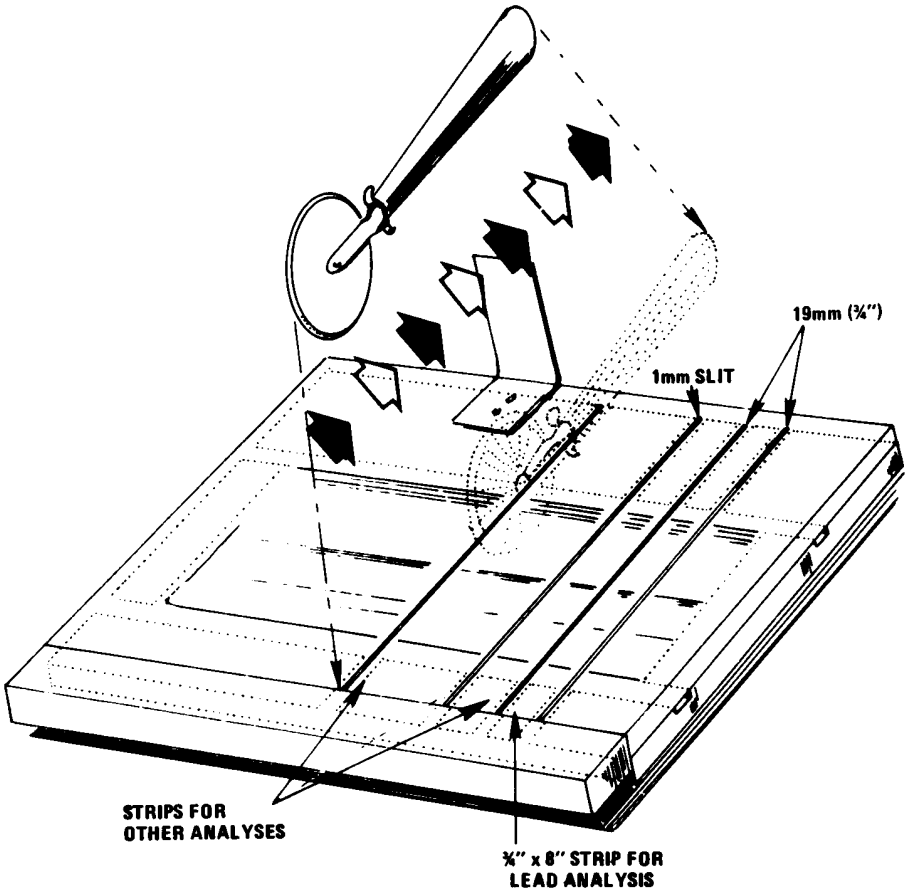

Figure 2

(Secs. 109, 301(a) of the Clean Air Act, as amended (42 U.S.C. 7409, 7601(a)); secs. 110, 301(a) and 319 of the Clean Air Act (42 U.S.C. 7410, 7601(a), 7619))

[43 FR 46258, Oct. 5, 1978; 44 FR 37915, June 29, 1979, as amended at 46 FR 44163, Sept. 3, 1981; 52 FR 24664, July 1, 1987]

APPENDIX H TO PART 50—INTERPRETATION OF THE NATIONAL AMBIENT AIR QUALITY STANDARDS FOR OZONE

1. *General*

This appendix explains how to determine when the expected number of days per calendar year with maximum hourly average concentrations above 0.12 ppm (235 μg/m³) is equal to or less than 1. An expanded discussion of these procedures and associated examples are contained in the ''Guideline for Interpretation of Ozone Air Quality Standards.'' For purposes of clarity in the following discussion, it is convenient to use the term ''exceedance'' to describe a daily maximum hourly average ozone measurement

that is greater than the level of the standard. Therefore, the phrase ''expected number of days with maximum hourly average ozone concentrations above the level of the standard'' may be simply stated as the ''expected number of exceedances.''

The basic principle in making this determination is relatively straightforward. Most of the complications that arise in determining the expected number of annual exceedances relate to accounting for incomplete sampling. In general, the average number of exceedances per calendar year must be less than or equal to 1. In its simplest form, the number of exceedances at a monitoring site would be recorded for each calendar year and then averaged over the past 3 calendar years to determine if this average is less than or equal to 1.

2. *Interpretation of Expected Exceedances*

The ozone standard states that the expected number of exceedances per year must be less than or equal to 1. The statistical term ''expected number'' is basically an arithmetic average. The following example explains what it would mean for an area to be in compliance with this type of standard. Suppose a monitoring station records a valid daily maximum hourly average ozone value for every day of the year during the past 3 years. At the end of each year, the number of days with maximum hourly concentrations above 0.12 ppm is determined and this number is averaged with the results of previous years. As long as this average remains ''less than or equal to 1,'' the area is in compliance.

3. *Estimating the Number of Exceedances for a Year*

In general, a valid daily maximum hourly average value may not be available for each day of the year, and it will be necessary to account for these missing values when estimating the number of exceedances for a particular calendar year. The purpose of these computations is to determine if the expected number of exceedances per year is less than or equal to 1. Thus, if a site has two or more observed exceedances each year, the standard is not met and it is not necessary to use the procedures of this section to account for incomplete sampling.

The term ''missing value'' is used here in the general sense to describe all days that do not have an associated ozone measurement. In some cases, a measurement might actually have been missed but in other cases no measurement may have been scheduled for that day. A daily maximum ozone value is defined to be the highest hourly ozone value recorded for the day. This daily maximum value is considered to be valid if 75 percent of the hours from 9:01 a.m. to 9:00 p.m. (LST) were measured or if the highest hour is greater than the level of the standard.

In some areas, the seasonal pattern of ozone is so pronounced that entire months need not be sampled because it is extremely unlikely that the standard would be exceeded. Any such waiver of the ozone monitoring requirement would be handled under provisions of 40 CFR, Part 58. Some allowance should also be made for days for which valid daily maximum hourly values were not obtained but which would quite likely have been below the standard. Such an allowance introduces a complication in that it becomes necessary to define under what conditions a missing value may be assumed to have been less than the level of the standard. The following criterion may be used for ozone:

A missing daily maximum ozone value may be assumed to be less than the level of the standard if the valid daily maxima on both the preceding day and the following day do not exceed 75 percent of the level of the standard.

Let z denote the number of missing daily maximum values that may be assumed to be less than the standard. Then the following formula shall be used to estimate the expected number of exceedances for the year:

$$e=v+[(v/n)8(N-n-z)] \qquad (1)$$

(*Indicates multiplication.)

where:

e=the estimated number of exceedances for the year,
N=the number of required monitoring days in the year,
n=the number of valid daily maxima,
v=the number of daily values above the level of the standard, and
z=the number of days assumed to be less than the standard level.

This estimated number of exceedances shall be rounded to one decimal place (fractional parts equal to 0.05 round up).

It should be noted that N will be the total number of days in the year unless the appropriate Regional Administrator has granted a waiver under the provisions of 40 CFR part 58.

The above equation may be interpreted intuitively in the following manner. The estimated number of exceedances is equal to the observed number of exceedances (v) plus an increment that accounts for incomplete sampling. There were (N-n) missing values for the year but a certain number of these, namely z, were assumed to be less than the standard. Therefore, (N-n-z) missing values are considered to include possible exceedances. The fraction of measured values that are above the level of the standard is v/n. It is assumed that this same fraction applies to the (N-n-z) missing values and

that (v/n)*(N-n-z) of these values would also have exceeded the level of the standard.

[44 FR 8220, Feb. 8, 1979]

APPENDIX I—[RESERVED]

APPENDIX J TO PART 50—REFERENCE METHOD FOR THE DETERMINATION OF PARTICULATE MATTER AS PM_{10} IN THE ATMOSPHERE

1.0 *Applicability.*

1.1 This method provides for the measurement of the mass concentration of particulate matter with an aerodynamic diameter less than or equal to a nominal 10 micrometers (PM_{1O}) in ambient air over a 24-hour period for purposes of determining attainment and maintenance of the primary and secondary national ambient air quality standards for particulate matter specified in §50.6 of this chapter. The measurement process is nondestructive, and the PM_{10} sample can be subjected to subsequent physical or chemical analyses. Quality assurance procedures and guidance are provided in part 58, appendices A and B, of this chapter and in References 1 and 2.

2.0 *Principle.*

2.1 An air sampler draws ambient air at a constant flow rate into a specially shaped inlet where the suspended particulate matter is inertially separated into one or more size fractions within the PM_{10} size range. Each size fraction in the PM_{1O} size range is then collected on a separate filter over the specified sampling period. The particle size discrimination characteristics (sampling effectiveness and 50 percent cutpoint) of the sampler inlet are prescribed as performance specifications in part 53 of this chapter.

2.2 Each filter is weighed (after moisture equilibration) before and after use to determine the net weight (mass) gain due to collected PM_{10}. The total volume of air sampled, corrected to EPA reference conditions (25 C, 101.3 kPa), is determined from the measured flow rate and the sampling time. The mass concentration of PM_{10} in the ambient air is computed as the total mass of collected particles in the PM_{10} size range divided by the volume of air sampled, and is expressed in micrograms per standard cubic meter (μg/std m^3). For PM_{10} samples collected at temperatures and pressures significantly different from EPA reference conditions, these corrected concentrations sometimes differ substantially from actual concentrations (in micrograms per actual cubic meter), particularly at high elevations. Although not required, the actual PM_{10} concentration can be calculated from the corrected concentration, using the average ambient temperature and barometric pressure during the sampling period.

2.3 A method based on this principle will be considered a reference method only if (a) the associated sampler meets the requirements specified in this appendix and the requirements in part 53 of this chapter, and (b) the method has been designated as a reference method in accordance with part 53 of this chapter.

3.0 *Range.*

3.1 The lower limit of the mass concentration range is determined by the repeatability of filter tare weights, assuming the nominal air sample volume for the sampler. For samplers having an automatic filter-changing mechanism, there may be no upper limit. For samplers that do not have an automatic filter-changing mechanism, the upper limit is determined by the filter mass loading beyond which the sampler no longer maintains the operating flow rate within specified limits due to increased pressure drop across the loaded filter. This upper limit cannot be specified precisely because it is a complex function of the ambient particle size distribution and type, humidity, filter type, and perhaps other factors. Nevertheless, all samplers should be capable of measuring 24-hour PM_{10} mass concentrations of at least 300 μg/std m^3 while maintaining the operating flow rate within the specified limits.

4.0 *Precision.*

4.1 The precision of PM_{10} samplers must be 5 μg/m^3 for PM_{10} concentrations below 80 μg/m^3 and 7 percent for PM_{10} concentrations above 80 μg/m^3, as required by part 53 of this chapter, which prescribes a test procedure that determines the variation in the PM_{10} concentration measurements of identical samplers under typical sampling conditions. Continual assessment of precision via collocated samplers is required by part 58 of this chapter for PM_{10} samplers used in certain monitoring networks.

5.0 *Accuracy.*

5.1 Because the size of the particles making up ambient particulate matter varies over a wide range and the concentration of particles varies with particle size, it is difficult to define the absolute accuracy of PM_{10} samplers. Part 53 of this chapter provides a specification for the sampling effectiveness of PM_{10} samplers. This specification requires that the expected mass concentration calculated for a candidate PM_{10} sampler, when sampling a specified particle size distribution, be within ±10 percent of that calculated for an ideal sampler whose sampling effectiveness is explicitly specified. Also, the particle size for 50 percent sampling effectivensss is required to be 10±0.5 micrometers. Other specifications related to accuracy apply to flow measurement and calibration, filter media, analytical (weighing) procedures, and artifact. The flow rate accuracy of PM_{10} samplers used in certain monitoring networks is required by Part 58

of this chapter to be assessed periodically via flow rate audits.

6.0 *Potential Sources of Error.*

6.1 *Volatile Particles.* Volatile particles collected on filters are often lost during shipment and/or storage of the filters prior to the post-sampling weighing[3]. Although shipment or storage of loaded filters is sometimes unavoidable, filters should be reweighed as soon as practical to minimize these losses.

6.2 *Artifacts.* Positive errors in PM_{10} concentration measurements may result from retention of gaseous species on filters[4,5]. Such errors include the retention of sulfur dioxide and nitric acid. Retention of sulfur dioxide on filters, followed by oxidation to sulfate, is referred to as artifact sulfate formation, a phenomenon which increases with increasing filter alkalinity[6]. Little or no artifact sulfate formation should occur using filters that meet the alkalinity specification in section 7.2.4. Artifact nitrate formation, resulting primarily from retention of nitric acid, occurs to varying degrees on many filter types, including glass fiber, cellulose ester, and many quartz fiber filters[5,7,8,9,10]. Loss of true atmospheric particulate nitrate during or following sampling may also occur due to dissociation or chemical reaction. This phenomenon has been observed on Teflon® filters[8] and inferred for quartz fiber filters[11,12]. The magnitude of nitrate artifact errors in PM_{10} mass concentration measurements will vary with location and ambient temperature; however, for most sampling locations, these errors are expected to be small.

6.3 *Humidity.* The effects of ambient humidity on the sample are unavoidable. The filter equilibration procedure in section 9.0 is designed to minimize the effects of moisture on the filter medium.

6.4 *Filter Handling.* Careful handling of filters between presampling and postsampling weighings is necessary to avoid errors due to damaged filters or loss of collected particles from the filters. Use of a filter cartridge or cassette may reduce the magnitude of these errors. Filters must also meet the integrity specification in section 7.2.3.

6.5 *Flow Rate Variation.* Variations in the sampler's operating flow rate may alter the particle size discrimination characteristics of the sampler inlet. The magnitude of this error will depend on the sensitivity of the inlet to variations in flow rate and on the particle distribution in the atmosphere during the sampling period. The use of a flow control device (section 7.1.3) is required to minimize this error.

6.6 *Air Volume Determination.* Errors in the air volume determination may result from errors in the flow rate and/or sampling time measurements. The flow control device serves to minimize errors in the flow rate determination, and an elapsed time meter (section 7.1.5) is required to minimize the error in the sampling time measurement.

7.0 *Apparatus.*

7.1 *PM_{10} Sampler.*

7.1.1 The sampler shall be designed to:

a. Draw the air sample into the sampler inlet and through the particle collection filter at a uniform face velocity.

b. Hold and seal the filter in a horizontal position so that sample air is drawn downward through the filter.

c. Allow the filter to be installed and removed conveniently.

d. Protect the filter and sampler from precipitation and prevent insects and other debris from being sampled.

e. Minimize air leaks that would cause error in the measurement of the air volume passing through the filter.

f. Discharge exhaust air at a sufficient distance from the sampler inlet to minimize the sampling of exhaust air.

g. Minimize the collection of dust from the supporting surface.

7.1.2 The sampler shall have a sample air inlet system that, when operated within a specified flow rate range, provides particle size discrimination characteristics meeting all of the applicable performance specifications prescribed in part 53 of this chapter. The sampler inlet shall show no significant wind direction dependence. The latter requirement can generally be satisfied by an inlet shape that is circularly symmetrical about a vertical axis.

7.1.3 The sampler shall have a flow control device capable of maintaining the sampler's operating flow rate within the flow rate limits specified for the sampler inlet over normal variations in line voltage and filter pressure drop.

7.1.4 The sampler shall provide a means to measure the total flow rate during the sampling period. A continuous flow recorder is recommended but not required. The flow measurement device shall be accurate to ±2 percent.

7.1.5 A timing/control device capable of starting and stopping the sampler shall be used to obtain a sample collection period of 24 ±1 hr (1,440 ±60 min). An elapsed time meter, accurate to within ±15 minutes, shall be used to measure sampling time. This meter is optional for samplers with continuous flow recorders if the sampling time measurement obtained by means of the recorder meets the ±15 minute accuracy specification.

7.1.6 The sampler shall have an associated operation or instruction manual as required by part 53 of this chapter which includes detailed instructions on the calibration, operation, and maintenance of the sampler.

7.2 *Filters.*

7.2.1 *Filter Medium.* No commercially available filter medium is ideal in all respects for all samplers. The user's goals in

sampling determine the relative importance of various filter characteristics (e.g., cost, ease of handling, physical and chemical characteristics, etc.) and, consequently, determine the choice among acceptable filters. Furthermore, certain types of filters may not be suitable for use with some samplers, particularly under heavy loading conditions (high mass concentrations), because of high or rapid increase in the filter flow resistance that would exceed the capability of the sampler's flow control device. However, samplers equipped with automatic filter-changing mechanisms may allow use of these types of filters. The specifications given below are minimum requirements to ensure acceptability of the filter medium for measurement of PM_{10} mass concentrations. Other filter evaluation criteria should be considered to meet individual sampling and analysis objectives.

7.2.2 *Collection Efficiency*. ≥99 percent, as measured by the DOP test (ASTM–2986) with 0.3 μm particles at the sampler's operating face velocity.

7.2.3 *Integrity*. ±5 μg/m^3 (assuming sampler's nominal 24-hour air sample volume). Integrity is measured as the PM_{10} concentration equivalent corresponding to the average difference between the initial and the final weights of a random sample of test filters that are weighed and handled under actual or simulated sampling conditions, but have no air sample passed through them (i.e., filter blanks). As a minimum, the test procedure must include initial equilibration and weighing, installation on an inoperative sampler, removal from the sampler, and final equilibration and weighing.

7.2.4 *Alkalinity*. <25 microequivalents/gram of filter, as measured by the procedure given in Reference 13 following at least two months storage in a clean environment (free from contamination by acidic gases) at room temperature and humidity.

7.3 *Flow Rate Transfer Standard*. The flow rate transfer standard must be suitable for the sampler's operating flow rate and must be calibrated against a primary flow or volume standard that is traceable to the National Bureau of Standards (NBS). The flow rate transfer standard must be capable of measuring the sampler's operating flow rate with an accuracy of ±2 percent.

7.4 *Filter Conditioning Environment*.

7.4.1 Temperature range: 15 to 30 C.

7.4.2 Temperature control: ±3 C.

7.4.3 Humidity range: 20% to 45% RH.

7.4.4 Humidity control: ±5% RH.

7.5 *Analytical Balance*. The analytical balance must be suitable for weighing the type and size of filters required by the sampler. The range and sensitivity required will depend on the filter tare weights and mass loadings. Typically, an analytical balance with a sensitivity of 0.1 mg is required for high volume samplers (flow rates >0.5 m^3/min). Lower volume samplers (flow rates <0.5 m^3/min) will require a more sensitive balance.

8.0 *Calibration*.

8.1 *General Requirements*.

8.1.1 Calibration of the sampler's flow measurement device is required to establish traceability of subsequent flow measurements to a primary standard. A flow rate transfer standard calibrated against a primary flow or volume standard shall be used to calibrate or verify the accuracy of the sampler's flow measurement device.

8.1.2 Particle size discrimination by inertial separation requires that specific air velocities be maintained in the sampler's air inlet system. Therefore, the flow rate through the sampler's inlet must be maintained throughout the sampling period within the design flow rate range specified by the manufacturer. Design flow rates are specified as actual volumetric flow rates, measured at existing conditions of temperature and pressure (Q_a). In contrast, mass concentrations of PM_{10} are computed using flow rates corrected to EPA reference conditions of temperature and pressure (Q_{std}).

8.2 *Flow Rate Calibration Procedure*.

8.2.1 PM_{10} samplers employ various types of flow control and flow measurement devices. The specific procedure used for flow rate calibration or verification will vary depending on the type of flow controller and flow indicator employed. Calibration in terms of actual volumetric flow rates (Q_a) is generally recommended, but other measures of flow rate (e.g., Q_{std}) may be used provided the requirements of section 8.1 are met. The general procedure given here is based on actual volumetric flow units (Q_a) and serves to illustrate the steps involved in the calibration of a PM_{10} sampler. Consult the sampler manufacturer's instruction manual and Reference 2 for specific guidance on calibration. Reference 14 provides additional information on the use of the commonly used measures of flow rate and their interrelationships.

8.2.2 Calibrate the flow rate transfer standard against a primary flow or volume standard traceable to NBS. Establish a calibration relationship (e.g., an equation or family of curves) such that traceability to the primary standard is accurate to within 2 percent over the expected range of ambient conditions (i.e., temperatures and pressures) under which the transfer standard will be used. Recalibrate the transfer standard periodically.

8.2.3 Following the sampler manufacturer's instruction manual, remove the sampler inlet and connect the flow rate transfer standard to the sampler such that the transfer standard accurately measures the sampler's flow rate. Make sure there are no leaks between the transfer standard and the sampler.

8.2.4 Choose a minimum of three flow rates (actual m^3/min), spaced over the acceptable flow rate range specified for the inlet (see 7.1.2) that can be obtained by suitable adjustment of the sampler flow rate. In accordance with the sampler manufacturer's instruction manual, obtain or verify the calibration relationship between the flow rate (actual m^3/min) as indicated by the transfer standard and the sampler's flow indicator response. Record the ambient temperature and barometric pressure. Temperature and pressure corrections to subsequent flow indicator readings may be required for certain types of flow measurement devices. When such corrections are necessary, correction on an individual or daily basis is preferable. However, seasonal average temperature and average barometric pressure for the sampling site may be incorporated into the sampler calibration to avoid daily corrections. Consult the sampler manufacturer's instruction manual and Reference 2 for additional guidance.

8.2.5 Following calibration, verify that the sampler is operating at its design flow rate (actual m^3/min) with a clean filter in place.

8.2.6 Replace the sampler inlet.

9.0 *Procedure.*

9.1 The sampler shall be operated in accordance with the specific guidance provided in the sampler manufacturer's instruction manual and in Reference 2. The general procedure given here assumes that the sampler's flow rate calibration is based on flow rates at ambient conditions (Q_a) and serves to illustrate the steps involved in the operation of a PM_{10} sampler.

9.2 Inspect each filter for pinholes, particles, and other imperfections. Establish a filter information record and assign an identification number to each filter.

9.3 Equilibrate each filter in the conditioning environment (see 7.4) for at least 24 hours.

9.4 Following equilibration, weigh each filter and record the presampling weight with the filter identification number.

9.5 Install a preweighed filter in the sampler following the instructions provided in the sampler manufacturer's instruction manual.

9.6 Turn on the sampler and allow it to establish run-temperature conditions. Record the flow indicator reading and, if needed, the ambient temperature and barometric pressure. Determine the sampler flow rate (actual m^3/min) in accordance with the instructions provided in the sampler manufacturer's instruction manual. NOTE.—No onsite temperature or pressure measurements are necessary if the sampler's flow indicator does not require temperature or pressure corrections or if seasonal average temperature and average barometric pressure for the sampling site are incorporated into the sampler calibration (see step 8.2.4). If individual or daily temperature and pressure corrections are required, ambient temperature and barometric pressure can be obtained by on-site measurements or from a nearby weather station. Barometric pressure readings obtained from airports must be station pressure, not corrected to sea level, and may need to be corrected for differences in elevation between the sampling site and the airport.

9.7 If the flow rate is outside the acceptable range specified by the manufacturer, check for leaks, and if necessary, adjust the flow rate to the specified setpoint. Stop the sampler.

9.8 Set the timer to start and stop the sampler at appropriate times. Set the elapsed time meter to zero or record the initial meter reading.

9.9 Record the sample information (site location or identification number, sample date, filter identification number, and sampler model and serial number).

9.10 Sample for 24±1 hours.

9.11 Determine and record the average flow rate ($\bar{Q}_a$) in actual m^3/min for the sampling period in accordance with the instructions provided in the sampler manufacturer's instruction manual. Record the elapsed time meter final reading and, if needed, the average ambient temperature and barometric pressure for the sampling period (see note following step 9.6).

9.12 Carefully remove the filter from the sampler, following the sampler manufacturer's instruction manual. Touch only the outer edges of the filter.

9.13 Place the filter in a protective holder or container (e.g., petri dish, glassine envelope, or manila folder).

9.14 Record any factors such as meteorological conditions, construction activity, fires or dust storms, etc., that might be pertinent to the measurement on the filter information record.

9.15 Transport the exposed sample filter to the filter conditioning environment as soon as possible for equilibration and subsequent weighing.

9.16 Equilibrate the exposed filter in the conditioning environment for at least 24 hours under the same temperature and humidity conditions used for presampling filter equilibration (see 9.3).

9.17 Immediately after equilibration, reweigh the filter and record the postsampling weight with the filter identification number.

10.0 *Sampler Maintenance.*

10.1 The PM_{10} sampler shall be maintained in strict accordance with the maintenance procedures specified in the sampler manufacturer's instruction manual.

11.0 *Calculations.*

11.1 Calculate the average flow rate over the sampling period corrected to EPA reference conditions as $\bar{Q}_{std}$. When the sampler's

flow indicator is calibrated in actual volumetric units (Q_a), $\bar{Q}_{std}$ is calculated as:

$$\bar{Q}_{std}=\bar{Q}_a\times(P_{av}/T_{av})(T_{std}/P_{std})$$

where

$\bar{Q}_{std}$=average flow rate at EPA reference conditions, std m^3/min;
$\bar{Q}_a$=average flow rate at ambient conditions, m^3/min;
P_{av}=average barometric pressure during the sampling period or average barometric pressure for the sampling site, kPa (or mm Hg);
T_{av}=average ambient temperature during the sampling period or seasonal average ambient temperature for the sampling site, K;
T_{std}=standard temperature, defined as 298 K;
P_{std}=standard pressure, defined as 101.3 kPa (or 760 mm Hg).

11.2 Calculate the total volume of air sampled as:

$$V_{std}=\bar{Q}_{std}\times t$$

where

V_{std}=total air sampled in standard volume units, std m^3;
t=sampling time, min.

11.3 Calculate the PM_{10} concentration as:

$$PM_{10}=(W_f-W_i)\times10^6/V_{std}$$

where

PM_{10}=mass concentration of PM_{10}, µg/std m^3;
W_f, W_i=final and initial weights of filter collecting PM_{1O} particles, g;
10^6=conversion of g to µg.

NOTE: If more than one size fraction in the PM_{10} size range is collected by the sampler, the sum of the net weight gain by each collection filter [$\Sigma(W_f-W_i)$] is used to calculate the PM_{10} mass concentration.

12.0 *References.*

1. Quality Assurance Handbook for Air Pollution Measurement Systems, Volume I, Principles. EPA–600/9–76–005, March 1976. Available from CERI, ORD Publications, U.S. Environmental Protection Agency, 26 West St. Clair Street, Cincinnati, OH 45268.

2. Quality Assurance Handbook for Air Pollution Measurement Systems, Volume II, Ambient Air Specific Methods. EPA–600/4–77–027a, May 1977. Available from CERI, ORD Publications, U.S. Environmental Protection Agency, 26 West St. Clair Street, Cincinnati, OH 45268.

3. Clement, R.E., and F.W. Karasek. Sample Composition Changes in Sampling and Analysis of Organic Compounds in Aerosols. Int. J. Environ. Analyt. Chem., 7:109, 1979.

4. Lee, R.E., Jr., and J. Wagman. A Sampling Anomaly in the Determination of Atmospheric Sulfate Concentration. Amer. Ind. Hyg. Assoc. J., 27:266, 1966.

5. Appel, B.R., S.M. Wall, Y. Tokiwa, and M. Haik. Interference Effects in Sampling Particulate Nitrate in Ambient Air. Atmos. Environ., 13:319, 1979.

6. Coutant, R.W. Effect of Environmental Variables on Collection of Atmospheric Sulfate. Environ. Sci. Technol., 11:873, 1977.

7. Spicer, C.W., and P. Schumacher. Interference in Sampling Atmospheric Particulate Nitrate. Atmos. Environ., 11:873, 1977.

8. Appel, B.R., Y. Tokiwa, and M. Haik. Sampling of Nitrates in Ambient Air. Atmos. Environ., 15:283, 1981.

9. Spicer, C.W., and P.M. Schumacher. Particulate Nitrate: Laboratory and Field Studies of Major Sampling Interferences. Atmos. Environ., 13:543, 1979.

10. Appel, B.R. Letter to Larry Purdue, U.S. EPA, Environmental Monitoring and Support Laboratory. March 18, 1982, Docket No. A–82–37, II–I–1.

11. Pierson, W.R., W.W. Brachaczek, T.J. Korniski, T.J. Truex, and J.W. Butler. Artifact Formation of Sulfate, Nitrate, and Hydrogen Ion on Backup Filters: Allegheny Mountain Experiment. J. Air Pollut. Control Assoc., 30:30, 1980.

12. Dunwoody, C.L. Rapid Nitrate Loss From PM_{10} Filters. J. Air Pollut. Control Assoc., 36:817, 1986.

13. Harrell, R.M. Measuring the Alkalinity of Hi-Vol Air Filters. EMSL/RTP–SOP–QAD–534, October 1985. Available from the U.S. Environmental Protection Agency, EMSL/QAD, Research Triangle Park, NC 27711.

14. Smith, F., P.S. Wohlschlegel, R.S.C. Rogers, and D.J. Mulligan. Investigation of Flow Rate Calibration Procedures Associated With the High Volume Method for Determination of Suspended Particulates. EPA–600/4–78–047, U.S. Environmental Protection Agency, Research Triangle Park, NC 27711, 1978.

[52 FR 24664, July 1, 1987; 52 FR 29467, Aug. 7, 1987]

APPENDIX K TO PART 50—INTERPRETATION OF THE NATIONAL AMBIENT AIR QUALITY STANDARDS FOR PARTICULATE MATTER

1.0 *General.*

This appendix explains the computations necessary for analyzing particulate matter data to determine attainment of the 24-hour and annual standards specified in 40 CFR 50.6. For the primary and secondary standards, particulate matter is measured in the ambient air as PM_{10} (particles with an aerodynamic diameter less than or equal to a nominal 10 micrometers) by a reference method based on appendix J of this part and designated in accordance with part 53 of this chapter, or by an equivalent method designated in accordance with part 53 of this

chapter. The required frequency of measurements is specified in part 58 of this chapter.

Several terms used throughout this appendix must be defined. A ''daily value'' for PM_{10} refers to the 24-hour average concentration of PM_{10} calculated or measured from midnight to midnight (local time). The term ''exceedance'' means a daily value that is above the level of the 24-hour standard after rounding to the nearest 10 μg/m³ (i.e., values ending in 5 or greater are to be rounded up). The term ''average'' refers to an arithmetic mean. All particulate matter standards are expressed in terms of expected annual values: expected number of exceedances per year for the 24-hour standards and expected annual arithmetic mean for the annual standards. The ''expected annual value'' is the number approached when the annual values from an increasing number of years are averaged, in the absence of long-term trends in emissions or meteorological conditions. The term ''year'' refers to a calendar year.

Although the discussion in this appendix focuses on monitored data, the same principles apply to modeling data, subject to EPA modeling guidelines.

2.0 *Attainment Determinations.*

2.1 *24-Hour Primary and Secondary Standards.*

Under 40 CFR 50.6(a) the 24-hour primary and secondary standards are attained when the expected number of exceedances per year at each monitoring site is less than or equal to one. In the simplest case, the number of expected exceedances at a site is determined by recording the number of exceedances in each calendar year and then averaging them over the past 3 calendar years. Situations in which 3 years of data are not available and possible adjustments for unusual events or trends are discussed in Sections 2.3 and 2.4. Further, when data for a year are incomplete, it is necessary to compute an estimated number of exceedances for that year by adjusting the observed number of exceedances. This procedure, performed by calendar quarter, is described in Section 3. The expected number of exceedances is then estimated by averaging the individual annual estimates for the past 3 years.

The comparison with the allowable expected exceedance rate of one per year is made in terms of a number rounded to the nearest tenth (fractional values equal to or greater than 0.05 are to be rounded up; e.g., an exceedance rate of 1.05 would be rounded to 1.1, which is the lowest rate for nonattainment).

2.2 *Annual Primary and Secondary Standards.*

Under 40 CFR 50.6(b), the annual primary and secondary standards are attained when the expected annual arithmetic mean PM_{10} concentration is less than or equal to the level of the standard. In the simplest case, the expected annual arithmetic mean is determined by averaging the annual arithmetic mean PM_{10} concentrations for the past 3 calendar years. Because of the potential for incomplete data and the possible seasonality in PM_{10} concentrations, the annual mean shall be calculated by averaging the four quarterly means of PM_{10} concentrations within the calendar year. The formulas for calculating the annual arithmetic mean are given in Section 4. Situations in which 3 years of data are not available and possible adjustments for unusual events or trends are discussed in Sections 2.3 and 2.4. The expected annual arithmetic mean is rounded to the nearest 1 μg/m³ before comparison with the annual standards (fractional values equal to or greater than 0.5 are to be rounded up).

2.3 *Data Requirements.*

40 CFR 58.13 specifies the required minimum frequency of sampling for PM_{10}. For the purposes of making comparisons with the particulate matter standards, all data produced by National Air Monitoring Stations (NAMS), State and Local Air Monitoring Stations (SLAMS) and other sites submitted to EPA in accordance with the Part 58 requirements must be used, and a minimum of 75 percent of the scheduled PM_{10} samples per quarter are required.

To demonstrate attainment of either the annual or 24-hour standards at a monitoring site, the monitor must provide sufficient data to perform the required calculations of Sections 3 and 4. The amount of data required varies with the sampling frequency, data capture rate and the number of years of record. In all cases, 3 years of representative monitoring data that meet the 75 percent criterion of the previous paragraph should he utilized, if available, and would suffice. More than 3 years may be considered, if all additional representative years of data meeting the 75 percent criterion are utilized. Data not meeting these criteria may also suffice to show attainment; however, such exceptions will have to be approved by the appropriate Regional Administrator in accordance with EPA guidance.

There are less stringent data requirements for showing that a monitor has failed an attainment test and thus has recorded a violation of the particulate matter standards. Although it is generally necessary to meet the minimum 75 percent data capture requirement per quarter to use the computational formulas described in Sections 3 and 4, this criterion does not apply when less data is sufficient to unambiguously establish nonattainment. The following examples illustrate how nonattainment can be demonstrated when a site fails to meet the completeness criteria. Nonattainment of the 24-hour primary standards can be established by (a) the observed annual number of exceedances (e.g. four observed exceedances in a single year), or by (b) the estimated

number of exceedances derived from the observed number of exceedances and the required number of scheduled samples (e.g. two observed exceedances with every other day sampling). Nonattainment of the annual standards can be demonstrated on the basis of quarterly mean concentrations developed from observed data combined with one-half the minimum detectable concentration substituted for missing values. In both cases, expected annual values must exceed the levels allowed by the standards.

2.4 *Adjustment for Exceptional Events and Trends.*

An exceptional event is an uncontrollable event caused by natural sources of particulate matter or an event that is not expected to recur at a given location. Inclusion of such a value in the computation of exceedances or averages could result in inappropriate estimates of their respective expected annual values. To reduce the effect of unusual events, more than 3 years of representative data may be used. Alternatively, other techniques, such as the use of statistical models or the use of historical data could be considered so that the event may be discounted or weighted according to the likelihood that it will recur. The use of such techniques is subject to the approval of the appropriate Regional Administrator in accordance with EPA guidance.

In cases where long–term trends in emissions and air quality are evident, mathematical techniques should be applied to account for the trends to ensure that the expected annual values are not inappropriately biased by unrepresentative data. In the simplest case, if 3 years of data are available under stable emission conditions, this data should be used. In the event of a trend or shift in emission patterns, either the most recent representative year(s) could be used or statistical techniques or models could be used in conjunction with previous years of data to adjust for trends. The use of less than 3 years of data, and any adjustments are subject to the approval of the appropriate Regional Administrator in accordance with EPA guidance.

3.0 *Computational formulas for the 24-hour standards.*

3.1 *Estimating Exceedances for a year.*

If PM_{10} sampling is scheduled less frequently than every day, or if some scheduled samples are missed, a PM_{10} value will not be available for each day of the year. To account for the possible effect of incomplete data, an adjustment must be made to the data collected at each monitoring location to estimate the number of exceedances in a calendar year. In this adjustment, the assumption is made that the fraction of missing values that would have exceeded the standard level is identical to the fraction of measured values above this level. This computation is to be made for all sites that are scheduled to monitor throughout the entire year and meet the minimum data requirements of Section 2.3. Because of possible seasonal imbalance, this adjustment shall be applied on a quarterly basis. The estimate of the expected number of exceedances for the quarter is equal to the observed number of exceedances plus an increment associated with the missing data. The following formula must be used for these computations:

$$e_q = v_q + [(v_q/n_q) \times (N_q - n_q)] = v_q \times N_q/n_q \qquad [1]$$

where

e_q=the estimated number of exceedances for calendar quarter q,

v_q=the observed number of exceedances for calendar quarter q,

N_q=the number of days in calendar quarter q,

n_q=the number of days in calendar quarter q with PM_{10} data, and

q=the index for calendar quarter, q=1, 2, 3 or 4.

The estimated number of exceedances for a calendar quarter must be rounded to the nearest hundredth (fractional values equal to or greater than 0.005 must be rounded up).

The estimated number of exceedances for the year, e, is the sum of the estimates for each calendar quarter.

$$e = \sum_{q=1}^{4} e_q \qquad [2]$$

The estimated number of exceedances for a single year must be rounded to one decimal place (fractional values equal to or greater than 0.05 are to be rounded up). The expected number of exceedances is then estimated by averaging the individual annual estimates for the most recent 3 or more representative years of data. The expected number of exceedances must be rounded to one decimal place (fractional values equal to or greater than 0.05 are to be rounded up).

The adjustment for incomplete data will not be necessary for monitoring or modeling data which constitutes a complete record, i.e., 365 days per year.

To reduce the potential for overestimating the number of expected exceedances, the correction for missing data will not be required for a calendar quarter in which the first observed exceedance has occurred if: (a) there was only one exceedance in the calendar quarter, (b) everyday sampling is subsequently initiated and maintained for 4 calendar quarters in accordance with 40 CFR 58.13 and (c) data capture of 75 percent is achieved during the required period of everyday sampling. In addition, if the first exceedance is observed in a calendar quarter in which the monitor is already sampling

every day, no adjustment for missing data will be made to the first exceedance if a 75 percent data capture rate was achieved in the quarter in which it was observed.

Example 1

During a particular calendar quarter, 39 out of a possible 92 samples were recorded, with one observed exceedance of the 24-hour standard. Using formula [1], the estimated number of exceedances for the quarter is

$e_q=1\times92/39=2.359$ or 2.36

If the estimated exceedances for the other 3 calendar quarters in the year were 2.30, 0.0 and 0.0, then, using formula [2], the estimated number of exceedances for the year is 2.36+2.30+0.0+0.0 which equals 4.66 or 4.7. If no exceedances were observed for the 2 previous years, then the expected number of exceedances is estimated by:

$$(1/3)\times(4.7+0+0)=1.57$$

or 1.6. Since 1.6 exceeds the allowable number of expected exceedances, this monitoring site would fail the attainment test.

Example 2

In this example, everyday sampling was initiated following the first observed exceedance as required by 40 CFR 58.13. Accordingly, the first observed exceedance would not be adjusted for incomplete sampling. During the next three quarters, 1.2 exceedances were estimated. In this case, the estimated exceedances for the year would be 1.0+1.2+0.0+0.0 which equals 2.2. If, as before, no exceedances were observed for the two previous years, then the estimated exceedances for the 3–year period would then be (1/3)×(2.2+0.0+0.0)=0.7, and the monitoring site would *not* fail the attainment test.

3.2 *Adjustments for Non-Scheduled Sampling Days.*

If a systematic sampling schedule is used and sampling is performed on days in addition to the days specified by the systematic sampling schedule, e.g., during episodes of high pollution, then an adjustment must be made in the formula for the estimation of exceedances. Such an adjustment is needed to eliminate the bias in the estimate of the quarterly and annual number of exceedances that would occur if the chance of an exceedance is different for scheduled than for non-scheduled days, as would be the case with episode sampling.

The required adjustment treats the systematic sampling schedule as a stratified sampling plan. If the period from one scheduled sample until the day preceding the next scheduled sample is defined as a sampling stratum, then there is one stratum for each scheduled sampling day. An average number of observed exceedances is computed for each of these sampling strata. With nonscheduled sampling days, the estimated number of exceedances is defined as

$$e_q = (N_q/m_q) \times \sum_{j=1}^{m_q} (v_j/k_j) \qquad [3]$$

where

e_q=the estimated number of exceedances for the quarter.

N_q=the number of days in the quarter,

m_q=the number of strata with samples during the quarter,

v_j=the number of observed exceedances in stratum j, and

k_j=the number of actual samples in stratum j.

Note that if only one sample value is recorded in each stratum, then formula [3] reduces to formula [1].

Example 3

A monitoring site samples according to a systematic sampling schedule of one sample every 6 days, for a total of 15 scheduled samples in a quarter out of a total of 92 possible samples. During one 6-day period, potential episode levels of PM_{10} were suspected, so 5 additional samples were taken. One of the regular scheduled samples was missed, so a total of 19 samples in 14 sampling strata were measured. The one 6-day sampling stratum with 6 samples recorded 2 exceedances. The remainder of the quarter with one sample per stratum recorded zero exceedances. Using formula [3], the estimated number of exceedances for the quarter is

$e_q=(92/14)\times(2/6+0+\ldots+0)=2.19$

4.0 Computational Formulas for Annual Standards.

4.1 Calculation of the Annual Arithmetic Mean.

An annual arithmetic mean value for PM_{10} is determined by averaging the quarterly means for the 4 calendar quarters of the year. The following formula is to be used for calculation of the mean for a calendar quarter:

$$\bar{x}_q = (1/n_q) \times \sum_{i=1}^{n_q} x_i \qquad [4]$$

where

$\bar{x}_q$= the quarterly mean concentration for quarter q, q=1, 2, 3, or 4,

n_q= the number of samples in the quarter, and

x_i= the ith concentration value recorded in the quarter.

The quarterly mean, expressed in μg/m³, must be rounded to the nearest tenth (fractional values of 0.05 should be rounded up).

The annual mean is calculated by using the following formula:

$$\bar{x} = (1/4) \times \sum_{q=1}^{4} \bar{x}_q \qquad [5]$$

where

$\bar{x}$=the annual mean, and

$\bar{x}_q$=the mean for calendar quarter q.

The average of quarterly means must be rounded to the nearest tenth (fractional values of 0.05 should be rounded up).

The use of quarterly averages to compute the annual average will not be necessary for monitoring or modeling data which results in a complete record, i.e., 365 days per year.

The expected annual mean is estimated as the average of three or more annual means. This multi-year estimate, expressed in μg/m³, shall be rounded to the nearest integer for comparison with the annual standard (fractional values of 0.5 should be rounded up).

Example 4

Using formula [4], the quarterly means are calculated for each calendar quarter. If the quarterly means are 52.4, 75.3, 82.1, and 63.2 μg/m³, then the annual mean is

$\bar{x}$ = (1/4)×(52.4+75.3+82.1+63.2)
= 68.25 or 68.3

4.2 Adjustments for Non-scheduled Sampling Days.

An adjustment in the calculation of the annual mean is needed if sampling is performed on days in addition to the days specified by the systematic sampling schedule. For the same reasons given in the discussion of estimated exceedances (Section 3.2), the quarterly averages would be calculated by using the following formula:

$$\bar{x}_q = (1/m_q) \times \sum_{j=1}^{m_q} \sum_{i=1}^{k_j} (x_{ij}/k_j) \qquad [6]$$

where

$\bar{x}_q$=the quarterly mean concentration for quarter q, q=1, 2, 3, or 4,

x_{ij}=the ith concentration value recorded in stratum j,

k_j=the number of actual samples in stratum j, and

m_q=the number of strata with data in the quarter.

If one sample value is recorded in each stratum, formula [6] reduces to a simple arithmetic average of the observed values as described by formula [4].

Example 5

During one calendar quarter, 9 observations were recorded. These samples were distributed among 7 sampling strata, with 3 observations in one stratum. The concentrations of the 3 observations in the single stratum were 202, 242, and 180 μg/m³. The remaining 6 observed concentrations were 55, 68, 73, 92, 120, and 155 μg/m³. Applying the weighting factors specified in formula [6], the quarterly mean is

$\bar{x}_q$ = (1/7)×[(1/3)×(202+242+180)+
55+68+73+92+120+155]
= 110.1

Although 24–hour measurements are rounded to the nearest 10 μg/m³ for determinations of exceedances of the 24–hour standard, note that these values are rounded to the nearest 1 μg/m³ for the calculation of means.

[52 FR 24667, July 1, 1987; 52 FR 26402, July 14, 1987; 52 FR 29382, Aug. 7, 1987; 52 FR 31701, Aug. 21, 1987]

PART 51—REQUIREMENTS FOR PREPARATION, ADOPTION, AND SUBMITTAL OF IMPLEMENTATION PLANS

Subparts A–E—[Reserved]

Subpart F—Procedural Requirements

Sec.

51.100 Definitions.
51.101 Stipulations.
51.102 Public hearings.
51.103 Submission of plans; preliminary review of plans.
51.104 Revisions.
51.105 Approval of plans.

Subpart G—Control Strategy

51.110 Attainment and maintenance of national standards.
51.111 Description of control measures.
51.112 Demonstration of adequacy.
51.113 [Reserved]
51.114 Emissions data and projections.
51.115 Air quality data and projections.
51.116 Data availability.
51.117 Additional provisions for lead.
51.118 Stack height provisions.
51.119 Intermittent control systems.
51.120 Requirements for State implementation plan revisions relating to new motor vehicles.

Subpart H—Prevention of Air Pollution Emergency Episodes

51.150 Classification of regions for episode plans.
51.151 Significant harm levels.
51.152 Contingency plans.
51.153 Reevaluation of episode plans.

Subpart I—Review of New Sources and Modifications

51.160 Legally enforceable procedures.
51.161 Public availability of information.
51.162 Identification of responsible agency.
51.163 Administration procedures.
51.164 Stack height procedures.
51.165 Permit requirements.
51.166 Prevention of significant deterioration of air quality.

Subpart J—Ambient Air Quality Surveillance

51.190 Ambient air quality monitoring requirements.

Subpart K—Source Survelliance

51.210 General.
51.211 Emission reports and recordkeeping.
51.212 Testing, inspection, enforcement, and complaints.
51.213 Transportation control measures.
51.214 Continuous emission monitoring.

Subpart L—Legal Authority

51.230 Requirements for all plans.
51.231 Identification of legal authority.
51.232 Assignment of legal authority to local agencies.

Subpart M—Intergovernmental Consultation

AGENCY DESIGNATION

51.240 General plan requirements.
51.241 Nonattainment areas for carbon monoxide and ozone.
51.242 [Reserved]

Subpart N—Compliance Schedules

51.260 Legally enforceable compliance schedules.
51.261 Final compliance schedules.
51.262 Extension beyond one year.

Subpart O—Miscellaneous Plan Content Requirements

51.280 Resources.
51.281 Copies of rules and regulations.
51.285 Public notification.

Subpart P—Protection of Visibility

51.300 Purpose and applicability.
51.301 Definitions.
51.302 Implementation control strategies.
51.303 Exemptions from control.
51.304 Identification of integral vistas.
51.305 Monitoring.
51.306 Long-term strategy.
51.307 New source review.

Subpart Q—Reports

AIR QUALITY DATA REPORTING

51.320 Annual air quality data report.

SOURCE EMISSIONS AND STATE ACTION REPORTING

51.321 Annual source emissions and State action report.
51.322 Sources subject to emissions reporting.
51.323 Reportable emissions data and information.
51.324 Progress in plan enforcement.
51.326 Reportable revisions.
51.327 Enforcement orders and other State actions.
51.328 [Reserved]

Subpart R—Extensions

51.341 Request for 18-month extension.

Subpart S—Inspection/Maintenance Program Requirements

51.350 Applicability.
51.351 Enhanced I/M performance standard.
51.352 Basic I/M performance standard.
51.353 Network type and program evaluation.
51.354 Adequate tools and resources.
51.355 Test frequency and convenience.
51.356 Vehicle coverage.
51.357 Test procedures and standards.
51.358 Test equipment.
51.359 Quality control.
51.360 Waivers and compliance via diagnostic inspection.
51.361 Motorist compliance enforcement.
51.362 Motorist compliance enforcement program oversight.
51.363 Quality assurance.
51.364 Enforcement against contractors, stations and inspectors.
51.365 Data collection.
51.366 Data analysis and reporting.
51.367 Inspector training and licensing or certification.
51.368 Public information and consumer protection.
51.369 Improving repair effectiveness.
51.370 Compliance with recall notices.
51.371 On-road testing.

51.372 State implementation plan submissions.
51.373 Implementation deadlines.

APPENDICES TO SUBPART S OF PART 51

APPENDIX A TO SUBPART S—CALIBRATIONS, ADJUSTMENTS AND QUALITY CONTROL
APPENDIX B TO SUBPART S—TEST PROCEDURES
APPENDIX C TO SUBPART S—STEADY-STATE SHORT TEST STANDARDS
APPENDIX D TO SUBPART S—STEADY-STATE SHORT TEST EQUIPMENT
APPENDIX E TO SUBPART S—TRANSIENT TEST DRIVING CYCLE

Subpart T—Conformity to State or Federal Implementation Plans of Transportation Plans, Programs, and Projects Developed, Funded or Approved Under Title 23 U.S.C. or the Federal Transit Act

51.390 Purpose.
51.392 Definitions.
51.394 Applicability.
51.396 Implementation plan revision.
51.398 Priority.
51.400 Frequency of conformity determinations.
51.402 Consultation.
51.404 Content of transportation plans.
51.406 Relationship of transportation plan and TIP conformity with the NEPA process.
51.408 Fiscal constraints for transportation plans and TIPs.
51.410 Criteria and procedures for determining conformity of transportation plans, programs, and projects: General.
51.412 Criteria and procedures: Latest planning assumptions.
51.414 Criteria and procedures: Latest emissions model.
51.416 Criteria and procedures: Consultation.
51.418 Criteria and procedures: Timely implementation of TCMs.
51.420 Criteria and procedures: Currently conforming transportation plan and TIP.
51.422 Criteria and procedures: Projects from a plan and TIP.
51.424 Criteria and procedures: Localized CO and PM_{10} violations (hot spots).
51.426 Criteria and procedures: Compliance with PM_{10} control measures.
51.428 Criteria and procedures: Motor vehicle emissions budget (transportation plan).
51.430 Criteria and procedures: Motor vehicle emissions budget (TIP).
51.432 Criteria and procedures: Motor vehicle emissions budget (project not from a plan and TIP).
51.434 Criteria and procedures: Localized CO violations (hot spots) in the interim period.
51.436 Criteria and procedures: Interim period reductions in ozone and CO areas (transportation plan).
51.438 Criteria and procedures: Interim period reductions in ozone and CO areas (TIP).
51.440 Criteria and procedures: Interim period reductions for ozone and CO areas (project not from a plan and TIP).
51.442 Criteria and procedures: Interim period reductions for PM_{10} and NO_2 areas (transportation plan).
51.444 Criteria and procedures: Interim period reductions for PM_{10} and NO_2 areas (TIP).
51.446 Criteria and procedures: Interim period reductions for PM_{10} and NO_2 areas (project not from a plan and TIP).
51.448 Transition from the interim period to the control strategy period.
51.450 Requirements for adoption or approval of projects by other recipients of funds designated under title 23 U.S.C. or the Federal Transit Act.
51.452 Procedures for determining regional transportation-related emissions.
51.454 Procedures for determining localized CO and PM_{10} concentrations (hot-spot analysis).
51.456 Using the motor vehicle emissions budget in the applicable implementation plan (or implementation plan submission).
51.458 Enforceability of design concept and scope and project-level mitigation and control measures.
51.460 Exempt projects.
51.462 Projects exempt from regional emissions analyses.
51.464 Special provisions for nonattainment areas which are not required to demonstrate reasonable further progress and attainment.

Subpart U—Economic Incentive Programs

51.490 Applicability.
51.491 Definitions.
51.492 State program election and submittal.
51.493 State program requirements.
51.494 Use of program revenues.

Subpart W—Determining Conformity of General Federal Actions to State or Federal Implementation Plans

Sec.
51.850 Prohibition.
51.851 State implementation plan (SIP) revision.
51.852 Definitions.
51.853 Applicability.
51.854 Conformity analysis.
51.855 Reporting requirements.
51.856 Public participation.
51.857 Frequency of conformity determinations.

51.858 Criteria for determining conformity of general Federal actions.
51.859 Procedures for conformity determinations of general Federal actions.
51.860 Mitigation of air quality impacts.
APPENDICES A–K—[RESERVED]
APPENDIX L TO PART 51—EXAMPLE REGULATIONS FOR PREVENTION OF AIR POLLUTION EMERGENCY EPISODES
APPENDIX M TO PART 51—RECOMMENDED TEST METHODS FOR STATE IMPLEMENTATION PLANS
APPENDICES N–O—[RESERVED]
APPENDIX P TO PART 51—MINIMUM EMISSION MONITORING REQUIREMENTS
APPENDICES Q–R—[RESERVED]
APPENDIX S TO PART 51—EMISSION OFFSET INTERPRETATIVE RULING
APPENDIX T–U—[RESERVED]
APPENDIX V TO PART 51—CRITERIA FOR DETERMINING THE COMPLETENESS OF PLAN SUBMISSIONS
APPENDIX W TO PART 51—GUIDELINE ON AIR QUALITY MODELS [REVISED]
APPENDIX X TO PART 51—EXAMPLES OF ECONOMIC INCENTIVE PROGRAMS

AUTHORITY: 42 U.S.C. 7401–7671q.

SOURCE: 36 FR 22398, Nov. 25, 1971, unless otherwise noted.

Subparts A–E—[Reserved]

Subpart F—Procedural Requirements

SOURCE: 51 FR 40661, Nov. 7, 1986, unless otherwise noted.

§ 51.100 Definitions.

As used in this part, all terms not defined herein will have the meaning given them in the Act:

(a) *Act* means the Clean Air Act (42 U.S.C. 7401 *et seq.*, as amended by Pub. L. 91–604, 84 Stat. 1676 Pub. L. 95–95, 91 Stat., 685 and Pub. L. 95–190, 91 Stat., 1399.)

(b) *Administrator* means the Administrator of the Environmental Protection Agency (EPA) or an authorized representative.

(c) *Primary standard* means a national primary ambient air quality standard promulgated pursuant to section 109 of the Act.

(d) *Secondary standard* means a national secondary ambient air quality standard promulgated pursuant to section 109 of the Act.

(e) *National standard* means either a primary or secondary standard.

(f) *Owner or operator* means any person who owns, leases, operates, controls, or supervises a facility, building, structure, or installation which directly or indirectly result or may result in emissions of any air pollutant for which a national standard is in effect.

(g) *Local agency* means any local government agency other than the State agency, which is charged with responsibility for carrying out a portion of the plan.

(h) *Regional Office* means one of the ten (10) EPA Regional Offices.

(i) *State agency* means the air pollution control agency primarily responsible for development and implementation of a plan under the Act.

(j) *Plan* means an implementation plan approved or promulgated under section 110 of 172 of the Act.

(k) *Point source* means the following:

(1) For particulate matter, sulfur oxides, carbon monoxide, volatile organic compounds (VOC) and nitrogen dioxide—

(i) Any stationary source the actual emissions of which are in excess of 90.7 metric tons (100 tons) per year of the pollutant in a region containing an area whose 1980 *urban place* population, as defined by the U.S. Bureau of the Census, was equal to or greater than 1 million.

(ii) Any stationary source the actual emissions of which are in excess of 22.7 metric tons (25 tons) per year of the pollutant in a region containing an area whose 1980 *urban place* population, as defined by the U.S. Bureau of the Census, was less than 1 million; or

(2) For lead or lead compounds measured as elemental lead, any stationary source that actually emits a total of 4.5 metric tons (5 tons) per year or more.

(l) *Area source* means any small residential, governmental, institutional, commercial, or industrial fuel combustion operations; onsite solid waste disposal facility; motor vehicles, aircraft vessels, or other transportation facilities or other miscellaneous sources identified through inventory techniques similar to those described in the ''AEROS Manual series, Vol. II AEROS User's Manual,'' EPA–450/2–76–029 December 1976.

(m) *Region* means an area designated as an air quality control region (AQCR) under section 107(c) of the Act.

(n) *Control strategy* means a combination of measures designated to achieve the aggregate reduction of emissions necessary for attainment and maintenance of national standards including, but not limited to, measures such as:

(1) Emission limitations.

(2) Federal or State emission charges or taxes or other economic incentives or disincentives.

(3) Closing or relocation of residential, commercial, or industrial facilities.

(4) Changes in schedules or methods of operation of commercial or industrial facilities or transportation systems, including, but not limited to, short-term changes made in accordance with standby plans.

(5) Periodic inspection and testing of motor vehicle emission control systems, at such time as the Administrator determines that such programs are feasible and practicable.

(6) Emission control measures applicable to in-use motor vehicles, including, but not limited to, measures such as mandatory maintenance, installation of emission control devices, and conversion to gaseous fuels.

(7) Any transportation control measure including those transportation measures listed in section 108(f) of the Clean Air Act as amended.

(8) Any variation of, or alternative to any measure delineated herein.

(9) Control or prohibition of a fuel or fuel additive used in motor vehicles, if such control or prohibition is necessary to achieve a national primary or secondary air quality standard and is approved by the Administrator under section 211(c)(4)(C) of the Act.

(o) *Reasonably available control technology (RACT)* means devices, systems, process modifications, or other apparatus or techniques that are reasonably available taking into account:

(1) The necessity of imposing such controls in order to attain and maintain a national ambient air quality standard;

(2) The social, environmental, and economic impact of such controls; and

(3) Alternative means of providing for attainment and maintenance of such standard, (This provision defines RACT for the purposes of §§51.110(c)(2) and 51.341(b) only.)

(p) *Compliance schedule* means the date or dates by which a source or category of sources is required to comply with specific emission limitations contained in an implementation plan and with any increments of progress toward such compliance.

(q) *Increments of progress* means steps toward compliance which will be taken by a specific source, including:

(1) Date of submittal of the source's final control plan to the appropriate air pollution control agency;

(2) Date by which contracts for emission control systems or process modifications will be awarded; or date by which orders will be issued for the purchase of component parts to accomplish emission control or process modification;

(3) Date of initiation of on-site construction or installation of emission control equipment or process change;

(4) Date by which on-site construction or installation of emission control equipment or process modification is to be completed; and

(5) Date by which final compliance is to be achieved.

(r) *Transportation control measure* means any measure that is directed toward reducing emissions of air pollutants from transportation sources. Such measures include, but are not limited to, those listed in section 108(f) of the Clean Air Act.

(s) *Volatile organic compounds (VOC)* means any compound of carbon, excluding carbon monoxide, carbon dioxide, carbonic acid, metallic carbides or carbonates, and ammonium carbonate, which participates in atmospheric photochemical reactions.

(1) This includes any such organic compound other than the following, which have been determined to have negligible photochemical reactivity: methane; ethane; methylene chloride (dichloromethane); 1,1,1-trichloroethane (methyl chloroform); 1,1,2-trichloro-1,2,2-trifluoroethane (CFC–113); trichlorofluoromethane (CFC–11); dichlorodifluoromethane (CFC–12); chlorodifluoromethane (HCFC–22); trifluoromethane (HFC–23); 1,2-dichloro 1,1,2,2-tetrafluoroethane

(CFC–114); chloropentafluoroethane (CFC–115); 1,1,1-trifluoro 2,2-dichloroethane (HCFC–123); 1,1,1,2-tetrafluoroethane (HFC–134a); 1,1-dichloro 1-fluoroethane (HCFC–141b); 1-chloro 1,1-difluoroethane (HCFC–142b); 2-chloro-1,1,1,2-tetrafluoroethane (HCFC–124); pentafluoroethane (HFC–125); 1,1,2,2-tetrafluoroethane (HFC–134); 1,1,1-trifluoroethane (HFC–143a); 1,1-difluoroethane (HFC–152a); parachlorobenzotrifluoride (PCBTF); cyclic, branched, or linear completely methylated siloxanes; acetone; perchloroethylene (tetrachloroethylene) and perfluorocarbon compounds which fall into these classes:

(i) Cyclic, branched, or linear, completely fluorinated alkanes;

(ii) Cyclic, branched, or linear, completely fluorinated ethers with no unsaturations;

(iii) Cyclic, branched, or linear, completely fluorinated tertiary amines with no unsaturations; and

(iv) Sulfur containing perfluorocarbons with no unsaturations and with sulfur bonds only to carbon and fluorine.

(2) For purposes of determining compliance with emissions limits, VOC will be measured by the test methods in the approved State implementation plan (SIP) or 40 CFR part 60, appendix A, as applicable. Where such a method also measures compounds with negligible photochemical reactivity, these negligibility-reactive compounds may be excluded as VOC if the amount of such compounds is accurately quantified, and such exclusion is approved by the enforcement authority.

(3) As a precondition to excluding these compounds as VOC or at any time thereafter, the enforcement authority may require an owner or operator to provide monitoring or testing methods and results demonstrating, to the satisfaction of the enforcement authority, the amount of negligibly-reactive compounds in the source's emissions.

(4) For purposes of Federal enforcement for a specific source, the EPA shall use the test methods specified in the applicable EPA-approved SIP, in a permit issued pursuant to a program approved or promulgated under title V of the Act, or under 40 CFR part 51, subpart I or appendix S, or under 40 CFR parts 52 or 60. The EPA shall not be bound by any State determination as to appropriate methods for testing or monitoring negligibly-reactive compounds if such determination is not reflected in any of the above provisions.

(t)–(w) [Reserved]

(x) *Time period* means any period of time designated by hour, month, season, calendar year, averaging time, or other suitable characteristics, for which ambient air quality is estimated.

(y) *Variance* means the temporary deferral of a final compliance date for an individual source subject to an approved regulation, or a temporary change to an approved regulation as it applies to an individual source.

(z) *Emission limitation* and *emission standard* mean a requirement established by a State, local government, or the Administrator which limits the quantity, rate, or concentration of emissions of air pollutants on a continuous basis, including any requirements which limit the level of opacity, prescribe equipment, set fuel specifications, or prescribe operation or maintenance procedures for a source to assure continuous emission reduction.

(aa) *Capacity factor* means the ratio of the average load on a machine or equipment for the period of time considered to the capacity rating of the machine or equipment.

(bb) *Excess emissions* means emissions of an air pollutant in excess of an emission standard.

(cc) *Nitric acid plant* means any facility producing nitric acid 30 to 70 percent in strength by either the pressure or atmospheric pressure process.

(dd) *Sulfuric acid plant* means any facility producing sulfuric acid by the contact process by burning elemental sulfur, alkylation acid, hydrogen sulfide, or acid sludge, but does not include facilities where conversion to sulfuric acid is utilized primarily as a means of preventing emissions to the atmosphere of sulfur dioxide or other sulfur compounds.

(ee) *Fossil fuel-fired steam generator* means a furnance or bioler used in the process of burning fossil fuel for the primary purpose of producing steam by heat transfer.

(ff) *Stack* means any point in a source designed to emit solids, liquids, or gases into the air, including a pipe or duct but not including flares.

(gg) *A stack in existence* means that the owner or operator had (1) begun, or caused to begin, a continuous program of physical on-site construction of the stack or (2) entered into binding agreements or contractual obligations, which could not be cancelled or modified without substantial loss to the owner or operator, to undertake a program of construction of the stack to be completed within a reasonable time.

(hh)(1) *Dispersion technique* means any technique which attempts to affect the concentration of a pollutant in the ambient air by:

(i) Using that portion of a stack which exceeds good engineering practice stack height:

(ii) Varying the rate of emission of a pollutant according to atmospheric conditions or ambient concentrations of that pollutant; or

(iii) Increasing final exhaust gas plume rise by manipulating source process parameters, exhaust gas parameters, stack parameters, or combining exhaust gases from several existing stacks into one stack; or other selective handling of exhaust gas streams so as to increase the exhaust gas plume rise.

(2) The preceding sentence does not include:

(i) The reheating of a gas stream, following use of a pollution control system, for the purpose of returning the gas to the temperature at which it was originally discharged from the facility generating the gas stream;

(ii) The merging of exhaust gas streams where:

(A) The source owner or operator demonstrates that the facility was originally designed and constructed with such merged gas streams;

(B) After July 8, 1985 such merging is part of a change in operation at the facility that includes the installation of pollution controls and is accompanied by a net reduction in the allowable emissions of a pollutant. This exclusion from the definition of *dispersion techniques* shall apply only to the emission limitation for the pollutant affected by such change in operation; or

(C) Before July 8, 1985, such merging was part of a change in operation at the facility that included the installation of emissions control equipment or was carried out for sound economic or engineering reasons. Where there was an increase in the emission limitation or, in the event that no emission limitation was in existence prior to the merging, an increase in the quantity of pollutants actually emitted prior to the merging, the reviewing agency shall presume that merging was significantly motivated by an intent to gain emissions credit for greater dispersion. Absent a demonstration by the source owner or operator that merging was not significantly motivated by such intent, the reviewing agency shall deny credit for the effects of such merging in calculating the allowable emissions for the source;

(iii) Smoke management in agricultural or silvicultural prescribed burning programs;

(iv) Episodic restrictions on residential woodburning and open burning; or

(v) Techniques under § 51.100(hh)(1)(iii) which increase final exhaust gas plume rise where the resulting allowable emissions of sulfur dioxide from the facility do not exceed 5,000 tons per year.

(ii) *Good engineering practice* (GEP) stack height means the greater of:

(1) 65 meters, measured from the ground-level elevation at the base of the stack:

(2)(i) For stacks in existence on January 12, 1979, and for which the owner or operator had obtained all applicable permits or approvals required under 40 CFR parts 51 and 52.

$$H_g=2.5H,$$

provided the owner or operator produces evidence that this equation was actually relied on in establishing an emission limitation:

(ii) For all other stacks,

$$H_g=H + 1.5L$$

where

H_g=good engineering practice stack height, measured from the ground-level elevation at the base of the stack,

H=height of nearby structure(s) measured from the ground-level elevation at the base of the stack.

L=lesser dimension, height or projected width, of nearby structure(s)

provided that the EPA, State or local control agency may require the use of a field study or fluid model to verify GEP stack height for the source; or

(3) The height demonstrated by a fluid model or a field study approved by the EPA State or local control agency, which ensures that the emissions from a stack do not result in excessive concentrations of any air pollutant as a result of atmospheric downwash, wakes, or eddy effects created by the source itself, nearby structures or nearby terrain features.

(jj) *Nearby* as used in § 51.100(ii) of this part is defined for a specific structure or terrain feature and

(1) For purposes of applying the formulae provided in § 51.100(ii)(2) means that distance up to five times the lesser of the height or the width dimension of a structure, but not greater than 0.8 km (½ mile), and

(2) For conducting demonstrations under § 51.100(ii)(3) means not greater than 0.8 km (½ mile), except that the portion of a terrain feature may be considered to be nearby which falls within a distance of up to 10 times the maximum height (H_t) of the feature, not to exceed 2 miles if such feature achieves a height (H_t) 0.8 km from the stack that is at least 40 percent of the GEP stack height determined by the formulae provided in § 51.100(ii)(2)(ii) of this part or 26 meters, whichever is greater, as measured from the ground-level elevation at the base of the stack. The height of the structure or terrain feature is measured from the ground-level elevation at the base of the stack.

(kk) *Excessive concentration* is defined for the purpose of determining good engineering practice stack height under § 51.100(ii)(3) and means:

(1) For sources seeking credit for stack height exceeding that established under § 51.100(ii)(2) a maximum ground-level concentration due to emissions from a stack due in whole or part to downwash, wakes, and eddy effects produced by nearby structures or nearby terrain features which individually is at least 40 percent in excess of the maximum concentration experienced in the absence of such downwash, wakes, or eddy effects and which contributes to a total concentration due to emissions from all sources that is greater than an ambient air quality standard. For sources subject to the prevention of significant deterioration program (40 CFR 51.166 and 52.21), an excessive concentration alternatively means a maximum ground-level concentration due to emissions from a stack due in whole or part to downwash, wakes, or eddy effects produced by nearby structures or nearby terrain features which individually is at least 40 percent in excess of the maximum concentration experienced in the absence of such downwash, wakes, or eddy effects and greater than a prevention of significant deterioration increment. The allowable emission rate to be used in making demonstrations under this part shall be prescribed by the new source performance standard that is applicable to the source category unless the owner or operator demonstrates that this emission rate is infeasible. Where such demonstrations are approved by the authority administering the State implementation plan, an alternative emission rate shall be established in consultation with the source owner or operator.

(2) For sources seeking credit after October 11, 1983, for increases in existing stack heights up to the heights established under § 51.100(ii)(2), either (i) a maximum ground-level concentration due in whole or part to downwash, wakes or eddy effects as provided in paragraph (kk)(1) of this section, except that the emission rate specified by any applicable State implementation plan (or, in the absence of such a limit, the actual emission rate) shall be used, or (ii) the actual presence of a local nuisance caused by the existing stack, as determined by the authority administering the State implementation plan; and

(3) For sources seeking credit after January 12, 1979 for a stack height determined under § 51.100(ii)(2) where the authority administering the State implementation plan requires the use of a field study or fluid model to verify GEP stack height, for sources seeking stack height credit after November 9, 1984 based on the aerodynamic influence of cooling towers, and for sources

seeking stack height credit after December 31, 1970 based on the aerodynamic influence of structures not adequately represented by the equations in §51.100(ii)(2), a maximum ground-level concentration due in whole or part to downwash, wakes or eddy effects that is at least 40 percent in excess of the maximum concentration experienced in the absence of such downwash, wakes, or eddy effects.

(ll)–(mm) [Reserved]

(nn) Intermittent control system (ICS) means a dispersion technique which varies the rate at which pollutants are emitted to the atmosphere according to meteorological conditions and/or ambient concentrations of the pollutant, in order to prevent ground-level concentrations in excess of applicable ambient air quality standards. Such a dispersion technique is an ICS whether used alone, used with other dispersion techniques, or used as a supplement to continuous emission controls (i.e., used as a supplemental control system).

(oo) *Particulate matter* means any airborne finely divided solid or liquid material with an aerodynamic diameter smaller than 100 micrometers.

(pp) *Particulate matter emissions* means all finely divided solid or liquid material, other than uncombined water, emitted to the ambient air as measured by applicable reference methods, or an equivalent or alternative method, specified in this chapter, or by a test method specified in an approved State implementation plan.

(qq) PM_{10} means particulate matter with an aerodynamic diameter less than or equal to a nominal 10 micrometers as measured by a reference method based on appendix J of part 50 of this chapter and designated in accordance with part 53 of this chapter or by an equivalent method designated in accordance with part 53 of this chapter.

(rr) PM_{10} emissions means finely divided solid or liquid material, with an aerodynamic diameter less than or equal to a nominal 10 micrometers emitted to the ambient air as measured by an applicable reference method, or an equivalent or alternative method, specified in this chapter or by a test method specified in an approved State implementation plan.

(ss) *Total suspended particulate* means particulate matter as measured by the method described in appendix B of part 50 of this chapter.

[51 FR 40661, Nov. 7, 1986, as amended at 52 FR 24712, July 1, 1987; 57 FR 3945, Feb. 3, 1992; 61 FR 4590, Feb. 7, 1996; 61 FR 16060, Apr. 11, 1996; 61 FR 30162, June 14, 1996]

§ 51.101 Stipulations.

Nothing in this part will be construed in any manner:

(a) To encourage a State to prepare, adopt, or submit a plan which does not provide for the protection and enhancement of air quality so as to promote the public health and welfare and productive capacity.

(b) To encourage a State to adopt any particular control strategy without taking into consideration the cost-effectiveness of such control strategy in relation to that of alternative control strategies.

(c) To preclude a State from employing techniques other than those specified in this part for purposes of estimating air quality or demonstrating the adequacy of a control strategy, provided that such other techniques are shown to be adequate and appropriate for such purposes.

(d) To encourage a State to prepare, adopt, or submit a plan without taking into consideration the social and economic impact of the control strategy set forth in such plan, including, but not limited to, impact on availability of fuels, energy, transportation, and employment.

(e) To preclude a State from preparing, adopting, or submitting a plan which provides for attainment and maintenance of a national standard through the application of a control strategy not specifically identified or described in this part.

(f) To preclude a State or political subdivision thereof from adopting or enforcing any emission limitations or other measures or combinations thereof to attain and maintain air quality better than that required by a national standard.

(g) To encourage a State to adopt a control strategy uniformly applicable throughout a region unless there is no satisfactory alternative way of providing for attainment and maintenance of

a national standard throughout such region.

[61 FR 30163, June 14, 1996]

§51.102 Public hearings.

(a) Except as otherwise provided in paragraph (c) of this section, States must conduct one or more public hearings on the following prior to adoption and submission to EPA of:

(1) Any plan or revision of it required by §51.104(a).

(2) Any individual compliance schedule under (§51.260).

(3) Any revision under §51.104(d).

(b) Separate hearings may be held for plans to implement primary and secondary standards.

(c) No hearing will be required for any change to an increment of progress in an approved individual compliance schedule unless such change is likely to cause the source to be unable to comply with the final compliance date in the schedule. The requirements of §§51.104 and 51.105 will be applicable to such schedules, however.

(d) Any hearing required by paragraph (a) of this section will be held only after reasonable notice, which will be considered to include, at least 30 days prior to the date of such hearing(s):

(1) Notice given to the public by prominent advertisement in the area affected announcing the date(s), time(s), and place(s) of such hearing(s);

(2) Availability of each proposed plan or revision for public inspection in at least one location in each region to which it will apply, and the availability of each compliance schedule for public inspection in at least one location in the region in which the affected source is located;

(3) Notification to the Administrator (through the appropriate Regional Office);

(4) Notification to each local air pollution control agency which will be significantly impacted by such plan, schedule or revision;

(5) In the case of an interstate region, notification to any other States included, in whole or in part, in the regions which are significantly impacted by such plan or schedule or revision.

(6) In the case of hearings on AQMA plans:

(i) Notification to the chief executives of affected local governments, planning agencies, transportation agencies, environmental control agencies, economic development agencies, and any other affected States, and

(ii) Public notice of alternative analysis and plan development procedures approved under §51.63.

(e) The State must prepare and retain, for inspection by the Administrator upon request, a record of each hearing. The record must contain, as a minimum, a list of witnesses together with the text of each presentation.

(f) The State must submit with the plan, revision, or schedule a certification that the hearing required by paragraph (a) of this section was held in accordance with the notice required by paragraph (d) of this section.

(g) Upon written application by a State agency (through the appropriate Regional Office), the Administrator may approve State procedures for public hearings. The following criteria apply:

(1) Procedures approved under this section shall be deemed to satisfy the requirement of this part regarding public hearings.

(2) Procedures different from this part may be approved if they—

(i) Ensure public participation in matters for which hearings are required; and

(ii) Provide adequate public notification of the opportunity to participate.

(3) The Administrator may impose any conditions on approval he or she deems necessary.

§51.103 Submission of plans, preliminary review of plans.

(a) The State makes an official plan submission to EPA only when the submission conforms to the requirements of appendix V to this part, and the State delivers five copies of the plan to the appropriate Regional Office, with a letter giving notice of such action. The State must adopt the plan and the Governor or his designee must submit it to EPA as follows:

(1) For any primary standard, or revision thereof, within 9 months after promulgation of such standard.

(2) For any secondary standard, or revision thereof, within 9 months after

promulgation of such secondary standard or by such later date prescribed or by such later date prescribed by the Administrator under subpart R of this part.

(b) Upon request of a State, the Administrator will provide preliminary review of a plan or portion thereof submitted in advance of the date such plan is due. Such requests must be made in writing to the appropriate Regional Office and must be accompanied by five copies of the materials to be reviewed. Requests for preliminary review do not relieve a State of the responsibility of adopting and submitting plans in accordance with prescribed due dates.

[51 FR 40661, Nov. 7, 1986, as amended at 55 FR 5830, Feb. 16, 1990]

§ 51.104 Revisions.

(a) States may revise the plan from time to time consistent with the requirements applicable to implementation plans under this part.

(b) The States must submit any revision of any regulation or any compliance schedule under paragraph (c) of this section to the Administrator no later than 60 days after its adoption.

(c) EPA will approve revisions only after applicable hearing requirements of § 51.102 have been satisfied.

(d) In order for a variance to be considered for approval as a revision to the State implementation plan, the State must submit it in accordance with the requirements of this section.

[51 FR 40661, Nov. 7, 1986, as amended at 61 FR 16060, Apr. 11, 1996]

§ 51.105 Approval of plans.

Revisions of a plan, or any portion thereof, will not be considered part of an applicable plan until such revisions have been approved by the Administrator in accordance with this part.

[51 FR 40661, Nov. 7, 1986, as amended at 60 FR 33922, June 29, 1995]

Subpart G—Control Strategy

SOURCE: 51 FR 40665, Nov. 7, 1986, unless otherwise noted.

§ 51.110 Attainment and maintenance of national standards.

(a) Each plan providing for the attainment of a primary or secondary standard must specify the projected attainment date.

(b)–(f) [Reserved]

(g) During developing of the plan, EPA encourages States to identify alternative control strategies, as well as the costs and benefits of each such alternative for attainment or maintenance of the national standard.

[51 FR 40661 Nov. 7, 1986 as amended at 61 FR 16060, Apr. 11, 1996; 61 FR 30163, June 14, 1996]

§ 51.111 Description of control measures.

Each plan must set forth a control strategy which includes the following:

(a) A description of enforcement methods including, but not limited to:

(1) Procedures for monitoring compliance with each of the selected control measures,

(2) Procedures for handling violations, and

(3) A designation of agency responsibility for enforcement of implementation.

(b) [Reserved]

[51 FR 40665, Nov. 7, 1986, as amended at 60 FR 33922, June 29, 1995]

§ 51.112 Demonstration of adequacy.

(a) Each plan must demonstrate that the measures, rules, and regulations contained in it are adequate to provide for the timely attainment and maintenance of the national standard that it implements.

(1) The adequacy of a control strategy shall be demonstrated by means of applicable air quality models, data bases, and other requirements specified in the appendix W of this part (''Guideline on Air Quality Models (Revised)'' (1986), supplement A (1987), supplement B (1993) and supplement C (1995)). The Guideline and its supplements (EPA Publication No. 450/2–78–027R) are also for sale from the U.S. Department of Commerce, National Technical Information Service, 5825 Port Royal Road, Springfield, VA 22161.

(2) Where an air quality model specified in appendix W of this part (''Guideline on Air Quality Models (Revised)''

(1986), supplement A (1987), supplement B (1993) and supplement C (1995)) is inappropriate, the model may be modified or another model substituted. Such a modification or substitution of a model may be made on a case-by-case basis or, where appropriate, on a generic basis for a specific state program. Written approval of the Administrator must be obtained for any modification or substitution. In addition, use of a modified or substituted model must be subject to notice and opportunity for public comment under procedures set forth in §51.102.

(b) The demonstration must include the following:

(1) A summary of the computations, assumptions, and judgments used to determine the degree of reduction of emissions (or reductions in the growth of emissions) that will result from the implementation of the control strategy.

(2) A presentation of emission levels expected to result from implementation of each measure of the control strategy.

(3) A presentation of the air quality levels expected to result from implementation of the overall control strategy presented either in tabular form or as an isopleth map showing expected maximum pollutant concentrations.

(4) A description of the dispersion models used to project air quality and to evaluate control strategies.

(5) For interstate regions, the analysis from each constituent State must, where practicable, be based upon the same regional emission inventory and air quality baseline.

[51 FR 40665, Nov. 7, 1986, as amended at 58 FR 38821, July 20, 1993; 60 FR 40468, Aug. 9, 1995]

§51.113 [Reserved]

§51.114 Emissions data and projections.

(a) Except for lead, each plan must contain a detailed inventory of emissions from point and area sources. Lead requirements are specified in §51.117. The inventory must be based upon measured emissions or, where measured emissions are not available, documented emission factors.

(b) Each plan must contain a summary of emission levels projected to result from application of the new control strategy.

(c) Each plan must identify the sources of the data used in the projection of emissions.

§51.115 Air quality data and projections.

(a) Each plan must contain a summary of data showing existing air quality.

(b) Each plan must:

(1) Contain a summary of air quality concentrations expected to result from application of the control strategy, and

(2) Identify and describe the dispersion model, other air quality model, or receptor model used.

(c) Actual measurements of air quality must be used where available if made by methods specified in appendix C to part 58 of this chapter. Estimated air quality using appropriate modeling techniques may be used to supplement measurements.

(d) For purposes of developing a control strategy, background concentration shall be taken into consideration with respect to particulate matter. As used in this subpart, background concentration is that portion of the measured ambient levels that cannot be reduced by controlling emissions from man-made sources.

(e) In developing an ozone control strategy for a particular area, background ozone concentrations and ozone transported into an area must be considered. States may assume that the ozone standard will be attained in upwind areas.

§51.116 Data availability.

(a) The State must retain all detailed data and calculations used in the preparation of each plan or each plan revision, and make them available for public inspection and submit them to the Administrator at his request.

(b) The detailed data and calculations used in the preparation of plan revisions are not considered a part of the plan.

(c) Each plan must provide for public availability of emission data reported

by source owners or operators or otherwise obtained by a State or local agency. Such emission data must be correlated with applicable emission limitations or other measures. As used in this paragraph, *correlated* means presented in such a manner as to show the relationship between measured or estimated amounts of emissions and the amounts of such emissions allowable under the applicable emission limitations or other measures.

§ 51.117 Additional provisions for lead.

In addition to other requirements in §§ 51.100 through 51.116 the following requirements apply to lead. To the extent they conflict, there requirements are controlling over those of the proceeding sections.

(a) *Control strategy demonstration.* Each plan must contain a demonstration showing that the plan will attain and maintain the standard in the following areas:

(1) Areas in the vicinity of the following point sources of lead: Primary lead smelters, Secondary lead smelters, Primary copper smelters, Lead gasoline additive plants, Lead-acid storage battery manufacturing plants that produce 2,000 or more batteries per day. Any other stationary source that actually emits 25 or more tons per year of lead or lead compounds measured as elemental lead.

(2) Any other area that has lead air concentrations in excess of the national ambient air quality standard concentration for lead, measured since January 1, 1974.

(b) *Time period for demonstration of adequacy.* The demonstration of adequacy of the control strategy required under § 51.112 may cover a longer period if allowed by the appropriate EPA Regional Administrator.

(c) *Special modeling provisions.* (1) For urbanized areas with measured lead concentrations in excess of 4.0 $\mu g/m^3$, quarterly mean measured since January 1, 1974, the plan must employ the modified rollback model for the demonstration of attainment as a minimum, but may use an atmospheric dispersion model if desired, consistent with requirements contained in § 51.112(a). If a proportional model is used, the air quality data should be the same year as the emissions inventory required under the paragraph e.

(2) For each point source listed in § 51.117(a), that plan must employ an atmospheric dispersion model for demonstration of attainment, consistent with requirements contained in § 51.112(a).

(3) For each area in the vicinity of an air quality monitor that has recorded lead concentrations in excess of the lead national standard concentration, the plan must employ the modified rollback model as a minimum, but may use an atmospheric dispersion model if desired for the demonstration of attainment, consistent with requirements contained in § 51.112(a).

(d) *Air quality data and projections.* (1) Each State must submit to the appropriate EPA Regional Office with the plan, but not part of the plan, all lead air quality data measured since January 1, 1974. This requirement does not apply if the data has already been submitted.

(2) The data must be submitted in accordance with the procedures and data forms specified in Chapter 3.4.0 of the ''AEROS User's Manual'' concerning storage and retrieval of aerometric data (SAROAD) except where the Regional Administrator waives this requirement.

(3) If additional lead air quality data are desired to determine lead air concentrations in areas suspected of exceeding the lead national ambient air quality standard, the plan may include data from any previously collected filters from particulate matter high volume samplers. In determining the lead content of the filters for control strategy demonstration purposes, a State may use, in addition to the reference method, X-ray fluorescence or any other method approved by the Regional Administrator.

(e) *Emissions data.* (1) The point source inventory on which the summary of the baseline lead emissions inventory is based must contain all sources that emit five or more tons of lead per year.

(2) Each State must submit lead emissions data to the appropriate EPA Regional Office with the original plan. The submission must be made with the plan, but not as part of the plan, and

must include emissions data and information related to point and area source emissions. The emission data and information should include the information identified in the Hazardous and Trace Emissions System (HATREMS) point source coding forms for all point sources and the area source coding forms for all sources that are not point sources, but need not necessarily be in the format of those forms.

[41 FR 18388, May 3, 1976, as amended at 58 FR 38822, July 20, 1993]

§51.118 Stack height provisions.

(a) The plan must provide that the degree of emission limitation required of any source for control of any air pollutant must not be affected by so much of any source's stack height that exceeds good engineering practice or by any other dispersion technique, except as provided in §51.118(b). The plan must provide that before a State submits to EPA a new or revised emission limitation that is based on a good engineering practice stack height that exceeds the height allowed by §51.100(ii) (1) or (2), the State must notify the public of the availabilty of the demonstration study and must provide opportunity for a public hearing on it. This section does not require the plan to restrict, in any manner, the actual stack height of any source.

(b) The provisions of §51.118(a) shall not apply to (1) stack heights in existence, or dispersion techniques implemented on or before December 31, 1970, except where pollutants are being emitted from such stacks or using such dispersion techniques by sources, as defined in section 111(a)(3) of the Clean Air Act, which were constructed, or reconstructed, or for which major modifications, as defined in §§51.165(a)(1)(v)(A), 51.166(b)(2)(i) and 52.21(b)(2)(i), were carried out after December 31, 1970; or (2) coal-fired steam electric generating units subject to the provisions of section 118 of the Clean Air Act, which commenced operation before July 1, 1957, and whose stacks were construced under a construction contract awarded before February 8, 1974.

§51.119 Intermittent control systems.

(a) The use of an intermittent control system (ICS) may be taken into account in establishing an emission limitation for a pollutant under a State implementation plan, provided:

(1) The ICS was implemented before December 31, 1970, according to the criteria specified in §51.119(b).

(2) The extent to which the ICS is taken into account is limited to reflect emission levels and associated ambient pollutant concentrations that would result if the ICS was the same as it was before December 31, 1970, and was operated as specified by the operating system of the ICS before December 31, 1970.

(3) The plan allows the ICS to compensate only for emissions from a source for which the ICS was implemented before December 31, 1970, and, in the event the source has been modified, only to the extent the emissions correspond to the maximum capacity of the source before December 31, 1970. For purposes of this paragraph, a source for which the ICS was implemented is any particular structure or equipment the emissions from which were subject to the ICS operating procedures.

(4) The plan requires the continued operation of any constant pollution control system which was in use before December 31, 1970, or the equivalent of that system.

(5) The plan clearly defines the emission limits affected by the ICS and the manner in which the ICS is taken into account in establishing those limits.

(6) The plan contains requirements for the operation and maintenance of the qualifying ICS which, together with the emission limitations and any other necessary requirements, will assure that the national ambient air quality standards and any applicable prevention of significant deterioration increments will be attained and maintained. These requirements shall include, but not necessarily be limited to, the following:

(i) Requirements that a source owner or operator continuously operate and maintain the components of the ICS specified at §51.119(b)(3) (ii)–(iv) in a manner which assures that the ICS is

at least as effective as it was before December 31, 1970. The air quality monitors and meteorological instrumentation specified at § 51.119(b) may be operated by a local authority or other entity provided the source has ready access to the data from the monitors and instrumentation.

(ii) Requirements which specify the circumstances under which, the extent to which, and the procedures through which, emissions shall be curtailed through the activation of ICS.

(iii) Requirements for recordkeeping which require the owner or operator of the source to keep, for periods of at least 3 years, records of measured ambient air quality data, meteorological information acquired, and production data relating to those processes affected by the ICS.

(iv) Requirements for reporting which require the owner or operator of the source to notify the State and EPA within 30 days of a NAAQS violation pertaining to the pollutant affected by the ICS.

(7) Nothing in this paragraph affects the applicability of any new source review requirements or new source performance standards contained in the Clean Air Act or 40 CFR subchapter C. Nothing in this paragraph precludes a State from taking an ICS into account in establishing emission limitations to any extent less than permitted by this paragraph.

(b) An intermittent control system (ICS) may be considered implemented for a pollutant before December 31, 1970, if the following criteria are met:

(1) The ICS must have been established and operational with respect to that pollutant prior to December 31, 1970, and reductions in emissions of that pollutant must have occurred when warranted by meteorological and ambient monitoring data.

(2) The ICS must have been designed and operated to meet an air quality objective for that pollutant such as an air quality level or standard.

(3) The ICS must, at a minimum, have included the following components prior to December 31, 1970:

(i) *Air quality monitors.* An array of sampling stations whose location and type were consistent with the air quality objective and operation of the system.

(ii) *Meteorological instrumentation.* A meteorological data acquisition network (may be limited to a single station) which provided meteorological prediction capabilities sufficient to determine the need for, and degree of, emission curtailments necessary to achieve the air quality design objective.

(iii) *Operating system.* A system of established procedures for determining the need for curtailments and for accomplishing such curtailments. Documentation of this system, as required by paragraph (n)(4), may consist of a compendium of memoranda or comparable material which define the criteria and procedures for curtailments and which identify the type and number of personnel authorized to initiate curtailments.

(iv) *Meteorologist.* A person, schooled in meteorology, capable of interpreting data obtained from the meteorological network and qualified to forecast meteorological incidents and their effect on ambient air quality. Sources may have obtained meteorological services through a consultant. Services of such a consultant could include sufficient training of source personnel for certain operational procedures, but not for design, of the ICS.

(4) Documentation sufficient to support the claim that the ICS met the criteria listed in this paragraph must be provided. Such documentation may include affidavits or other documentation.

§ 51.120 Requirements for state implementation plan revisions relating to new motor vehicles.

(a) The EPA Administrator finds that the State Implementation Plans (SIPs) for the States of Connecticut, Delaware, Maine, Maryland, Massachusetts, New Hampshire, New Jersey, New York, Pennsylvania, Rhode Island, and Vermont, the portion of Virginia included (as of November 15, 1990) within the Consolidated Metropolitan Statistical Area that includes the District of Columbia, are substantially inadequate to comply with the requirements of section 110(a)(2)(D) of the Clean Air

Act, 42 U.S.C. 7410(a)(2)(D), and to mitigate adequately the interstate pollutant transport described in section 184 of the Clean Air Act, 42 U.S.C. 7511C, to the extent that they do not provide for emission reductions from new motor vehicles in the amount that would be achieved by the Ozone Transport Commission low emission vehicle (OTC LEV) program described in paragraph (c) of this section. This inadequacy will be deemed cured for each of the aforementioned states (including the District of Columbia) in the event that EPA determines through rulemaking that a national LEV-equivalent new motor vehicle emission control program is an acceptable alternative for OTC LEV and finds that such program is in effect. In the event no such finding is made, each of those states must adopt and submit to EPA by February 15, 1996 a SIP revision meeting the requirements of paragraph (b) of this section in order to cure the SIP inadequacy.

(b) If a SIP revision is required under paragraph (a) of this section, it must contain the OTC LEV program described in paragraph (c) of this section unless the State adopts and submits to EPA, as a SIP revision, other emission-reduction measures sufficient to meet the requirements of paragraph (d) of this section. If a State adopts and submits to EPA, as a SIP revision, other emission-reduction measures pursuant to paragraph (d) of this section, then for purposes of determining whether such a SIP revision is complete within the meaning of section 110(k)(1) (and hence is eligible at least for consideration to be approved as satisfying paragraph (d) of this section), such a SIP revision must contain other adopted emission-reduction measures that, together with the identified potentially broadly practicable measures, achieve at least the minimum level of emission reductions that could potentially satisfy the requirements of paragraph (d) of this section. All such measures must be fully adopted and enforceable.

(c) The OTC LEV program is a program adopted pursuant to section 177 of the Clean Air Act.

(1) The OTC LEV program shall contain the following elements:

(i) It shall apply to all new 1999 and later model year passenger cars and light-duty trucks (0–5750 pounds loaded vehicle weight), as defined in Title 13, California Code of Regulations, section 1900(b)(11) and (b)(8), respectively, that are sold, imported, delivered, purchased, leased, rented, acquired, received, or registered in any area of the state that is in the Northeast Ozone Transport Region as of December 19, 1994.

(ii) All vehicles to which the OTC LEV program is applicable shall be required to have a certificate from the California Air Resources Board (CARB) affirming compliance with California standards.

(iii) All vehicles to which this LEV program is applicable shall be required to meet the mass emission standards for Non-Methane Organic Gases (NMOG), Carbon Monoxide (CO), Oxides of Nitrogen (NO_X), Formaldehyde (HCHO), and particulate matter (PM) as specified in Title 13, California Code of Regulations, section 1960.1(f)(2) (and formaldehyde standards under section 1960.1(e)(2), as applicable) or as specified by California for certification as a TLEV (Transitional Low-Emission Vehicle), LEV (Low-Emission Vehicle), ULEV (Ultra-Low-Emission Vehicle), or ZEV (Zero-Emission Vehicle) under section 1960.1(g)(1) (and section 1960.1(e)(3), for formaldehyde standards, as applicable).

(iv) All manufacturers of vehicles subject to the OTC LEV program shall be required to meet the fleet average NMOG exhaust emission values for production and delivery for sale of their passenger cars, light-duty trucks 0–3750 pounds loaded vehicle weight, and light-duty trucks 3751–5750 pounds loaded vehicle weight specified in Title 13, California Code of Regulations, section 1960.1(g)(2) for each model year beginning in 1999. A state may determine not to implement the NMOG fleet average in the first model year of the program if the state begins implementation of the program late in a calendar year. However, all states must implement the NMOG fleet average in any full model years of the LEV program.

(v) All manufacturers shall be allowed to average, bank and trade credits in the same manner as allowed

under the program specified in Title 13, California Code of Regulations, section 1960.1(g)(2) footnote 7 for each model year beginning in 1999. States may account for credits banked by manufacturers in California or New York in years immediately preceding model year 1999, in a manner consistent with California banking and discounting procedures.

(vi) The provisions for small volume manufacturers and intermediate volume manufacturers, as applied by Title 13, California Code of Regulations to California's LEV program, shall apply. Those manufacturers defined as small volume manufacturers and intermediate volume manufacturers in California under California's regulations shall be considered small volume manufacturers and intermediate volume manufacturers under this program.

(vii) The provisions for hybrid electric vehicles (HEVs), as defined in Title 13 California Code of Regulations, section 1960.1, shall apply for purposes of calculating fleet average NMOG values.

(viii) The provisions for fuel-flexible vehicles and dual-fuel vehicles specified in Title 13, California Code of Regulations, section 1960.1(g)(1) footnote 4 shall apply.

(ix) The provisions for reactivity adjustment factors, as defined by Title 13, California Code of Regulations, shall apply.

(x) The aforementioned state OTC LEV standards shall be identical to the aforementioned California standards as such standards exist on December 19, 1994.

(xi) All states' OTC LEV programs must contain any other provisions of California's LEV program specified in Title 13, California Code of Regulations necessary to comply with section 177 of the Clean Air Act.

(2) States are not required to include the mandate for production of ZEVs specified in Title 13, California Code of Regulations, section 1960.1(g)(2) footnote 9.

(3) Except as specified elsewhere in this section, states may implement the OTC LEV program in any manner consistent with the Act that does not decrease the emissions reductions or jeopardize the effectiveness of the program.

(d) The SIP revision that paragraph (b) of this section describes as an alternative to the OTC LEV program described in paragraph (c) of this section must contain a set of state-adopted measures that provides at least the following amount of emission reductions in time to bring serious ozone nonattainment areas into attainment by their 1999 attainment date:

(1) Reductions at least equal to the difference between:

(i) The nitrogen oxides (NO_X) emission reductions from the 1990 statewide emissions inventory achievable through implementation of all of the Clean Air Act-mandated and potentially broadly practicable control measures throughout all portions of the state that are within the Northeast Ozone Transport Region created under section 184(a) of the Clean Air Act as of December 19, 1994; and

(ii) A reduction in NO_X emissions from the 1990 statewide inventory in such portions of the state of 50% or whatever greater reduction is necessary to prevent significant contribution to nonattainment in, or interference with maintenance by, any downwind state.

(2) Reductions at least equal to the difference between:

(i) The VOC emission reductions from the 1990 statewide emissions inventory achievable through implementation of all of the Clean Air Act-mandated and potentially broadly practicable control measures in all portions of the State in, or near and upwind of, any of the serious or severe ozone nonattainment areas lying in the series of such areas running northeast from the Washington, DC, ozone nonattainment area to and including the Portsmouth, New Hampshire ozone nonattainment area; and

(ii) A reduction in VOC emissions from the 1990 emissions inventory in all such areas of 50% or whatever greater reduction is necessary to prevent significant contribution to nonattainment in, or interference with maintenance by, any downwind state.

[60 FR 4736, Jan. 24, 1995]

Subpart H—Prevention of Air Pollution Emergency Episodes

SOURCE: 51 FR 40668, Nov. 7, 1986, unless otherwise noted.

§51.150 Classification of regions for episode plans.

(a) This section continues the classification system for episode plans. Each region is classified separately with respect to each of the following pollutants: Sulfur oxides, particulate matter, carbon monoxide, nitrogen dioxide, and ozone.

(b) *Priority I Regions* means any area with greater ambient concentrations than the following:

(1) Sulfur dioxide—100 μg/m³ (0.04 ppm) annual arithmetic mean; 455 μg/m³ (0.17 ppm) 24-hour maximum.

(2) Particulate matter—95 μg/m³ annual geometric mean; 325 μg/m³ 24-hour maximum.

(3) Carbon monoxide—55 mg/m³ (48 ppm) 1-hour maximum; 14 mg/m³ (12 ppm) 8-hour maximum.

(4) Nitrogen dioxide—100 μg/m³ (0.06 ppm) annual arithmetic mean.

(5) Ozone—195 μg/m³ (0.10 ppm) 1-hour maximum.

(c) *Priority IA Region* means any area which is Priority I primarily because of emissions from a single point source.

(d) *Priority II Region* means any area which is not a Priority I region and has ambient concentrations between the following:

(1) Sulfur Dioxides—60–100 μg/m³ (0.02–0.04 ppm) annual arithmetic mean; 260–445 μg/m³ (0.10–0.17 ppm) 24-hour maximum; any concentration above 1,300 μg/m³ (0.50 ppm) three-hour average.

(2) Particulate matter—60–95 μg/m³ annual geometric mean; 150–325 μg/m³ 24-hour maximum.

(e) In the absence of adequate monitoring data, appropriate models must be used to classify an area under paragraph (b) of this section, consistent with the requirements contained in §51.112(a).

(f) Areas which do not meet the above criteria are classified Priority III.

[51 FR 40668, Nov. 7, 1986, as amended at 58 FR 38822, July 20, 1993]

§51.151 Significant harm levels.

Each plan for a Priority I region must include a contingency plan which must, as a mimimum, provide for taking action necessary to prevent ambient pollutant concentrations at any location in such region from reaching the following levels:

Sulfur dioxide—2.620 μg/m³ (1.0 ppm) 24-hour average.

PM_{10}—600 micrograms/cubic meter; 24-hour average.

Carbon monoxide—57.5 mg/m³ (50 ppm) 8-hour average; 86.3 mg/m³ (75 ppm) 4-hour average; 144 mg/m³ (125 ppm) 1-hour average.

Ozone—1,200 ug/m³ (0.6 ppm) 2-hour average.

Nitrogen dioxide—3.750 ug/m³ (2.0 ppm) 1-hour average; 938 ug/m³ (0.5 ppm) 24-hour average.

[51 FR 40668, Nov. 7, 1986, as amended at 52 FR 24713, July 1, 1987]

§51.152 Contingency plans.

(a) Each contingency plan must—

(1) Specify two or more stages of episode criteria such as those set forth in appendix L to this part, or their equivalent;

(2) Provide for public announcement whenever any episode stage has been determined to exist; and

(3) Specify adequate emission control actions to be taken at each episode stage. (Examples of emission control actions are set forth in appendix L.)

(b) Each contingency plan for a Priority I region must provide for the following:

(1) Prompt acquisition of forecasts of atmospheric stagnation conditions and of updates of such forecasts as frequently as they are issued by the National Weather Service.

(2) Inspection of sources to ascertain compliance with applicable emission control action requirements.

(3) Communications procedures for transmitting status reports and orders as to emission control actions to be taken during an episode stage, including procedures for contact with public officials, major emission sources, public health, safety, and emergency agencies and news media.

(c) Each plan for a Priority IA and II region must include a contingency plan that meets, as a minimum, the requirements of paragraphs (b)(1) and (b)(2) of

this section. Areas classified Priority III do not need to develop episode plans.

(d) Notwithstanding the requirements of paragraphs (b) and (c) of this section, the Administrator may, at his discretion—

(1) Exempt from the requirements of this section those portions of Priority I, IA, or II regions which have been designated as attainment or unclassifiable for national primary and secondary standards under section 107 of the Act; or

(2) Limit the requirements pertaining to emission control actions in Priority I regions to—

(i) Urbanized areas as identified in the most recent United States Census, and

(ii) Major emitting facilities, as defined by section 169(1) of the Act, outside the urbanized areas.

§ 51.153 Reevaluation of episode plans.

(a) States should periodically reevaluate priority classifications of all Regions or portion of Regions within their borders. The reevaluation must consider the three most recent years of air quality data. If the evaluation indicates a change to a higher priority classification, appropriate changes in the episode plan must be made as expeditiously as practicable.

(b) [Reserved]

Subpart I—Review of New Sources and Modifications

SOURCE: 51 FR 40669, Nov. 7, 1986, unless otherwise noted.

§ 51.160 Legally enforceable procedures.

(a) Each plan must set forth legally enforceable procedures that enable the State or local agency to determine whether the construction or modification of a facility, building, structure or installation, or combination of these will result in—

(1) A violation of applicable portions of the control strategy; or

(2) Interference with attainment or maintenance of a national standard in the State in which the proposed source (or modification) is located or in a neighboring State.

(b) Such procedures must include means by which the State or local agency responsible for final decision-making on an application for approval to construct or modify will prevent such construction or modification if—

(1) It will result in a violation of applicable portions of the control strategy; or

(2) It will interfere with the attainment or maintenance of a national standard.

(c) The procedures must provide for the submission, by the owner or operator of the building, facility, structure, or installation to be constructed or modified, of such information on—

(1) The nature and amounts of emissions to be emitted by it or emitted by associated mobile sources;

(2) The location, design, construction, and operation of such facility, building, structure, or installation as may be necessary to permit the State or local agency to make the determination referred to in paragraph (a) of this section.

(d) The procedures must provide that approval of any construction or modification must not affect the responsibility to the owner or operator to comply with applicable portions of the control strategy.

(e) The procedures must identify types and sizes of facilities, buildings, structures, or installations which will be subject to review under this section. The plan must discuss the basis for determining which facilities will be subject to review.

(f) The procedures must discuss the air quality data and the dispersion or other air quality modeling used to meet the requirements of this subpart.

(1) All applications of air quality modeling involved in this subpart shall be based on the applicable models, data bases, and other requirements specified in the appendix W of this part (''Guideline on Air Quality Models (Revised)'' (1986), supplement A (1987), supplement B (1993) and supplement C (1995)). The Guideline and its supplements (EPA Publication No. 450/2–78–027R) are also for sale from the U.S. Department of Commerce, National Technical Information Service, 5825 Port Royal Road, Springfield, VA, 22161.

(2) Where an air quality model specified in the appendix W of this part (''Guideline on Air Quality Models (Revised)'' (1986), supplement A (1987), supplement B (1993) and supplement C (1995)) is inappropriate, the model may be modified or another model substituted. Such a modification or substitution of a model may be made on a case-by-case basis or, where appropriate, on a generic basis for a specific state program. Written approval of the Administrator must be obtained for any modification or substitution. In addition, use of a modified or substituted model must be subject to notice and opportunity for public comment under procedures set forth in §51.102.

[51 FR 40669, Nov. 7, 1986, as amended at 58 FR 38822, July 20, 1993; 60 FR 40468, Aug. 9, 1995]

§51.161 Public availability of information.

(a) The legally enforceable procedures in §51.160 must also require the State or local agency to provide opportunity for public comment on information submitted by owners and operators. The public information must include the agency's analysis of the effect of construction or modification on ambient air quality, including the agency's proposed approval or disapproval.

(b) For purposes of paragraph (a) of this section, opportunity for public comment shall include, as a minimum—

(1) Availability for public inspection in at least one location in the area affected of the information submitted by the owner or operator and of the State or local agency's analysis of the effect on air quality;

(2) A 30-day period for submittal of public comment; and

(3) A notice by prominent advertisement in the area affected of the location of the source information and analysis specified in paragraph (b)(1) of this section.

(c) Where the 30-day comment period required in paragraph (b) of this section would conflict with existing requirements for acting on requests for permission to construct or modify, the State may submit for approval a comment period which is consistent with such existing requirements.

(d) A copy of the notice required by paragraph (b) of this section must also be sent to the Administrator through the appropriate Regional Office, and to all other State and local air pollution control agencies having jurisdiction in the region in which such new or modified installation will be located. The notice also must be sent to any other agency in the region having responsibility for implementing the procedures required under this subpart. For lead, a copy of the notice is required for all point sources. The definition of point for lead is given in §51.100(k)(2).

§51.162 Identification of responsible agency.

Each plan must identify the State or local agency which will be responsible for meeting the requirements of this subpart in each area of the State. Where such responsibility rests with an agency other than an air pollution control agency, such agency will consult with the appropriate State or local air pollution control agency in carrying out the provisions of this subpart

§51.163 Administrative procedures.

The plan must include the administrative procedures, which will be followed in making the determination specified in paragraph (a) of §51.160.

§51.164 Stack height procedures.

Such procedures must provide that the degree of emission limitation required of any source for control of any air pollutant must not be affected by so much of any source's stack height that exceeds good engineering practice or by any other dispersion technique, except as provided in §51.118(b). Such procedures must provide that before a State issues a permit to a source based on a good engineering practice stack height that exceeds the height allowed by §51.100(ii) (1) or (2), the State must notify the public of the availability of the demonstration study and must provide opportunity for public hearing on it. This section does not require such procedures to restrict in any manner the actual stack height of any source.

§ 51.165 Permit requirements.

(a) State Implementation Plan provisions satisfying sections 172(b)(6) and 173 of the Act shall meet the following conditions:

(1) All such plans shall use the specific definitions. Deviations from the following wording will be approved only if the state specifically demonstrates that the submitted definition is more stringent, or at least as stringent, in all respects as the corresponding definition below:

(i) *Stationary source* means any building, structure, facility, or installation which emits or may emit any air pollutant subject to regulation under the Act.

(ii) *Building, structure, facility, or installation* means all of the pollutant-emitting activities which belong to the same industrial grouping, are located on one or more contiguous or adjacent properties, and are under the control of the same person (or persons under common control) except the activities of any vessel. Pollutant-emitting activities shall be considered as part of the same industrial grouping if they belong to the same *Major Group* (i.e., which have the same two-digit code) as described in the *Standard Industrial Classification Manual, 1972,* as amended by the 1977 Supplement (U.S. Government Printing Office stock numbers 4101–0065 and 003–005–00176–0, respectively).

(iii) *Potential to emit* means the maximum capacity of a stationary source to emit a pollutant under its physical and operational design. Any physical or operational limitation on the capacity of the source to emit a pollutant, including air pollution control equipment and restrictions on hours of operation or on the type or amount of material combusted, stored, or processed, shall be treated as part of its design only if the limitation or the effect it would have on emissions is federally enforceable. Secondary emissions do not count in determining the potential to emit of a stationary source.

(iv)(A) *Major stationary source* means:

(*1*) Any stationary source of air pollutants which emits, or has the potential to emit 100 tons per year or more of any pollutant subject to regulation under the Act, or

(*2*) Any physical change that would occur at a stationary source not qualifying under paragraph (a)(1)(iv)(A)(*1*) as a major stationary source, if the change would constitute a major stationary source by itself.

(B) A major stationary source that is major for volatile organic compounds shall be considered major for ozone

(C) The fugitive emissions of a stationary source shall not be included in determining for any of the purposes of this paragraph whether it is a major stationary source, unless the source belongs to one of the following categories of stationary sources:

(*1*) Coal cleaning plants (with thermal dryers);

(*2*) Kraft pulp mills;

(*3*) Portland cement plants;

(*4*) Primary zinc smelters;

(*5*) Iron and steel mills;

(*6*) Primary aluminum ore reduction plants;

(*7*) Primary copper smelters;

(*8*) Municipal incinerators capable of charging more than 250 tons of refuse per day;

(*9*) Hydrofluoric, sulfuric, or nitric acid plants;

(*10*) Petroleum refineries;

(*11*) Lime plants;

(*12*) Phosphate rock processing plants;

(*13*) Coke oven batteries;

(*14*) Sulfur recovery plants;

(*15*) Carbon black plants (furnace process);

(*16*) Primary lead smelters;

(*17*) Fuel conversion plants;

(*18*) Sintering plants;

(*19*) Secondary metal production plants;

(*20*) Chemical process plants;

(*21*) Fossil-fuel boilers (or combination thereof) totaling more than 250 million British thermal units per hour heat input;

(*22*) Petroleum storage and transfer units with a total storage capacity exceeding 300,000 barrels;

(*23*) Taconite ore processing plants;

(*24*) Glass fiber processing plants;

(*25*) Charcoal production plants;

(*26*) Fossil fuel-fired steam electric plants of more than 250 million British thermal units per hour heat input; and

(*27*) Any other stationary source category which, as of August 7, 1980, is

being regulated under section 111 or 112 of the Act.

(v)(A) *Major modification* means any physical change in or change in the method of operation of a major stationary source that would result in a significant net emissions increase of any pollutant subject to regulation under the Act.

(B) Any net emissions increase that is considered significant for volatile organic compounds shall be considered significant for ozone.

(C) A physical change or change in the method of operation shall not include:

(*1*) Routine maintenance, repair and replacement;

(*2*) Use of an alternative fuel or raw material by reason of an order under sections 2 (a) and (b) of the Energy Supply and Environmental Coordination Act of 1974 (or any superseding legislation) or by reason of a natural gas curtailment plan pursuant to the Federal Power Act;

(*3*) Use of an alternative fuel by reason of an order or rule section 125 of the Act;

(*4*) Use of an alternative fuel at a steam generating unit to the extent that the fuel is generated from municipal solid waste;

(*5*) Use of an alternative fuel or raw material by a stationary source which;

(*i*) The source was capable of accommodating before December 21, 1976, unless such change would be prohibited under any federally enforceable permit condition which was established after December 12, 1976 pursuant to 40 CFR 52.21 or under regulations approved pursuant to 40 CFR subpart I or § 51.166, or

(*ii*) The source is approved to use under any permit issued under regulations approved pursuant to this section;

(*6*) An increase in the hours of operation or in the production rate, unless such change is prohibited under any federally enforceable permit condition which was established after December 21, 1976 pursuant to 40 CFR 52.21 or regulations approved pursuant to 40 CFR part 51 subpart I or 40 CFR 51.166.

(*7*) Any change in ownership at a stationary source.

(*8*) The addition, replacement or use of a pollution control project at an existing electric utility steam generating unit, unless the reviewing authority determines that such addition, replacement, or use renders the unit less environmentally beneficial, or except:

(*i*) When the reviewing authority has reason to believe that the pollution control project would result in a significant net increase in representative actual annual emissions of any criteria pollutant over levels used for that source in the most recent air quality impact analysis in the area conducted for the purpose of title I, if any, and

(*ii*) The reviewing authority determines that the increase will cause or contribute to a violation of any national ambient air quality standard or PSD increment, or visibility limitation.

(*9*) The installation, operation, cessation, or removal of a temporary clean coal technology demonstration project, provided that the project complies with:

(*i*) The State Implementation Plan for the State in which the project is located, and

(*ii*) Other requirements necessary to attain and maintain the national ambient air quality standard during the project and after it is terminated.

(vi)(A) *Net emissions increase* means the amount by which the sum of the following exceeds zero:

(*1*) Any increase in actual emissions from a particular physical change or change in the method of operation at a stationary source; and

(*2*) Any other increases and decreases in actual emissions at the source that are contemporaneous with the particular change and are otherwise creditable.

(B) An increase or decrease in actual emissions is contemporaneous with the increase from the particular change only if it occurs before the date that the increase from the particular change occurs;

(C) An increase or decrease in actual emissions is creditable only if:

(*1*) It occurs within a reasonable period to be specified by the reviewing authority; and

(*2*) The reviewing authority has not relied on it in issuing a permit for the

source under regulations approved pursuant to this section which permit is in effect when the increase in actual emissions from the particular change occurs.

(D) An increase in actual emissions is creditable only to the extent that the new level of actual emissions exceeds the old level.

(E) A decrease in actual emissions is creditable only to the extent that:

(*1*) The old level of actual emission or the old level of allowable emissions whichever is lower, exceeds the new level of actual emissions;

(*2*) It is federally enforceable at and after the time that actual construction on the particular change begins; and

(*3*) The reviewing authority has not relied on it in issuing any permit under regulations approved pursuant to 40 CFR part 51 subpart I or the state has not relied on it in demonstrating attainment or reasonable further progress;

(*4*) It has approximately the same qualitative significance for public health and welfare as that attributed to the increase from the particular change.

(F) An increase that results from a physical change at a source occurs when the emissions unit on which construction occurred becomes operational and begins to emit a particular pollutant. Any replacement unit that requires shakedown becomes operational only after a reasonable shakedown period, not to exceed 180 days.

(vii) *Emissions unit* means any part of a stationary source which emits or would have the potential to emit any pollutant subject to regulation under the the Act.

(viii) *Secondary emissons* means emissions which would occur as a result of the construction or operation of a major stationary source or major modification, but do not come from the major stationary source or major modification itself. For the purpose of this section, secondary emissions must be specific, well defined, quantifiable, and impact the same general area as the stationary source or modification which causes the secondary emissions. Secondary emissions include emissions from any offsite support facility which would not be constructed or increase its emissions except as a result of the construction of operation of the major stationary source of major modification. Secondary emissions do not include any emissions which come directly from a mobile source such as emissions from the tailpipe of a motor vehicle, from a train, or from a vessel.

(ix) *Fugitive emissions* means those emissions which could not reasonably pass through a stack, chimney, vent or other functionally equivalent opening.

(x) *Significant* means, in reference to a net emissions increase pr the potential of a source to emit any of the following pollutions, as rate of emissions that would equal or exceed any of the following rates:

Pollutant Emission Rate
Carbon monoxide: 100 tons per year (tpy)
Nitrogen oxides: 40 tpy
Sulfur dioxide: 40 tpy
Ozone: 40 tpy of volatile organic compounds
Lead: 0.6 tpy

(xi) *Allowable emissions* means the emissions rate of a stationary source calculated using the maximum rated capacity of the source (unless the source is subject to federally enforceable limits which restrict the operating rate, or hours of operation, or both) and the most stringent of the following:

(A) The applicable standards set forth in 40 CFR part 60 or 61;

(B) Any applicable State Implementation Plan emissions limitation including those with a future compliance date; or

(C) The emissions rate specified as a federally enforceable permit condition, including those with a future compliance date.

(xii)(A) *Actual emissions* means the actual rate of emissions of a pollutant from an emissions unit as determined in accordance with paragraphs (a)(1)(xii) (B) through (D) of this section.

(B) In general, actual emissions as of a particular date shall equal the average rate, in tons per year, at which the unit actually emitted the pollutant during a two-year period which precedes the particular date and which is representative of normal source operation. The reviewing authority shall allow the use of a different time period

upon a determination that it is more representative of normal source operation. Actual emissions shall be calculated using the unit's actual operating hours, production rates, and types of materials processed, stored, or combusted during the selected time period.

(C) The reviewing authority may presume that the source-specific allowable emissions for the unit are equivalent to the actual emissions of the unit.

(D) For any emissions unit (other than an electric utility steam generating unit specified in paragraph (a)(1)(xii)(E) of this section) which has not begun normal operations on the particular date, actual emissions shall equal the potential to emit of the unit on that date.

(E) For an electric utility steam generating unit (other than a new unit or the replacement of an existing unit) actual emissions of the unit following the physical or operational change shall equal the representative actual annual emissions of the unit, provided the source owner or operator maintains and submits to the reviewing authority, on an annual basis for a period of 5 years from the date the unit resumes regular operation, information demonstrating that the physical or operational change did not result in an emissions increase. A longer period, not to exceed 10 years, may be required by the reviewing authority if it determines such a period to be more representative of normal source post-change operations.

(xiii) *Lowest achievable emission rate* means, for any source, the more stringent rate of emissions based on the following:

(A) The most stringent emissions limitation which is contained in the implementation plan of any State for such class or category of stationary source, unless the owner or operator of the proposed stationary source demonstrates that such limitations are not achievable; or

(B) The most stringent emissions limitation which is achieved in practice by such class or category of stationary sources. This limitation, when applied to a modification, means the lowest achievable emissions rate for the new or modified emissions units within or stationary source. In no event shall the application of the term permit a proposed new or modified stationary source to emit any pollutant in excess of the amount allowable under an applicable new source standard of performance.

(xiv) *Federally enforceable* means all limitations and conditions which are enforceable by the Administrator, including those requirements developed pursuant to 40 CFR parts 60 and 61, requirements within any applicable State implementation plan, any permit requirements established pursuant to 40 CFR 52.21 or under regulations approved pursuant to 40 CFR part 51, subpart I, including operating permits issued under an EPA-approved program that is incorporated into the State implementation plan and expressly requires adherence to any permit issued under such program.

(xv) *Begin actual construction* means in general, initiation of physical on-site construction activities on an emissions unit which are of a permanent nature. Such activities include, but are not limited to, installation of building supports and foundations, laying of underground pipework, and construction of permanent storage structures. With respect to a change in method of operating this term refers to those on-site activities other than preparatory activities which mark the initiation of the change.

(xvi) *Commence* as applied to construction of a major stationary source or major modification means that the owner or operator has all necessary preconstruction approvals or permits and either has:

(A) Begun, or caused to begin, a continuous program of actual on-site construction of the source, to be completed within a reasonable time; or

(B) Entered into binding agreements or contractual obligations, which cannot be canceled or modified without substantial loss to the owner or operator, to undertake a program of actual construction of the source to be completed within a reasonable time.

(xvii) *Necessary preconstruction approvals or permits* means those Federal air quality control laws and regulations and those air quality control laws and regulations which are part of the applicable State Implementation Plan.

(xviii) *Construction* means any physical change or change in the method of operation (including fabrication, erection, installation, demolition, or modification of an emissions unit) which would result in a change in actual emissions.

(xix) *Volatile organic compounds (VOC)* is as defined in § 51.100(s) of this part.

(xx) *Electric utility steam generating unit* means any steam electric generating unit that is constructed for the purpose of supplying more than one-third of its potential electric output capacity and more than 25 MW electrical output to any utility power distribution system for sale. Any steam supplied to a steam distribution system for the purpose of providing steam to a steam-electric generator that would produce electrical energy for sale is also considered in determining the electrical energy output capacity of the affected facility.

(xxi) *Representative actual annual emissions* means the average rate, in tons per year, at which the source is projected to emit a pollutant for the two-year period after a physical change or change in the method of operation of a unit, (or a different consecutive two-year period within 10 years after that change, where the reviewing authority determines that such period is more representative of source operations), considering the effect any such change will have on increasing or decreasing the hourly emissions rate and on projected capacity utilization. In projecting future emissions the reviewing authority shall:

(A) Consider all relevant information, including but not limited to, historical operational data, the company's own representations, filings with the State or Federal regulatory authorities, and compliance plans under title IV of the Clean Air Act; and

(B) Exclude, in calculating any increase in emissions that results from the particular physical change or change in the method of operation at an electric utility steam generating unit, that portion of the unit's emissions following the change that could have been accommodated during the representative baseline period and is attributable to an increase in projected capacity utilization at the unit that is unrelated to the particular change, including any increased utilization due to the rate of electricity demand growth for the utility system as a whole.

(xxii) *Temporary clean coal technology demonstration project* means a clean coal technology demonstration project that is operated for a period of 5 years or less, and which complies with the State Implementation Plan for the State in which the project is located and other requirements necessary to attain and maintain the national ambient air quality standards during the project and after it is terminated.

(xxiii) *Clean coal technology* means any technology, including technologies applied at the precombustion, combustion, or post combustion stage, at a new or existing facility which will achieve significant reductions in air emissions of sulfur dioxide or oxides of nitrogen associated with the utilization of coal in the generation of electricity, or process steam which was not in widespread use as of November 15, 1990.

(xxiv) *Clean coal technology demonstration project* means a project using funds appropriated under the heading ''Department of Energy-Clean Coal Technology,'' up to a total amount of $2,500,000,000 for commercial demonstration of clean coal technology, or similar projects funded through appropriations for the Environmental Protection Agency. The Federal contribution for a qualifying project shall be at least 20 percent of the total cost of the demonstration project.

(xxv) *Pollution control project* means any activity or project at an existing electric utility steam generating unit for purposes of reducing emissions from such unit. Such activities or projects are limited to:

(A) The installation of conventional or innovative pollution control technology, including but not limited to advanced flue gas desulfurization, sorbent injection for sulfur dioxide and nitrogen oxides controls and electrostatic precipitators;

(B) An activity or project to accommodate switching to a fuel which is less polluting than the fuel used prior to the activity or project, including, but not limited to natural gas or coal

reburning, or the cofiring of natural gas and other fuels for the purpose of controlling emissions;

(C) A permanent clean coal technology demonstration project conducted under title II, sec. 101(d) of the Further Continuing Appropriations Act of 1985 (sec. 5903(d) of title 42 of the United States Code), or subsequent appropriations, up to a total amount of $2,500,000,000 for commercial demonstration of clean coal technology, or similar projects funded through appropriations for the Environmental Protection Agency; or

(D) A permanent clean coal technology demonstration project that constitutes a repowering project.

(2) Each plan shall adopt a preconstruction review program to satisfy the requirements of sections 172(b)(6) and 173 of the Act for any area designated nonattainment for any national ambient air quality standard under 40 CFR 81.300 *et seq.* Such a program shall apply to any new major stationary source or major modification that is major for the pollutant for which the area is designated nonattainment, if the stationary source or modification would locate anywhere in the designated nonattainment area.

(3)(i) Each plan shall provide that for sources and modifications subject to any preconstruction review program adopted pursuant to this subsection the baseline for determining credit for emissions reductions is the emissions limit under the applicable State Implementation Plan in effect at the time the application to construct is filed, except that the offset baseline shall be the actual emissions of the source from which offset credit is obtained where;

(A) The demonstration of reasonable further progress and attainment of ambient air quality standards is based upon the actual emissions of sources located within a designated nonattainment area for which the preconstruction review program was adopted; or

(B) The applicable State Implementation Plan does not contain an emissions limitation for that source or source category.

(ii) The plan shall further provide that:

(A) Where the emissions limit under the applicable State Implementation Plan allows greater emissions than the potential to emit of the source, emissions offset credit will be allowed only for control below this potential;

(B) For an existing fuel combustion source, credit shall be based on the allowable emissions under the applicable State Implementation Plan for the type of fuel being burned at the time the application to construct is filed. If the existing source commits to switch to a cleaner fuel at some future date, emissions offset credit based on the allowable (or actual) emissions for the fuels involved is not acceptable, unless the permit is conditioned to require the use of a specified alternative control measure which would achieve the same degree of emissions reduction should the source switch back to a dirtier fuel at some later date. The reviewing authority should ensure that adequate long-term supplies of the new fuel are available before granting emissions offset credit for fuel switches,

(C)(*1*) Emissions reductions achieved by shutting down an existing source or curtailing production or operating hours below baseline levels may be generally credited if such reductions are permanent, quantifiable, and federally enforceable, and if the area has an EPA-approved attainment plan. In addition, the shutdown or curtailment is creditable only if it occurred on or after the date specified for this purpose in the plan, and if such date is on or after the date of the most recent emissions inventory used in the plan's demonstration of attainment. Where the plan does not specify a cutoff date for shutdown credits, the date of the most recent emissions inventory or attainment demonstration, as the case may be, shall apply. However, in no event may credit be given for shutdowns which occurred prior to August 7, 1977. For purposes of this paragraph, a permitting authority may choose to consider a prior shutdown or curtailment to have occurred after the date of its most recent emissions inventory, if the inventory explicitly includes as current *existing* emissions the emissions from such previously shutdown or curtailed sources.

(*2*) Such reductions may be credited in the absence of an approved attainment demonstration only if the shutdown or curtailment occurred on or after the date the new source permit application is filed, or, if the applicant can establish that the proposed new source is a replacement for the shutdown or curtailed source, and the cutoff date provisions of § 51.165(a)(3)(ii)(C)(*1*) are observed.

(D) No emissions credit may be allowed for replacing one hydrocarbon compound with another of lesser reactivity, except for those compounds listed in Table 1 of EPA's ''Recommended Policy on Control of Volatile Organic Compounds'' (42 FR 35314, July 8, 1977; (This document is also available from Mr. Ted Creekmore, Office of Air Quality Planning and Standards, (MD–15) Research Triangle Park, NC 27711.))

(E) All emission reductions claimed as offset credit shall be federally enforceable;

(F) Procedures relating to the permissible location of offsetting emissions shall be followed which are at least as stringent as those set out in 40 CFR part 51 appendix S section IV.D.

(G) Credit for an emissions reduction can be claimed to the extent that the reviewing authority has not relied on it in issuing any permit under regulations approved pursuant to 40 CFR part 51 subpart I or the State has not relied on it in demonstration attainment or reasonable further progress.

(4) Each plan may provide that the provisions of this paragraph do not apply to a source or modification that would be a major stationary source or major modification only if fugitive emission to the extent quantifiable are considered in calculating the potential to emit of the stationary source or modification and the source does not belong to any of the following categories:

(i) Coal cleaning plants (with thermal dryers);

(ii) Kraft pulp mills;

(iii) Portland cement plants;

(iv) Primary zinc smelters;

(v) Iron and steel mills;

(vi) Primary aluminum ore reduction plants;

(vii) Primary copper smelters;

(viii) Municipal incinerators capable of charging more than 250 tons of refuse per day;

(ix) Hydrofluoric, sulfuric, or citric acid plants;

(x) Petroleum refineries;

(xi) Lime plants;

(xii) Phosphate rock processing plants;

(xiii) Coke oven batteries;

(xiv) Sulfur recovery plants;

(xv) Carbon black plants (furnace process);

(xvi) Primary lead smelters;

(xvii) Fuel conversion plants;

(xviii) Sintering plants;

(xix) Secondary metal production plants;

(xx) Chemical process plants;

(xxi) Fossil-fuel boilers (or combination thereof) totaling more than 250 million British thermal units per hour heat input;

(xxii) Petroleum storage and transfer units with a total storage capacity exceeding 300,000 barrels;

(xxiii) Taconite ore processing plants;

(xxiv) Glass fiber processing plants;

(xxv) Charcoal production plants;

(xxvi) Fossil fuel-fired steam electric plants of more than 250 million British thermal units per hour heat input;

(xxvii) Any other stationary source category which, as of August 7, 1980, is being regulated under section 111 or 112 of the Act.

(5) Each plan shall include enforceable procedures to provide that:

(i) Approval to construct shall not relieve any owner or operator of the responsibility to comply fully with applicable provision of the plan and any other requirements under local, State or Federal law.

(ii) At such time that a particular source or modification becomes a major stationary source or major modification solely by virtue of a relaxation in any enforcement limitation which was established after August 7, 1980, on the capacity of the source or modification otherwise to emit a pollutant, such as a restriction on hours of operation, then the requirements of regulations approved pursuant to this section shall apply to the source or modification as though construction

had not yet commenced on the source or modification;

(b)(1) Each plan shall include a preconstruction review permit program or its equivalent to satisfy the requirements of section 110(a)(2)(D)(i) of the Act for any new major stationary source or major modification as defined in paragraphs (a)(1) (iv) and (v) of this section. Such a program shall apply to any such source or modification that would locate in any area designated as attainment or unclassifiable for any national ambient air quality standard pursuant to section 107 of the Act, when it would cause or contribute to a violation of any national ambient air quality standard.

(2) A major source or major modification will be considered to cause or contribute to a violation of a national ambient air quality standard when such source or modification would, at a minimum, exceed the following significance levels at any locality that does not or would not meet the applicable national standard:

	Annual	Averaging time (hours)			
		24	8	3	1
Pollutant					
SO_2	1.0 µg/m³	5 µg/m³		25 µg/m³	
PM_{10}	1.0 µg/m³	5 µg/m³			
NO_2	1.0 µg/m³				
CO			0.5 mg/m³		2 mg/m³

(3) Such a program may include a provision which allows a proposed major source or major modification subject to paragraph (b) of this section to reduce the impact of its emissions upon air quality by obtaining sufficient emission reductions to, at a minimum, compensate for its adverse ambient impact where the major source or major modification would otherwise cause or contribute to a violation of any national ambient air quality standard. The plan shall require that, in the absence of such emission reductions, the State or local agency shall deny the proposed construction.

(4) The requirements of paragraph (b) of this section shall not apply to a major stationary source or major modification with respect to a particular pollutant if the owner or operator demonstrates that, as to that pollutant, the source or modification is located in an area designated as nonattainment pursuant to section 107 of the Act.

[51 FR 40669, Nov. 7, 1986, as amended at 52 FR 24713, July 1, 1987; 52 FR 29386, Aug 7, 1987; 54 FR 27285, 27299 June 28, 1989; 57 FR 3946, Feb. 3, 1992; 57 FR 32334, July 21, 1992]

§ 51.166 Prevention of significant deterioration of air quality.

(a)(1) *Plan requirements.* In accordance with the policy of section 101(b)(1) of the act and the purposes of section 160 of the Act, each applicable State implementation plan shall contain emission limitations and such other measures as may be necessary to prevent significant deterioration of air quality.

(2) *Plan revisions.* If a State Implementation Plan revision would result in increased air quality deterioration over any baseline concentration, the plan revision shall include a demonstration that it will not cause or contribute to a violation of the applicable increment(s). If a plan revision proposing less restrictive requirements was submitted after August 7, 1977 but on or before any applicable baseline date and was pending action by the Administrator on that date, no such demonstration is necessary with respect to the area for which a baseline date would be established before final action is taken on the plan revision. Instead, the assessment described in paragraph (a)(4) of this section, shall review the expected impact to the applicable increment(s).

(3) *Required plan revision.* If the State or the Administrator determines that a plan is substantially inadequate to prevent significant deterioration or that an applicable increment is being violated, the plan shall be revised to correct the inadequacy or the violation. The plan shall be revised within 60 days

of such a finding by a State or within 60 days following notification by the Administrator, or by such later date as prescribed by the Administrator after consultation with the State.

(4) *Plan assessment.* The State shall review the adequacy of a plan on a periodic basis and within 60 days of such time as information becomes available that an applicable increment is being violated.

(5) *Public participation.* Any State action taken under this paragraph shall be subject to the opportunity for public hearing in accordance with procedures equivalent to those established in § 51.102.

(6) *Amendments.* (i) Any State required to revise its implementation plan by reason of an amendment to this section, including any amendment adopted simultaneously with this paragraph, shall adopt and submit such plan revision to the Administrator for approval within 9 months after the effective date of the new amendments.

(ii) Any revision to an implementation plan that would amend the provisions for the prevention of significant air quality deterioration in the plan shall specify when and as to what sources and modifications the revision is to take effect.

(iii) Any revision to an implementation plan that an amendment to this section required shall take effect no later than the date of its approval and may operate prospectively.

(b) *Definitions.* All state plans shall use the following definitions for the purposes of this section. Deviations from the following wording will be approved only if the state specifically demonstrates that the submitted definition is more stringent, or at least as stringent, in all respects as the corresponding definitions below:

(1)(i) *Major stationary source* means:

(*a*) Any of the following stationary sources of air pollutants which emits, or has the potential to emit, 100 tons per year or more of any pollutant subject to regulation under the Act: Fossil fuel-fired steam electric plants of more than 250 million British thermal units per hour heat input, coal cleaning plants (with thermal dryers), kraft pulp mills, portland cement plants, primary zinc smelters, iron and steel mill plants, primary aluminum ore reduction plants, primary copper smelters, municipal incinerators capable of charging more than 250 tons of refuse per day, hydrofluoric, sulfuric, and nitric acid plants, petroleum refineries, lime plants, phosphate rock processing plants, coke oven batteries, sulfur recovery plants, carbon black plants (furnace process), primary lead smelters, fuel conversion plants, sintering plants, secondary metal production plants, chemical process plants, fossil fuel boilers (or combinations thereof) totaling more than 250 million British thermal units per hour heat input, petroleum storage and transfer units with a total storage capacity exceeding 300,000 barrels, taconite ore processing plants, glass fiber processing plants, and charcoal production plants;

(*b*) Notwithstanding the stationary source size specified in paragraph (b)(1)(i)(*a*) of this section, any stationary source which emits, or has the potential to emit, 250 tons per year or more of any air pollutant subject to regulation under the Act; or

(*c*) Any physical change that would occur at a stationary source not otherwise qualifying under paragraph (b)(1) of this section, as a major stationary source if the change would constitute a major stationary source by itself.

(ii) A major source that is major for volatile organic compounds shall be considered major for ozone.

(iii) The fugitive emissions of a stationary source shall not be included in determining for any of the purposes of this section whether it is a major stationary source, unless the source belongs to one of the following categories of stationary sources:

(*a*) Coal cleaning plants (with thermal dryers);

(*b*) Kraft pulp mills;

(*c*) Portland cement plants;

(*d*) Primary zinc smelters;

(*e*) Iron and steel mills;

(*f*) Primary aluminum ore reduction plants;

(*g*) Primary copper smelters;

(*h*) Municipal incinerators capable of charging more than 250 tons of refuse per day;

(*i*) Hydrofluoric, sulfuric, or nitric acid plants;

(*j*) Petroleum refineries;

(*k*) Lime plants;

(*l*) Phosphate rock processing plants;

(*m*) Coke oven batteries;

(*n*) Sulfur recovery plants;

(*o*) Carbon black plants (furnace process);

(*p*) Primary lead smelters;

(*q*) Fuel conversion plants;

(*r*) Sintering plants;

(*s*) Secondary metal production plants;

(*t*) Chemical process plants;

(*u*) Fossil-fuel boilers (or combination thereof) totaling more than 250 million British thermal units per hour heat input;

(*v*) Petroleum storage and transfer units with a total storage capacity exceeding 300,000 barrels;

(*w*) Taconite ore processing plants;

(*x*) Glass fiber processing plants;

(*y*) Charcoal production plants;

(*z*) Fossil fuel-fired steam electric plants of more that 250 million British thermal units per hour heat input;

(*aa*) Any other stationary source category which, as of August 7, 1980, is being regulated under section 111 or 112 of the Act.

(2)(i) *Major modification* means any physical change in or change in the method of operation of a major stationary source that would result in a significant net emissions increase of any pollutant subject to regulation under the Act.

(ii) Any net emissions increase that is significant for volatile organic compounds shall be considered significant for ozone.

(iii) A physical change or change in the method of operation shall not include:

(*a*) Routine maintenance, repair, and replacement;

(*b*) Use of an alternative fuel or raw material by reason of any order under section 2 (a) and (b) of the Energy Supply and Environmental Coordination Act of 1974 (or any superseding legislation) or by reason of a natural gas curtailment plan pursuant to the Federal Power Act;

(*c*) Use of an alternative fuel by reason of an order or rule under section 125 of the Act;

(*d*) Use of an alternative fuel at a steam generating unit to the extent that the fuel is generated from municipal solid waste;

(*e*) Use of an alternative fuel or raw material by a stationary source which:

(*1*) The source was capable of accommodating before January 6, 1975, unless such change would be prohibited under any federally enforceable permit condition which was established after January 6, 1975 pursuant to 40 CFR 52.21 or under regulations approved pursuant to 40 CFR subpart I or § 51.166; or

(*2*) The source is approved to use under any permit issued under 40 CFR 52.21 or under regulations approved pursuant to 40 CFR 51.166;

(*f*) An increase in the hours of operation or in the production rate, unless such change would be prohibited under any federally enforceable permit condition which was established after January 6, 1975, pursuant to 40 CFR 52.21 or under regulations approved pursuant to 40 CFR subpart I or § 51.166.

(*g*) Any change in ownership at a stationary source.

(*h*) The addition, replacement or use of a pollution control project at an existing electric utility steam generating unit, unless the Administrator determines that such addition, replacement, or use renders the unit less environmentally beneficial, or except:

(*1*) When the reviewing authority has reason to believe that the pollution control project would result in a significant net increase in representative actual annual emissions of any criteria pollutant over levels used for that source in the most recent air quality impact analysis in the area conducted for the purpose of title I, if any, and

(*2*) The reviewing authority determines that the increase will cause or contribute to a violation of any national ambient air quality standard or PSD increment, or visibility limitation.

(*i*) The installation, operation, cessation, or removal of a temporary clean coal technology demonstration project, provided that the project complies with:

(*1*) The State implementation plan for the State in which the project is located; and

(*2*) Other requirements necessary to attain and maintain the national ambient air quality standards during the project and after it is terminated.

(*j*) The installation or operation of a permanent clean coal technology demonstration project that constitutes repowering, provided that the project does not result in an increase in the potential to emit of any regulated pollutant emitted by the unit. This exemption shall apply on a pollutant-by-pollutant basis.

(*k*) The reactivation of a very clean coal-fired electric utility steam generating unit.

(3)(i) *Net emissions increase* means the amount by which the sum of the following exceeds zero:

(*a*) Any increase in actual emissions from a particular physical change or change in the method of operation at a stationary source; and

(*b*) Any other increases and decreases in actual emissions at the source that are contemporaneous with the particular change and are otherwise creditable.

(ii) An increase or decrease in actual emissions is contemporaneous with the increase from the particular change only if it occurs within a reasonable period (to be specified by the state) before the date that the increase from the particular change occurs.

(iii) An increase or decrease in actual emissions is creditable only if the reviewing authority has not relied on it in issuing a permit for the source under regulations approved pursuant to this section, which permit is in effect when the increase in actual emissions from the particular change occurs.

(iv) An increase or decrease in actual emissions of sulfur dioxide, particulate matter, or nitrogen oxides, which occurs before the applicable minor source baseline date is creditable only if it is required to be considered in calculating the amount of maximum allowable increases remaining available. With respect to particulate matter, only PM–10 emissions can be used to evaluate the net emissions increase for PM–10.

(v) An increase in actual emissions is creditable only to the extent that the new level of actual emissions exceeds the old level.

(vi) A decrease in actual emissions is creditable only to the extent that:

(*a*) The old level of actual emissions or the old level of allowable emissions, whichever is lower, exceeds the new level of actual emissions;

(*b*) It is federally enforceable at and after the time that actual construction on the particular change begins; and

(*c*) It has approximately the same qualitative significance for public health and welfare as that attributed to the increase from the particular change.

(vii) An increase that results from a physical change at a source occurs when the emissions unit on which construction occurred becomes operational and begins to emit a particular pollutant. Any replacement unit that requires shakedown becomes operational only after a reasonable shakedown period, not to exceed 180 days.

(4) *Potential to emit* means the maximum capacity of a stationary source to emit a pollutant under its physical and operational design. Any physical or operational limitation on the capacity of the source to emit a pollutant, including air pollution control equipment and restrictions on hours of operation or on the type or amount of material combusted, stored, or processed, shall be treated as part of its design if the limitation or the effect it would have on emissions is federally enforceable. Secondary emissions do not count in determining the potential to emit of a stationary source.

(5) *Stationary source* means any building, structure, facility, or installation which emits or may emit any air pollutant subject to regulation under the Act.

(6) *Building, structure, facility, or installation* means all of the pollutant-emitting activities which belong to the same industrial grouping, are located on one or more contiguous or adjacent properties, and are under the control of the same person (or persons under common control) except the activities of any vessel. Pollutant-emitting activities shall be considered as part of the same industrial grouping if they belong to the same *Major Group* (i.e., which have the same two-digit code) as described in the *Standard Industrial Classification Manual, 1972,* as amended by

the 1977 Supplement (U.S. Government Printing Office stock numbers 4101–0066 and 003–005–00176–0, respectively).

(7) *Emissions unit* means any part of a stationary source which emits or would have the potential to emit any pollutant subject to regulation under the Act.

(8) *Construction* means any physical change or change in the method of operation (including fabrication, erection, installation, demolition, or modification of an emissions unit) which would result in a change in actual emissions.

(9) *Commence* as applied to construction of a major stationary source or major modification means that the owner or operator has all necessary preconstruction approvals or permits and either has:

(i) Begun, or caused to begin, a continuous program of actual on-site construction of the source, to be completed within a reasonable time; or

(ii) Entered into binding agreements or contractual obligations, which cannot be cancelled or modified without substantial loss to the owner or operator, to undertake a program of actual construction of the source to be completed within a reasonable time.

(10) *Necessary preconstruction approvals or permits* means those permits or approvals required under federal air quality control laws and regulations and those air quality control laws and regulations which are part of the applicable State Implementation Plan.

(11) *Begin actual construction* means, in general, initiation of physical on-site construction activities on an emissions unit which are of a permanent nature. Such activities include, but are not limited to, installation of building supports and foundations, laying of underground pipework, and construction of permanent storage structures. With respect to a change in method of operation this term refers to those on-site activities, other than preparatory activities, which mark the initiation of the change.

(12) *Best available control technology* means an emissions limitation (including a visible emissions standard) based on the maximum degree of reduction for each pollutant subject to regulation under the Act which would be emitted from any proposed major stationary source or major modification which the reviewing authority, on a case-by-case basis, taking into account energy, environmental, and economic impacts and other costs, determines is achievable for such source or modification through application of production processes or available methods, systems, and techniques, including fuel cleaning or treatment or innovative fuel combination techniques for control of such pollutant. In no event shall application of best available control technology result in emissions of any pollutant which would exceed the emissions allowed by any applicable standard under 40 CFR parts 60 and 61. If the reviewing authority determines that technological or economic limitations on the application of measurement methodology to a particular emissions unit would make the imposition of an emissions standard infeasible, a design, equipment, work practice, operational standard or combination thereof, may be prescribed instead to satisfy the requirement for the application of best available control technology. Such standard shall, to the degree possible, set forth the emissions reduction achievable by implementation of such design, equipment, work practice or operation, and shall provide for compliance by means which achieve equivalent results.

(13)(i) *Baseline concentration* means that ambient concentration level which exists in the baseline area at the time of the applicable minor source baseline date. A baseline concentration is determined for each pollutant for which a minor source baseline date is established and shall include:

(*a*) The actual emissions representative of sources in existence on the applicable minor source baseline date, except as provided in paragraph (b)(13)(ii) of this section;

(*b*) The allowable emissions of major stationary sources which commenced construction before the major source baseline date, but were not in operation by the applicable minor source baseline date.

(ii) The following will not be included in the baseline concentration and will affect the applicable maximum allowable increase(s):

(*a*) Actual emissions from any major stationary source on which construction commenced after the major source baseline date; and

(*b*) Actual emissions increases and decreases at any stationary source occurring after the minor source baseline date.

(14)(i) *Major source baseline date* means:

(*a*) In the case of particulate matter and sulfur dioxide, January 6, 1975, and

(*b*) In the case of nitrogen dioxide, February 8, 1988.

(ii) *Minor source baseline date* means the earliest date after the trigger date on which a major stationary source or a major modification subject to 40 CFR 52.21 or to regulations approved pursuant to 40 CFR 51.166 submits a complete application under the relevant regulations. The trigger date is:

(*a*) In the case of particulate matter and sulfur dioxide, August 7, 1977, and

(*b*) In the case of nitrogen dioxide, February 8, 1988.

(iii) The baseline date is established for each pollutant for which increments or other equivalent measures have been established if:

(*a*) The area in which the proposed source or modification would construct is designated as attainment or unclassifiable under section 107(d)(i)(D) or (E) of the Act for the pollutant on the date of its complete application under 40 CFR 52.21 or under regulations approved pursuant to 40 CFR 51.166; and

(*b*) In the case of a major stationary source, the pollutant would be emitted in significant amounts, or, in the case of a major modification, there would be a significant net emissions increase of the pollutant.

(iv) Any minor source baseline date established originally for the TSP increments shall remain in effect and shall apply for purposes of determining the amount of available PM–10 increments, except that the reviewing authority may rescind any such minor source baseline date where it can be shown, to the satisfaction of the reviewing authority, that the emissions increase from the major stationary source, or the net emissions increase from the major modification, responsible for triggering that date did not result in a significant amount of PM–10 emissions.

(15)(i) *Baseline area* means any intrastate area (and every part thereof) designated as attainment or unclassifiable under section 107(d)(1) (D) or (E) of the Act in which the major source or major modification establishing the minor source baseline date would construct or would have an air quality impact equal to or greater than 1 $\mu g/m^3$ (annual average) of the pollutant for which the minor source baseline date is established.

(ii) Area redesignations under section 107(d)(1) (D) or (E) of the Act cannot intersect or be smaller than the area of impact of any major stationary source or major modification which:

(*a*) Establishes a minor source baseline date; or

(*b*) Is subject to 40 CFR 52.21 or under regulations approved pursuant to 40 CFR 51.166, and would be constructed in the same state as the state proposing the redesignation.

(iii) Any baseline area established originally for the TSP increments shall remain in effect and shall apply for purposes of determining the amount of available PM–10 increments, except that such baseline area shall not remain in effect if the permit authority rescinds the corresponding minor source baseline date in accordance with paragraph (b)(14)(iv) of this section.

(16) *Allowable emissions* means the emissions rate of a stationary source calculated using the maximum rated capacity of the source (unless the source is subject to federally enforceable limits which restrict the operating rate, or hours of operation, or both) and the most stringent of the following:

(i) The applicable standards as set forth in 40 CFR parts 60 and 61;

(ii) The applicable State Implementation Plan emissions limitation, including those with a future compliance date; or

(iii) The emissions rate specified as a federally enforceable permit condition.

(17) *Federally enforceable* means all limitations and conditions which are enforceable by the Administrator, including those requirements developed pursuant to 40 CFR parts 60 and 61, requirements within any applicable State

implementation plan, any permit requirements established pursuant to 40 CFR 52.21 or under regulations approved pursuant to 40 CFR part 51, subpart I, including operating permits issued under an EPA-approved program that is incorporated into the State implementation plan and expressly requires adherence to any permit issued under such program.

(18) *Secondary emissions* means emissions which occur as a result of the construction or operation of a major stationary source or major modification, but do not come from the major stationary source or major modification itself. For the purposes of this section, secondary emissions must be specific, well defined, quantifiable, and impact the same general areas the stationary source modification which causes the secondary emissions. Secondary emissions include emissions from any offsite support facility which would not be constructed or increase its emissions except as a result of the construction or operation of the major stationary source or major modification. Secondary emissions do not include any emissions which come directly from a mobile source, such as emissions from the tailpipe of a motor vehicle, from a train, or from a vessel.

(19) *Innovative control technology* means any system of air pollution control that has not been adequately demonstrated in practice, but would have a substantial likelihood of achieving greater continuous emissions reduction than any control system in current practice or of achieving at least comparable reductions at lower cost in terms of energy, economics, or nonair quality environmental impacts.

(20) *Fugitive emissions* means those emissions which could not reasonably pass through a stack, chimney, vent, or other functionally equivalent opening.

(21)(i) *Actual emissions* means the actual rate of emissions of a pollutant from an emissions unit, as determined in accordance with paragraphs (b)(21)(ii) through (iv) of this section.

(ii) In general, actual emissions as of a particular date shall equal the average rate, in tons per year, at which the unit actually emitted the pollutant during a two-year period which precedes the particular date and which is representative of normal source operation. The reviewing authority may allow the use of a different time period upon a determination that it is more representative of normal source operation. Actual emissions shall be calculated using the unit's actual operating hours, production rates, and types of materials processed, stored, or combusted during the selected time period.

(iii) The reviewing authority may presume that source-specific allowable emissions for the unit are equivalent to the actual emissions of the unit.

(iv) For any emissions unit (other than an electric utility steam generating unit specified in paragraph (b)(21)(v) of this section) which has not begun normal operations on the particular date, actual emissions shall equal the potential to emit of the unit on that date.

(v) For an electric utility steam generating unit (other than a new unit or the replacement of an existing unit) actual emissions of the unit following the physical or operational change shall equal the representative actual annual emissions of the unit following the physical or operational change, provided the source owner or operator maintains and submits to the reviewing authority, on an annual basis for a period of 5 years from the date the unit resumes regular operation, information demonstrating that the physical or operational change did not result in an emissions increase. A longer period, not to exceed 10 years, may be required by the reviewing authority if it determines such a period to be more representative of normal source post-change operations.

(22) *Complete* means, in reference to an application for a permit, that the application contains all the information necessary for processing the application. Designating an application complete for purposes of permit processing does not preclude the reviewing authority from requesting or accepting any additional information.

(23)(i) *Significant* means, in reference to a net emissions increase or the potential of a source to emit any of the following pollutants, a rate of emissions that would equal or exceed any of the following rates:

Pollutant and Emissions Rate

Carbon monoxide: 100 tons per year (tpy)
Nitrogen oxides: 40 tpy
Sulfur dioxide: 40 tpy
Particulate matter: 25 tpy of particulate matter emissions. 15 tpy of PM_{10} emissions.
Ozone: 40 tpy of volatile organic compounds
Lead: 0.6 tpy
Asbestos: 0.007 tpy
Beryllium: 0.0004 tpy
Mercury: 0.1 tpy
Vinyl chloride: 1 tpy
Fluorides: 3 tpy
Sulfuric acid mist: 7 tpy
Hydrogen sulfide (H_2S): 10 tpy
Total reduced sulfur (including H_2S): 10 tpy
Reduced sulfur compounds (including H_2S): 10 tpy
Municipal waste combustor organics (measured as total tetra- through octa-chlorinated dibenzo-p-dioxins and dibenzofurans): 3.2×10^{-6} megagrams per year (3.5×10^{-6} tons per year)
Municipal waste combustor metals (measured as articulate matter): 14 megagrams per year (15 tons per year) Municipal waste combustor acid gases (measured as sulfur dioxide and hydrogen chloride): 36 megagrams per year (40 tons per year)
Municipal solid waste landfill emissions (measured as nonmethane organic compounds): 45 megagrams per year (50 tons per year)

(ii) *Significant* means, in reference to a net emissions increase or the potential of a source to emit a pollutant subject to regulation under the Act that paragraph (b)(23)(i) of this section, does not list, any emissions rate.

(iii) Notwithstanding paragraph (b)(23)(i) of this section, *significant* means any emissions rate or any net emissions increase associated with a major stationary source or major modification, which would construct within 10 kilometers of a Class I area, and have an impact on such area equal to or greater than 1 $\mu g/m^3$ (24-hour average).

(24) *Federal Land Manager* means, with respect to any lands in the United States, the Secretary of the department with authority over such lands.

(25) *High terrain* means any area having an elevation 900 feet or more above the base of the stack of a source.

(26) *Low terrain* means any area other than high terrain.

(27) *Indian Reservation* means any federally recognized reservation established by Treaty, Agreement, Executive Order, or Act of Congress.

(28) *Indian Governing Body* means the governing body of any tribe, band, or group of Indians subject to the jurisdiction of the United States and recognized by the United States as possessing power of self-government.

(29) *Volatile organic compounds (VOC)* is as defined in § 51.100(s) of this part.

(30) *Electric utility steam generating unit* means any steam electric generating unit that is constructed for the purpose of supplying more than one-third of its potential electric output capacity and more than 25 MW electrical output to any utility power distribution system for sale. Any steam supplied to a steam distribution system for the purpose of providing steam to a steam-electric generator that would produce electrical energy for sale is also considered in determining the electrical energy output capacity of the affected facility.

(31) *Pollution control project* means any activity or project undertaken at an existing electric utility steam generating unit for purposes of reducing emissions from such unit. Such activities or projects are limited to:

(i) The installation of conventional or innovative pollution control technology, including but not limited to advanced flue gas desulfurization, sorbent injection for sulfur dioxide and nitrogen oxides controls and electrostatic precipitators;

(ii) An activity or project to accommodate switching to a fuel which is less polluting than the fuel used prior to the activity or project, including but not limited to natural gas or coal re-burning, or the co-firing of natural gas and other fuels for the purpose of controlling emissions;

(iii) A permanent clean coal technology demonstration project conducted under title II, section 101(d) of the Further Continuing Appropriations Act of 1985 (section 5903(d) of title 42 of the United States Code), or subsequent appropriations, up to a total amount of $2,500,000,000 for commercial demonstration of clean coal technology, or similar projects funded through appropriations for the Environmental Protection Agency, or

(iv) A permanent clean coal technology demonstration project that constitutes a repowering project.

(32) *Representative actual annual emissions* means the average rate, in tons per year, at which the source is projected to emit a pollutant for the two-year period after a physical change or change in the method of operation of a unit, (or a different consecutive two-year period within 10 years after that change, where the reviewing authority determines that such period is more representative of normal source operations), considering the effect any such change will have on increasing or decreasing the hourly emissions rate and on projected capacity utilization. In projecting future emissions the reviewing authority shall:

(i) Consider all relevant information, including but not limited to, historical operational data, the company's own representations, filings with the State or Federal regulatory authorities, and compliance plans under title IV of the Clean Air Act; and

(ii) Exclude, in calculating any increase in emissions that results from the particular physical change or change in the method of operation at an electric utility steam generating unit, that portion of the unit's emissions following the change that could have been accommodated during the representative baseline period and is attributable to an increase in projected capacity utilization at the unit that is unrelated to the particular change, including any increased utilization due to the rate of electricity demand growth for the utility system as a whole.

(33) *Clean coal technology* means any technology, including technologies applied at the precombustion, combustion, or post combustion stage, at a new or existing facility which will achieve significant reductions in air emissions of sulfur dioxide or oxides of nitrogen associated with the utilization of coal in the generation of electricity, or process steam which was not in widespread use as of November 15, 1990.

(34) *Clean coal technology demonstration project* means a project using funds appropriated under the heading ''Department of Energy—Clean Coal Technology'', up to a total amount of $2,500,000,000 for commercial demonstration of clean coal technology, or similar projects funded through appropriations for the Environmental Protection Agency. The Federal contribution for a qualifying project shall be at least 20 percent of the total cost of the demonstration project.

(35) *Temporary clean coal technology demonstration project* means a clean coal technology demonstration project that is operated for a period of 5 years or less, and which complies with the State implementation plan for the State in which the project is located and other requirements necessary to attain and maintain the national ambient air quality standards during and after the project is terminated.

(36) (i) *Repowering* means replacement of an existing coal-fired boiler with one of the following clean coal technologies: atmospheric or pressurized fluidized bed combustion, integrated gasification combined cycle, magnetohydrodynamics, direct and indirect coal-fired turbines, integrated gasification fuel cells, or as determined by the Administrator, in consultation with the Secretary of Energy, a derivative of one or more of these technologies, and any other technology capable of controlling multiple combustion emissions simultaneously with improved boiler or generation efficiency and with significantly greater waste reduction relative to the performance of technology in widespread commercial use as of November 15, 1990.

(ii) Repowering shall also include any oil and/or gas-fired unit which has been awarded clean coal technology demonstration funding as of January 1, 1991, by the Department of Energy.

(iii) The reviewing authority shall give expedited consideration to permit applications for any source that satisfies the requirements of this subsection and is granted an extension under section 409 of the Clean Air Act.

(37) *Reactivation of a very clean coal-fired electric utility steam generating unit* means any physical change or change in the method of operation associated with the commencement of commercial operations by a coal-fired utility unit after a period of discontinued operation where the unit:

(i) Has not been in operation for the two-year period prior to the enactment of the Clean Air Act Amendments of

1990, and the emissions from such unit continue to be carried in the permitting authority's emissions inventory at the time of enactment;

(ii) Was equipped prior to shutdown with a continuous system of emissions control that achieves a removal efficiency for sulfur dioxide of no less than 85 percent and a removal efficiency for particulates of no less than 98 percent;

(iii) Is equipped with low-NO_x burners prior to the time of commencement of operations following reactivation; and

(iv) Is otherwise in compliance with the requirements of the Clean Air Act.

(c) *Ambient air increments.* The plan shall contain emission limitations and such other measures as may be necessary to assure that in areas designated as Class I, II, or III, increases in pollutant concentration over the baseline concentration shall be limited to the following:

Pollutant	Maximum allowable increase (micrograms per cubic meter)
Class I	
Particulate matter:	
PM–10, annual arithmetic mean	4
PM–10, 24-hr maximum	8
Sulfur dioxide:	
Annual arithmetic mean	2
24-hr maximum	5
3-hr maximum	25
Nitrogen dioxide: Annual arithmetic mean	2.5
Class II	
Particulate matter:	
PM–10, annual arithmetic mean	17
PM–10, 24-hr maximum	30
Sulfur dioxide:	
Annual arithmetic mean	20
24-hr maximum	91
3-hr maximum	512
Nitrogen dioxide:	
Annual arithmetic mean	25
Class III	
Particulate matter:	
PM–10, annual arithmetic mean	34
PM–10, 24-hr maximum	60
Sulfur dioxide:	
Annual arithmetic mean	40
24-hr maximum	182
3-hr maximum	700
Nitrogen dioxide: Annual arithmetic mean	50

For any period other than an annual period, the applicable maximum allowable increase may be exceeded during one such period per year at any one location.

(d) *Ambient air ceilings.* The plan shall provide that no concentration of a pollutant shall exceed:

(1) The concentration permitted under the national secondary ambient air quality standard, or

(2) The concentration permitted under the national primary ambient air quality standard, whichever concentration is lowest for the pollutant for a period of exposure.

(e) *Restrictions on area classifications.* The plan shall provide that—

(1) All of the following areas which were in existence on August 7, 1977, shall be Class I areas and may not be redesignated:

(i) International parks,

(ii) National wilderness areas which exceed 5,000 acres in size,

(iii) National memorial parks which exceed 5,000 acres in size, and

(iv) National parks which exceed 6,000 acres in size.

(2) Areas which were redesignated as Class I under regulations promulgated before August 7, 1977, shall remain Class I, but may be redesignated as provided in this section.

(3) Any other area, unless otherwise specified in the legislation creating such an area, is initially designated Class II, but may be redesignated as provided in this section.

(4) The following areas may be redesignated only as Class I or II:

(i) An area which as of August 7, 1977, exceeded 10,000 acres in size and was a national monument, a national primitive area, a national preserve, a national recreational area, a national wild and scenic river, a national wildlife refuge, a national lakeshore or seashore; and

(ii) A national park or national wilderness area established after August 7, 1977, which exceeds 10,000 acres in size.

(f) *Exclusions from increment consumption.* (1) The plan may provide that the following concentrations shall be excluded in determining compliance with a maximum allowable increase:

(i) Concentrations attributable to the increase in emissions from stationary sources which have converted from the use of petroleum products, natural gas, or both by reason of an order in effect

under section 2 (a) and (b) of the Energy Supply and Environmental Coordination Act of 1974 (or any superseding legislation) over the emissions from such sources before the effective date of such an order;

(ii) Concentrations attributable to the increase in emissions from sources which have converted from using natural gas by reason of natural gas curtailment plan in effect pursuant to the Federal Power Act over the emissions from such sources before the effective date of such plan;

(iii) Concentrations of particulate matter attributable to the increase in emissions from construction or other temporary emission-related activities of new or modified sources;

(iv) The increase in concentrations attributable to new sources outside the United States over the concentrations attributable to existing sources which are included in the baseline concentration; and

(v) Concentrations attributable to the temporary increase in emissions of sulfur dioxide, particulate matter, or nitrogen oxides from stationary sources which are affected by plan revisions approved by the Administrator as meeting the criteria specified in paragraph (f)(4) of this section.

(2) If the plan provides that the concentrations to which paragraph (f)(1) (i) or (ii) of this section, refers shall be excluded, it shall also provide that no exclusion of such concentrations shall apply more than five years after the effective date of the order to which paragraph (f)(1)(i) of this section, refers or the plan to which paragraph (f)(1)(ii) of this section, refers, whichever is applicable. If both such order and plan are applicable, no such exclusion shall apply more than five years after the later of such effective dates.

(3) [Reserved]

(4) For purposes of excluding concentrations pursuant to paragraph (f)(1)(v) of this section, the Administrator may approve a plan revision that:

(i) Specifies the time over which the temporary emissions increase of sulfur dioxide, particulate matter, or nitrogen oxides would occur. Such time is not to exceed 2 years in duration unless a longer time is approved by the Administrator.

(ii) Specifies that the time period for excluding certain contributions in accordance with paragraph (f)(4)(i) of this section, is not renewable;

(iii) Allows no emissions increase from a stationary source which would:

(*a*) Impact a Class I area or an area where an applicable increment is known to be violated; or

(*b*) Cause or contribute to the violation of a national ambient air quality standard;

(iv) Requires limitations to be in effect the end of the time period specified in accordance with paragraph (f)(4)(i) of this section, which would ensure that the emissions levels from stationary sources affected by the plan revision would not exceed those levels occurring from such sources before the plan revision was approved.

(g) *Redesignation.* (1) The plan shall provide that all areas of the State (except as otherwise provided under paragraph (e) of this section) shall be designated either Class I, Class II, or Class III. Any designation other than Class II shall be subject to the redesignation procedures of this paragraph. Redesignation (except as otherwise precluded by paragraph (e) of this section) may be proposed by the respective States or Indian Governing Bodies, as provided below, subject to approval by the Administrator as a revision to the applicable State implementation plan.

(2) The plan may provide that the State may submit to the Administrator a proposal to redesignate areas of the State Class I or Class II: *Provided,* That:

(i) At least one public hearing has been held in accordance with procedures established in § 51.102.

(ii) Other States, Indian Governing Bodies, and Federal Land Managers whose lands may be affected by the proposed redesignation were notified at least 30 days prior to the public hearing;

(iii) A discussion of the reasons for the proposed redesignation, including a satisfactory description and analysis of the health, environmental, economic, social, and energy effects of the proposed redesignation, was prepared and made available for public inspection at

least 30 days prior to the hearing and the notice announcing the hearing contained appropriate notification of the availability of such discussion;

(iv) Prior to the issuance of notice respecting the redesignation of an area that includes any Federal lands, the State has provided written notice to the appropriate Federal Land Manager and afforded adequate opportunity (not in excess of 60 days) to confer with the State respecting the redesignation and to submit written comments and recommendations. In redesignating any area with respect to which any Federal Land Manager had submitted written comments and recommendations, the State shall have published a list of any inconsistency between such redesignation and such comments and recommendations (together with the reasons for making such redesignation against the recommendation of the Federal Land Manager); and

(v) The State has proposed the redesignation after consultation with the elected leadership of local and other substate general purpose governments in the area covered by the proposed redesignation.

(3) The plan may provide that any area other than an area to which paragraph (e) of this section refers may be redesignated as Class III if—

(i) The redesignation would meet the requirements of provisions established in accordance with paragraph (g)(2) of this section;

(ii) The redesignation, except any established by an Indian Governing Body, has been specifically approved by the Governor of the State, after consultation with the appropriate committees of the legislature, if it is in session, or with the leadership of the legislature, if it is not in session (unless State law provides that such redesignation must be specifically approved by State legislation) and if general purpose units of local government representing a majority of the residents of the area to be redesignated enact legislation (including resolutions where appropriate) concurring in the redesignation;

(iii) The redesignation would not cause, or contribute to, a concentration of any air pollutant which would exceed any maximum allowable increase permitted under the classification of any other area or any national ambient air quality standard; and

(iv) Any permit application for any major stationary source or major modification subject to provisions established in accordance with paragraph (l) of this section which could receive a permit only if the area in question were redesignated as Class III, and any material submitted as part of that application, were available, insofar as was practicable, for public inspection prior to any public hearing on redesignation of any area as Class III.

(4) The plan shall provide that lands within the exterior boundaries of Indian Reservations may be redesignated only by the appropriate Indian Governing Body. The appropriate Indian Governing Body may submit to the Administrator a proposal to redesignate areas Class I, Class II, or Class III: *Provided,* That:

(i) The Indian Governing Body has followed procedures equivalent to those required of a State under paragraphs (g) (2), (3)(iii), and (3)(iv) of this section; and

(ii) Such redesignation is proposed after consultation with the State(s) in which the Indian Reservation is located and which border the Indian Reservation.

(5) The Administrator shall disapprove, within 90 days of submission, a proposed redesignation of any area only if he finds, after notice and opportunity for public hearing, that such redesignation does not meet the procedural requirements of this section or is inconsistent with paragraph (e) of this section. If any such disapproval occurs, the classification of the area shall be that which was in effect prior to the redesignation which was disapproved.

(6) If the Administrator disapproves any proposed area designation, the State or Indian Governing Body, as appropriate, may resubmit the proposal after correcting the deficiencies noted by the Administrator.

(h) *Stack heights.* The plan shall provide, as a minimum, that the degree of emission limitation required for control of any air pollutant under the plan shall not be affected in any manner by—

(1) So much of a stack height, not in existence before December 31, 1970, as exceeds good engineering practice, or

(2) Any other dispersion technique not implemented before then.

(i) *Review of major stationary sources and major modifications—source applicability and exemptions.*

(1) The plan shall provide that no major stationary source or major modification shall begin actual construction unless, as a minumum, requirements equivalent to those contained in paragraphs (j) through (r) of this section have been met.

(2) The plan shall provide that the requirements equivalent to those contained in paragraphs (j) through (r) of this section shall apply to any major stationary source and any major modification with respect to each pollutant subject to regulation under the Act that it would emit, except as this section would otherwise allow.

(3) The plan shall provide that requirements equivalent to those contained in paragraphs (j) through (r) of this section apply only to any major stationary source or major modification that would be constructed in an area which is designated as attainment or unclassifiable under section 107(a)(1)(D) or (E) of the Act; and

(4) The plan may provide that requirements equivalent to those contained in paragraphs (j) through (r) of this section do not apply to a particular major stationary source or major modification if:

(i) The major stationary source would be a nonprofit health or nonprofit educational institution or a major modification that would occur at such an institution; or

(ii) The source or modification would be a major stationary source or major modification only if fugitive emissions, to the extent quantifiable, are considered in calculating the potential to emit of the stationary source or modification and such source does not belong to any following categories:

(*a*) Coal cleaning plants (with thermal dryers);

(*b*) Kraft pulp mills;

(*c*) Portland cement plants;

(*d*) Primary zinc smelters;

(*e*) Iron and steel mills;

(*f*) Primary aluminum ore reduction plants;

(*g*) Primary copper smelters;

(*h*) Municipal incinerators capable of charging more than 250 tons of refuse per day;

(*i*) Hydrofluoric, sulfuric, or nitric acid plants;

(*j*) Petroleum refineries;

(*k*) Lime plants;

(*l*) Phosphate rock processing plants;

(*m*) Coke oven batteries;

(*n*) Sulfur recovery plants;

(*o*) Carbon black plants (furnace process);

(*p*) Primary lead smelters;

(*q*) Fuel conversion plants;

(*r*) Sintering plants;

(*s*) Secondary metal production plants;

(*t*) Chemical process plants;

(*u*) Fossil-fuel boilers (or combination thereof) totaling more than 250 million British thermal units per hour heat input;

(*v*) Petroleum storage and transfer units with a total storage capacity exceeding 300,000 barrels;

(*w*) Taconite ore processing plants;

(*x*) Glass fiber processing plants;

(*y*) Charcoal production plants;

(*z*) Fossil fuel-fired steam electric plants of more than 250 million British thermal units per hour heat input;

(*aa*) Any other stationary source category which, as of August 7, 1980, is being regulated under section 111 or 112 of the Act; or

(iii) The source or modification is a portable stationary source which has previously received a permit under requirements equivalent to those contained in paragraphs (j) through (r) of this section, if:

(*a*) The source proposes to relocate and emissions of the source at the new location would be temporary; and

(*b*) The emissions from the source would not exceed its allowable emissions; and

(*c*) The emissions from the source would impact no Class I area and no area where an applicable increment is known to be violated; and

(*d*) Reasonable notice is given to the reviewing authority prior to the relocation identifying the proposed new location and the probable duration of operation at the new location. Such notice shall be given to the reviewing authority not less than 10 days in advance of the proposed relocation unless a different time duration is previously approved by the reviewing authority.

(5) The plan may provide that requirements equivalent to those contained in paragraphs (j) through (r) of this section do not apply to a major stationary source or major modification with respect to a particular pollutant if the owner or operator demonstrates that, as to that pollutant, the source or modification is located in an area designated as nonattainment under section 107 of the Act.

(6) The plan may provide that requirements equivalent to those contained in paragraphs (k), (m), and (o) of this section do not apply to a proposed major stationary source or major modification with respect to a particular pollutant, if the allowable emissions of that pollutant from a new source, or the net emissions increase of that pollutant from a modification, would be temporary and impact no Class I area and no area where an applicable increment is known to be violated.

(7) The plan may provide that requirements equivalent to those contained in paragraphs (k), (m), and (o) of this section as they relate to any maximum allowable increase for a Class II area do not apply to a modification of a major stationary source that was in existence on March 1, 1978, if the net increase in allowable emissions of each pollutant subject to regulation under the Act from the modification after the application of best available control technology would be less than 50 tons per year.

(8) The plan may provide that the reviewing authority may exempt a proposed major stationary source or major modification from the requirements of paragraph (m) of this section, with respect to monitoring for a particular pollutant, if:

(i) The emissions increase of the pollutant from a new stationary source or the net emissions increase of the pollutant from a modification would cause, in any area, air quality impacts less than the following amounts:

(*a*) Carbon monoxide—575 ug/m^3, 8-hour average;

(*b*) Nitrogen dioxide—14 ug/m^3, annual average;

(c) Particulate matter—10 μg/m^3 of PM–10, 24-hour average.

(*d*) Sulfur dioxide—13 ug/m^3, 24-hour average;

(*e*) Ozone;[1]

(*f*) Lead—0.1 μg/m^3, 3-month average.

(*g*) Mercury—0.25 ug/m^3, 24-hour average;

(*h*) Beryllium—0.001 μg/m^3, 24-hour average:

(*i*) Fluorides—0.25 ug/m^3, 24-hour average;

(*j*) Vinyl chloride—15 ug/m^3, 24-hour average;

(*k*) Total reduced sulfur—10 ug/m^3, 1-hour average;

(*l*) Hydrogen sulfide—0.2 μg/m^3, 1-hour average:

(*m*) Reduced sulfur compounds—10 ug/m^3, 1-hour average; or

(ii) The concentrations of the pollutant in the area that the source or modification would affect are less than the concentrations listed in (i)(8)(i) of this section; or

(iii) The pollutants is not listed in paragraph (i)(8)(i) of this section.

(9) If EPA approves a plan revision under 40 CFR 51.166 as in effect before August 7, 1980, any subsequent revision which meets the requirements of this section may contain transition provisions which parallel the transition provisions of 40 CFR 52.21(i)(9), (i)(10) and (m)(1)(v) as in effect on that date, which provisions relate to requirements for best available control technology and air quality analyses. Any such subsequent revision may not contain any transition provision which in the context of the revision would operate any less stringently than would its counterpart in 40 CFR 52.21.

(10) If EPA approves a plan revision under § 51.166 as in effect [before July

[1] No *de minimis* air quality level is provided for ozone. However, any net increase of 100 tons per year or more of volatile organic compounds subject to PSD would be required to perform and ambient impact analysis, including the gathering of ambient air quality data.

31, 1987], any subsequent revision which meets the requirements of this section may contain transition provisions which parallel the transition provisions of § 52.21 (i)(11), and (m)(1) (vii) and (viii) of this chapter as in effect on that date, these provisions being related to monitoring requirements for particulate matter. Any such subsequent revision may not contain any transition provision which in the context of the revision would operate any less stringently than would its counterpart in § 52.21 of this chapter.

(11) The plan may provide that the permitting requirements equivalent to those contained in paragraph (k)(2) of this section do not apply to a stationary source or modification with respect to any maximum allowable increase for nitrogen oxides if the owner or operator of the source or modification submitted an application for a permit under the applicable permit program approved or promulgated under the Act before the provisions embodying the maximum allowable increase took effect as part of the plan and the permitting authority subsequently determined that the application as submitted before that date was complete.

(12) The plan may provide that the permitting requirements equivalent to those contained in paragraph (k)(2) of this section shall not apply to a stationary source or modification with respect to any maximum allowable increase for PM–10 if (i) the owner or operator of the source or modification submitted an application for a permit under the applicable permit program approved under the Act before the provisions embodying the maximum allowable increases for PM–10 took effect as part of the plan, and (ii) the permitting authority subsequently determined that the application as submitted before that date was complete. Instead, the applicable requirements equivalent to paragraph (k)(2) shall apply with respect to the maximum allowable increases for TSP as in effect on the date the application was submitted.

(j) *Control technology review.* The plan shall provide that:

(1) A major stationary source or major modification shall meet each applicable emissions limitation under the State Implementation Plan and each applicable emission standards and standard of performance under 40 CFR parts 60 and 61.

(2) A new major stationary source shall apply best available control technology for each pollutant subject to regulation under the Act that it would have the potential to emit in significant amounts.

(3) A major modification shall apply best available control technology for each pollutant subject to regulation under the Act for which it would be a significant net emissions increase at the source. This requirement applies to each proposed emissions unit at which a net emissions increase in the pollutant would occur as a result of a physical change or change in the method of operation in the unit.

(4) For phased construction projects, the determination of best available control technology shall be reviewed and modified as appropriate at the least reasonable time which occurs no later than 18 months prior to commencement of construction of each independent phase of the project. At such time, the owner or operator of the applicable stationary source may be required to demonstrate the adequacy of any previous determination of best available control technology for the source.

(k) *Source impact analysis.* The plan shall provide that the owner or operator of the proposed source or modification shall demonstrate that allowable emission increases from the proposed source or modification, in conjunction with all other applicable emissions increases or reduction (including secondary emissions) would not cause or contribute to air pollution in violation of:

(1) Any national ambient air quality standard in any air quality control region; or

(2) Any applicable maximum allowable increase over the baseline concentration in any area.

(l) *Air quality models.* The plan shall provide for procedures which specify that—

(1) All applications of air quality modeling involved in this subpart shall be based on the applicable models, data bases, and other requirements specified

in the appendix W of this part (''Guideline on Air Quality Models (Revised)'' (1986), supplement A (1987), supplement B (1993) and supplement C (1995)). The Guideline and its supplements (EPA Publication No. 450/2–78–027R) are also for sale from the U.S. Department of Commerce, National Technical Information Service, 5825 Port Royal Road, Springfield, VA, 22161.

(2) Where an air quality model specified in the Appendix W of this part (''Guideline on Air Quality Models (Revised)'' (1986), supplement A (1987), supplement B (1993) and supplement C (1995)) is inappropriate, the model may be modified or another model substituted. Such a modification or substitution of a model may be made on a case-by-case basis or, where appropriate, on a generic basis for a specific state program. Written approval of the Administrator must be obtained for any modification or substitution. In addition, use of a modified or substituted model must be subject to notice and opportunity for public comment under procedures set forth in § 51.102.

(m) *Air quality analysis*—(1) *Preapplication analysis.* (i) The plan shall provide that any application for a permit under regulations approved pursuant to this section shall contain an analysis of ambient air quality in the area that the major stationary source or major modification would affect for each of the following pollutants:

(*a*) For the source, each pollutant that it would have the potential to emit in a significant amount;

(*b*) For the modification, each pollutant for which it would result in a significant net emissions increase.

(ii) The plan shall provide that, with respect to any such pollutant for which no National Ambient Air Quality Standard exists, the analysis shall contain such air quality monitoring data as the reviewing authority determines is necessary to assess ambient air quality for that pollutant in any area that the emissions of that pollutant would affect.

(iii) The plan shall provide that with respect to any such pollutant (other than nonmethane hydrocarbons) for which such a standard does exist, the analysis shall contain continuous air quality monitoring data gathered for purposes of determining whether emissions of that pollutant would cause or contribute to a violation of the standard or any maxiumum allowable increase.

(iv) The plan shall provide that, in general, the continuous air monitoring data that is required shall have been gathered over a period of one year and shall represent the year preceding receipt of the application, except that, if the reviewing authority determines that a complete and adequate analysis can be accomplished with monitoring data gathered over a period shorter than one year (but not to be less than four months), the data that is required shall have been gathered over at least that shorter period.

(v) The plan may provide that the owner or operator of a proposed major stationary source or major modification of volatile organic compounds who satisfies all conditions of 40 CFR part 51 appendix S, section IV may provide postapproval monitoring data for ozone in lieu of providing preconstruction data as required under paragraph (m)(1) of this section.

(2) *Post-construction monitoring.* The plan shall provide that the owner or operator of a major stationary source or major modification shall, after construction of the stationary source or modification, conduct such ambient monitoring as the reviewing authority determines is necessary to determine the effect emissions from the stationary source or modification may have, or are having, on air quality in any area.

(3) *Operation of monitoring stations.* The plan shall provide that the owner or operator of a major stationary source or major modification shall meet the requirements of appendix B to part 58 of this chapter during the operation of monitoring stations for purposes of satisfying paragraph (m) of this section.

(n) *Source information.* (1) The plan shall provide that the owner or operator of a proposed source or modification shall submit all information necessary to perform any analysis or make any determination required under procedures established in accordance with this section.

(2) The plan may provide that such information shall include:

(i) A description of the nature, location, design capacity, and typical operating schedule of the source or modification, including specifications and drawings showing its design and plant layout;

(ii) A detailed schedule for construction of the source or modification;

(iii) A detailed description as to what system of continuous emission reduction is planned by the source or modification, emission estimates, and any other information as necessary to determine that best available control technology as applicable would be applied;

(3) The plan shall provide that upon request of the State, the owner or operator shall also provide information on:

(i) The air quality impact of the source or modification, including meteorological and topographical data necessary to estimate such impact; and

(ii) The air quality impacts and the nature and extent of any or all general commercial, residential, industrial, and other growth which has occurred since August 7, 1977, in the area the source or modification would affect.

(o) *Additional impact analyses.* The plan shall provide that—

(1) The owner or operator shall provide an analysis of the impairment to visibility, soils, and vegetation that would occur as a result of the source or modification and general commercial, residential, industrial, and other growth associated with the source or modification. The owner or operator need not provide an analysis of the impact on vegetation having no significant commercial or recreational value.

(2) The owner or operator shall provide an analysis of the air quality impact projected for the area as a result of general commercial, residential, industrial, and other growth associated with the source or modification.

(p) *Sources impacting Federal Class I areas—additional requirements*—(1) *Notice to EPA.* The plan shall provide that the reviewing authority shall transmit to the Administrator a copy of each permit application relating to a major stationary source or major modification and provide notice to the Administrator of every action related to the consideration of such permit.

(2) *Federal Land Manager.* The Federal Land Manager and the Federal official charged with direct responsibility for management of Class I lands have an affirmative responsibility to protect the air quality related values (including visibility) of any such lands and to consider, in consultation with the Administrator, whether a proposed source or modification would have an adverse impact on such values.

(3) *Denial—impact on air quality related values.* The plan shall provide a mechanism whereby a Federal Land Manager of any such lands may present to the State, after the reviewing authority's preliminary determination required under procedures developed in accordance with paragraph (r) of this section, a demonstration that the emissions from the proposed source or modification would have an adverse impact on the air quality-related values (including visibility) of any Federal mandatory Class I lands, notwithstanding that the change in air quality resulting from emissions from such source or modification would not cause or contribute to concentrations which would exceed the maximum allowable increases for a Class I area. If the State concurs with such demonstration, the reviewing authority shall not issue the permit.

(4) *Class I Variances.* The plan may provide that the owner or operator of a proposed source or modification may demonstrate to the Federal Land Manager that the emissions from such source would have no adverse impact on the air quality related values of such lands (including visibility), notwithstanding that the change in air quality resulting from emissions from such source or modification would cause or contribute to concentrations which would exceed the maximum allowable increases for a Class I area. If the Federal land manager concurs with such demonstration and so certifies to the State, the reviewing authority may: *Provided,* That applicable requirements are otherwise met, issue the permit with such emission limitations as may be necessary to assure that emissions of sulfur dioxide, particulate matter, and nitrogen oxides would not

exceed the following maximum allowable increases over minor source baseline concentration for such pollutants:

Pollutant	Maximum allowable increase (micrograms per cubic meter)
Particulate matter:	
PM–10, annual arithmetic mean	17
PM–10, 24-hour maximum	30
Sulfur dioxide:	
Annual arithmetic mean	20
24-hr maximum	91
3-hr maximum	325
Nitrogen dioxide: Annual arithmetic mean	25

(5) *Sulfur dioxide variance by Governor with Federal Land Manager's concurrence.* The plan may provide that—

(i) The owner or operator of a proposed source or modification which cannot be approved under procedures developed pursuant to paragraph (q)(4) of this section may demonstrate to the Governor that the source or modification cannot be constructed by reason of any maximum allowable increase for sulfur dioxide for periods of twenty-four hours or less applicable to any Class I area and, in the case of Federal mandatory Class I areas, that a variance under this clause would not adversely affect the air quality related values of the area (including visibility);

(ii) The Governor, after consideration of the Federal Land Manager's recommendation (if any) and subject to his concurrence, may grant, after notice and an opportunity for a public hearing, a variance from such maximum allowable increase; and

(iii) If such variance is granted, the reviewing authority may issue a permit to such source or modification in accordance with provisions developed pursuant to paragraph (q)(7) of this section: *Provided,* That the applicable requirements of the plan are otherwise met.

(6) *Variance by the Governor with the President's concurrence.* The plan may provide that—

(i) The recommendations of the Governor and the Federal Land Manager shall be transferred to the President in any case where the Governor recommends a variance in which the Federal Land Manager does not concur;

(ii) The President may approve the Governor's recommendation if he finds that such variance is in the national interest; and

(iii) If such a variance is approved, the reviewing authority may issue a permit in accordance with provisions developed pursuant to the requirements of paragraph (q)(7) of this section: *Provided,* That the applicable requirements of the plan are otherwise met.

(7) *Emission limitations for Presidential or gubernatorial variance.* The plan shall provide that in the case of a permit issued under procedures developed pursuant to paragraph (q) (5) or (6) of this section, the source or modification shall comply with emission limitations as may be necessary to assure that emissions of sulfur dioxide from the source or modification would not (during any day on which the otherwise applicable maximum allowable increases are exceeded) cause or contribute to concentrations which would exceed the following maximum allowable increases over the baseline concentration and to assure that such emissions would not cause or contribute to concentrations which exceed the otherwise applicable maximum allowable increases for periods of exposure of 24 hours or less for more than 18 days, not necessarily consecutive, during any annual period:

MAXIMUM ALLOWABLE INCREASE

[Micrograms per cubic meter]

Period of exposure	Terrain areas	
	Low	High
24-hr maximum	36	62
3-hr maximum	130	221

(q) *Public participation.* The plan shall provide that—

(1) The reviewing authority shall notify all applicants within a specified time period as to the completeness of the application or any deficiency in the application or information submitted. In the event of such a deficiency, the date of receipt of the application shall be the date on which the reviewing authority received all required information.

(2) Within one year after receipt of a complete application, the reviewing authority shall:

(i) Make a preliminary determination whether construction should be approved, approved with conditions, or disapproved.

(ii) Make available in at least one location in each region in which the proposed source would be constructed a copy of all materials the applicant submitted, a copy of the preliminary determination, and a copy or summary of other materials, if any, considered in making the preliminary determination.

(iii) Notify the public, by advertisement in a newspaper of general circulation in each region in which the proposed source would be constructed, of the application, the preliminary determination, the degree of increment consumption that is expected from the source or modification, and of the opportunity for comment at a public hearing as well as written public comment.

(iv) Send a copy of the notice of public comment to the applicant, the Administrator and to officials and agencies having cognizance over the location where the proposed construction would occur as follows: Any other State or local air pollution control agencies, the chief executives of the city and county where the source would be located; any comprehensive regional land use planning agency, and any State, Federal Land Manager, or Indian Governing body whose lands may be affected by emissions from the source or modification.

(v) Provide opportunity for a public hearing for interested persons to appear and submit written or oral comments on the air quality impact of the source, alternatives to it, the control technology required, and other appropriate considerations.

(vi) Consider all written comments submitted within a time specified in the notice of public comment and all comments received at any public hearing(s) in making a final decision on the approvability of the application. The reviewing authority shall make all comments available for public inspection in the same locations where the reviewing authority made available preconstruction information relating to the proposed source or modification.

(vii) Make a final determination whether construction should be approved, approved with conditions, or disapproved.

(viii) Notify the applicant in writing of the final determination and make such notification available for public inspection at the same location where the reviewing authority made available preconstruction information and public comments relating to the source.

(r) *Source obligation*. (1) The plan shall include enforceable procedures to provide that approval to construct shall not relieve any owner or operator of the responsibility to comply fully with applicable provisions of the plan and any other requirements under local, State or Federal law.

(2) The plan shall provide that at such time that a particular source or modification becomes a major stationary source or major modification solely by virtue of a relaxation in any enforceable limitation which was established after August 7, 1980, on the capacity of the source or modification otherwise to emit a pollutant, such as a restriction on hours of operation, then the requirements of paragraphs (j) through (s) of this section shall apply to the source or modification as though construction had not yet commenced on the source or modification.

(s) *Innovative control technology*. (1) The plan may provide that an owner or operator of a proposed major stationary source or major modification may request the reviewing authority to approve a system of innovative control technology.

(2) The plan may provide that the reviewing authority may, with the consent of the governor(s) of other affected state(s), determine that the source or modification may employ a system of innovative control technology, if:

(i) The proposed control system would not cause or contribute to an unreasonable risk to public health, welfare, or safety in its operation or function;

(ii) The owner or operator agrees to achieve a level of continuous emissions reduction equivalent to that which would have been required under paragraph (j)(2) of this section, by a date

specified by the reviewing authority. Such date shall not be later than 4 years from the time of startup or 7 years from permit issuance;

(iii) The source or modification would meet the requirements equivalent to those in paragraphs (j) and (k) of this section, based on the emissions rate that the stationary source employing the system of innovative control technology would be required to meet on the date specified by the reviewing authority;

(iv) The source or modification would not before the date specified by the reviewing authority:

(*a*) Cause or contribute to any violation of an applicable national ambient air quality standard; or

(*b*) Impact any area where an applicable increment is known to be violated;

(v) All other applicable requirements including those for public participation have been met.

(vi) The provisions of paragraph (p) of this section (relating to Class I areas) have been satisfied with respect to all periods during the life of the source or modification.

(3) The plan shall provide that the reviewing authority shall withdraw any approval to employ a system of innovative control technology made under this section, if:

(i) The proposed system fails by the specified date to achieve the required continuous emissions reduction rate; or

(ii) The proposed system fails before the specified date so as to contribute to an unreasonable risk to public health, welfare, or safety; or

(iii) The reviewing authority decides at any time that the proposed system is unlikely to achieve the required level of control or to protect the public health, welfare, or safety.

(4) The plan may provide that if a source or modification fails to meet the required level of continuous emissions reduction within the specified time period, or if the approval is withdrawn in accordance with paragraph (s)(3) of this section, the reviewing authority may allow the source or modification up to an additional 3 years to meet the requirement for the application of best available control technology through use of a demonstrated system of control.

(Secs. 101(b)(1), 110, 160–169, 171–178, and 301(a), Clean Air Act, as amended (42 U.S.C. 7401(b)(1), 7410, 7470–7479, 7501–7508, and 7601(a)); sec. 129(a), Clean Air Act Amendments of 1977 (Pub. L. 95–95, 91 Stat. 685 (Aug. 7, 1977)))

[43 FR 26382, June 19, 1978]

EDITORIAL NOTE: For FEDERAL REGISTER citations affecting § 51.166, see the List of CFR Sections Affected in the Finding Aids section of this volume.

Subpart J—Ambient Air Quality Surveillance

AUTHORITY: Secs. 110, 301(a), 313, 319, Clean Air Act (42 U.S.C. 7410, 7601(a), 7613, 7619).

§ 51.190 Ambient air quality monitoring requirements.

The requirements for monitoring ambient air quality for purposes of the plan are located in subpart C of part 58 of this chapter.

[44 FR 27569, May 10, 1979]

Subpart K—Source Survelliance

SOURCE: 51 FR 40673, Nov. 7, 1986, unless otherwise noted.

§ 51.210 General.

Each plan must provide for monitoring the status of compliance with any rules and regulations that set forth any portion of the control strategy. Specifically, the plan must meet the requirements of this subpart.

§ 51.211 Emission reports and recordkeeping.

The plan must provide for legally enforceable procedures for requiring owners or operators of stationary sources to maintain records of and periodically report to the State—

(a) Information on the nature and amount of emissions from the stationary sources; and

(b) Other information as may be necessary to enable the State to determine whether the sources are in compliance with applicable portions of the control strategy.

§51.212 Testing, inspection, enforcement, and complaints.

The plan must provide for—

(a) Periodic testing and inspection of stationary sources; and

(b) Establishment of a system for detecting violations of any rules and regulations through the enforcement of appropriate visible emission limitations and for investigating complaints.

(c) Enforceable test methods for each emission limit specified in the plan. As an enforceable method, States may use:

(1) Any of the appropriate methods in appendix M to this part, Recommended Test Methods for State Implementation Plans; or

(2) An alternative method following review and approval of that method by the Administrator; or

(3) Any appropriate method in appendix A to 40 CFR part 60.

[51 FR 40673, Nov. 7, 1986, as amended at 55 FR 14249, Apr. 17, 1990]

§51.213 Transportation control measures.

(a) The plan must contain procedures for obtaining and maintaining data on actual emissions reductions achieved as a result of implementing transportation control measures.

(b) In the case of measures based on traffic flow changes or reductions in vehicle use, the data must include observed changes in vehicle miles traveled and average speeds.

(c) The data must be maintained in such a way as to facilitate comparison of the planned and actual efficacy of the transportation control measures.

[61 FR 30163, June 14, 1996]

§51.214 Continuous emission monitoring.

(a) The plan must contain legally enforceable procedures to—

(1) Require stationary sources subject to emission standards as part of an applicable plan to install, calibrate, maintain, and operate equipment for continuously monitoring and recording emissions; and

(2) Provide other information as specified in appendix P of this part.

(b) The procedures must—

(1) Identify the types of sources, by source category and capacity, that must install the equipment; and

(2) Identify for each source category the pollutants which must be monitored.

(c) The procedures must, as a minimum, require the types of sources set forth in appendix P of this part to meet the applicable requirements set forth therein.

(d)(1) The procedures must contain provisions that require the owner or operator of each source subject to continuous emission monitoring and recording requirements to maintain a file of all pertinent information for at least two years following the date of collection of that information.

(2) The information must include emission measurements, continuous monitoring system performance testing measurements, performance evaluations, calibration checks, and adjustments and maintenance performed on such monitoring systems and other reports and records required by appendix P of this part.

(e) The procedures must require the source owner or operator to submit information relating to emissions and operation of the emission monitors to the State to the extent described in appendix P at least as frequently as described therein.

(f) (1) The procedures must provide that sources subject to the requirements of paragraph (c) of this section must have installed all necessary equipment and shall have begun monitoring and recording within 18 months after either—

(i) The approval of a State plan requiring monitoring for that source; or

(ii) Promulgation by the Agency of monitoring requirements for that source.

(2) The State may grant reasonable extensions of this period to sources that—

(i) Have made good faith efforts to purchases, install, and begin the monitoring and recording of emission data; and

(ii) Have been unable to complete the installation within the period.

Subpart L—Legal Authority

SOURCE: 51 FR 40673, Nov. 7, 1986, unless otherwise noted.

§ 51.230 Requirements for all plans.

Each plan must show that the State has legal authority to carry out the plan, including authority to:

(a) Adopt emission standards and limitations and any other measures necessary for attainment and maintenance of national standards.

(b) Enforce applicable laws, regulations, and standards, and seek injunctive relief.

(c) Abate pollutant emissions on an emergency basis to prevent substantial endangerment to the health of persons, i.e., authority comparable to that available to the Administrator under section 305 of the Act.

(d) Prevent construction, modification, or operation of a facility, building, structure, or installation, or combination thereof, which directly or indirectly results or may result in emissions of any air pollutant at any location which will prevent the attainment or maintenance of a national standard.

(e) Obtain information necessary to determine whether air pollution sources are in compliance with applicable laws, regulations, and standards, including authority to require recordkeeping and to make inspections and conduct tests of air pollution sources.

(f) Require owners or operators of stationary sources to install, maintain, and use emission monitoring devices and to make periodic reports to the State on the nature and amounts of emissions from such stationary sources; also authority for the State to make such data available to the public as reported and as correlated with any applicable emission standards or limitations.

§ 51.231 Identification of legal authority.

(a) The provisions of law or regulation which the State determines provide the authorities required under this section must be specifically identified, and copies of such laws or regulations be submitted with the plan.

(b) The plan must show that the legal authorities specified in this subpart are available to the State at the time of submission of the plan.

(c) Legal authority adequate to fulfill the requirements of § 51.230 (e) and (f) of this subpart may be delegated to the State under section 114 of the Act.

§ 51.232 Assignment of legal authority to local agencies.

(a) A State government agency other than the State air pollution control agency may be assigned responsibility for carrying out a portion of a plan if the plan demonstrates to the Administrator's satisfaction that the State governmental agency has the legal authority necessary to carry out the portion of plan.

(b) The State may authorize a local agency to carry out a plan, or portion thereof, within such local agency's jurisdiction if—

(1) The plan demonstrates to the Administrator's satisfaction that the local agency has the legal authority necessary to implement the plan or portion of it; and

(2) This authorization does not relieve the State of responsibility under the Act for carrying out such plan, or portion thereof.

Subpart M—Intergovernmental Consultation

AUTHORITY: Secs. 110, 121, 174(a), 301(a), Clean Air Act, as amended (42 U.S.C. 7410, 7421, 7504, and 7601(a)).

SOURCE: 44 FR 35179, June 18, 1979, unless otherwise noted.

AGENCY DESIGNATION

§ 51.240 General plan requirements.

Each State implementation plan must identify organizations, by official title, that will participate in developing, implementing, and enforcing the plan and the responsibilities of such organizations. The plan shall include any related agreements or memoranda of understanding among the organizations.

§ 51.241 Nonattainment areas for carbon monoxide and ozone.

(a) For each AQCR or portion of an AQCR in which the national primary

standard for carbon monoxide or ozone will not be attained by July 1, 1979, the Governor (or Governors for interstate areas) shall certify, after consultation with local officials, the organization responsible for developing the revised implementation plan or portions thereof for such AQCR.

(b)–(f) [Reserved]

[44 FR 35179, June 18, 1979, as amended at 48 FR 29302, June 24, 1983; 60 FR 33922, June 29, 1995; 61 FR 16060, Apr. 11, 1996]

§51.242 [Reserved]

Subpart N—Compliance Schedules

SOURCE: 51 FR 40673, Nov. 7, 1986, unless otherwise noted.

§51.260 Legally enforceable compliance schedules.

(a) Each plan shall contain legally enforceable compliance schedules setting forth the dates by which all stationary and mobile sources or categories of such sources must be in compliance with any applicable requirement of the plan.

(b) The compliance schedules must contain increments of progress required by §51.262 of this subpart.

§51.261 Final compliance schedules.

(a) Unless EPA grants an extension under subpart R, compliance schedules designed to provide for attainment of a primary standard must—

(1) Provide for compliance with the applicable plan requirements as soon as practicable; or

(2) Provide for compliance no later than the date specified for attainment of the primary standard under;

(b) Unless EPA grants an extension under subpart R, compliance schedules designed to provide for attainment of a secondary standard must—

(1) Provide for compliance with the applicable plan requirements in a reasonable time; or

(2) Provide for compliance no later than the date specified for the attainment of the secondary standard under §51.110(c).

§51.262 Extension beyond one-year.

(a) Any compliance schedule or revision of it extending over a period of more than one year from the date of its adoption by the State agency must provide for legally enforceable increments of progress toward compliance by each affected source or category of sources. The increments of progress must include—

(1) Each increment of progress specified in §51.100(q); and

(2) Additional increments of progress as may be necessary to permit close and effective supervision of progress toward timely compliance.

(b) [Reserved]

Subpart O—Miscellaneous Plan Content Requirements

AUTHORITY: Secs. 110, 301(a), 313, 319, Clean Air Act (42 U.S.C. 7410, 7601(a), 7613, 7619).

§51.280 Resources.

Each plan must include a description of the resources available to the State and local agencies at the date of submission of the plan and of any additional resources needed to carry out the plan during the 5-year period following its submission. The description must include projections of the extent to which resources will be acquired at 1-, 3-, and 5-year intervals.

[51 FR 40674, Nov. 7, 1986]

§51.281 Copies of rules and regulations.

Emission limitations and other measures necessary for attainment and maintenance of any national standard, including any measures necessary to implement the requirements of subpart L must be adopted as rules and regulations enforceable by the State agency. Copies of all such rules and regulations must be submitted with the plan. Submittal of a plan setting forth proposed rules and regulations will not satisfy the requirements of this section nor will it be considered a timely submittal.

[51 FR 40674, Nov. 7, 1986]

§ 51.285 Public notification.

By March 1, 1980, the State shall submit a plan revision that contains provisions for:

(a) Notifying the public on a regular basis of instances or areas in which any primary standard was exceeded during any portion of the preceeding calendar year,

(b) Advising the public of the health hazards associated with such an exceedance of a primary standard, and

(c) Increasing public awareness of:

(1) Measures which can be taken to prevent a primary standard from being exceeded, and

(2) Ways in which the public can participate in regulatory and other efforts to improve air quality.

[44 FR 27569, May 10, 1979]

Subpart P—Protection of Visibility

AUTHORITY: Secs. 110, 114, 121, 160–169, 169A, and 301 of the Clean Air Act, (42 U.S.C. 7410, 7414, 7421, 7470–7479, and 7601).

SOURCE: 45 FR 80089, Dec. 2, 1980, unless otherwise noted.

§ 51.300 Purpose and applicability.

(a) *Purpose.* The primary purposes of this subpart are (1) to require States to develop programs to assure reasonable progress toward meeting the national goal of preventing any future, and remedying and existing, impairment of visibility in mandatory Class I Federal areas which impairment results from man-made air pollution, and (2) to establish necessary additional procedures for new source permit applicants, States, and Federal Land Managers to use in conducting the visibility impact analysis required for new sources under § 51.24.

(b) *Applicability.* (1) The provisions of this subpart are applicable to:

(i) Each State which has a mandatory Class I Federal area identified in part 81, subpart D, of this title, and (ii) each State in which there is any source the emissions from which may reasonably be anticipated to cause or contribute to any impairment of visibility in any such area.

(2) The provisions of this subpart are applicable to the following States:

(i) Alabama
(ii) Alaska
(iii) Arizona
(iv) Arkansas
(v) California
(vi) Colorado
(vii) Florida
(viii) Georgia
(ix) Hawaii
(x) Idaho
(xi) Kentucky
(xii) Louisiana
(xiii) Maine
(xiv) Michigan
(xv) Minnesota
(xvi) Missouri
(xvii) Montana
(xviii) Nevada
(xix) New Hampshire
(xx) New Jersey
(xxi) New Mexico
(xxii) North Carolina
(xxiii) North Dakota
(xxiv) Oklahoma
(xxv) Oregon
(xxvi) South Carolina
(xxvii) South Dakota
(xxviii) Tennessee
(xxix) Texas
(xxx) Utah
(xxxi) Vermont
(xxxii) Virginia
(xxxiii) Virgin Islands
(xxxiv) Washington
(xxxv) West Virginia
(xxxvi) Wyoming

§ 51.301 Definitions.

For purposes of this subpart:

(a) *Adverse impact on visibility* means, for purposes of section 307, visibility impairment which interferes with the management, protection, preservation, or enjoyment of the visitor's visual experience of the Federal Class I area. This determination must be made on a case-by-case basis taking into account the geographic extent, intensity, duration, frequency and time of visibility impairments, and how these factors correlate with (1) times of visitor use of the Federal Class I area, and (2) the frequency and timing of natural conditions that reduce visibility. This term does not include effects on integral vistas.

(b) *Agency* means the U.S. Environmental Protection Agency.

(c) *Best Available Retrofit Technology (BART)* means an emission limitation based on the degree of reduction

achievable through the application of the best system of continuous emission reduction for each pollutant which is emitted by an existing stationary facility. The emission limitation must be established, on a case-by-case basis, taking into consideration the technology available, the costs of compliance, the energy and nonair quality environmental impacts of compliance, any pollution control equipment in use or in existence at the source, the remaining useful life of the source, and the degree of improvement in visibility which may reasonably be anticipated to result from the use of such technology.

(d) *Building, structure, or facility* means all of the pollutant-emitting activities which belong to the same industrial grouping, are located on one or more contiguous or adjacent properties, and are under the control of the same person (or persons under common control). Pollutant-emitting activities must be considered as part of the same industrial grouping if they belong to the same *Major Group* (i.e., which have the same two-digit code) as described in the *Standard Industrial Classification Manual, 1972* as amended by the 1977 Supplement (U.S. Government Printing Office stock numbers 4101–0066 and 003–005–00176–0 respectively).

(e) *Existing stationary facility* means any of the following stationary sources of air pollutants, including any reconstructed source, which was not in operation prior to August 7, 1962, and was in existence on August 7, 1977, and has the potential to emit 250 tons per year or more of any air pollutant. In determining potential to emit, fugitive emissions, to the extent quantifiable, must be counted.

(1) Fossil-fuel fired steam electric plants of more than 250 million British thermal units per hour heat input,

(2) Coal cleaning plants (thermal dryers),

(3) Kraft pulp mills,

(4) Portland cement plants,

(5) Primary zinc smelters,

(6) Iron and steel mill plants,

(7) Primary aluminum ore reduction plants,

(8) Primary copper smelters,

(9) Municipal incinerators capable of charging more than 250 tons of refuse per day,

(10) Hydrofluoric, sulfuric, and nitric acid plants,

(11) Petroleum refineries,

(12) Lime plants,

(13) Phosphate rock processing plants,

(14) Coke oven batteries,

(15) Sulfur recovery plants,

(16) Carbon black plants (furnace process),

(17) Primary lead smelters,

(18) Fuel conversion plants,

(19) Sintering plants,

(20) Secondary metal production facilities,

(21) Chemical process plants,

(22) Fossil-fuel boilers of more than 250 million British thermal units per hour heat input,

(23) Petroleum storage and transfer facilities with a capacity exceeding 300,000 barrels,

(24) Taconite ore processing facilities,

(25) Glass fiber processing plants, and

(26) Charcoal production facilities.

(f) *Federal Class I area* means any Federal land that is classified or reclassified *Class I*.

(g) *Federal Land Manager* means the Secretary of the department with authority over the Federal Class I area or, with respect to Roosevelt-Campobello International Park, the Chairman of the Roosevelt-Campobello International Park Commission.

(h) *Federally enforceable* means all limitations and conditions which are enforceable by the Administrator under the Clean Air Act including those requirements developed pursuant to parts 60 and 61 of this title, requirements within any applicable State Implementation Plan, and any permit requirements established pursuant to § 52.21 of this chapter or under regulations approved pursuant to part 51, 52, or 60 of this title.

(i) *Fixed capital cost* means the capital needed to provide all of the depreciable components.

(j) *Fugitive Emissions* means those emissions which could not reasonably pass through a stack, chimney, vent, or other functionally equivalent opening.

(k) *In existence* means that the owner or operator has obtained all necessary preconstruction approvals or permits required by Federal, State, or local air pollution emissions and air quality laws or regulations and either has (1) begun, or caused to begin, a continuous program of physical on-site construction of the facility or (2) entered into binding agreements or contractual obligations, which cannot be cancelled or modified without substantial loss to the owner or operator, to undertake a program of construction of the facility to be completed in a reasonable time.

(l) *Installation* means an identifiable piece of process equipment.

(m) *In operation* means engaged in activity related to the primary design function of the source.

(n) *Integral vista* means a view perceived from within the mandatory Class I Federal area of a specific landmark or panorama located outside the boundary of the mandatory Class I Federal area.

(o) *Mandatory Class I Federal Area* means any area identified in part 81, subpart D of this title.

(p) *Major Stationary Source* and *major modification* mean *major stationary source* and *major modification,* respectively, as defined in § 51.24.

(q) *Natural conditions* includes naturally occurring phenomena that reduce visibility as measured in terms of visual range, contrast, or coloration.

(r) *Potential to emit* means the maximum capacity of a stationary source to emit a pollutant under its physical and operational design. Any physical or operational limitation on the capacity of the source to emit a pollutant including air pollution control equipment and restrictions on hours of operation or on the type or amount of material combusted, stored, or processed, shall be treated as part of its design if the limitation or the effect it would have on emissions is federally enforceable. Secondary emissions do not count in determining the potential to emit of a stationary source.

(s) *Reasonably attributable* means attributable by visual observation or any other technique the State deems appropriate.

(t) *Reconstruction* will be presumed to have taken place where the fixed capital cost of the new component exceeds 50 percent of the fixed capital cost of a comparable entirely new source. Any final decision as to whether reconstruction has occurred must be made in accordance with the provisions of § 60.15 (f) (1) through (3) of this title.

(u) *Secondary emissions* means emissions which occur as a result of the construction or operation of an existing stationary facility but do not come from the existing stationary facility. Secondary emissions may include, but are not limited to, emissions from ships or trains coming to or from the existing stationary facility.

(v) *Significant impairment* means, for purposes of section 303, visibility impairment which, in the judgment of the Administrator, interferes with the management, protection, preservation, or enjoyment of the visitor's visual experience of the mandatory Class I Federal area. This determination must be made on a case-by-case basis taking into account the geographic extent, intensity, duration, frequency and time of the visibility impairment, and how these factors correlate with (1) times of visitor use of the mandatory Class I Federal area, and (2) the frequency and timing of natural conditions that reduce visibility.

(w) *Stationary Source* means any building, structure, facility, or installation which emits or may emit any air pollutant.

(x) *Visibility impairment* means any humanly perceptible change in visibility (visual range, contrast, coloration) from that which would have existed under natural conditions.

(y) *Visibility in any mandatory Class I Federal area* includes any integral vista associated with that area.

§ 51.302 Implementation control strategies.

(a) *Plan Revision Procedures.* (1) Each State identified in section 300(b)(2) must submit, no later than nine months from the date of promulgation of this regulation, an implementation plan revision meeting the requirements of this subpart.

(2) (i) The State, prior to adoption of any implementation plan required by this subpart, must conduct one or more

public hearings on such plan in accordance with § 51.4.

(ii) In addition to the requirements in § 51.4, the State must provide written notification of such hearings to each affected Federal Land Manager, and other affected States, and must state where the public can inspect a summary prepared by the Federal Land Managers of their conclusions and recommendations, if any, on the proposed plan.

(3) Submission of plans as required by this subpart must be conducted in accordance with the procedures in § 51.5.

(b) *State and Federal Land Manager Coordination.* (1) The State must identify to the Federal Land Managers, in writing and within 30 days of the date of promulgation of these regulations, the title of the official to which the Federal Land Manager of any mandatory Class I Federal area can submit a recommendation on the implementation of this subpart including, but not limited to:

(i) A list of integral vistas that are to be listed by the State for the purpose of implementing section 304,

(ii) Identification of impairment of visibility in any mandatory Class I Federal area(s), and

(iii) Identification of elements for inclusion in the visibility monitoring strategy required by section 305.

(2) The State must provide opportunity for consultation, in person and at least 60 days prior to holding any public hearing on the plan, with the Federal Land Manager on the proposed SIP revision required by this subpart. This consultation must include the opportunity for the affected Federal Land Managers to discuss their:

(i) Assessment of impairment of visibility in any mandatory Class I Federal area, and

(ii) Recommendations on the development of the long-term strategy.

(3) The plan must provide procedures for continuing consultation between the State and Federal Land Manager on the implementation of the visibility protection program required by this subpart.

(c) *General Plan Requirements.* (1) The affected Federal Land Manager may certify to the State, at any time, that there exists impairment of visibility in any mandatory Class I Federal area.

(2) The plan must contain:

(i) A long-term (10–15 years) strategy, as specified in section 305 and section 306, including such emission limitations, schedules of compliance, and such other measures including schedules for the implementation of the elements of the long-term strategy as may be necessary to make reasonable progress toward the national goal specified in section 300(a).

(ii) An assessment of visibility impairment and a discussion of how each element of the plan relates to the preventing of future or remedying of existing impairment of visibility in any mandatory Class I Federal area within the State.

(iii) Emission limitations representing BART and schedules for compliance with BART for each existing stationary facility identified according to paragraph (c)(4) of this section.

(3) The plan must require each source to maintain control equipment required by this subpart and establish procedures to ensure such control equipment is properly operated and maintained.

(4) For any existing visibility impairment the Federal Land Manager certifies to the State under paragraph (c)(1) of this section, at least 6 months prior to plan submission:

(i) The State must identify and analyze for BART each existing stationary facility which may reasonably be anticipated to cause or contribute to impairment of visibility in any mandatory Class I Federal area where the impairment in the mandatory Class I Federal area is reasonably attributable to that existing stationary facility. The State need not consider any integral vista the Federal Land Manager did not identify pursuant to section 304(b) at least 6 months before plan submission.

(ii) If the State determines that technologicial or economic limitations on the applicability of measurement methodology to a particular existing stationary facility would make the imposition of an emission standard infeasible it may instead prescribe a design, equipment, work practice, or other operational standard, or combination

thereof, to require the application of BART. Such standard, to the degree possible, is to set forth the emission reduction to be achieved by implementation of such design, equipment, work practice or operation, and must provide for compliance by means which achieve equivalent results.

(iii) BART must be determined for fossil-fuel fired generating plants having a total generating capacity in excess of 750 megawatts pursuant to ''Guidelines for Determining Best Available Retrofit Technology for Coal-fired Power Plants and Other Existing Stationary Facilities'' (1980), which is incorporated by reference, exclusive of appendix E, which was published in the FEDERAL REGISTER on February 6, 1980 (45 FR 8210). It is EPA publication No. 450/3–80–009b and is for sale from the U.S. Department of Commerce, National Technical Information Service, 5285 Port Royal Road, Springfield, Virginia 22161. It is also available for inspection at the Office of the Federal Register Information Center, 800 North Capitol NW., suite 700, Washington, DC.

(iv) The plan must require that each existing stationary facility required to install and operate BART do so as expeditiously as practicable but in no case later than five years after plan approval.

(v) The plan must provide for a BART analysis of any existing stationary facility that might cause or contribute to impairment of visibility in any mandatory Class I Federal area identified under this paragraph (c)(4) at such times, as determined by the Administrator, as new technology for control of the pollutant becomes reasonably available if:

(A) The pollutant is emitted by that existing stationary facility,

(B) Controls representing BART for the pollutant have not previously been required under this subpart, and

(C) The impairment of visibility in any mandatory Class I Federal area is reasonably attributable to the emissions of that pollutant.

[45 FR 80089, Dec. 2, 1980, as amended at 57 FR 40042, Sept. 1, 1992]

§ 51.303 Exemptions from control.

(a) (1) Any existing stationary facility subject to the requirement under section 302 to install, operate, and maintain BART may apply to the Administrator for an exemption from that requirement.

(2) An application under this section must include all available documentation relevant to the impact of the source's emissions on visibility in any mandatory Class I Federal area and a demonstration by the existing stationary facility that it does not or will not, by itself or in combination with other sources, emit any air pollutant which may be reasonably anticipated to cause or contribute to a significant impairment of visibility in any mandatory Class I Federal area.

(b) Any fossil-fuel fired power plant with a total generating capacity of 750 megawatts or more may receive an exemption from BART only if the owner or operator of such power plant demonstrates to the satisfaction of the Administrator that such power plant is located at such a distance from all mandatory Class I Federal areas that such power plant does not or will not, by itself or in combination with other sources, emit any air pollutant which may reasonably be anticipated to cause or contribute to significant impairment of visibility in any such mandatory Class I Federal area.

(c) Application under this section 303 must be accompanied by a written concurrence from the State with regulatory authority over the source.

(d) The existing stationary facility must give prior written notice to all affected Federal Land Managers of any application for exemption under this section 303.

(e) The Federal Land Manager may provide an initial recommendation or comment on the disposition of such application. Such recommendation, where provided, must be part of the exemption application. This recommendation is not to be construed as the concurrence required under paragraph (h) of this section.

(f) The Administrator, within 90 days of receipt of an application for exemption from control, will provide notice of receipt of an exemption application

and notice of opportunity for public hearing on the application.

(g) After notice and opportunity for public hearing, the Administrator may grant or deny the exemption. For purposes of judicial review, final EPA action on an application for an exemption under this section 303 will not occur until EPA approves or disapproves the State Implementation Plan revision.

(h) An exemption granted by the Administrator under this section 303 will be effective only upon concurrence by all affected Federal Land Managers with the Administrator's determination.

§ 51.304 Identification of integral vistas.

(a) On or before December 31, 1985 the Federal Land Manager may identify any integral vista. The integral vista must be identified according to criteria the Federal Land Manager develops. These criteria must include, but are not limited to, whether the integral vista is important to the visitor's visual experience of the mandatory Class I Federal area. Adoption of criteria must be preceded by reasonable notice and opportunity for public comment on the proposed criteria.

(b) The Federal Land Manager must notify the State of any integral vistas identified under paragraph (a) of this section, and the reasons therefor.

(c) The State must list in its implementation plan any integral vista the Federal Land Manager identifies at least six months prior to plan submission, and must list in its implementation plan at its earliest opportunity, and in no case later than at the time of the periodic review of the SIP required by section 306(c), any integral vista the Federal Land Manager identifies after that time.

(d) The State need not in its implementation plan list any integral vista the indentification of which was not made in accordance with the criteria in paragraph (a) of this section. In making this finding, the State must carefully consider the expertise of the Federal Land Manager in making the judgments called for by the criteria for identification. Where the State and the Federal Land Manager disagree on the identification of any integral vista, the State must give the Federal Land Manager an opportunity to consult with the Governor of the State.

§ 51.305 Monitoring.

(a) The State must include in the plan a strategy for evaluating visibility in any mandatory Class I Federal area by visual observation or other appropriate monitoring techniques. Such strategy must take into account current and anticipated visibility monitoring research, the availability of appropriate monitoring techniques, and such guidance as is provided by the Agency.

(b) The plan must provide for the consideration of available visibility data and must provide a mechanism for its use in decisions required by this subpart.

§ 51.306 Long-term strategy.

(a) (1) Each plan must include a long-term (10–15 years) strategy for making reasonable progress toward the national goal specified in section 300(a). This strategy must cover any existing impairment the Federal Land Manager certifies to the State at least 6 months prior to plan submission, and any integral vista of which the Federal Land Manager notifies the State at least 6 months prior to plan submission.

(2) A long-term strategy must be developed for each mandatory Class I Federal area located within the State and each mandatory Class I Federal area located outside the State which may be affected by sources within the State. This does not preclude the development of a single comprehensive plan for all such areas.

(3) The plan must set forth with reasonable specificity why the long-term strategy is adequate for making reasonable progress toward the national visibility goal, including remedying existing and preventing future impairment.

(b) The State must coordinate its long-term strategy for an area with existing plans and goals, including those provided by the affected Federal Land Managers, that may affect impairment of visibility in any mandatory Class I Federal area.

(c) The plan must provide for periodic review and revision, as appropriate, of the long-term strategy not less frequent than every three years. This review process must include consultation with the appropriate Federal Land Managers, and the State must provide a report to the public and the Administrator on progress toward the national goal. This report must include an assessment of:

(1) The progress achieved in remedying existing impairment of visibility in any mandatory Class I Federal area;

(2) The ability of the long-term strategy to prevent future impairment of visibility in any mandatory Class I Federal area;

(3) Any change in visibility since the last such report, or, in the case of the first report, since plan approval;

(4) Additional measures, including the need for SIP revisions, that may be necessary to assure reasonable progress toward the national visibility goal;

(5) The progress achieved in implementing BART and meeting other schedules set forth in the long-term strategy;

(6) The impact of any exemption granted under section 303;

(7) The need for BART to remedy existing visibility impairment of any integral vista listed in the plan since the last such report, or, in the case of the first report, since plan approval.

(d) The long-term strategy must provide for review of the impacts from any new major stationary source or major modifications on visibility in any mandatory Class I Federal area. This review of major stationary sources or major modifications must be in accordance with section 307, § 51.24, § 51.18 and any other binding guidance provided by the Agency insofar as these provisions pertain to protection of visibility in any mandatory Class I Federal areas.

(e) The State must consider, at a minimum, the following factors during the development of its long-term strategy:

(1) Emission reductions due to ongoing air pollution control programs,

(2) Additional emission limitations and schedules for compliance,

(3) Measures to mitigate the impacts of construction activities,

(4) Source retirement and replacement schedules,

(5) Smoke management techniques for agricultural and forestry management purposes including such plans as currently exist within the State for these purposes, and

(6) Enforceability of emission limitations and control measures.

(f) The plan must discuss the reasons why the above and other reasonable measures considered in the development of the long-term strategy were or were not adopted as part of the long-term strategy.

(g) The State, in developing the long-term strategy, must take into account the effect of new sources, and the costs of compliance, the time necessary for compliance, the energy and nonair quality environmental impacts of compliance, and the remaining useful life of any affected existing source and equipment therein.

§ 51.307 New source review.

(a) For purposes of new source review of any new major stationary source or major modification that would be constructed in an area that is designated attainment or unclassified under section 107(d)(1)(D) or (E) of the Clean Air Act, the State plan must, in any review under § 51.24 with respect to visibility protection and analyses, provide for:

(1) Written notification of all affected Federal Land Managers of any proposed new major stationary source or major modification that may affect visibility in any Federal Class I area. Such notification must be made in writing and include a copy of all information relevant to the permit application within 30 days of receipt of and at least 60 days prior to public hearing by the State on the application for permit to construct. Such notification must include an analysis of the anticipated impacts on visibility in any Federal Class I area,

(2) Where the State requires or receives advance notification (e.g. early consultation with the source prior to submission of the application or notification of intent to monitor under § 51.24) of a permit application of a source that may affect visibility the State must notify all affected Federal

Land Managers within 30 days of such advance notification, and

(3) Consideration of any analysis performed by the Federal Land Manager, provided within 30 days of the notification and analysis required by paragraph (a)(1) of this section, that such proposed new major stationary source or major modification may have an adverse impact on visibility in any Federal Class I area. Where the State finds that such an analysis does not demonstrate to the satisfaction of the State that an adverse impact will result in the Federal Class I area, the State must, in the notice of public hearing, either explain its decision or give notice as to where the explanation can be obtained.

(b) The plan shall also provide for the review of any new major stationary source or major modification:

(1) That may have an impact on any integral vista of a mandatory Class I Federal area, if it is identified in accordance with section 304 by the Federal Land Manager at least 12 months before submission of a complete permit application, except where the Federal Land Manager has provided notice and opportunity for public comment on the integral vista in which case the review must include impacts on any integral vista identified at least 6 months prior to submission of a complete permit application, unless the State determines under section 304(d) that the identification was not in accordance with the identification criteria, or

(2) That proposes to locate in an area classified as nonattainment under section 107(d)(1)(A), (B), or (C) of the Clean Air Act that may have an impact on visibility in any mandatory Class I Federal area.

(c) Review of any major stationary source or major modification under paragraph (b) of this section, shall be conducted in accordance with paragraph (a) of this section, and §51.24(o), (p) (1) through (2), and (q). In conducting such reviews the State must ensure that the source's emissions will be consistent with making reasonable progress toward the national visibility goal referred to in section 300(a). The State may take into account the costs of compliance, the time necessary for compliance, the energy and nonair quality environmental impacts of compliance, and the useful life of the source.

(d) The State may require monitoring of visibility in any Federal Class I area near the proposed new stationary source or major modification for such purposes and by such means as the State deems necessary and appropriate.

Subpart Q—Reports

AUTHORITY: Secs. 110, 301(a), 313, 319, Clean Air Act (42 U.S.C. 7410, 7601(a), 7613, 7619).

SOURCE: 44 FR 27569, May 10, 1979, unless otherwise noted.

AIR QUALITY DATA REPORTING

§51.320 Annual air quality data report.

The requirements for reporting air quality data collected for purposes of the plan are located in subpart C of part 58 of this chapter.

SOURCE EMISSIONS AND STATE ACTION REPORTING

§51.321 Annual source emissions and State action report.

On an annual (calendar year) basis beginning with calendar year 1979, the State agency shall report to the Administrator (through the appropriate Regional Office) information as specified in §§51.323 through 51.326. Reports must be submitted by July 1 of each year for data collected and actions which took place during the period January 1 to December 31 of the previous year.

§51.322 Sources subject to emissions reporting.

(a) Point sources subject to the annual emissions reporting requirements of §51.321 are defined as follows:

(1) For particulate matter, PM_{10}, sulfur oxides, VOC and nitrogen oxides, any facility that actually emits a total of 90.7 metric tons (100 tons) per year or more of any one pollutant. For particulate matter emissions, the reporting requirement ends with the reporting of calendar year 1987 emissions. For PM_{10} emissions, the reporting requirement begins with the reporting of calendar year 1988 emissions.

(2) For carbon monoxide, any facility that actually emits a total of 907 metric tons (1000 tons) per year or more.

(3) For lead or lead compounds measured as elemental lead, any facility that actually emits a total of 4.5 metric tons (5 tons) per year or more.

(b) Annual emissions reporting requirements apply only to emissions of each pollutant from any individual emission point within the facility that emits:

(1) For particulate matter, PM_{10}, sulfur oxides, VOC and nitrogen oxides. 22.7 metric tons (25 tons) per year or more. For particulate matter, the reporting requirement ends with the reporting of calendar year 1987 emissions. For PM_{10}, the reporting requirement begins with the reporting of calendar year 1988 emissions.

(2) For carbon monoxide, 227 metric tons (250 tons) per year or more.

(3) For lead or lead compounds measured as elemental lead, 4.5 metric tons (5 tons) per year or more.

[44 FR 27569, May 10, 1979, as amended at 44 FR 65070, Nov. 9, 1979; 52 FR 24714, July 1, 1987]

§ 51.323 Reportable emissions data and information.

(a) The State shall submit in the annual report the following emissions data and information:

(1) Emissions of particulate matter, sulfur oxides, carbon monoxide, nitrogen oxides, and VOC as specified by AEROS Users Manual, Vol. II (EPA 450/2–76–029, OAQPS No. 1.2–039) to be coded into the National Emissions Data System point source coding form,

(2) Emissions of lead or lead compounds measured as elemental lead as specified by AEROS Users Manual, Vol. II (EPA 45/2–76–029, OAQPS No. 1.2–039) to be coded into the Hazardous and Trace Emissions System points source coding forms, and

(3) Emissions of PM_{10} as will be specified in a future guideline.

(b) Such emissions data and information specified in paragraph (a) of this section must be submitted on either paper forms, punched cards, or magnetic tape in the format of the NEDS point source coding forms or the HATREMS point source coding forms as appropriate.

(c) The emissions data and information specified by paragraph (a) of this section must be submitted in the annual report for any point source for which one or more of the following conditions occurs:

(1) A source achieves compliance at any time within the reporting period with any regulation of an applicable plan,

(2) A new or modified source receives approval to construct during the reporting period or begins operating during the reporting period,

(3) A source ceases operations during the reporting period, or

(4) A source's emissions have changed more than 5% from the most recently submitted emissions data.

(d) If, as determined by the State and the Regional Administrator, the emissions from any point source have not changed more than 5% from the most recently submitted emissions data, the State shall update the year of record of the previously reported data and information specified by paragraph (a) of this section.

[44 FR 27569, May 10, 1979, as amended at 52 FR 24714, July 1, 1987]

§ 51.324 Progress in plan enforcement.

(a) For each point source, the State shall report any achievement made during the reporting period of any increment of progress of compliance schedules required by:

(1) The applicable plan, or

(2) Any enforcement order or other State action required to be submitted pursuant to § 51.327.

(b) For each point source, the State shall report any enforcement action taken during the reporting period and not submitted under § 51.327 which results in civil or criminal penalties.

§ 51.326 Reportable revisions.

The State shall identify and describe all substantive plan revisions during the reporting period of the applicable plan other than revisions to rules and regulations or compliance schedules submitted in accordance with § 51.6(d). Substantive revisions shall include but are not limited to changes in stack-test procedures for determining compliance with applicable regulations, modifications in the projected total

manpower needs to carry out the approved plan, and all changes in responsibilities given to local agencies to carry out various portions of the plan.

§ 51.327 Enforcement orders and other State actions.

(a) Any State enforcement order, including any State court order, must be submitted to the Administrator within 60 days of its issuance or adoption by the State.

(b) A State enforcement order or other State action must be submitted as a revision to the applicable implementation plan pursuant to § 51.104 and approved by the Administrator in order to be considered a revision to such plan.

[36 FR 22398, Nov. 25, 1971, as amended at 51 FR 40675, Nov. 7, 1986]

§ 51.328 [Reserved]

Subpart R—Extensions

§ 51.341 Request for 18-month extension.

(a) Upon request of the State made in accordance with this section, the Administrator may, whenever he determines necessary, extend, for a period not to exceed 18 months, the deadline for submitting that portion of a plan that implements a secondary standard.

(b) Any such request must show that attainment of the secondary standards will require emission reductions exceeding those which can be achieved through the application of reasonably available control technology.

(c) Any such request for extension of the deadline with respect to any State's portion of an interstate region must be submitted jointly with requests for such extensions from all other States within the region or must show that all such States have been notified of such request.

(d) Any such request must be submitted sufficiently early to permit development of a plan prior to the deadline in the event that such request is denied.

[51 FR 40675, Nov. 7, 1986]

Subpart S—Inspection/Maintenance Program Requirements

SOURCE: 57 FR 52987, Nov. 5, 1992, unless otherwise noted.

§ 51.350 Applicability.

Inspection/maintenance (I/M) programs are required in both ozone and carbon monoxide (CO) nonattainment areas, depending upon population and nonattainment classification or design value.

(a) *Nonattainment area classification and population criteria.* (1) States or areas within an ozone transport region shall implement enhanced I/M programs in any metropolitan statistical area (MSA), or portion of an MSA, within the state or area with a 1990 population of 100,000 or more as defined by the Office of Management and Budget (OMB) regardless of the area's attainment classification. In the case of a multi-state MSA, enhanced I/M shall be implemented in all ozone transport region portions if the sum of these portions has a population of 100,000 or more, irrespective of the population of the portion in the individual ozone transport region state or area.

(2) Apart from those areas described in paragraph (a)(1) of this section, any area classified as serious or worse ozone nonattainment, or as moderate or serious CO nonattainment with a design value greater than 12.7 ppm, and having a 1980 Bureau of Census-defined (Census-defined) urbanized area population of 200,000 or more, shall implement enhanced I/M in the 1990 Census-defined urbanized area.

(3) Any area classified, as of November 5, 1992, as marginal ozone nonattainment or moderate CO nonattainment with a design value of 12.7 ppm or less shall continue operating I/M programs that were part of an approved State Implementation Plan (SIP) as of November 15, 1990, and shall update those programs as necessary to meet the basic I/M program requirements of this subpart. Any such area required by the Clean Air Act, as in effect prior to November 15, 1990, as interpreted in EPA guidance, to have an I/M program shall also implement a basic I/M program. Serious, severe and extreme ozone areas and CO areas over 12.7 ppm

shall also continue operating existing I/M programs and shall upgrade such programs, as appropriate, pursuant to this subpart.

(4) Any area classified as moderate ozone nonattainment, and not required to implement enhanced I/M under paragraph (a)(1) of this section, shall implement basic I/M in any 1990 Census-defined urbanized area with a population of 200,000 or more.

(5) [Reserved]

(6) If the boundaries of a moderate ozone nonattainment area are changed pursuant to section 107(d)(4)(A)(i)-(ii) of the Clean Air Act, such that the area includes additional urbanized areas with a population of 200,000 or more, then a basic I/M program shall be implemented in these additional urbanized areas.

(7) If the boundaries of a serious or worse ozone nonattainment area or of a moderate or serious CO nonattainment area with a design value greater than 12.7 ppm are changed any time after enactment pursuant to section 107(d)(4)(A) such that the area includes additional urbanized areas, then an enhanced I/M program shall be implemented in the newly included 1990 Census-defined urbanized areas, if the 1980 Census-defined urban area population is 200,000 or more.

(8) If a marginal ozone nonattainment area, not required to implement enhanced I/M under paragraph (a)(1) of this section, is reclassified to moderate, a basic I/M program shall be implemented in the 1990 Census-defined urbanized area(s) with a population of 200,000 or more. If the area is reclassified to serious or worse, an enhanced I/M program shall be implemented in the 1990 Census-defined urbanized area, if the 1980 Census-defined urban area population is 200,000 or more.

(9) If a moderate ozone or CO nonattainment area is reclassified to serious or worse, an enhanced I/M program shall be implemented in the 1990 Census-defined urbanized area, if the 1980 Census-defined population is 200,000 or more.

(b) *Extent of area coverage.* (1) In an ozone transport region, the program shall entirely cover all counties within subject MSAs or subject portions of MSAs, as defined by OMB in 1990, except largely rural counties having a population density of less than 200 persons per square mile based on the 1990 Census can be excluded provided that at least 50% of the MSA population is included in the program. This provision does not preclude the voluntary inclusion of portions of an excluded rural county. Non-urbanized islands not connected to the mainland by roads, bridges, or tunnels may be excluded without regard to population.

(2) Outside of ozone transport regions, programs shall nominally cover at least the entire urbanized area, based on the 1990 census. Exclusion of some urban population is allowed as long as an equal number of non-urban residents of the MSA containing the subject urbanized area are included to compensate for the exclusion.

(3) Emission reduction benefits from expanding coverage beyond the minimum required urban area boundaries can be applied toward the reasonable further progress requirements or can be used for offsets, provided the covered vehicles are operated in the nonattainment area, but not toward the enhanced I/M performance standard requirement.

(4) In a multi-state urbanized area with a population of 200,000 or more that is required under paragraph (a) of this section to implement I/M, any state with a portion of the area having a 1990 Census-defined population of 50,000 or more shall implement an I/M program. The other coverage requirements in paragraph (b) of this section shall apply in multi-state areas as well.

(c) *Requirements after attainment.* All I/M programs shall provide that the program will remain effective, even if the area is redesignated to attainment status, until the state submits and EPA approves a maintenance plan, under section 175A, which convincingly demonstrates that the area can maintain the relevant standard for the maintenance period without benefit of the emission reductions attributable to the I/M program. The state shall commit to fully implement and enforce the program throughout such period, and, at a minimum, for the purposes of SIP approval, legislation authorizing the program shall not sunset prior to the attainment deadline.

(d) *SIP requirements.* The SIP shall describe the applicable areas in detail and, consistent with § 51.372 of this subpart, shall include the legal authority or rules necessary to establish program boundaries.

[57 FR 52987, Nov. 5, 1992, as amended at 60 FR 48034, Sept. 18, 1995]

§ 51.351 Enhanced I/M performance standard.

(a) Enhanced I/M programs shall be designed and implemented to meet or exceed a minimum performance standard, which is expressed as emission levels in area-wide average grams per mile (gpm), achieved from highway mobile sources as a result of the program. The emission levels achieved by the state's program design shall be calculated using the most current version, at the time of submittal, of the EPA mobile source emission factor model or an alternative model approved by the Administrator, and shall meet the minimum performance standard both in operation and for SIP approval. Areas shall meet the performance standard for the pollutants which cause them to be subject to enhanced I/M requirements. In the case of ozone nonattainment areas subject to enhanced I/M and subject areas in the Ozone Transport Region, the performance standard must be met for both oxides of nitrogen (NO_X) and volatile organic compounds (VOCs), except as provided in paragraph (d) of this section.

(1) *Network type.* Centralized testing.

(2) *Start date.* For areas with existing I/M programs, 1983. For areas newly subject, 1995.

(3) *Test frequency.* Annual testing.

(4) *Model year coverage.* Testing of 1968 and later vehicles.

(5) *Vehicle type coverage.* Light duty vehicles, and light duty trucks, rated up to 8,500 pounds Gross Vehicle Weight Rating (GVWR).

(6) *Exhaust emission test type.* Transient mass-emission testing on 1986 and later model year vehicles using the IM240 driving cycle, two-speed testing (as described in appendix B of this subpart S) of 1981–1985 vehicles, and idle testing (as described in appendix B of this subpart S) of pre-1981 vehicles is assumed.

(7) *Emission standards.* (i) Emission standards for 1986 through 1993 model year light duty vehicles, and 1994 and 1995 light-duty vehicles not meeting Tier 1 emission standards, of 0.80 gpm hydrocarbons (HC), 20 gpm CO, and 2.0 gpm NO_x;

(ii) Emission standards for 1986 through 1993 light duty trucks less than 6000 pounds gross vehicle weight rating (GVWR), and 1994 and 1995 trucks not meeting Tier 1 emission standards, of 1.2 gpm HC, 20 gpm CO, and 3.5 gpm NO_x;

(iii) Emission standards for 1986 through 1993 light duty trucks greater than 6000 pounds GVWR, and 1994 and 1995 trucks not meeting Tier 1 emission standards, of 1.2 gpm HC, 20 gpm CO, and 3.5 gpm NO_x;

(iv) Emission standards for 1994 and later light duty vehicles meeting Tier 1 emission standards of 0.70 gpm HC, 15 gpm CO, and 1.4 gpm NO_x;

(v) Emission standards for 1994 and later light duty trucks under 6000 pounds GVWR and meeting Tier 1 emission standards of 0.70 gpm HC, 15 gpm CO and 2.0 gpm NO_X;

(vi) Emission standards for 1994 and later light duty trucks greater than 6000 pounds GVWR and meeting Tier 1 emission standards of 0.80 gpm HC, 15 gpm CO and 2.0 gpm NO_x;

(vii) Emission standards for 1981–1985 model year vehicles of 1.2% CO, and 220 ppm HC for the idle, two-speed tests and loaded steady-state tests (as described in appendix B of this subpart S); and

(viii) Maximum exhaust dilution measured as no less than 6% CO plus carbon dioxide (CO_2) on vehicles subject to a steady-state test (as described in appendix B of this subpart S).

(8) *Emission control device inspections.* Visual inspection of the catalyst and fuel inlet restrictor on all 1984 and later model year vehicles.

(9) *Evaporative system function checks.* Evaporative system integrity (pressure) test on 1983 and later model year vehicles and an evaporative system transient purge test on 1986 and later model year vehicles.

(10) *Stringency.* A 20% emission test failure rate among pre-1981 model year vehicles.

(11) *Waiver rate.* A 3% waiver rate, as a percentage of failed vehicles.

(12) *Compliance rate.* A 96% compliance rate.

(13) *Evaluation date.* Enhanced I/M programs shall be shown to obtain the same or lower emission levels as the model program by 2000 for ozone nonattainment areas and 2001 for CO nonattainment areas, and for severe and extreme ozone nonattainment areas, on each applicable milestone and attainment deadline, thereafter. Milestones for NO_x shall be the same as for ozone.

(b) *On-road testing.* The performance standard shall include on-road testing of at least 0.5% of the subject vehicle population, or 20,000 vehicles whichever is less, as a supplement to the periodic inspection required in paragraphs (f) and (g) of this section. Specific requirements are listed in § 51.371 of this subpart.

(c) *On-board diagnostics (OBD).* [Reserved]

(d) *Modeling requirements.* Equivalency of the emission levels which will be achieved by the I/M program design in the SIP to those of the model program described in this section shall be demonstrated using the most current version of EPA's mobile source emission model, or an alternative approved by the Administrator, using EPA guidance to aid in the estimation of input parameters. States may adopt alternative approaches that meet this performance standard. States may do so through program design changes that affect normal I/M input parameters to the mobile source emission factor model, or through program changes (such as the accelerated retirement of high emitting vehicles) that reduce in-use mobile source emissions. If the Administrator finds, under section 182(b)(1)(A)(i) of the Act pertaining to reasonable further progress demonstrations or section 182(f)(1) of the Act pertaining to provisions for major stationary sources, that NO_x emission reductions are not beneficial in a given ozone nonattainment area, then NO_x emission reductions are not required of the enhanced I/M program, but the program shall be designed to offset NO_x increases resulting from the repair of HC and CO failures.

(e) [Reserved]

(f) *High Enhanced Performance Standard.* Except as provided in paragraph (g) of this section, the model program elements for the enhanced I/M performance standard shall be as follows:

(1) *Network type.* Centralized testing.

(2) *Start date.* For areas with existing I/M programs, 1983. For areas newly subject, 1995.

(3) *Test frequency.* Annual testing.

(4) *Model year coverage.* Testing of 1968 and later vehicles.

(5) *Vehicle type coverage.* Light duty vehicles, and light duty trucks, rated up to 8,500 pounds Gross Vehicle Weight Rating (GVWR).

(6) *Exhaust emission test type.* Transient mass-emission testing on 1986 and later model year vehicles using the IM240 driving cycle, two-speed testing (as described in appendix B of this subpart S) of 1981–1985 vehicles, and idle testing (as described in appendix B of this subpart S) of pre-1981 vehicles is assumed.

(7) *Emission standards.* (i) Emission standards for 1986 through 1993 model year light duty vehicles, and 1994 and 1995 light-duty vehicles not meeting Tier 1 emission standards, of 0.80 gpm hydrocarbons (HC), 20 gpm CO, and 2.0 gpm NO_X;

(ii) Emission standards for 1986 through 1993 light duty trucks less than 6000 pounds gross vehicle weight rating (GVWR), and 1994 and 1995 trucks not meeting Tier 1 emission standards, of 1.2 gpm HC, 20 gpm CO, and 3.5 gpm NO_X;

(iii) Emission standards for 1986 through 1993 light duty trucks greater than 6000 pounds GVWR, and 1994 and 1995 trucks not meeting the Tier 1 emission standards, of 1.2 gpm HC, 20 gpm CO, and 3.5 gpm NO_X;

(iv) Emission standards for 1994 and later light duty vehicles meeting Tier 1 emission standards of 0.70 gpm HC, 15 gpm CO, and 1.4 gpm NO_X;

(v) Emission standards for 1994 and later light duty trucks under 6000 pounds GVWR and meeting Tier 1 emission standards of 0.70 gpm HC, 15 gpm CO, and 2.0 gpm NO_X;

(vi) Emission standards for 1994 and later light duty trucks greater than 6000 pounds GVWR and meeting Tier 1 emission standards of 0.80 gpm HC, 15 gpm CO and 2.5 gpm NO_X;

(vii) Emission standards for 1981–1985 model year vehicles of 1.2% CO, and 220 gpm HC for the idle, two-speed tests and loaded steady-state tests (as described in appendix B of this subpart S); and

(viii) Maximum exhaust dilution measured as no less than 6% CO plus carbon dioxide (CO_2) on vehicles subject to a steady-state test (as described in appendix B of this subpart S); and

(viii) Maximum exhaust dilution measured as no less than 6% CO plus carbon dioxide (CO_2) on vehicles subject to a steady-state test (as described in appendix B of this subpart S).

(8) *Emission control device inspections.* (i) Visual inspection of the catalyst and fuel inlet restrictor on all 1984 and later model year vehicles.

(ii) Visual inspection of the positive crankcase ventilation valve on 1968 through 1971 model years, inclusive, and of the exhaust gas recirculation valve on 1972 through 1983 model year vehicles, inclusive.

(9) *Evaporative system function checks.* Evaporative system integrity (pressure) test on 1983 and later model year vehicles and an evaporative system transient purge test on 1986 and later model year vehicles.

(10) *Stringency.* A 20% emission test failure rate among pre-1981 model year vehicles.

(11) *Waiver rate.* A 3% waiver rate, as a percentage of failed vehicles.

(12) *Compliance rate.* A 96% compliance rate.

(13) *Evaluation date.* Enhanced I/M program areas shall be shown to obtain the same or lower emission levels as the model program described in this paragraph by 2000 for ozone nonattainment areas and 2001 for CO nonattainment areas, and for severe and extreme ozone nonattainment areas, on each applicable milestone and attainment deadline, thereafter. Milestones for NO_X shall be the same as for ozone.

(g) *Alternate Low Enhanced I/M Performance Standard.* An enhanced I/M area which is either not subject to or has an approved State Implementation Plan pursuant to the requirements of the Clean Air Act Amendments of 1990 for Reasonable Further Progress in 1996, and does not have a disapproved plan for Reasonable Further Progress for the period after 1996 or a disapproved plan for attainment of the air quality standards for ozone or CO, may select the alternate low enhanced I/M performance standard described below in lieu of the standard described in paragraph (f) of this section. The model program elements for this alternate low enhanced I/M performance standard are:

(1) *Network type.* Centralized testing.

(2) *Start date.* For areas with existing I/M programs, 1983. For areas newly subject, 1995.

(3) *Test frequency.* Annual testing.

(4) *Model year coverage.* Testing of 1968 and newer vehicles.

(5) *Vehicle type coverage.* Light duty vehicles, and light duty trucks, rated up to 8,500 pounds GVWR.

(6) *Exhaust emission test type.* Idle testing of all covered vehicles (as described in appendix B of subpart S).

(7) *Emission standards.* Those specified in 40 CFR Part 85, Subpart W.

(8) *Emission control device inspections.* Visual inspection of the positive crankcase ventilation valve on all 1968 through 1971 model year vehicles, inclusive, and of the exhaust gas recirculation valve on all 1972 and newer model year vehicles.

(9) *Evaporative system function checks.* None.

(10) *Stringency.* A 20% emission test failure rate among pre-1981 model year vehicles.

(11) *Waiver rate.* A 3% waiver rate, as a percentage of failed vehicles.

(12) Compliance rate. A 96% compliance rate.

(13) Evaluation date. Enhanced I/M program areas subject to the provisions of this paragraph shall be shown to obtain the same or lower emission levels as the model program described in this paragraph by 2000 for ozone nonattainment areas and 2001 for CO nonattainment areas, and for severe and extreme ozone nonattainment areas, on each applicable milestone and attainment deadline, thereafter. Milestones for NO_x shall be the same as for ozone.

[57 FR 52987, Nov. 5, 1992, as amended at 58 FR 59367, Nov. 9, 1993; 59 FR 32343, June 23, 1994; 60 FR 48035, Sept. 18, 1995]

§ 51.352 Basic I/M performance standard.

(a) Basic I/M programs shall be designed and implemented to meet or exceed a minimum performance standard, which is expressed as emission levels achieved from highway mobile sources as a result of the program. The performance standard shall be established using the following model I/M program inputs and local characteristics, such as vehicle mix and local fuel controls. Similarly, the emission reduction benefits of the state's program design shall be estimated using the most current version of the EPA mobile source emission model, and shall meet the minimum performance standard both in operation and for SIP approval.

(1) *Network type.* Centralized testing.

(2) *Start date.* For areas with existing I/M programs, 1983. For areas newly subject, 1994.

(3) *Test frequency.* Annual testing.

(4) *Model year coverage.* Testing of 1968 and later model year vehicles.

(5) *Vehicle type coverage.* Light duty vehicles.

(6) *Exhaust emission test type.* Idle test.

(7) *Emission standards.* No weaker than specified in 40 CFR Part 85, Subpart W.

(8) *Emission control device inspections.* None.

(9) *Stringency.* A 20% emission test failure rate among pre-1981 model year vehicles.

(10) *Waiver rate.* A 0% waiver rate.

(11) *Compliance rate.* A 100% compliance rate.

(12) *Evaluation date.* Basic I/M programs shall be shown to obtain the same or lower emission levels as the model inputs by 1997 for ozone nonattainment areas and 1996 for CO nonattainment areas; and, for serious or worse ozone nonattainment areas, on each applicable milestone and attainment deadline, thereafter.

(b) *Oxides of nitrogen.* Basic I/M testing in ozone nonattainment areas shall be designed such that no increase in NO_x emissions occurs as a result of the program. If the Administrator finds, under section 182(b)(1)(A)(i) of the Act pertaining to reasonable further progress demonstrations or section 182(f)(1) of the Act pertaining to provisions for major stationary sources, that NO_x emission reductions are not beneficial in a given ozone nonattainment area, then the basic I/M NO_x requirement may be omitted. States shall implement any required NO_x controls within 12 months of implementation of the program deadlines required in § 51.373 of this subpart, except that newly implemented I/M programs shall include NO_x controls from the start.

(c) *On-board diagnostics.* [Reserved]

(d) *Modeling requirements.* Equivalency of emission levels which will be achieved by the I/M program design in the SIP to those of the model program described in this section shall be demonstrated using the most current version of EPA's mobile source emission model and EPA guidance on the estimation of input parameters. Areas required to implement basic I/M programs shall meet the performance standard for the pollutants which cause them to be subject to basic requirements. Areas subject as a result of ozone nonattainment shall meet the standard for VOCs and shall demonstrate no NO_x increase, as required in paragraph (b) of this section.

§ 51.353 Network type and program evaluation.

Enhanced I/M programs shall be operated in a centralized test-only format, unless the state can demonstrate that a decentralized program is equally effective in achieving the enhanced I/M performance standard. Basic I/M programs can be centralized, decentralized, or a hybrid at the state's discretion, but shall be demonstrated to achieve the same emission reduction as the program described in § 51.352 of this subpart.

(a) *Presumptive equivalency.* A decentralized network consisting of stations that only perform official I/M testing (which may include safety-related inspections) and in which owners and employees of those stations, or companies owning those stations, are contractually or legally barred from engaging in motor vehicle repair or service, motor vehicle parts sales, and motor vehicle sale and leasing, either directly or indirectly, and are barred from referring vehicle owners to particular

providers of motor vehicle repair services (except as provided in § 51.369(b)(1) of this subpart) shall be considered equivalent to a centralized, test-only system. States may allow such stations to engage in the sale of refreshments for the use of employees and customers waiting at the station and may fulfill other functions typically carried out by the state such as renewal of vehicle registration and driver's licenses, or tax and fee collections.

(b) *Case-by-case equivalency*. (1) Credits for test-and-repair networks, i.e., those not meeting the requirements of paragraph (a) of this section, are assumed to be 50% less than those for a test-only network for the tailpipe emission test, purge test, evaporative system integrity test, catalyst check, and gas cap check; and 75% less for the evaporative canister checks, PCV check, and air system checks. Smaller reductions in credits for the various test protocols may be claimed if a state can demonstrate to the satisfaction of the Administrator that based on past performance with the specific test-type and inspection standards employed, its test-and-repair system will exceed these levels. At a minimum, such a demonstration shall include:

(i) Surveys that assess the effectiveness of repairs performed on vehicles that failed the tailpipe emission test and evaporative system tests;

(ii) In programs including tampering checks, measurement of actual tampering rates, their change over time, and the change attributable to finding and fixing such tampering as opposed to deterrence effects; and

(iii) The results of undercover surveys of inspector effectiveness as it relates to identifying vehicles that need repair.

(2) In the case of hybrid systems, which may be implemented in basic I/M areas, including both test-only and test-and-repair facilities, full credit shall apply to the portion of the fleet initially tested and subsequently retested at a test-only facility meeting the requirements of paragraph (a) of this section, and to the portion of the fleet initially tested and failed at a test-and-repair facility but subsequently passing a comprehensive retest at a test-only facility meeting those same requirements. The credit loss assumptions described in paragraph (b)(1) of this section shall apply to the portion of the fleet initially passed at a test-and-repair facility, and to the portion initially failed at a test-only facility and retested at a test-and-repair facility.

(3) Areas operating test-and-repair networks or hybrid networks may, in the future, claim greater effectiveness than described in paragraph (b)(1) of this section, if a demonstration of greater effectiveness is made to the satisfaction of the Administrator using the program evaluation protocol described in paragraph (c) of this section.

(c) *Program evaluation*. Enhanced I/M programs shall include an ongoing evaluation to quantify the emission reduction benefits of the program, and to determine if the program is meeting the requirements of the Clean Air Act and this subpart.

(1) The state shall report the results of the program evaluation on a biennial basis, starting two years after the initial start date of mandatory testing as required in § 51.373 of this subpart.

(2) The evaluation shall be considered in establishing actual emission reductions achieved from I/M for the purposes of satisfying the requirements of sections 182(g)(1) and 182(g)(2) of the Clean Air Act, relating to reductions in emissions and compliance demonstration.

(3) The evaluation program shall consist, at a minimum, of those items described in paragraph (b)(1) of this section and mass emission test data using the procedure specified in § 51.357(a)(11) of this subpart, or any other transient, mass emission test procedure approved as equivalent, and evaporative system checks, specified in § 51.357(a)(9) and (10) of this subpart, for model years subject to those evaporative system test procedures. The test data shall be obtained from a representative, random sample, taken at the time of initial inspection (before repair), of at least 0.1 percent of the vehicles subject to inspection in a given year. Such vehicles shall receive a state administered or monitored IM240 mass emission test or equivalent, as specified in this paragraph (c)(3), at the time the initial test is due.

(4) The program evaluation test data shall be submitted to EPA and used by the state to calculate local fleet emission factors, to assess the effectiveness of the I/M program, and to determine if the performance standard is being met. EPA will update its emission factor model periodically to reflect the appropriate emission reduction effectiveness of program elements within § 51.351 of this subpart based on actual performance.

(d) *SIP requirements.* (1) The SIP shall include a description of the network to be employed, the required legal authority, and, in the case of areas making claims under paragraph (b) of this section, the required demonstration.

(2) The SIP shall include a description of the evaluation schedule and protocol, the sampling methodology, the data collection and analysis system, the resources and personnel for evaluation, and related details of the evaluation program, and the legal authority enabling the evaluation program.

[57 FR 52987, Nov. 5, 1992, as amended at 58 FR 59367, Nov. 9, 1993]

§ 51.354 Adequate tools and resources.

(a) *Administrative resources.* The program shall maintain the administrative resources necessary to perform all of the program functions including quality assurance, data analysis and reporting, and the holding of hearings and adjudication of cases. A portion of the test fee or a separately assessed per vehicle fee shall be collected, placed in a dedicated fund and retained, to be used to finance program oversight, management, and capital expenditures. Alternatives to this approach shall be acceptable if the state can demonstrate that adequate funding of the program can be maintained in some other fashion (e.g., through contractual obligation along with demonstrated past performance). Reliance on future uncommitted annual or biennial appropriations from the state or local General Fund is not acceptable, unless doing otherwise would be a violation of the state's constitution. This section shall in no way require the establishment of a test fee if the state chooses to fund the program in some other manner.

(b) *Personnel.* The program shall employ sufficient personnel to effectively carry out the duties related to the program, including but not limited to administrative audits, inspector audits, data analysis, program oversight, program evaluation, public education and assistance, and enforcement against stations and inspectors as well as against motorists who are out of compliance with program regulations and requirements.

(c) *Equipment.* The program shall possess equipment necessary to achieve the objectives of the program and meet program requirements, including but not limited to a steady supply of vehicles for covert auditing, test equipment and facilities for program evaluation, and computers capable of data processing, analysis, and reporting. Equipment or equivalent services may be contractor supplied or owned by the state or local authority.

(d) *SIP requirements.* The SIP shall include a description of the resources that will be used for program operation, and discuss how the performance standard will be met.

(1) The SIP shall include a detailed budget plan which describes the source of funds for personnel, program administration, program enforcement, purchase of necessary equipment (such as vehicles for undercover audits), and any other requirements discussed throughout, for the period prior to the next biennial self-evaluation required in § 51.366 of this subpart.

(2) The SIP shall include a description of personnel resources. The plan shall include the number of personnel dedicated to overt and covert auditing, data analysis, program administration, enforcement, and other necessary functions and the training attendant to each function.

§ 51.355 Test frequency and convenience.

(a) The performance standards for I/M programs assume an annual test frequency; other schedules may be approved if the required emission targets are achieved. The SIP shall describe the test schedule in detail, including the test year selection scheme if testing is other than annual. The SIP shall include the legal authority necessary

to implement and enforce the test frequency requirement and explain how the test frequency will be integrated with the enforcement process.

(b) In enhanced I/M programs, test systems shall be designed in such a way as to provide convenient service to motorists required to get their vehicles tested. The SIP shall demonstrate that the network of stations providing test services is sufficient to insure short waiting times to get a test and short driving distances. Stations shall be required to adhere to regular testing hours and to test any subject vehicle presented for a test during its test period.

§ 51.356 Vehicle coverage.

The performance standard for enhanced I/M programs assumes coverage of all 1968 and later model year light duty vehicles and light duty trucks up to 8,500 pounds GVWR, and includes vehicles operating on all fuel types. The standard for basic I/M programs does not include light duty trucks. Other levels of coverage may be approved if the necessary emission reductions are achieved. Vehicles registered or required to be registered within the I/M program area boundaries and fleets primarily operated within the I/M program area boundaries and belonging to the covered model years and vehicle classes comprise the subject vehicles.

(a) *Subject vehicles.* (1) All vehicles of a covered model year and vehicle type shall be tested according to the applicable test schedule, including leased vehicles whose registration or titling is in the name of an equity owner other than the lessee or user.

(2) All subject fleet vehicles shall be inspected. Fleets may be officially inspected outside of the normal I/M program test facilities, if such alternatives are approved by the program administration, but shall be subject to the same test requirements using the same quality control standards as non-fleet vehicles. If all vehicles in a particular fleet are tested during one part of the cycle, then the quality control requirements shall be met during the time of testing only. Any vehicle available for rent in the I/M area or for use in the I/M area shall be subject. Fleet vehicles not being tested in normal I/M test facilities in enhanced I/M programs, however, shall be inspected in independent, test-only facilities, according to the requirements of § 51.353(a) of this subpart.

(3) Subject vehicles which are registered in the program area but are primarily operated in another I/M area shall be tested, either in the area of primary operation, or in the area of registration. Alternate schedules may be established to permit convenient testing of these vehicles (e.g., vehicles belonging to students away at college should be rescheduled for testing during a visit home). I/M programs shall make provisions for providing official testing to vehicles registered elsewhere.

(4) Vehicles which are operated on Federal installations located within an I/M program area shall be tested, regardless of whether the vehicles are registered in the state or local I/M area. This requirement applies to all employee-owned or leased vehicles (including vehicles owned, leased, or operated by civilian and military personnel on Federal installations) as well as agency-owned or operated vehicles, except tactical military vehicles, operated on the installation. This requirement shall not apply to visiting agency, employee, or military personnel vehicles as long as such visits do not exceed 60 calendar days per year. In areas without test fees collected in the lane, arrangements shall be made by the installation with the I/M program for reimbursement of the costs of tests provided for agency vehicles, at the discretion of the I/M agency. The installation shall provide documentation of proof of compliance to the I/M agency. The documentation shall include a list of subject vehicles and shall be updated periodically, as determined by the I/M program administrator, but no less frequently than each inspection cycle. The installation shall use one of the following methods to establish proof of compliance:

(i) Presentation of a valid certificate of compliance from the local I/M program, from any other I/M program at least as stringent as the local program, or from any program deemed acceptable by the I/M program administrator.

(ii) Presentation of proof of vehicle registration within the geographic area covered by the I/M program, except for any program whose enforcement is not through registration denial.

(iii) Another method approved by the state or local I/M program administrator.

(5) Special exemptions may be permitted for certain subject vehicles provided a demonstration is made that the performance standard will be met.

(b) *SIP requirements.* (1) The SIP shall include a detailed description of the number and types of vehicles to be covered by the program, and a plan for how those vehicles are to be identified, including vehicles that are routinely operated in the area but may not be registered in the area.

(2) The SIP shall include a description of any special exemptions which will be granted by the program, and an estimate of the percentage and number of subject vehicles which will be impacted. Such exemptions shall be accounted for in the emission reduction analysis.

(3) The SIP shall include the legal authority or rule necessary to implement and enforce the vehicle coverage requirement.

§ 51.357 Test procedures and standards.

Written test procedures and pass/fail standards shall be established and followed for each model year and vehicle type included in the program.

(a) *Test procedure requirements.* Emission tests and functional tests shall be conducted according to good engineering practices to assure test accuracy.

(1) Initial tests (i.e., those occurring for the first time in a test cycle) shall be performed without repair or adjustment at the inspection facility, prior to the test, except as provided in paragraph (a)(10)(i) of this section.

(2) The vehicle owner or driver shall have access to the test area such that observation of the entire official inspection process on the vehicle is permitted. Such access may be limited but shall in no way prevent full observation.

(3) An official test, once initiated, shall be performed in its entirety regardless of intermediate outcomes except in the case of invalid test condition, unsafe conditions, or fast pass/fail algorithms.

(4) Tests involving measurement shall be performed with program-approved equipment that has been calibrated accordingly to the quality procedures contained in appendix A to this subpart.

(5) Vehicles shall be rejected from testing if the exhaust system is missing or leaking, or if the vehicle is in an unsafe condition for testing.

(6) Vehicles shall be retested after repair for any portion of the inspection that is failed on the previous test to determine if repairs were effective. To the extent that repair to correct a previous failure could lead to failure of another portion of the test, that portion shall also be retested. Evaporative system repairs shall trigger an exhaust emissions retest.

(7) *Steady-state testing.* Steady-state tests shall be performed in accordance with the procedures contained in appendix B to this subpart.

(8) *Emission control device inspection.* Visual emission control device checks shall be performed through direct observation or through indirect observation using a mirror, video camera or other visual aid. These inspections shall include a determination as to whether each subject device is present and appears to be properly connected and appears to be the correct type for the certified vehicle configuration.

(9) *Evaporative system purge test procedure.* The purge test procedure shall consist of measuring the total purge flow (in standard liters) occurring in the vehicle's evaporative system during the transient dynamometer emission test specified in paragraph (a)(11) of this section. The purge flow measurement system shall be connected to the purge portion of the evaporative system in series between the canister and the engine, preferably near the canister. The inspector shall be responsible for ensuring that all items that are disconnected in the conduct of the test procedure are properly re-connected at the conclusion of the test procedure. Alternative procedures may be used if they are shown to be equivalent or better to the satisfaction of the Administrator. Except in the case of

government-run test facilities claiming sovereign immunity, any damage done to the evaporative emission control system during this test shall be repaired at the expense of the inspection facility.

(10) *Evaporative system integrity test procedure.* The test sequence shall consist of the following steps:

(i) Test equipment shall be connected to the fuel tank canister hose at the canister end. The gas cap shall be checked to ensure that it is properly, but not excessively tightened, and shall be tightened if necessary.

(ii) The system shall be pressurized to 14±0.5 inches of water without exceeding 26 inches of water system pressure.

(iii) Close off the pressure source, seal the evaporative system and monitor pressure decay for up to two minutes.

(iv) Loosen the gas cap after a maximum of two minutes and monitor for a sudden pressure drop, indicating that the fuel tank was pressurized.

(v) The inspector shall be responsible for ensuring that all items that are disconnected in the conduct of the test procedure are properly re-connected at the conclusion of the test procedure.

(vi) Alternative procedures may be used if they are shown to be equivalent or better to the satisfaction of the Administrator. Except in the case of government-run test facilities claiming sovereign immunity, any damage done to the evaporative emission control system during this test shall be repaired at the expense of the inspection facility.

(11) *Transient emission test.* The transient emission test shall consist of 240 seconds of mass emission measurement using a constant volume sampler while the vehicle is driven through a computer-monitored driving cycle on a dynamometer with inertial weight settings appropriate for the weight of the vehicle. The driving cycle shall include acceleration, deceleration, and idle operating modes as specified in appendix E to this subpart. The 240 second sequence may be ended earlier using fast pass or fast fail algorithms and multiple pass/fail algorithms may be used during the test cycle to eliminate false failures. The transient test procedure, including algorithms and other procedural details, shall be approved by the Administrator prior to use in an I/M program.

(12) *On-board diagnostic checks.* [Reserved].

(13) *Approval of alternative tests.* Alternative test procedures may be approved if the Administrator finds that—

(i) Such procedures are in accordance with good engineering practice, including errors of commission (at cutpoints corresponding to equivalent emission reductions) no higher than the tests they would replace;

(ii) Such procedures show a correlation with the Federal Test Procedure (with respect to their ability to detect high emitting vehicles and ensure their effective repair) equal to or better than the tests they would replace; and

(iii) Such procedures would produce equivalent emission reductions in combination with other program elements.

(b) *Test standards*—(1) *Emissions standards.* HC, CO, and $CO+CO_2$ (or CO_2 alone) emission standards shall be applicable to all vehicles subject to the program and repairs shall be required for failure of any standard regardless of the attainment status of the area. NO_x emission standards shall be applied to vehicles subject to a transient test in ozone nonattainment areas and in an ozone transport region, unless a waiver of NO_x controls is provided to the state under § 51.351(d) of this subpart.

(i) *Steady-state short tests.* The steady-state short test emission standards for 1981 and later model year light duty vehicles and light duty trucks shall be at least as stringent as those in appendix C to this subpart.

(ii) *Transient test.* Transient test emission standards shall be established for HC, CO, CO_2, and NO_x for subject vehicles based on model year and vehicle type.

(2) *Visual equipment inspection standards.* (i) Vehicles shall fail visual inspections of subject emission control devices if such devices are part of the original certified configuration and are found to be missing, modified, disconnected, or improperly connected.

(ii) Vehicles shall fail visual inspections of subject emission control devices if such devices are found to be incorrect for the certified vehicle configuration under inspection. Aftermarket parts, as well as original equipment manufacture parts, may be considered correct if they are proper for the certified vehicle configuration. Where an EPA aftermarket approval or self-certification program exists for a particular class of subject parts, vehicles shall fail visual equipment inspections if the part is neither original equipment manufacture nor from an approved or self-certified aftermarket manufacturer.

(3) *Functional test standards*—(i) *Evaporative system integrity test.* Vehicles shall fail the evaporative system pressure test if the system cannot maintain a system pressure above eight inches of water for up to two minutes after being pressurized to 14±0.5 inches of water or if no pressure drop is detected when the gas cap is loosened as described in paragraph (a)(10)(iv) of this section. Additionally, vehicles shall fail the evaporative test if the canister is missing or obviously damaged, if hoses are missing or obviously disconnected, or if the gas cap is missing.

(ii) *Evaporative canister purge test.* Vehicles with a total purge system flow measuring less than one liter, over the course of the transient test required in paragraph (a)(9) of this section, shall fail the evaporative purge test.

(4) *On-board diagnostics test standards.* [Reserved]

(c) *Fast test algorithms and standards.* Special test algorithms and pass/fail algorithms may be employed to reduce test time when the test outcome is predictable with near certainty, if the Administrator approves by letter the equivalency to full procedure testing.

(d) *Applicability.* In general, section 203(a)(3)(A) of the Clean Air Act prohibits altering a vehicle's configuration such that it changes from a certified to a non-certified configuration. In the inspection process, vehicles that have been altered from their original certified configuration are to be tested in the same manner as other subject vehicles.

(1) Vehicles with engines other than the engine originally installed by the manufacturer or an identical replacement of such engine shall be subject to the test procedures and standards for the chassis type and model year including visual equipment inspections for all parts that are part of the original or now-applicable certified configuration and part of the normal inspection. States may choose to require vehicles with such engines to be subject to the test procedures and standards for the engine model year if it is newer than the chassis model year.

(2) Vehicles that have been switched from an engine of one fuel type to another fuel type that is subject to the program (e.g., from a diesel engine to a gasoline engine) shall be subject to the test procedures and standards for the current fuel type, and to the requirements of paragraph (d)(1) of this section.

(3) Vehicles that are switched to a fuel type for which there is no certified configuration shall be tested according to the most stringent emission standards established for that vehicle type and model year. Emission control device requirements may be waived if the program determines that the alternatively fueled vehicle configuration would meet the new vehicle standards for that model year without such devices.

(4) Mixing vehicle classes (e.g., light-duty with heavy-duty) and certification types (e.g., California with Federal) within a single vehicle configuration shall be considered tampering.

(e) *SIP requirements.* The SIP shall include a description of each test procedure used. The SIP shall include the rule, ordinance or law describing and establishing the test procedures.

§ 51.358 Test equipment.

Computerized test systems are required for performing any measurement on subject vehicles.

(a) *Performance features of computerized test systems.* The test equipment shall be certified by the program to meet the requirements contained in appendix D to this subpart, and newly acquired systems shall be subjected to acceptance test procedures to ensure

compliance with program specifications.

(1) Emission test equipment shall be capable of testing all subject vehicles and shall be updated from time to time to accommodate new technology vehicles as well as changes to the program.

(2) At a minimum, emission test equipment:

(i) Shall be automated to the highest degree commercially available to minimize the potential for intentional fraud and/or human error;

(ii) Shall be secure from tampering and/or abuse;

(iii) Shall be based upon written specifications; and

(iv) Shall be capable of simultaneously sampling dual exhaust vehicles.

(3) The vehicle owner or driver shall be provided with a computer-generated record of test results, including all of the items listed in 40 CFR part 85, subpart W as being required on the test record. The test report shall include:

(i) A vehicle description, including license plate number, vehicle identification number, and odometer reading;

(ii) The date and time of test;

(iii) The name or identification number of the individual(s) performing the tests and the location of the test station and lane;

(iv) The type of tests performed, including emission tests, visual checks for the presence of emission control components, and functional, evaporative system checks;

(v) The applicable test standards;

(vi) The test results, including exhaust concentrations and pass/fail results for each mode measured, pass/fail results for evaporative system checks, and which emission control devices inspected were passed, failed, or not applicable;

(vii) A statement indicating the availability of warranty coverage as required in section 207 of the Clean Air Act;

(viii) Certification that tests were performed in accordance with the regulations and, in the case of decentralized programs, the signature of the individual who performed the test; and

(ix) For vehicles that fail the tailpipe emission test, information on the possible causes of the specific pattern of high emission levels found during the test.

(b) *Functional characteristics of computerized test systems.* The test system is composed of emission measurement devices and other motor vehicle test equipment controlled by a computer.

(1) The test system shall automatically:

(i) Make a pass/fail decision for all measurements;

(ii) Record test data to an electronic medium;

(iii) Conduct regular self-testing of recording accuracy;

(iv) Perform electrical calibration and system integrity checks before each test, as applicable; and

(v) Initiate system lockouts for:

(A) Tampering with security aspects of the test system;

(B) Failing to conduct or pass periodic calibration or leak checks;

(C) Failing to conduct or pass the constant volume sampler flow rate check (if applicable);

(D) Failing to conduct or pass any of the dynamometer checks, including coast-down, roll speed and roll distance, power absorption capability, and inertia weight selection checks (if applicable);

(E) Failing to conduct or pass the pressure monitoring device check (if applicable);

(F) Failing to conduct or pass the purge flow metering system check (if applicable); and

(G) A full data recording medium or one that does not pass a cyclical redundancy check.

(2) Test systems in enhanced I/M programs shall include a real-time data link to a host computer that prevents unauthorized multiple initial tests on the same vehicle in a test cycle and to insure test record accuracy.

(3) The test system shall insure accurate data collection by limiting, cross-checking, and/or confirming manual data entry.

(4) *On-board diagnostic test equipment requirements.* [Reserved]

(c) *SIP requirements.* The SIP shall include written technical specifications for all test equipment used in the program and shall address each of the above requirements. The specifications shall describe the emission analysis

process, the necessary test equipment, the required features, and written acceptance testing criteria and procedures.

§ 51.359 Quality control.

Quality control measures shall insure that emission measurement equipment is calibrated and maintained properly, and that inspection, calibration records, and control charts are accurately created, recorded and maintained.

(a) *General requirements.* (1) The practices described in this section and in Appendix A to this subpart shall be followed, at a minimum. Alternatives or exceptions to these procedures or frequencies may be approved by the Administrator based on a demonstration, including control chart analysis, of equivalent performance.

(2) Preventive maintenance on all inspection equipment necessary to insure accurate and repeatable operation shall be performed on a periodic basis.

(3) Computerized analyzers shall automatically record quality control check information, lockouts, attempted tampering, and any other recordable circumstances which should be monitored to insure quality control (e.g., service calls).

(b) *Requirements for steady-state emissions testing equipment.* (1) Equipment shall be maintained according to demonstrated good engineering practices to assure test accuracy. The calibration and adjustment requirements in Appendix A to this subpart shall apply to all steady-state test equipment. States may adjust calibration schedules and other quality control frequencies by using statistical process control to monitor equipment performance on an ongoing basis.

(2) For analyzers that use ambient air as zero air, provision shall be made to draw the air from outside the inspection bay or lane in which the analyzer is situated.

(3) The analyzer housing shall be constructed to protect the analyzer bench and electrical components from ambient temperature and humidity fluctuations that exceed the range of the analyzer's design specifications.

(4) Analyzers shall automatically purge the analytical system after each test.

(c) *Requirements for transient exhaust emission test equipment.* Equipment shall be maintained according to demonstrated good engineering practices to assure test accuracy. Computer control of quality assurance checks and quality control charts shall be used whenever possible. Exceptions to the procedures and the frequency of the checks described in Appendix A of this subpart may be approved by the Administrator based on a demonstration of equivalent performance.

(d) *Requirements for evaporative system functional test equipment.* Equipment shall be maintained according to demonstrated good engineering practices to assure test accuracy. Computer control of quality assurance checks and quality control charts shall be used whenever possible. Exceptions to the procedures and the frequency of the checks described in appendix A of this subpart may be approved by the Administrator based on a demonstration of equivalent performance.

(e) *Document security.* Measures shall be taken to maintain the security of all documents by which compliance with the inspection requirement is established including, but not limited to inspection certificates, waiver certificates, license plates, license tabs, and stickers. This section shall in no way require the use of paper documents but shall apply if they are used by the program for these purposes.

(1) Compliance documents shall be counterfeit resistant. Such measures as the use of special fonts, water marks, ultra-violet inks, encoded magnetic strips, unique bar-coded identifiers, and difficult to acquire materials may be used to accomplish this requirement.

(2) All inspection certificates, waiver certificates, and stickers shall be printed with a unique serial number and an official program seal.

(3) Measures shall be taken to ensure that compliance documents cannot be stolen or removed without being damaged.

(f) *SIP requirements.* The SIP shall include a description of quality control and record keeping procedures. The

SIP shall include the procedure manual, rule, ordinance or law describing and establishing the quality control procedures and requirements.

[57 FR 52987, Nov. 5, 1992, as amended at 58 FR 59367, Nov. 9, 1993]

§ 51.360 Waivers and compliance via diagnostic inspection.

The program may allow the issuance of a waiver, which is a form of compliance with the program requirements that allows a motorist to comply without meeting the applicable test standards, as long as the prescribed criteria described below are met.

(a) *Waiver issuance criteria.* The waiver criteria shall include the following at a minimum.

(1) Waivers shall be issued only after a vehicle has failed a retest performed after all qualifying repairs have been completed. Qualifying repairs include repairs of the emission control components, listed in paragraph (a)(5) of this section, performed within 60 days of the test date.

(2) Any available warranty coverage shall be used to obtain needed repairs before expenditures can be counted towards the cost limits in paragraphs (a)(5) and (a)(6) of this section. The operator of a vehicle within the statutory age and mileage coverage under section 207(b) of the Clean Air Act shall present a written denial of warranty coverage from the manufacturer or authorized dealer for this provision to be waived for approved tests applicable to the vehicle.

(3) Waivers shall not be issued to vehicles for tampering-related repairs. The cost of tampering-related repairs shall not be applicable to the minimum expenditure in paragraphs (a)(5) and (a)(6) of this section. States may issue exemptions for tampering-related repairs if it can be verified that the part in question or one similar to it is no longer available for sale.

(4) Repairs shall be appropriate to the cause of the test failure, and a visual check shall be made to determine if repairs were actually made if, given the nature of the repair, it can be visually confirmed. Receipts shall be submitted for review to further verify that qualifying repairs were performed.

(5) General repairs shall be performed by a recognized repair technician (i.e., one professionally engaged in vehicle repair, employed by a going concern whose purpose is vehicle repair, or possessing nationally recognized certification for emission-related diagnosis and repair) in order to qualify for a waiver. I/M programs may allow the cost of parts (not labor) utilized by non-technicians (e.g., owners) to apply toward the waiver limit. The waiver would apply to the cost of parts for the repair or replacement of the following list of emission control components: oxygen sensor, catalytic converter, thermal reactor, EGR valve, fuel filler cap, evaporative canister, PCV valve, air pump, distributor, ignition wires, coil, and spark plugs. The cost of any hoses, gaskets, belts, clamps, brackets or other accessories directly associated with these components may also be applied to the waiver limit.

(6) In basic programs, a minimum of $75 for pre-81 vehicles and $200 for 1981 and newer vehicles shall be spent in order to qualify for a waiver. These model year cutoffs and the associated dollar limits shall be in full effect no later than January 1, 1998. Prior to January 1, 1998, states may adopt any minimum expenditure commensurate with the waiver rate committed to for the purposes of modeling compliance with the basic I/M performance standard.

(7) Beginning on January 1, 1998, enhanced I/M programs shall require the motorist to make an expenditure of at least $450 in repairs to qualify for a waiver. The I/M program shall provide that the $450 minimum expenditure shall be adjusted in January of each year by the percentage, if any, by which the Consumer Price Index for the preceding calendar year differs from the Consumer Price Index of 1989. Prior to January 1, 1998, states may adopt any minimum expenditure commensurate with the waiver rate committed to for the purposes of modeling compliance with the relevant enhanced I/M performance standard.

(i) The Consumer Price Index for any calendar year is the average of the Consumer Price Index for all-urban consumers published by the Department of Labor, as of the close of the 12-

month period ending on August 31 of each calendar year. A copy of the current Consumer Price Index may be obtained from the Emission Planning and Strategies Division, U.S. Environmental Protection Agency, 2565 Plymouth Road, Ann Arbor, Michigan 48105.

(ii) The revision of the Consumer Price Index which is most consistent with the Consumer Price Index for calendar year 1989 shall be used.

(8) States may establish lower minimum expenditures if a program is established to scrap vehicles that do not meet standards after the lower expenditure is made.

(9) A time extension, not to exceed the period of the inspection frequency, may be granted to obtain needed repairs on a vehicle in the case of economic hardship when waiver requirements have not been met. After having received a time extension, a vehicle must fully pass the applicable test standards before becoming eligible for another time extension. The extension for a vehicle shall be tracked and reported by the program.

(b) *Compliance via diagnostic inspection.* Vehicles subject to a transient IM240 emission test at the cutpoints established in §§ 51.351 (f)(7) and (g)(7) of this subpart may be issued a certificate of compliance without meeting the prescribed emission cutpoints, if, after failing a retest on emissions, a complete, documented physical and functional diagnosis and inspection performed by the I/M agency or a contractor to the I/M agency show that no additional emission-related repairs are needed. Any such exemption policy and procedures shall be subject to approval by the Administrator.

(c) *Quality control of waiver issuance.* (1) Enhanced programs shall control waiver issuance and processing by establishing a system of agency-issued waivers. The state may delegate this authority to a single contractor but inspectors in stations and lanes shall not issue waivers. Basic programs may permit inspector-issued waivers as long as quality assurance efforts include a comprehensive review of waiver issuance.

(2) The program shall include methods of informing vehicle owners or lessors of potential warranty coverage, and ways to obtain warranty repairs.

(3) The program shall insure that repair receipts are authentic and cannot be revised or reused.

(4) The program shall insure that waivers are only valid for one test cycle.

(5) The program shall track, manage, and account for time extensions or exemptions so that owners or lessors cannot receive or retain a waiver improperly.

(d) *SIP requirements.* (1) The SIP shall include a maximum waiver rate expressed as a percentage of initially failed vehicles. This waiver rate shall be used for estimating emission reduction benefits in the modeling analysis.

(2) The state shall take corrective action if the waiver rate exceeds that committed to in the SIP or revise the SIP and the emission reductions claimed.

(3) The SIP shall describe the waiver criteria and procedures, including cost limits, quality assurance methods and measures, and administration.

(4) The SIP shall include the necessary legal authority, ordinance, or rules to issue waivers, set and adjust cost limits as required in paragraph (a)(5) of this section, and carry out any other functions necessary to administer the waiver system, including enforcement of the waiver provisions.

[57 FR 52987, Nov. 5, 1992, as amended at 58 FR 59367, Nov. 9, 1993; 60 FR 48036, Sept. 18, 1995]

§ 51.361 Motorist compliance enforcement.

Compliance shall be ensured through the denial of motor vehicle registration in enhanced I/M programs unless an exception for use of an existing alternative is approved. An enhanced I/M area may use an existing alternative if it demonstrates that the alternative has been more effective than registration denial. An enforcement mechanism may be considered an ''existing alternative'' only in areas that had approved I/M programs with that mechanism in the State Implementation Plan prior to passage of the 1990 Amendments to the Act. A basic I/M area may

use an alternative enforcement mechanism if it demonstrates that the alternative will be as effective as registration denial. Two other types of enforcement programs may qualify for enhanced I/M programs if demonstrated to have been more effective than enforcement of the registration requirement in the past: Sticker-based enforcement programs and computer-matching programs. For newly implementing enhanced areas, including newly subject areas in a state with an I/M program in another part of the state, there is no provision for enforcement alternatives in the Act.

(a) *Registration denial.* Registration denial enforcement is defined as rejecting an application for initial registration or reregistration of a used vehicle (i.e., a vehicle being registered after the initial retail sale and associated registration) unless the vehicle has complied with the I/M requirement prior to granting the application. Pursuant to section 207(g)(3) of the Act, nothing in this subpart shall be construed to require that new vehicles shall receive emission testing prior to initial retail sale. In designing its enforcement program, the state shall:

(1) Provide an external, readily visible means of determining vehicle compliance with the registration requirement to facilitate enforcement of the program;

(2) Adopt a schedule of testing (either annual or biennial) that clearly determines when a vehicle shall comply prior to registration;

(3) Design a testing certification mechanism (either paper-based or electronic) that shall be used for registration purposes and clearly indicates whether the certification is valid for purposes of registration, including:

(i) Expiration date of the certificate;

(ii) Unambiguous vehicle identification information; and

(iii) Whether the vehicle passed or received a waiver;

(4) Routinely issue citations to motorists with expired or missing license plates, with either no registration or an expired registration, and with no license plate decals or expired decals, and provide for enforcement officials other than police to issue citations (e.g., parking meter attendants) to parked vehicles in noncompliance;

(5) Structure the penalty system to deter non-compliance with the registration requirement through the use of mandatory minimum fines (meaning civil, monetary penalties, in this subpart) constituting a meaningful deterrent and through a requirement that compliance be demonstrated before a case can be closed;

(6) Ensure that evidence of testing is available and checked for validity at the time of a new registration of a used vehicle or registration renewal;

(7) Prevent owners or lessors from avoiding testing through manipulation of the title or registration system; title transfers may re-start the clock on the inspection cycle only if proof of current compliance is required at title transfer;

(8) Prevent the fraudulent initial classification or reclassification of a vehicle from subject to non-subject or exempt by requiring proof of address changes prior to registration record modification, and documentation from the testing program (or delegate) certifying based on a physical inspection that the vehicle is exempt;

(9) Limit and track the use of time extensions of the registration requirement to prevent repeated extensions;

(10) Provide for meaningful penalties for cases of registration fraud;

(11) Limit and track exemptions to prevent abuse of the exemption policy for vehicles claimed to be out-of-state; and

(12) Encourage enforcement of vehicle registration transfer requirements when vehicle owners move into the I/M area by coordinating with local and state enforcement agencies and structuring other activities (e.g., drivers license issuance) to effect registration transfers.

(b) *Alternative enforcement mechanisms*—(1) *General requirements.* The program shall demonstrate that a non-registration-based enforcement program is currently more effective than registration-denial enforcement in enhanced I/M programs or, prospectively, as effective as registration denial in basic programs. The following general requirements shall apply:

(i) For enhanced I/M programs, the area in question shall have had an approved SIP with an operating I/M program using the alternative mechanism prior to enactment of the Clean Air Act Amendments of 1990. While modifications to improve compliance may be made to the program that was in effect at the time of enactment, the expected change in effectiveness cannot be considered in determining acceptability;

(ii) The state shall assess the alternative program's effectiveness, as well as the current effectiveness of the registration system, including the following:

(A) Determine the number and percentage of vehicles subject to the I/M program that were in compliance with the program over the course of at least one test cycle; and

(B) Determine the number and fraction of the same group of vehicles as in paragraph (b)(1)(ii)(A) of this section that were in compliance with the registration requirement over the same period. Late registration shall not be considered non-compliance for the purposes of this determination. The precise definition of late registration versus a non-complying vehicle shall be explained and justified in the SIP;

(iii) An alternative mechanism shall be considered more effective if the fraction of vehicles complying with the existing program, as determined according to the requirements of this section, is greater than the fraction of vehicles complying with the registration requirement. An alternative mechanism is as effective if the fraction complying with the program is at least equal to the fraction complying with the registration requirement.

(2) *Sticker-based enforcement.* In addition to the general requirements, a sticker-based enforcement program shall demonstrate that the enforcement mechanism will swiftly and effectively prevent operation of subject vehicles that fail to comply. Such demonstration shall include the following:

(i) An assessment of the current extent of the following forms of non-compliance and demonstration that mechanisms exist to keep such non-compliance within acceptable limits:

(A) Use of stolen, counterfeit, or fraudulently obtained stickers;

(B) In states with safety inspections, the use of ''Safety Inspection Only'' stickers on vehicles that should be subject to the I/M requirement as well; and

(C) Operation of vehicles with expired stickers, including a stratification of non-compliance by length of non-compliance and model year.

(ii) The program as currently implemented or as proposed to be improved shall also:

(A) Require an easily observed external identifier such as the county name on the license plate, an obviously unique license plate tab, or other means that shows whether or not a vehicle is subject to the I/M requirement;

(B) Require an easily observed external identifier, such as a windshield sticker or license plate tab that shows whether a subject vehicle is in compliance with the inspection requirement;

(C) Impose monetary fines at least as great as the estimated cost of compliance with I/M requirements (e.g., test fee plus minimum waiver expenditure) for the absence of such identifiers;

(D) Require that such identifiers be of a quality that makes them difficult to counterfeit, difficult to remove without destroying once installed, and durable enough to last until the next inspection without fading, peeling, or other deterioration;

(E) Perform surveys in a variety of locations and at different times for the presence of the required identifiers such that at least 10% of the vehicles or 10,000 vehicles (whichever is less) in the subject vehicle population are sampled each year;

(F) Track missing identifiers for all inspections performed at each station, with stations being held accountable for all such identifiers they are issued; and

(G) Assess and collect significant fines for each identifier that is unaccounted for by a station.

(3) *Computer matching.* In addition to the general requirements, computer-matching programs shall demonstrate that the enforcement mechanism will swiftly and effectively prevent operation of subject vehicles that fail to comply. Such demonstration shall:

(i) Require an expeditious system that results in at least 90% of the subject vehicles in compliance within 4 months of the compliance deadline;

(ii) Require that subject vehicles be given compliance deadlines based on the regularly scheduled test date, not the date of previous compliance;

(iii) Require that motorists pay monetary fines at least as great as the estimated cost of compliance with I/M requirements (e.g., test fee plus minimum waiver expenditure) for the continued operation of a noncomplying vehicle beyond 4 months of the deadline;

(iv) Require that continued non-compliance will eventually result in preventing operation of the non-complying vehicle (no later than the date of the next test cycle) through, at a minimum, suspension of vehicle registration and subsequent denial of reregistration;

(v) Demonstrate that the computer system currently in use is adequate to store and manipulate the I/M vehicle database, generate computerized notices, and provide regular backup to said system while maintaining auxiliary storage devices to insure ongoing operation of the system and prevent data losses;

(vi) Track each vehicle through the steps taken to ensure compliance, including:

(A) The compliance deadline;

(B) The date of initial notification;

(C) The dates warning letters are sent to non-complying vehicle owners;

(D) The dates notices of violation or other penalty notices are sent; and

(E) The dates and outcomes of other steps in the process, including the final compliance date;

(vii) Compile and report monthly summaries including statistics on the percentage of vehicles at each stage in the enforcement process; and

(viii) Track the number and percentage of vehicles initially identified as requiring testing but which are never tested as a result of being junked, sold to a motorist in a non-I/M program area, or for some other reason.

(c) *SIP requirements.* (1) The SIP shall provide information concerning the enforcement process, including:

(i) A description of the existing compliance mechanism if it is to be used in the future and the demonstration that it is as effective or more effective than registration-denial enforcement;

(ii) An identification of the agencies responsible for performing each of the applicable activities in this section;

(iii) A description of and accounting for all classes of exempt vehicles; and

(iv) A description of the plan for testing fleet vehicles, rental car fleets, leased vehicles, and any other subject vehicles, e.g., those operated in (but not necessarily registered in) the program area.

(2) The SIP shall include a determination of the current compliance rate based on a study of the system that includes an estimate of compliance losses due to loopholes, counterfeiting, and unregistered vehicles. Estimates of the effect of closing such loopholes and otherwise improving the enforcement mechanism shall be supported with detailed analyses.

(3) The SIP shall include the legal authority to implement and enforce the program.

(4) The SIP shall include a commitment to an enforcement level to be used for modeling purposes and to be maintained, at a minimum, in practice.

§51.362 Motorist compliance enforcement program oversight.

The enforcement program shall be audited regularly and shall follow effective program management practices, including adjustments to improve operation when necessary.

(a) *Quality assurance and quality control.* A quality assurance program shall be implemented to insure effective overall performance of the enforcement system. Quality control procedures are required to instruct individuals in the enforcement process regarding how to properly conduct their activities. At a minimum, the quality control and quality assurance program shall include:

(1) Verification of exempt vehicle status by inspecting and confirming such vehicles by the program or its delegate;

(2) Facilitation of accurate critical test data and vehicle identifier collection through the use of automatic data

capture systems such as bar-code scanners or optical character readers, or through redundant data entry;

(3) Maintenance of an audit trail to allow for the assessment of enforcement effectiveness;

(4) Establishment of written procedures for personnel directly engaged in I/M enforcement activities;

(5) Establishment of written procedures for personnel engaged in I/M document handling and processing, such as registration clerks or personnel involved in sticker dispensing and waiver processing, as well as written procedures for the auditing of their performance;

(6) Follow-up validity checks on out-of-area or exemption-triggering registration changes;

(7) Analysis of registration-change applications to target potential violators;

(8) A determination of enforcement program effectiveness through periodic audits of test records and program compliance documentation;

(9) Enforcement procedures for disciplining, retraining, or removing enforcement personnel who deviate from established requirements, or in the case of non-government entities that process registrations, for defranchising, revoking or otherwise discontinuing the activity of the entity issuing registrations; and

(10) The prevention of fraudulent procurement or use of inspection documents by controlling and tracking document distribution and handling, and making stations financially liable for missing or unaccounted for documents by assessing monetary fines reflecting the ''street value'' of these documents (i.e., the test fee plus the minimum waiver expenditure).

(b) *Information management.* In establishing an information base to be used in characterizing, evaluating, and enforcing the program, the state shall:

(1) Determine the subject vehicle population;

(2) Permit EPA audits of the enforcement process;

(3) Assure the accuracy of registration and other program document files;

(4) Maintain and ensure the accuracy of the testing database through periodic internal and/or third-party review; through automated or redundant data entry; and, through automated analysis for valid alpha-numeric sequences of the vehicle identification number (VIN), certificate number, or license plate number;

(5) Compare the testing database to the registration database to determine program effectiveness, establish compliance rates, and to trigger potential enforcement action against non-complying motorists; and

(6) Sample the fleet as a determination of compliance through parking lot surveys, road-side pull-overs, or other in-use vehicle measurements.

(c) *SIP requirements.* The SIP shall include a description of enforcement program oversight and information management activities.

§ 51.363 Quality assurance.

An ongoing quality assurance program shall be implemented to discover, correct and prevent fraud, waste, and abuse and to determine whether procedures are being followed, are adequate, whether equipment is measuring accurately, and whether other problems might exist which would impede program performance. The quality assurance and quality control procedures shall be periodically evaluated to assess their effectiveness and relevance in achieving program goals.

(a) *Performance audits.* Performance audits shall be conducted on a regular basis to determine whether inspectors are correctly performing all tests and other required functions. Performance audits shall be of two types: overt and covert, and shall include:

(1) Performance audits based upon written procedures and results shall be reported using either electronic or written forms to be retained in the inspector and station history files, with sufficient detail to support either an administrative or civil hearing;

(2) Performance audits in addition to regularly programmed audits for stations employing inspectors suspected of violating regulations as a result of audits, data analysis, or consumer complaints;

(3) Overt performance audits shall be performed at least twice per year for each lane or test bay and shall include:

(i) A check for the observance of appropriate document security;

(ii) A check to see that required record keeping practices are being followed;

(iii) A check for licenses or certificates and other required display information; and

(iv) Observation and written evaluation of each inspector's ability to properly perform an inspection;

(4) Covert performance audits shall include:

(i) Remote visual observation of inspector performance, which may include the use of aids such as binoculars or video cameras, at least once per year per inspector in high-volume stations (i.e., those performing more than 4000 tests per year);

(ii) Site visits at least once per year per number of inspectors using covert vehicles set to fail (this requirement sets a minimum level of activity, not a requirement that each inspector be involved in a covert audit);

(iii) For stations that conduct both testing and repairs, at least one covert vehicle visit per station per year including the purchase of repairs and subsequent retesting if the vehicle is initially failed for tailpipe emissions (this activity may be accomplished in conjunction with paragraph (a)(4)(ii) of this section but must involve each station at least once per year);

(iv) Documentation of the audit, including vehicle condition and preparation, sufficient for building a legal case and establishing a performance record;

(v) Covert vehicles covering the range of vehicle technology groups (e.g., carbureted and fuel-injected vehicles) included in the program, including a full range of introduced malfunctions covering the emission test, the evaporative system tests, and emission control component checks (as applicable);

(vi) Sufficient numbers of covert vehicles and auditors to allow for frequent rotation of both to prevent detection by station personnel; and

(vii) Access to on-line inspection databases by state personnel to permit the creation and maintenance of covert vehicle records.

(b) *Record audits.* Station and inspector records shall be reviewed or screened at least monthly to assess station performance and identify problems that may indicate potential fraud or incompetence. Such review shall include:

(1) Software-based, computerized analysis to identify statistical inconsistencies, unusual patterns, and other discrepancies;

(2) Visits to inspection stations to review records not already covered in the electronic analysis (if any); and

(3) Comprehensive accounting for all official forms that can be used to demonstrate compliance with the program.

(c) *Equipment audits.* During overt site visits, auditors shall conduct quality control evaluations of the required test equipment, including (where applicable):

(1) A gas audit using gases of known concentrations at least as accurate as those required for regular equipment quality control and comparing these concentrations to actual readings;

(2) A check for tampering, worn instrumentation, blocked filters, and other conditions that would impede accurate sampling;

(3) A check for critical flow in critical flow CVS units;

(4) A check of the Constant Volume Sampler flow calibration;

(5) A check for the optimization of the Flame Ionization Detection fuel-air ratio using methane;

(6) A leak check;

(7) A check to determine that station gas bottles used for calibration purposes are properly labelled and within the relevant tolerances;

(8) Functional dynamometer checks addressing coast-down, roll speed and roll distance, inertia weight selection, and power absorption;

(9) A check of the system's ability to accurately detect background pollutant concentrations;

(10) A check of the pressure monitoring devices used to perform the evaporative canister pressure test; and

(11) A check of the purge flow metering system.

(d) *Auditor training and proficiency*. (1) Auditors shall be formally trained and knowledgeable in:

(i) The use of analyzers;

(ii) Program rules and regulations;

(iii) The basics of air pollution control;

(iv) Basic principles of motor vehicle engine repair, related to emission performance;

(v) Emission control systems;

(vi) Evidence gathering;

(vii) State administrative procedures laws;

(viii) Quality assurance practices; and

(ix) Covert audit procedures.

(2) Auditors shall themselves be audited at least once annually.

(3) The training and knowledge requirements in paragraph (d)(1) of this section may be waived for temporary auditors engaged solely for the purpose of conducting covert vehicle runs.

(e) *SIP requirements.* The SIP shall include a description of the quality assurance program, and written procedures manuals covering both overt and covert performance audits, record audits, and equipment audits. This requirement does not include materials or discussion of details of enforcement strategies that would ultimately hamper the enforcement process.

§ 51.364 Enforcement against contractors, stations and inspectors.

Enforcement against licensed stations or contractors, and inspectors shall include swift, sure, effective, and consistent penalties for violation of program requirements.

(a) *Imposition of penalties.* A penalty schedule shall be developed that establishes minimum penalties for violations of program rules and procedures.

(1) The schedule shall categorize and list violations and the minimum penalties to be imposed for first, second, and subsequent violations and for multiple violation of different requirements. In the case of contracted systems, the state may use compensation retainage in lieu of penalties.

(2) Substantial penalties or retainage shall be imposed on the first offense for violations that directly affect emission reduction benefits. At a minimum, in test-and-repair programs inspector and station license suspension shall be imposed for at least 6 months whenever a vehicle is intentionally improperly passed for any required portion of the test. In test-only programs, inspectors shall be removed from inspector duty for at least 6 months (or a retainage penalty equivalent to the inspector's salary for that period shall be imposed).

(3) All findings of serious violations of rules or procedural requirements shall result in mandatory fines or retainage. In the case of gross neglect, a first offense shall result in a fine or retainage of no less than $100 or 5 times the inspection fee, whichever is greater, for the contractor or the licensed station, and the inspector if involved.

(4) Any finding of inspector incompetence shall result in mandatory training before inspection privileges are restored.

(5) License or certificate suspension or revocation shall mean the individual is barred from direct or indirect involvement in any inspection operation during the term of the suspension or revocation.

(b) *Legal authority.* (1) The quality assurance officer shall have the authority to temporarily suspend station and inspector licenses or certificates (after approval of a superior) immediately upon finding a violation or equipment failure that directly affects emission reduction benefits, pending a hearing when requested. In the case of immediate suspension, a hearing shall be held within fourteen calendar days of a written request by the station licensee or the inspector. Failure to hold a hearing within 14 days when requested shall cause the suspension to lapse. In the event that a state's constitution precludes such a temporary license suspension, the enforcement system shall be designed with adequate resources and mechanisms to hold a hearing to suspend or revoke the station or inspector license within three station business days of the finding.

(2) The oversight agency shall have the authority to impose penalties against the licensed station or contractor, as well as the inspector, even if the licensee or contractor had no direct knowledge of the violation but was found to be careless in oversight of inspectors or has a history of violations. Contractors and licensees shall be held fully responsible for inspector performance in the course of duty.

(c) *Recordkeeping.* The oversight agency shall maintain records of all warnings, civil fines, suspensions, revocations, and violations and shall compile statistics on violations and penalties on an annual basis.

(d) *SIP requirements.* (1) The SIP shall include the penalty schedule and the legal authority for establishing and imposing penalties, civil fines, license suspension, and revocations.

(2) In the case of state constitutional impediments to immediate suspension authority, the state Attorney General shall furnish an official opinion for the SIP explaining the constitutional impediment as well as relevant case law.

(3) The SIP shall describe the administrative and judicial procedures and responsibilities relevant to the enforcement process, including which agencies, courts, and jurisdictions are involved; who will prosecute and adjudicate cases; and other aspects of the enforcement of the program requirements, the resources to be allocated to this function, and the source of those funds. In states without immediate suspension authority, the SIP shall demonstrate that sufficient resources, personnel, and systems are in place to meet the three day case management requirement for violations that directly affect emission reductions.

§ 51.365 Data collection.

Accurate data collection is essential to the management, evaluation, and enforcement of an I/M program. The program shall gather test data on individual vehicles, as well as quality control data on test equipment.

(a) *Test data.* The goal of gathering test data is to unambiguously link specific test results to a specific vehicle, I/M program registrant, test site, and inspector, and to determine whether or not the correct testing parameters were observed for the specific vehicle in question. In turn, these data can be used to distinguish complying and noncomplying vehicles as a result of analyzing the data collected and comparing it to the registration database, to screen inspection stations and inspectors for investigation as to possible irregularities, and to help establish the overall effectiveness of the program. At a minimum, the program shall collect the following with respect to each test conducted:

(1) Test record number;

(2) Inspection station and inspector numbers;

(3) Test system number;

(4) Date of the test;

(5) Emission test start time and the time final emission scores are determined;

(6) Vehicle Identification Number;

(7) License plate number;

(8) Test certificate number;

(9) Gross Vehicle Weight Rating (GVWR);

(10) Vehicle model year, make, and type;

(11) Number of cylinders or engine displacement;

(12) Transmission type;

(13) Odometer reading;

(14) Category of test performed (i.e., initial test, first retest, or subsequent retest);

(15) Fuel type of the vehicle (i.e., gas, diesel, or other fuel);

(16) Type of vehicle preconditioning performed (if any);

(17) Emission test sequence(s) used;

(18) Hydrocarbon emission scores and standards for each applicable test mode;

(19) Carbon monoxide emission scores and standards for each applicable test mode;

(20) Carbon dioxide emission scores ($CO+CO_2$) and standards for each applicable test mode;

(21) Nitrogen oxides emission scores and standards for each applicable test mode;

(22) Results (Pass/Fail/Not Applicable) of the applicable visual inspections for the catalytic converter, air system, gas cap, evaporative system, positive crankcase ventilation (PCV) valve, fuel inlet restrictor, and any other visual inspection for which emission reduction credit is claimed;

(23) Results of the evaporative system pressure test expressed as a pass or fail; and

(24) Results of the evaporative system purge test expressed as a pass or fail along with the total purge flow in liters achieved during the test.

(b) *Quality control data.* At a minimum, the program shall gather and report the results of the quality control

checks required under § 51.359 of this subpart, identifying each check by station number, system number, date, and start time. The data report shall also contain the concentration values of the calibration gases used to perform the gas characterization portion of the quality control checks.

§ 51.366 Data analysis and reporting.

Data analysis and reporting are required to allow for monitoring and evaluation of the program by program management and EPA, and shall provide information regarding the types of program activities performed and their final outcomes, including summary statistics and effectiveness evaluations of the enforcement mechanism, the quality assurance system, the quality control program, and the testing element. Initial submission of the following annual reports shall commence within 18 months of initial implementation of the program as required by § 51.373 of this subpart. The biennial report shall commence within 30 months of initial implementation of the program as required by § 51.373 of this subpart.

(a) *Test data report.* The program shall submit to EPA by July of each year a report providing basic statistics on the testing program for January through December of the previous year, including:

(1) The number of vehicles tested by model year and vehicle type;

(2) By model year and vehicle type, the number and percentage of vehicles:

(i) Failing the emissions test initially;

(ii) Failing each emission control component check initially;

(iii) Failing the evaporative system functional and integrity checks initially;

(iv) Failing the first retest for tailpipe emissions;

(v) Passing the first retest for tailpipe emissions;

(vi) Initially failed vehicles passing the second or subsequent retest for tailpipe emissions;

(vii) Initially failed vehicles passing each emission control component check on the first or subsequent retest by component;

(viii) Initially failed vehicles passing the evaporative system functional and integrity checks on the first or subsequent retest by component;

(ix) Initially failed vehicles receiving a waiver; and

(x) Vehicles with no known final outcome (regardless of reason);

(3) The initial test volume by model year and test station;

(4) The initial test failure rate by model year and test station; and

(5) The average increase or decrease in tailpipe emission levels for HC, CO, and NO_x (if applicable) after repairs by model year and vehicle type for vehicles receiving a mass emissions test.

(b) *Quality assurance report.* The program shall submit to EPA by July of each year a report providing basic statistics on the quality assurance program for January through December of the previous year, including:

(1) The number of inspection stations and lanes:

(i) Operating throughout the year; and

(ii) Operating for only part of the year;

(2) The number of inspection stations and lanes operating throughout the year:

(i) Receiving overt performance audits in the year;

(ii) Not receiving overt performance audits in the year;

(iii) Receiving covert performance audits in the year;

(iv) Not receiving covert performance audits in the year; and

(v) That have been shut down as a result of overt performance audits;

(3) The number of covert audits:

(i) Conducted with the vehicle set to fail the emission test;

(ii) Conducted with the vehicle set to fail the component check;

(iii) Conducted with the vehicle set to fail the evaporative system checks;

(iv) Conducted with the vehicle set to fail any combination of two or more of the above checks;

(v) Resulting in a false pass for emissions;

(vi) Resulting in a false pass for component checks;

(vii) Resulting in a false pass for the evaporative system check; and

(viii) Resulting in a false pass for any combination of two or more of the above checks;

(4) The number of inspectors and stations:

(i) That were suspended, fired, or otherwise prohibited from testing as a result of covert audits;

(ii) That were suspended, fired, or otherwise prohibited from testing for other causes; and

(iii) That received fines;

(5) The number of inspectors licensed or certified to conduct testing;

(6) The number of hearings:

(i) Held to consider adverse actions against inspectors and stations; and

(ii) Resulting in adverse actions against inspectors and stations;

(7) The total amount collected in fines from inspectors and stations by type of violation;

(8) The total number of covert vehicles available for undercover audits over the year; and

(9) The number of covert auditors available for undercover audits.

(c) *Quality control report.* The program shall submit to EPA by July of each year a report providing basic statistics on the quality control program for January through December of the previous year, including:

(1) The number of emission testing sites and lanes in use in the program;

(2) The number of equipment audits by station and lane;

(3) The number and percentage of stations that have failed equipment audits; and

(4) Number and percentage of stations and lanes shut down as a result of equipment audits.

(d) *Enforcement report.* (1) All varieties of enforcement programs shall, at a minimum, submit to EPA by July of each year a report providing basic statistics on the enforcement program for January through December of the previous year, including:

(i) An estimate of the number of vehicles subject to the inspection program, including the results of an analysis of the registration data base;

(ii) The percentage of motorist compliance based upon a comparison of the number of valid final tests with the number of subject vehicles;

(iii) The total number of compliance documents issued to inspection stations;

(iv) The number of missing compliance documents;

(v) The number of time extensions and other exemptions granted to motorists; and

(vi) The number of compliance surveys conducted, number of vehicles surveyed in each, and the compliance rates found.

(2) Registration denial based enforcement programs shall provide the following additional information:

(i) A report of the program's efforts and actions to prevent motorists from falsely registering vehicles out of the program area or falsely changing fuel type or weight class on the vehicle registration, and the results of special studies to investigate the frequency of such activity; and

(ii) The number of registration file audits, number of registrations reviewed, and compliance rates found in such audits.

(3) Computer-matching based enforcement programs shall provide the following additional information:

(i) The number and percentage of subject vehicles that were tested by the initial deadline, and by other milestones in the cycle;

(ii) A report on the program's efforts to detect and enforce against motorists falsely changing vehicle classifications to circumvent program requirements, and the frequency of this type of activity; and

(iii) The number of enforcement system audits, and the error rate found during those audits.

(4) Sticker-based enforcement systems shall provide the following additional information:

(i) A report on the program's efforts to prevent, detect, and enforce against sticker theft and counterfeiting, and the frequency of this type of activity;

(ii) A report on the program's efforts to detect and enforce against motorists falsely changing vehicle classifications to circumvent program requirements, and the frequency of this type of activity; and

(iii) The number of parking lot sticker audits conducted, the number of vehicles surveyed in each, and the noncompliance rate found during those audits.

(e) *Additional reporting requirements.* In addition to the annual reports in paragraphs (a) through (d) of this section, programs shall submit to EPA by July of every other year, biennial reports addressing:

(1) Any changes made in program design, funding, personnel levels, procedures, regulations, and legal authority, with detailed discussion and evaluation of the impact on the program of all such changes; and

(2) Any weaknesses or problems identified in the program within the two-year reporting period, what steps have already been taken to correct those problems, the results of those steps, and any future efforts planned.

(f) *SIP requirements.* The SIP shall describe the types of data to be collected.

§ 51.367 Inspector training and licensing or certification.

All inspectors shall receive formal training and be licensed or certified to perform inspections.

(a) *Training.* (1) Inspector training shall impart knowledge of the following:

(i) The air pollution problem, its causes and effects;

(ii) The purpose, function, and goal of the inspection program;

(iii) Inspection regulations and procedures;

(iv) Technical details of the test procedures and the rationale for their design;

(v) Emission control device function, configuration, and inspection;

(vi) Test equipment operation, calibration, and maintenance;

(vii) Quality control procedures and their purpose;

(viii) Public relations; and

(ix) Safety and health issues related to the inspection process.

(2) If inspector training is not administered by the program, the responsible state agency shall monitor and evaluate the training program delivery.

(3) In order to complete the training requirement, a trainee shall pass (i.e., a minimum of 80% of correct responses or lower if an occupational analysis justifies it) a written test covering all aspects of the training. In addition, a hands-on test shall be administered in which the trainee demonstrates without assistance the ability to conduct a proper inspection, to properly utilize equipment and to follow other procedures. Inability to properly conduct all test procedures shall constitute failure of the test. The program shall take appropriate steps to insure the security and integrity of the testing process.

(b) *Licensing and certification.* (1) All inspectors shall be either licensed by the program (in the case of test-and-repair systems that do not use contracts with stations) or certified by an organization other than the employer (in test-only programs and test-and-repair programs that require station owners to enter into contracts with the state) in order to perform official inspections.

(2) Completion of inspector training and passing required tests shall be a condition of licensing or certification.

(3) Inspector licenses and certificates shall be valid for no more than 2 years, at which point refresher training and testing shall be required prior to renewal. Alternative approaches based on more comprehensive skill examination and determination of inspector competency may be used.

(4) Licenses or certificates shall not be considered a legal right but rather a privilege bestowed by the program conditional upon adherence to program requirements.

(c) *SIP requirements.* The SIP shall include a description of the training program, the written and hands-on tests, and the licensing or certification process.

§ 51.368 Public information and consumer protection.

(a) *Public awareness.* The SIP shall include a plan for informing the public on an ongoing basis throughout the life of the I/M program of the air quality problem, the requirements of federal and state law, the role of motor vehicles in the air quality problem, the need for and benefits of an inspection program, how to maintain a vehicle in a low-emission condition, how to find a

qualified repair technician, and the requirements of the I/M program. Motorists that fail the I/M test in enhanced I/M areas shall be offered a list of repair facilities in the area and information on the results of repairs performed by repair facilities in the area, as described in §51.369(b)(1) of this subpart. Motorists that fail the I/M test shall also be provided with software-generated, interpretive diagnostic information based on the particular portions of the test that were failed.

(b) *Consumer protection.* The oversight agency shall institute procedures and mechanisms to protect the public from fraud and abuse by inspectors, mechanics, and others involved in the I/M program. This shall include a challenge mechanism by which a vehicle owner can contest the results of an inspection. It shall include mechanisms for protecting whistle blowers and following up on complaints by the public or others involved in the process. It shall include a program to assist owners in obtaining warranty covered repairs for eligible vehicles that fail a test. The SIP shall include a detailed consumer protection plan.

§51.369 Improving repair effectiveness.

Effective repairs are the key to achieving program goals and the state shall take steps to ensure the capability exists in the repair industry to repair vehicles that fail I/M tests.

(a) *Technical assistance.* The oversight agency shall provide the repair industry with information and assistance related to vehicle inspection diagnosis and repair.

(1) The agency shall regularly inform repair facilities of changes in the inspection program, training course schedules, common problems being found with particular engine families, diagnostic tips and the like.

(2) The agency shall provide a hot line service to assist repair technicians with specific repair problems, answer technical questions that arise in the repair process, and answer questions related to the legal requirements of state and federal law with regard to emission control device tampering, engine switching, or similar issues.

(b) *Performance monitoring.* (1) In enhanced I/M program areas, the oversight agency shall monitor the performance of individual motor vehicle repair facilities, and provide to the public at the time of initial failure, a summary of the performance of local repair facilities that have repaired vehicles for retest. Performance monitoring shall include statistics on the number of vehicles submitted for a retest after repair by the repair facility, the percentage passing on first retest, the percentage requiring more than one repair/retest trip before passing, and the percentage receiving a waiver. Programs may provide motorists with alternative statistics that convey similar information on the relative ability of repair facilities in providing effective and convenient repair, in light of the age and other characteristics of vehicles presented for repair at each facility.

(2) Programs shall provide feedback, including statistical and qualitative information to individual repair facilities on a regular basis (at least annually) regarding their success in repairing failed vehicles.

(3) A prerequisite for a retest shall be a completed repair form that indicates which repairs were performed, as well as any technician recommended repairs that were not performed, and identification of the facility that performed the repairs.

(c) *Repair technician training.* The state shall assess the availability of adequate repair technician training in the I/M area and, if the types of training described in paragraphs (c)(1) through (4) of this section are not currently available, shall insure that training is made available to all interested individuals in the community either through private or public facilities. This may involve working with local community colleges or vocational schools to add curricula to existing programs or start new programs or it might involve attracting private training providers to offer classes in the area. The training available shall include:

(1) Diagnosis and repair of malfunctions in computer controlled, close-loop vehicles;

(2) The application of emission control theory and diagnostic data to the diagnosis and repair of failures on the transient emission test and the evaporative system functional checks;

(3) Utilization of diagnostic information on systematic or repeated failures observed in the transient emission test and the evaporative system functional checks; and

(4) General training on the various subsystems related to engine emission control.

(d) *SIP requirements.* The SIP shall include a description of the technical assistance program to be implemented, a description of the procedures and criteria to be used in meeting the performance monitoring requirements of this section, and a description of the repair technician training resources available in the community.

§ 51.370 Compliance with recall notices.

States shall establish methods to ensure that vehicles subject to enhanced I/M and that are included in either a ''Voluntary Emissions Recall'' as defined at 40 CFR 85.1902(d), or in a remedial plan determination made pursuant to section 207(c) of the Act, receive the required repairs. States shall require that owners of recalled vehicles have the necessary recall repairs completed, either in order to complete an annual or biennial inspection process or to obtain vehicle registration renewal. All recalls for which owner notification occurs after January 1, 1995 shall be included in the enhanced I/M recall requirement.

(a) *General requirements.* (1) The state shall have an electronic means to identify recalled vehicles based on lists of VINs with unresolved recalls made available by EPA, the vehicle manufacturers, or a third party supplier approved by the Administrator. The state shall update its list of unresolved recalls on a quarterly basis at a minimum.

(2) The state shall require owners or lessees of vehicles with unresolved recalls to show proof of compliance with recall notices in order to complete either the inspection or registration cycle.

(3) Compliance shall be required on the next registration or inspection date, allowing a reasonable period to comply, after notification of recall was received by the state.

(b) *Enforcement.* (1) A vehicle shall either fail inspection or be denied vehicle registration if the required recall repairs have not been completed.

(2) In the case of vehicles obtaining recall repairs but remaining on the updated list provided in paragraph (a)(1) of this section, the state shall have a means of verifying completion of the required repairs; electronic records or paper receipts provided by the authorized repair facility shall be required. The vehicle inspection or registration record shall be modified to include (or be supplemented with other VIN-linked records which include) the recall campaign number(s) and the date(s) repairs were performed. Documentation verifying required repairs shall include the following:

(i) The VIN, make, and model year of the vehicle; and

(ii) The recall campaign number and the date repairs were completed.

(c) *Reporting requirements.* The state shall submit to EPA, by July of each year for the previous calendar year, an annual report providing the following information:

(1) The number of vehicles in the I/M area initially listed as having unresolved recalls, segregated by recall campaign number;

(2) The number of recalled vehicles brought into compliance by owners;

(3) The number of listed vehicles with unresolved recalls that, as of the end of the calendar year, were not yet due for inspection or registration;

(4) The number of recalled vehicles still in non-compliance that have either failed inspection or been denied registration on the basis of non-compliance with recall; and

(5) The number of recalled vehicles that are otherwise not in compliance.

(d) *SIP submittals.* The SIP shall describe the procedures used to incorporate the vehicle lists provided in paragraph (a)(1) of this section into the inspection or registration database, the quality control methods used to insure that recall repairs are properly documented and tracked, and the method

(inspection failure or registration denial) used to enforce the recall requirements.

§51.371 On-road testing.

On-road testing is defined as the measurement of HC, CO, NO_x, and/or CO_2 emissions on any road or roadside in the nonattainment area or the I/M program area. On-road testing is required in enhanced I/M areas and is an option for basic I/M areas.

(a) *General requirements.* (1) On-road testing is to be part of the emission testing system, but is to be a complement to testing otherwise required.

(2) On-road testing is not required in every season or on every vehicle but shall evaluate the emission performance of 0.5% of the subject fleet statewide or 20,000 vehicles, whichever is less, including any vehicles that may be subject to the follow-up inspection provisions of paragraph (a)(4) of this section, each inspection cycle.

(3) The on-road testing program shall provide information about the emission performance of in-use vehicles, by measuring on-road emissions through the use of remote sensing devices or roadside pullovers including tailpipe emission testing. The program shall collect, analyze and report on-road testing data.

(4) Owners of vehicles that have previously been through the normal periodic inspection and passed the final retest and found to be high emitters shall be notified that the vehicles are required to pass an out-of-cycle follow-up inspection; notification may be by mailing in the case of remote sensing on-road testing or through immediate notification if roadside pullovers are used.

(b) *SIP requirements.* (1) The SIP shall include a detailed description of the on-road testing program, including the types of testing, test limits and criteria, the number of vehicles (the percentage of the fleet) to be tested, the number of employees to be dedicated to the on-road testing effort, the methods for collecting, analyzing, utilizing, and reporting the results of on-road testing and, the portion of the program budget to be dedicated to on-road testing.

(2) The SIP shall include the legal authority necessary to implement the on-road testing program, including the authority to enforce off-cycle inspection and repair requirements.

(3) Emission reduction credit for on-road testing programs shall be granted for a program designed to obtain significant emission reductions over and above those already predicted to be achieved by other aspects of the I/M program. The SIP shall include technical support for the claimed additional emission reductions.

§51.372 State implementation plan submissions.

(a) *SIP submittals.* The SIP shall address each of the elements covered in this subpart, including, but not limited to:

(1) A schedule of implementation of the program including interim milestones leading to mandatory testing. The milestones shall include, at a minimum:

(i) Passage of enabling statutory or other legal authority;

(ii) Proposal of draft regulations and promulgation of final regulations;

(iii) Issuance of final specifications and procedures;

(iv) Issuance of final Request for Proposals (if applicable);

(v) Licensing or certifications of stations and inspectors;

(vi) The date mandatory testing will begin for each model year to be covered by the program;

(vii) The date full-stringency cutpoints will take effect;

(viii) All other relevant dates;

(2) An analysis of emission level targets for the program using the most current EPA mobile source emission model or an alternative approved by the Administrator showing that the program meets the performance standard described in §51.351 or §51.352 of this subpart, as applicable;

(3) A description of the geographic coverage of the program, including ZIP codes if the program is not countywide;

(4) A detailed discussion of each of the required design elements, including provisions for federal facility compliance;

(5) Legal authority requiring or allowing implementation of the I/M program and providing either broad or specific authority to perform all required elements of the program;

(6) Legal authority for I/M program operation until such time as it is no longer necessary (i.e., until a Section 175 maintenance plan without an I/M program is approved by EPA);

(7) Implementing regulations, interagency agreements, and memoranda of understanding; and

(8) Evidence of adequate funding and resources to implement all aspects of the program.

(b) *Submittal schedule.* The SIP shall be submitted to EPA according to the following schedule—

(1) States shall submit a SIP revision by November 15, 1992 which includes the schedule required in paragraph (a)(1) of this section and a formal commitment from the Governor to the adoption and implementation of an I/M program meeting all requirements of this subpart.

(2) A SIP revision, including all necessary legal authority and the items specified in (a)(1) through (a)(8) of this section, shall be submitted no later than November 15, 1993.

(3) States will be required to revise SIPs as EPA develops further regulations. Revisions to incorporate onboard diagnostic checks in the I/M program shall be submitted within 2 years after promulgation of OBD regulations under section 202(m)(3) of the Clean Air Act, as amended.

(c) *Redesignation requests.* Any nonattainment area that EPA determines would otherwise qualify for redesignation from nonattainment to attainment shall receive full approval of a State Implementation Plan (SIP) submittal under Sections 182(a)(2)(B) or 182(b)(4) if the submittal contains the following elements:

(1) Legal authority to implement a basic I/M program (or enhanced if the state chooses to opt up) as required by this subpart. The legislative authority for an I/M program shall allow the adoption of implementing regulations without requiring further legislation.

(2) A request to place the I/M plan (if no I/M program is currently in place or if an I/M program has been terminated,) or the I/M upgrade (if the existing I/M program is to continue without being upgraded) into the contingency measures portion of the maintenance plan upon redesignation.

(3) A contingency measure consisting of a commitment by the Governor or the Governor's designee to adopt or consider adopting regulations to implement an I/M program to correct a violation of the ozone or CO standard or other air quality problem, in accordance with the provisions of the maintenance plan.

(4) A contingency commitment that includes an enforceable schedule for adoption and implementation of the I/M program, and appropriate milestones. The schedule shall include the date for submission of a SIP meeting all of the requirements of this subpart. Schedule milestones shall be listed in months from the date EPA notifies the state that it is in violation of the ozone or CO standard or any earlier date specified in the state plan. Unless the state, in accordance with the provisions of the maintenance plan, chooses not to implement I/M, it must submit a SIP revision containing an I/M program no more than 18 months after notification by EPA.

(d) Basic areas continuing operation of I/M programs as part of their maintenance plan without implemented upgrades shall be assumed to be 80% as effective as an implemented, upgraded version of the same I/M program design, unless a state can demonstrate using operating information that the I/M program is more effective than the 80% level.

(e) *SIP submittals to correct violations.* SIP submissions required pursuant to a violation of the ambient ozone or CO standard (as discussed in paragraph (c) of this section) shall address all of the requirements of this subpart. The SIP shall demonstrate that performance standards in either § 51.351 or § 51.352 shall be met using an evaluation date (rounded to the nearest January for carbon monoxide and July for hydrocarbons) seven years after the date EPA notifies the state that it is in violation of the ozone or CO standard or any earlier date specified in the state plan. Emission standards for vehicles subject to an IM240 test may be phased

in during the program but full standards must be in effect for at least one complete test cycle before the end of the 5-year period. All other requirements shall take effect within 24 months of the date EPA notifies the state that it is in violation of the ozone or CO standard or any earlier date specified in the state plan. The phase-in allowances of §51.373(c) of this subpart shall not apply.

[57 FR 52987, Nov. 5, 1992, as amended at 60 FR 1738, Jan. 5, 1995; 60 FR 48036, Sept. 18, 1995]

§51.373 Implementation deadlines.

I/M programs shall be implemented as expeditiously as practicable.

(a) Decentralized basic programs shall be fully implemented by January 1, 1994, and centralized basic programs shall be fully implemented by July 1, 1994. More implementation time may be approved by the Administrator if an enhanced I/M program is implemented.

(b) For areas newly required to implement basic I/M after promulgation of this subpart (as a result of failure to attain, reclassification, or redesignation) decentralized programs shall be fully implemented within one year of obtaining legal authority. Centralized programs shall be fully implemented within two years of obtaining legal authority. More implementation time may be approved by the Administrator if an enhanced I/M program is implemented.

(c) All requirements related to enhanced I/M programs shall be implemented by January 1, 1995, with the following exceptions.

(1) Areas switching from an existing test-and-repair network to a test-only network may phase in the change between January of 1995 and January of 1996. Starting in January of 1995 at least 30% of the subject vehicles shall participate in the test-only system (in states with multiple I/M areas, implementation is not required in every area by January 1995 as long as statewide, 30% of the subject vehicles are involved in testing) and shall be subject to the new test procedures (including the evaporative system checks, visual inspections, and tailpipe emission tests). By January 1, 1996, all applicable vehicle model years and types shall be included in the test-only system. During the phase-in period, all requirements of this subpart shall be applied to the test-only portion of the program; existing requirements may continue to apply for the test-and-repair portion of the program until it is phased out by January 1, 1996.

(2) Areas starting new test-only programs and those with existing test-only programs may also phase in the new test procedures between January 1, 1995 and January 1, 1996. Other program requirements shall be fully implemented by January 1, 1995.

(d) In the case of areas newly required to implement enhanced I/M after promulgation of this subpart (as a result of failure to attain, reclassification, or nonattainment designation) enhanced I/M shall be implemented within 24 months of obtaining legal authority.

(e) Legal authority for the implementing agency or agencies to implement and enforce an I/M program consistent with this subpart shall be obtained from the state legislature or local governing body in the first legislative session after November 5, 1992, or after being newly required to implement or upgrade an I/M program as in paragraph (b) or (c) of this section, including sessions already in progress if at least 21 days remain before the final bill submittal deadline.

[57 FR 52987, Nov. 5, 1992, as amended at 58 FR 59367, Nov. 9, 1993]

APPENDICES TO SUBPART S OF PART 51

APPENDIX A TO SUBPART S—CALIBRATIONS, ADJUSTMENTS AND QUALITY CONTROL

(I) *Steady-State Test Equipment*

States may opt to use transient emission test equipment for steady-state tests and follow the quality control requirements in paragraph (II) of this appendix instead of the following requirements.

(a) Equipment shall be calibrated in accordance with the manufacturers' instructions.

(b) *Prior to each test.* (1) *Hydrocarbon hang-up check.* Immediately prior to each test the analyzer shall automatically perform a hydrocarbon hang-up check. If the HC reading, when the probe is sampling ambient air, exceeds 20 ppm, the system shall be purged with clean air or zero gas. The analyzer shall

be inhibited from continuing the test until HC levels drop below 20 ppm.

(2) *Automatic zero and span.* The analyzer shall conduct an automatic zero and span check prior to each test. The span check shall include the HC, CO, and CO2 channels, and the NO and O_2 channels, if present. If zero and/or span drift cause the signal levels to move beyond the adjustment range of the analyzer, it shall lock out from testing.

(3) *Low flow.* The system shall lock out from testing if sample flow is below the acceptable level as defined in paragraph (I)(b)(6) of appendix D to this subpart.

(c) *Leak check.* A system leak check shall be performed within twenty-four hours before the test in low volume stations (those performing less than the 4,000 inspections per year) and within four hours in high-volume stations (4,000 or more inspections per year) and may be performed in conjunction with the gas calibration described in paragraph (I)(d)(1) of this appendix. If a leak check is not performed within the preceding twenty-four hours in low volume stations and within four hours in high-volume stations or if the analyzer fails the leak check, the analyzer shall lock out from testing. The leak check shall be a procedure demonstrated to effectively check the sample hose and probe for leaks and shall be performed in accordance with good engineering practices. An error of more than ±2% of the reading using low range span gas shall cause the analyzer to lock out from testing and shall require repair of leaks.

(d) *Gas calibration.* (1) On each operating day in high-volume stations, analyzers shall automatically require and successfully pass a two-point gas calibration for HC, CO, and CO2 and shall continually compensate for changes in barometric pressure. Calibration shall be checked within four hours before the test and the analyzer adjusted if the reading is more than 2% different from the span gas value. In low-volume stations, analyzers shall undergo a two-point calibration within seventy-two hours before each test, unless changes in barometric pressure are compensated for automatically and statistical process control demonstrates equal or better quality control using different frequencies. Gas calibration shall be accomplished by introducing span gas that meets the requirements of paragraph (I)(d)(3) of this appendix into the analyzer through the calibration port. If the analyzer reads the span gas within the allowable tolerance range (i.e., the square root of sum of the squares of the span gas tolerance described in paragraph (I)(d)(3) of this appendix and the calibration tolerance, which shall be equal to 2%), no adjustment of the analyzer is necessary. The gas calibration procedure shall correct readings that exceed the allowable tolerance range to the center of the allowable tolerance range. The pressure in the sample cell shall be the same with the calibration gas flowing during calibration as with the sample gas flowing during sampling. If the system is not calibrated, or the system fails the calibration check, the analyzer shall lock out from testing.

(2) *Span points.* A two point gas calibration procedure shall be followed. The span shall be accomplished at one of the following pairs of span points:

(A) 300—ppm propane (HC)
1.0—% carbon monoxide (CO)
6.0—% carbon dioxide (CO2)
1000—ppm nitric oxide (if equipped with NO)
1200—ppm propane (HC)
4.0—% carbon monoxide (CO)
12.0—% carbon dioxide (CO2)
3000—ppm nitric oxide (if equipped with NO)

(B) 0—ppm propane
0.0—% carbon monoxide
0.0—% carbon dioxide
0—ppm nitric oxide (if equipped with NO)
600—ppm propane (HC)
1.6—% carbon monoxide (CO)
11.0—% carbon dioxide (CO2)
1200—ppm nitric oxide (if equipped with NO)

(3) *Span gases.* The span gases used for the gas calibration shall be traceable to National Institute of Standards and Technology (NIST) standards ±2%, and shall be within two percent of the span points specified in paragraph (d)(2) of this appendix. Zero gases shall conform to the specifications given in §86.114–79(a)(5) of this chapter.

(e) *Dynamometer checks*—(1) *Monthly check.* Within one month preceding each loaded test, the accuracy of the roll speed indicator shall be verified and the dynamometer shall be checked for proper power absorber settings.

(2) *Semi-annual check.* Within six months preceding each loaded test, the road-load response of the variable-curve dynamometer or the frictional power absorption of the dynamometer shall be checked by a coast down procedure similar to that described in §86.118–78 of this chapter. The check shall be done at 30 mph, and a power absorption load setting to generate a total horsepower (hp) of 4.1 hp. The actual coast down time from 45 mph to 15 mph shall be within ±1 second of the time calculated by the following equation:

$$\text{Coast Down Time} = \frac{0.0508 \times W}{HP}$$

where W is the total inertia weight as represented by the weight of the rollers (excluding free rollers), and any inertia flywheels used, measured in pounds. If the coast down time is not within the specified tolerance the dynamometer shall be taken out of service and corrective action shall be taken.

(f) *Other checks.* In addition to the above periodic checks, these shall also be used to verify system performance under the following special circumstances.

(1) *Gas Calibration.* (A) Each time the analyzer electronic or optical systems are repaired or replaced, a gas calibration shall be performed prior to returning the unit to service.

(B) In high-volume stations, monthly multi-point calibrations shall be performed. Low-volume stations shall perform multi-point calibrations every six months. The calibration curve shall be checked at 20%, 40%, 60%, and 80% of full scale and adjusted or repaired if the specifications in appendix D(I)(b)(1) to this subpart are not met.

(2) *Leak checks.* Each time the sample line integrity is broken, a leak check shall be performed prior to testing.

(II) Transient Test Equipment

(a) *Dynamometer.* Once per week, the calibration of each dynamometer and each fly wheel shall be checked by a dynamometer coast-down procedure comparable to that in § 86.118–78 of this chapter between the speeds of 55 to 45 mph, and between 30 to 20 mph. All rotating dynamometer components shall be included in the coast-down check for the inertia weight selected. For dynamometers with uncoupled rolls, the uncoupled rollers may undergo a separate coast-down check. If a vehicle is used to motor the dynamometer to the beginning coast-down speed, the vehicle shall be lifted off the dynamometer rolls before the coast-down test begins. If the difference between the measured coast-down time and the theoretical coast-down time is greater than +1 second, the system shall lock out, until corrective action brings the dynamometer into calibration.

(b) *Constant volume sampler.* (1) The constant volume sampler (CVS) flow calibration shall be checked daily by a procedure that identifies deviations in flow from the true value. Deviations greater than ±4% shall be corrected.

(2) The sample probe shall be cleaned and checked at least once per month. The main CVS venturi shall be cleaned and checked at least once per year.

(3) Verification that flow through the sample probe is adequate for the design shall be done daily. Deviations greater than the design tolerances shall be corrected.

(c) *Analyzer system* —(1) *Calibration checks.* (A) Upon initial operation, calibration curves shall be generated for each analyzer. The calibration curve shall consider the entire range of the analyzer as one curve. At least 6 calibration points plus zero shall be used in the lower portion of the range corresponding to an average concentration of approximately 2 gpm for HC, 30 gpm for CO, 3 gpm for NO_x, and 400 gpm for CO_2. For the case where a low and a high range analyzer is used, the high range analyzer shall use at least 6 calibration points plus zero in the lower portion of the high range scale corresponding to approximately 100% of the full-scale value of the low range analyzer. For all analyzers, at least 6 calibration points shall also be used to define the calibration curve in the region above the 6 lower calibration points. Gas dividers may be used to obtain the intermediate points for the general range classifications specified. The calibration curves generated shall be a polynomial of no greater order than 4th order, and shall fit the date within 0.5% at each calibration point.

(B) For all calibration curves, curve checks, span adjustments, and span checks, the zero gas shall be considered a down-scale reference gas, and the analyzer zero shall be set at the trace concentration value of the specific zero gas used.

(2) The basic curve shall be checked monthly by the same procedure used to generate the curve, and to the same tolerances.

(3) On a daily basis prior to vehicle testing—

(A) The curve for each analyzer shall be checked by adjusting the analyzer to correctly read a zero gas and an up-scale span gas, and then by correctly reading a mid-scale span gas within 2% of point. If the analyzer does not read the mid-scale span point within 2% of point, the system shall lock out. The up-scale span gas concentration for each analyzer shall correspond to approximately 80 percent of full scale, and the mid-point concentration shall correspond to approximately 15 percent of full scale; and

(B) After the up-scale span check, each analyzer in a given facility shall analyze a sample of a random concentration corresponding to approximately 0.5 to 3 times the cut point (in gpm) for the constituent. The value of the random sample may be determined by a gas blender. The deviation in analysis from the sample concentration for each analyzer shall be recorded and compared to the historical mean and standard deviation for the analyzers at the facility and at all facilities. Any reading exceeding 3 sigma shall cause the analyzer to lock out.

(4) *Flame ionization detector check.* Upon initial operation, and after maintenance to the detector, each Flame Ionization Detector (FID) shall be checked, and adjusted if necessary, for proper peaking and characterization. Procedures described in SAE Paper No. 770141 are recommended for this purpose. A copy of this paper may be obtained from the Society of Automotive Engineers, Inc.

(SAE), 400 Commonwealth Drive, Warrendale, Pennsylvania, 15096–0001. Additionally, every month the response of each FID to a methane concentration of approximately 50 ppm CH_4 shall be checked. If the response is outside of the range of 1.10 to 1.20, corrective action shall be taken to bring the FID response within this range. The response shall be computed by the following formula:

$$\text{Ratio of Methane Response} = \frac{\text{FID response in ppmC}}{\text{ppm methane in cylinder}}$$

(5) *Spanning frequency.* The zero and up-scale span point shall be checked, and adjusted if necessary, at 2 hour intervals following the daily mid-scale curve check. If the zero or the up-scale span point drifts by more than 2% for the previous check (except for the first check of the day), the system shall lock out, and corrective action shall be taken to bring the system into compliance.

(6) *Spanning limit checks.* The tolerance on the adjustment of the up-scale span point is 0.4% of point. A software algorithm to perform the span adjustment and subsequent calibration curve adjustment shall be used. However, software up-scale span adjustments greater than ±10% shall cause the system to lock out, requiring system maintenance.

(7) *Integrator checks.* Upon initial operation, and every three months thereafter, emissions from a randomly selected vehicle with official test value greater than 60% of the standard (determined retrospectively) shall be simultaneously sampled by the normal integration method and by the bag method in each lane. The data from each method shall be put into a historical data base for determining normal and deviant performance for each test lane, facility, and all facilities combined. Specific deviations exceeding ±5% shall require corrective action.

(8) *Interference.* CO and CO_2 analyzers shall be checked prior to initial service, and on a yearly basis thereafter, for water interference. The specifications and procedures used shall generally comply with either §86.122–78 or §86.321–79 of this chapter.

(9) *NO_x* converter check. The converter efficiency of the NO_2 to NO converter shall be checked on a weekly basis. The check shall generally conform to §86.123–78 of this chapter, or EPA MVEL Form 305–01. Equivalent methods may be approved by the Administrator.

(10) *NO/NO_x* flow balance. The flow balance between the NO and NO_x test modes shall be checked weekly. The check may be combined with the NO_x convertor check as illustrated in EPA MVEL Form 305–01.

(11) *Additional checks.* Additional checks shall be performed on the HC, CO, CO_2, and NO_x analyzers according to best engineering practices for the measurement technology used to ensure that measurements meet specified accuracy requirements.

(12) *System artifacts (hang-up).* Prior to each test a comparison shall be made between the background HC reading, the HC reading measured through the sample probe (if different), and the zero gas. Deviations from the zero gas greater than 10 parts per million carbon (ppmC) shall cause the analyzer to lock out.

(13) *Ambient background.* The average of the pre-test and post-test ambient background levels shall be compared to the permissible levels of 10 ppmC HC, 20 ppm CO, and 1 ppm NO_x. If the permissible levels are exceeded, the test shall be voided and corrective action taken to lower the ambient background concentrations.

(14) *Analytical gases.* Zero gases shall meet the requirements of §86.114–79(a)(5) of this chapter. NO_x calibration gas shall be a single blend using nitrogen as the diluent. Calibration gas for the flame ionization detector shall be a single blend of propane with a diluent of air. Calibration gases for CO and CO_2 shall be single blends using nitrogen or air as a diluent. Multiple blends of HC, CO, and CO_2 in air may be used if shown to be stable and accurate.

(III) Purge Analysis System

On a daily basis each purge flow meter shall be checked with a simulated purge flow against a reference flow measuring device with performance specifications equal to or better than those specified for the purge meter. The check shall include a mid-scale rate check, and a total flow check between 10 and 20 liters. Deviations greater than ±5% shall be corrected. On a monthly basis, the calibration of purge meters shall be checked for proper rate and total flow with three equally spaced points across the flow rate and the totalized flow range. Deviations exceeding the specified accuracy shall be corrected. The dynamometer quality assurance checks required under paragraph (II) of this appendix shall also apply to the dynamometer used for purge tests.

(IV) Evaporative System Integrity Test Equipment

(a) On a weekly basis pressure measurement devices shall be checked against a reference device with performance specifications equal to or better than those specified for the measurement device. Deviations exceeding the performance specifications shall be corrected. Flow measurement devices, if any, shall be checked according to paragraph III of this appendix.

(b) Systems that monitor evaporative system leaks shall be checked for integrity on a daily basis by sealing and pressurizing.

[57 FR 52987, Nov. 5, 1992, as amended at 58 FR 59367, Nov. 9, 1993]

APPENDIX B TO SUBPART S—TEST PROCEDURES

(I) Idle test

(a) *General requirements*—(1) *Exhaust gas sampling algorithm.* The analysis of exhaust gas concentrations shall begin 10 seconds after the applicable test mode begins. Exhaust gas concentrations shall be analyzed at a minimum rate of two times per second. The measured value for pass/fail determinations shall be a simple running average of the measurements taken over five seconds.

(2) *Pass/fail determination.* A pass or fail determination shall be made for each applicable test mode based on a comparison of the short test standards contained in appendix C to this subpart, and the measured value for HC and CO as described in paragraph (I)(a)(1) of this appendix. A vehicle shall pass the test mode if any pair of simultaneous measured values for HC and CO are below or equal to the applicable short test standards. A vehicle shall fail the test mode if the values for either HC or CO, or both, in all simultaneous pairs of values are above the applicable standards.

(3) *Void test conditions.* The test shall immediately end and any exhaust gas measurements shall be voided if the measured concentration of CO plus CO_2 falls below six percent or the vehicle's engine stalls at any time during the test sequence.

(4) *Multiple exhaust pipes.* Exhaust gas concentrations from vehicle engines equipped with multiple exhaust pipes shall be sampled simultaneously.

(5) This test shall be immediately terminated upon reaching the overall maximum test time.

(b) *Test sequence.* (1) The test sequence shall consist of a first-chance test and a second-chance test as follows:

(i) The first-chance test, as described under paragraph (c) of this section, shall consist of an idle mode.

(ii) The second-chance test as described under paragraph (I)(d) of this appendix shall be performed only if the vehicle fails the first-chance test.

(2) The test sequence shall begin only after the following requirements are met:

(i) The vehicle shall be tested in as-received condition with the transmission in neutral or park and all accessories turned off. The engine shall be at normal operating temperature (as indicated by a temperature gauge, temperature lamp, touch test on the radiator hose, or other visual observation for overheating).

(ii) The tachometer shall be attached to the vehicle in accordance with the analyzer manufacturer's instructions.

(iii) The sample probe shall be inserted into the vehicle's tailpipe to a minimum depth of 10 inches. If the vehicle's exhaust system prevents insertion to this depth, a tailpipe extension shall be used.

(iv) The measured concentration of CO plus CO_2 shall be greater than or equal to six percent.

(c) *First-chance test.* The test timer shall start (tt=0) when the conditions specified in paragraph (I)(b)(2) of this appendix are met. The first-chance test shall have an overall maximum test time of 145 seconds (tt=145). The first-chance test shall consist of an idle mode only.

(1) The mode timer shall start (mt=0) when the vehicle engine speed is between 350 and 1100 rpm. If engine speed exceeds 1100 rpm or falls below 350 rpm, the mode timer shall reset zero and resume timing. The minimum mode length shall be determined as described under paragraph (I)(c)(2) of this appendix. The maximum mode length shall be 90 seconds elapsed time (mt=90).

(2) The pass/fail analysis shall begin after an elapsed time of 10 seconds (mt=10). A pass or fail determination shall be made for the vehicle and the mode shall be terminated as follows:

(i) The vehicle shall pass the idle mode and the test shall be immediately terminated if, prior to an elapsed time of 30 seconds (mt=30), measured values are less than or equal to 100 ppm HC and 0.5 percent CO.

(ii) The vehicle shall pass the idle mode and the test shall be terminated at the end of an elapsed time of 30 seconds (mt=30), if prior to that time the criteria of paragraph (I)(c)(2)(i) of this appendix are not satisfied and the measured values are less than or equal to the applicable short test standards as described in paragraph (I)(a)(2) of this appendix.

(iii) The vehicle shall pass the idle mode and the test shall be immediately terminated if, at any point between an elapsed time of 30 seconds (mt=30) and 90 seconds (mt=90), the measured values are less than or equal to the applicable short test standards as described in paragraph (I)(a)(2) of this appendix.

(iv) The vehicle shall fail the idle mode and the test shall be terminated if none of the provisions of paragraphs (I)(c)(2)(i), (ii) and (iii) of this appendix is satisfied by an elapsed time of 90 seconds (mt=90). Alternatively, the vehicle may be failed if the provisions of paragraphs (I)(c)(2)(i) and (ii) of this appendix are not met within an elapsed time of 30 seconds.

(v) *Optional.* The vehicle may fail the first-chance test and the second-chance test shall be omitted if no exhaust gas concentration

lower than 1800 ppm HC is found by an elapsed time of 30 seconds (mt=30).

(d) *Second-chance test.* If the vehicle fails the first-chance test, the test timer shall reset to zero (tt=0) and a second-chance test shall be performed. The second-chance test shall have an overall maximum test time of 425 seconds (tt=425). The test shall consist of a preconditioning mode followed immediately by an idle mode.

(1) *Preconditioning mode.* The mode timer shall start (mt=0) when the engine speed is between 2200 and 2800 rpm. The mode shall continue for an elapsed time of 180 seconds (mt=180). If engine speed falls below 2200 rpm or exceeds 2800 rmp for more than five seconds in any one excursion, or 15 seconds over all excursions, the mode timer shall reset to zero and resume timing.

(2) *Idle mode*—(i) *Ford Motor Company and Honda vehicles.* The engines of 1981–1987 Ford Motor Company vehicles and 1984–1985 Honda Preludes shall be shut off for not more than 10 seconds and restarted. This procedure may also be used for 1988–1989 Ford Motor Company vehicles but should not be used for other vehicles. The probe may be removed from the tailpipe or the sample pump turned off if necessary to reduce analyzer fouling during the restart procedure.

(ii) The mode timer shall start (mt=0) when the vehicle engine speed is between 350 and 1100 rpm. If engine speed exceeds 1100 rpm or falls below 350 rpm, the mode timer shall reset to zero and resume timing. The minimum idle mode length shall be determined as described in paragraph (I)(d)(2)(iii) of this appendix. The maximum idle mode length shall be 90 seconds elapsed time (mt=90).

(iii) The pass/fail analysis shall begin after an elapsed time of 10 seconds (mt=10). A pass or fail determination shall be made for the vehicle and the idle mode shall be terminated as follows:

(A) The vehicle shall pass the idle mode and the test shall be immediately terminated if, prior to an elapsed time of 30 seconds (mt=30), measured values are less than or equal to 100 ppm HC and 0.5 percent CO.

(B) The vehicle shall pass the idle mode and the test shall be terminated at the end of an elapsed time of 30 seconds (mt=30), if prior to that time the criteria of paragraph (I)(d)(2)(iii)(A) of this appendix are not satisfied and the measured values are less than or equal to the applicable short test standards as described in paragraph (I)(a)(2) of this appendix.

(C) The vehicle shall pass the idle mode and the test shall be immediately terminated if, at any point between an elapsed time of 30 seconds (mt=30) and 90 seconds (mt=90), measured values are less than or equal to the applicable short test standards described in paragraph (I)(a)(2) of this appendix.

(D) The vehicle shall fail the idle mode and the test shall be terminated if none of the provisions of paragraphs (I)(d)(2)(iii)(A), (d)(2)(iii)(B), and (d)(2)(iii)(C) of this appendix are satisfied by an elapsed time of 90 seconds (mt=90).

(II) Two Speed Idle Test

(a) *General requirements*—(1) *Exhaust gas sampling algorithm.* The analysis of exhaust gas concentrations shall begin 10 seconds after the applicable test mode begins. Exhaust gas concentrations shall be analyzed at a rate of two times per second. The measured value for pass/fail determinations shall be a simple running average of the measurements taken over five seconds.

(2) *Pass/fail determination.* A pass or fail determination shall be made for each applicable test mode based on a comparison of the short test standards contained in Appendix C to this subpart, and the measured value for HC and CO as described in paragraph (II)(a)(1) of this appendix. A vehicle shall pass the test mode if any pair of simultaneous values for HC and CO are below or equal to the applicable short test standards. A vehicle shall fail the test mode if the values for either HC or CO, or both, in all simultaneous pairs of values are above the applicable standards.

(3) *Void test conditions.* The test shall immediately end and any exhaust gas measurements shall be voided if the measured concentration of CO plus CO_2 falls below six percent or the vehicle's engine stalls at any time during the test sequence.

(4) *Multiple exhaust pipes.* Exhaust gas concentrations from vehicle engines equipped with multiple exhaust pipes shall be sampled simultaneously.

(5) The test shall be immediately terminated upon reaching the overall maximum test time.

(b) *Test sequence.* (1) The test sequence shall consist of a first-chance test and a second-chance test as follows:

(i) The first-chance test, as described under paragraph (II)(c) of this appendix, shall consist of an idle mode followed by a high-speed mode.

(ii) The second-chance high-speed mode, as described under paragraph (II)(c) of this appendix, shall immediately follow the first-chance high-speed mode. It shall be performed only if the vehicle fails the first-chance test. The second-chance idle mode, as described under paragraph (II)(d) of this appendix, shall follow the second-chance high-speed mode and be performed only if the vehicle fails the idle mode of the first-chance test.

(2) The test sequence shall begin only after the following requirements are met:

(i) The vehicle shall be tested in as-received condition with the transmission in neutral or park and all accessories turned

off. The engine shall be at normal operating temperature (as indicated by a temperature gauge, temperature lamp, touch test on the radiator hose, or other visual observation for overheating).

(ii) The tachometer shall be attached to the vehicle in accordance with the analyzer manufacturer's instructions.

(iii) The sample probe shall be inserted into the vehicle's tailpipe to a minimum depth of 10 inches. If the vehicle's exhaust system prevents insertion to this depth, a tailpipe extension shall be used.

(iv) The measured concentration of CO plus CO_2 shall be greater than or equal to six percent.

(c) *First-chance test and second-chance high-speed mode.* The test timer shall start (tt=0) when the conditions specified in paragraph (b)(2) of this section are met. The first-chance test and second-chance high-speed mode shall have an overall maximum test time of 425 seconds (tt=425). The first-chance test shall consist of an idle mode followed immediately by a high-speed mode. This is followed immediately by an additional second-chance high-speed mode, if necessary.

(1) *First-chance idle mode.* (i) The mode timer shall start (mt=0) when the vehicle engine speed is between 350 and 1100 rpm. If engine speed exceeds 1100 rpm or falls below 350 rpm, the mode timer shall reset to zero and resume timing. The minimum idle mode length shall be determined as described in paragraph (II)(c)(1)(ii) of this appendix. The maximum idle mode length shall be 90 seconds elapsed time (mt=90).

(ii) The pass/fail analysis shall begin after an elapsed time of 10 seconds (mt=10). A pass or fail determination shall be made for the vehicle and the mode terminated as follows:

(A) The vehicle shall pass the idle mode and the mode shall be immediately terminated if, prior to an elapsed time of 30 seconds (mt=30), measured values are less than or equal to 100 ppm HC and 0.5 percent CO.

(B) The vehicle shall pass the idle mode and the mode shall be terminated at the end of an elapsed time of 30 seconds (mt=30) if, prior to that time, the criteria of paragraph (II)(c)(1)(ii)(A) of this appendix are not satisfied, and the measured values are less than or equal to the applicable short test standards as described in paragraph (II)(a)(2) of this appendix.

(C) The vehicle shall pass the idle mode and the mode shall be immediately terminated if, at any point between an elapsed time of 30 seconds (mt=30) and 90 seconds (mt=90), the measured values are less than or equal to the applicable short test standards as described in paragraph (II)(a)(2) of this appendix.

(D) The vehicle shall fail the idle mode and the mode shall be terminated if none of the provisions of paragraphs (II)(c)(1)(ii)(A), (B), and (C) of this appendix is satisfied by an elapsed time of 90 seconds (mt=90). Alternatively, the vehicle may be failed if the provisions of paragraphs (II)(c)(2)(i) and (ii) of this appendix are not met within an elapsed time of 30 seconds.

(E) *Optional.* The vehicle may fail the first-chance test and the second-chance test shall be omitted if no exhaust gas concentration less than 1800 ppm HC is found by an elapsed time of 30 seconds (mt=30).

(2) *First-chance and second-chance high-speed modes.* This mode includes both the first-chance and second-chance high-speed modes, and follows immediately upon termination of the first-chance idle mode.

(i) The mode timer shall reset (mt=0) when the vehicle engine speed is between 2200 and 2800 rpm. If engine speed falls below 2200 rpm or exceeds 2800 rpm for more than two seconds in one excursion, or more than six seconds over all excursions within 30 seconds of the final measured value used in the pass/fail determination, the measured value shall be invalidated and the mode continued. If any excursion lasts for more than ten seconds, the mode timer shall reset to zero (mt=0) and timing resumed. The minimum high-speed mode length shall be determined as described under paragraphs (II)(c)(2)(ii) and (iii) of this appendix. The maximum high-speed mode length shall be 180 seconds elapsed time (mt=180).

(ii) *Ford Motor Company and Honda vehicles.* For 1981–1987 model year Ford Motor Company vehicles and 1984–1985 model year Honda Preludes, the pass/fail analysis shall begin after an elapsed time of 10 seconds (mt=10) using the following procedure. This procedure may also be used for 1988–1989 Ford Motor Company vehicles but should not be used for other vehicles.

(A) A pass or fail determination, as described below, shall be used, for vehicles that passed the idle mode, to determine whether the high-speed test should be terminated prior to or at the end of an elapsed time of 180 seconds (mt=180).

(*1*) The vehicle shall pass the high-speed mode and the test shall be immediately terminated if, prior to an elapsed time of 30 seconds (mt=30), the measured values are less than or equal to 100 ppm HC and 0.5 percent CO.

(*2*) The vehicle shall pass the high-speed mode and the test shall be terminated at the end of an elapsed time of 30 seconds (mt=30) if, prior to that time, the criteria of paragraph (II)(c)(2)(ii)(A)(*1*) of this appendix are not satisfied, and the measured values are less than or equal to the applicable short test standards as described in paragraph (II)(a)(2) of this appendix.

(*3*) The vehicle shall pass the high-speed mode and the test shall be immediately terminated if, at any point between an elapsed time of 30 seconds (mt=30) and 180 seconds (mt=180), the measured values are less than

or equal to the applicable short test standards as described in paragraph (II)(a)(2) of this appendix.

(*4*) *Restart.* If at an elapsed time of 90 seconds (mt=90) the measured values are greater than the applicable short test standards as described in paragraph (II)(a)(2) of this appendix, the vehicle's engine shall be shut off for not more than 10 seconds after returning to idle and then shall be restarted. The probe may be removed from the tailpipe or the sample pump turned off if necessary to reduce analyzer fouling during the restart procedure. The mode timer will stop upon engine shut off (mt=90) and resume upon engine restart. The pass/fail determination shall resume as follows after 100 seconds have elapsed (mt=100).

(*i*) The vehicle shall pass the high-speed mode and the test shall be immediately terminated if, at any point between an elapsed time of 100 seconds (mt=100) and 180 seconds (mt=180), the measured values are less than or equal to the applicable short test standards described in paragraph (II)(a)(2) of this appendix.

(*ii*) The vehicle shall fail the high-speed mode and the test shall be terminated if paragraph (II)(c)(2)(ii)(A)(*4*)(*i*) of this appendix is not satisfied by an elapsed time of 180 seconds (mt=180).

(B) A pass or fail determination shall be made for vehicles that *failed* the idle mode and the high-speed mode terminated at the *end* of an elapsed time of 180 seconds (mt=180) as follows:

(*1*) The vehicle shall pass the high-speed mode and the mode shall be terminated at an elapsed time of 180 seconds (mt=180) if any measured values of HC and CO exhaust gas concentrations during the high-speed mode are less than or equal to the applicable short test standards as described in paragraph (II)(a)(2) of this appendix.

(*2*) *Restart.* If at an elapsed time of 90 seconds (mt=90) the measured values of HC and CO exhaust gas concentrations during the high-speed mode are greater than the applicable short test standards as described in paragraph (II)(a)(2) of this appendix, the vehicle's engine shall be shut off for not more than 10 seconds after returning to idle and then shall be restarted. The probe may be removed from the tailpipe or the sample pump turned off if necessary to reduce analyzer fouling during the restart procedure. The mode timer will stop upon engine shut off (mt=90) and resume upon engine restart. The pass/fail determination shall resume as follows after 100 seconds have elapsed (mt=100).

(*i*) The vehicle shall pass the high-speed mode and the mode shall be terminated at an elapsed time of 180 seconds (mt=180) if any measured values of HC and CO exhaust gas concentrations during the high-speed mode are less than or equal to the applicable short test standards as described in paragraph (II)(a)(2) of this appendix.

(*ii*) The vehicle shall fail the high-speed mode and the test shall be terminated if paragraph (II)(c)(2)(ii)(B)(*2*)(*i*) of this appendix is not satisfied by an elapsed time of 180 seconds (mt=180).

(*iii*) *All other light-duty motor vehicles.* The pass/fail analysis for vehicles not specified in paragraph (II)(c)(2)(ii) of this appendix shall begin after an elapsed time of 10 seconds (mt=10) using the following procedure.

(A) A pass or fail determination, as described below, shall be used for vehicles that passed the idle mode, to determine whether the high-speed mode should be terminated prior to or at the end of an elapsed time of 180 seconds (mt=180).

(*1*) The vehicle shall pass the high-speed mode and the test shall be immediately terminated if, prior to an elapsed time of 30 seconds (mt=30), any measured values are less than or equal to 100 ppm HC and 0.5 percent CO.

(*2*) The vehicle shall pass the high-speed mode and the test shall be terminated at the end of an elapsed time of 30 seconds (mt=30) if, prior to that time, the criteria of paragraph (II)(c)(2)(iii)(A)(*1*) of this appendix are not satisfied, and the measured values are less than or equal to the applicable short test standards as described in paragraph (II)(a)(2) of this appendix.

(*3*) The vehicle shall pass the high-speed mode and the test shall be immediately terminated if, at any point between an elapsed time of 30 seconds (mt=30) and 180 seconds (mt=180), the measured values are less than or equal to the applicable short test standards as described in paragraph (II)(a)(2) of this appendix.

(*4*) The vehicle shall fail the high-speed mode and the test shall be terminated if none of the provisions of paragraphs (II)(c)(2)(iii)(A)(*1*), (*2*), and (*3*) of this appendix is satisfied by an elapsed time of 180 seconds (mt=180).

(B) A pass or fail determination shall be made for vehicles that *failed* the idle mode and the high-speed mode terminated at the *end* of an elapsed time of 180 seconds (mt=180) as follows:

(*1*) The vehicle shall pass the high-speed mode and the mode shall be terminated at an elapsed time of 180 seconds (mt=180) if any measured values are less than or equal to the applicable short test standards as described in paragraph (II)(a)(2) of this appendix.

(*2*) The vehicle shall fail the high-speed mode and the test shall be terminated if paragraph (II)(c)(2)(iii)(B)(*1*) of this appendix is not satisfied by an elapsed time of 180 seconds (mt=180).

(d) *Second-chance idle mode.* If the vehicle fails the first-chance idle mode and passes the high-speed mode, the test timer shall reset to zero (tt=0) and a second-chance idle

mode shall commence. The second-chance idle mode shall have an overall maximum test time of 145 seconds (tt=145). The test shall consist of an idle mode only.

(1) The engines of 1981–1987 Ford Motor Company vehicles and 1984–1985 Honda Preludes shall be shut off for not more than 10 seconds and restarted. The probe may be removed from the tailpipe or the sample pump turned off if necessary to reduce analyzer fouling during the restart procedure. This procedure may also be used for 1988–1989 Ford Motor Company vehicles but should not be used for other vehicles.

(2) The mode timer shall start (mt=0) when the vehicle engine speed is between 350 and 1100 rpm. If the engine speed exceeds 1100 rpm or falls below 350 rpm the mode timer shall reset to zero and resume timing. The minimum second-chance idle mode length shall be determined as described in paragraph (II)(d)(3) of this appendix. The maximum second-chance idle mode length shall be 90 seconds elapsed time (mt=90).

(3) The pass/fail analysis shall begin after an elapsed time of 10 seconds (mt=10). A pass or fail determination shall be made for the vehicle and the second-chance idle mode shall be terminated as follows:

(i) The vehicle shall pass the second-chance idle mode and the test shall be immediately terminated if, prior to an elapsed time of 30 seconds (mt=30), any measured values are less than or equal to 100 ppm HC and 0.5 percent CO.

(ii) The vehicle shall pass the second-chance idle mode and the test shall be terminated at the end of an elapsed time of 30 seconds (mt=30) if, prior to that time, the criteria of paragraph (II)(d)(3)(i) of this appendix are not satisfied, and the measured values are less than or equal to the applicable short test standards as described in paragraph (II)(a)(2) of this appendix.

(iii) The vehicle shall pass the second-chance idle mode and the test shall be immediately terminated if, at any point between an elapsed time of 30 seconds (mt=30) and 90 seconds (mt=90), the measured values are less than or equal to the applicable short test standards as described in paragraph (II)(a)(2) of this appendix.

(iv) The vehicle shall fail the second-chance idle mode and the test shall be terminated if none of the provisions of paragraph (II)(d)(3)(i), (ii), and (iii) of this appendix is satisfied by an elapsed time of 90 seconds (mt=90).

(III) Loaded Test

(a) *General requirements*—(1) *Exhaust gas sampling algorithm.* The analysis of exhaust gas concentrations shall begin 10 seconds after the applicable test mode begins. Exhaust gas concentrations shall be analyzed at a minimum rate of two times per second. The measured value for pass/fail determinations shall be a simple running average of the measurements taken over five seconds.

(2) *Pass/fail determination.* A pass or fail determination shall be made for each applicable test mode based on a comparison of the short test standards contained in Appendix C to this subpart and the measured value for HC and CO as described in paragraph (III)(a)(1) of this appendix. A vehicle shall pass the test mode if any pair of simultaneous values for HC and CO are below or equal to the applicable short test standards. A vehicle shall fail the test mode if the values for either HC or CO, or both, in all simultaneous pairs of values are above the applicable standards.

(3) *Void test conditions.* The test shall immediately end and any exhaust gas measurements shall be voided if the measured concentration of CO plus CO_2 falls below six percent or the vehicle's engine stalls at any time during the test sequence.

(4) *Multiple exhaust pipes.* Exhaust gas concentrations from vehicle engines equipped with multiple exhaust pipes shall be sampled simultaneously.

(5) The test shall be immediately terminated upon reaching the overall maximum test time.

(b) *Test sequence.* (1) The test sequence shall consist of a loaded mode using a chassis dynamometer followed immediately by an idle mode as described under paragraphs (III)(c)(1) and (2) of this appendix.

(2) The test sequence shall begin only after the following requirements are met:

(i) The dynamometer shall be warmed up, in stabilized operating condition, adjusted, and calibrated in accordance with the procedures of appendix A to this subpart. Prior to each test, variable-curve dynamometers shall be checked for proper setting of the road-load indicator or road-load controller.

(ii) The vehicle shall be tested in as-received condition with all accessories turned off. The engine shall be at normal operating temperature (as indicated by a temperature gauge, temperature lamp, touch test on the radiator hose, or other visual observation for overheating).

(iii) The vehicle shall be operated during each mode of the test with the gear selector in the following position:

(A) In drive for automatic transmissions and in second (or third if more appropriate) for manual transmissions for the loaded mode;

(B) In park or neutral for the idle mode.

(iv) The tachometer shall be attached to the vehicle in accordance with the analyzer manufacturer's instructions.

(v) The sample probe shall be inserted into the vehicle's tailpipe to a minimum depth of 10 inches. If the vehicle's exhaust system prevents insertion to this depth, a tailpipe extension shall be used.

(vi) The measured concentration of CO plus CO_2 shall be greater than or equal to six percent.

(c) *Overall test procedure.* The test timer shall start (tt=0) when the conditions specified in paragraph (III)(b)(2) of this appendix are met and the mode timer initiates as specified in paragraph (III)(c)(1) of this appendix. The test sequence shall have an overall maximum test time of 240 seconds (tt=240). The test shall be immediately terminated upon reaching the overall maximum test time.

(1) *Loaded mode*—(i) *Ford Motor Company and Honda vehicles.* (Optional) The engines of 1981–1987 Ford Motor Company vehicles and 1984–1985 Honda Preludes shall be shut off for not more than 10 seconds and restarted. This procedure may also be used for 1988–1989 Ford Motor Company vehicles but should not be used for other vehicles. The probe may be removed from the tailpipe or the sample pump turned off if necessary to reduce analyzer fouling during the restart procedure.

(ii) The mode timer shall start (mt=0) when the dynamometer speed is within the limits specified for the vehicle engine size according to the following schedule. If the dynamometer speed falls outside the limits for more than five seconds in one excursion, or 15 seconds over all excursions, the mode timer shall reset to zero and resume timing. The minimum mode length shall be determined as described in paragraph (III)(c)(1)(iii)(A) of this appendix. The maximum mode length shall be 90 seconds elapsed time (mt=90).

DYNAMOMETER TEST SCHEDULE

Gasoline engine size (cylinders)	Roll speed (mph)	Normal loading (brake horsepower)
4 or less	22–25	2.8–4.1
5–6	29–32	6.8–8.4
7 or more	32–35	8.4–10.8

(iii) The pass/fail analysis shall begin after an elapsed time of 10 seconds (mt=10). A pass or fail determination shall be made for the vehicle and the mode shall be terminated as follows:

(A) The vehicle shall pass the loaded mode and the mode shall be immediately terminated if, at any point between an elapsed time of 30 seconds (mt=30) and 90 seconds (mt=90), measured values are less than or equal to the applicable short test standards described in paragraph (a)(2) of this section.

(B) The vehicle shall fail the loaded mode and the mode shall be terminated if paragraph (III)(c)(1)(iii)(A) of this appendix is not satisfied by an elapsed time of 90 seconds (mt=90).

(C) *Optional.* The vehicle may fail the loaded mode and any subsequent idle mode shall be omitted if no exhaust gas concentration less than 1800 ppm HC is found by an elapsed time of 30 seconds (mt=30).

(2) *Idle mode*—(i) *Ford Motor Company and Honda vehicles.* (Optional) The engines of 1981–1987 Ford Motor Company vehicles and 1984–1985 Honda Preludes shall be shut off for not more than 10 seconds and restarted. This procedure may also be used for 1988–1989 Ford Motor Company vehicles but should not be used for other vehicles. The probe may be removed from the tailpipe or the sample pump turned off if necessary to reduce analyzer fouling during the restart procedure.

(ii) The mode timer shall start (mt=0) when the dynamometer speed is zero and the vehicle engine speed is between 350 and 1100 rpm. If engine speed exceeds 1100 rpm or falls below 350 rpm, the mode timer shall reset to zero and resume timing. The minimum idle mode length shall be determined as described in paragraph (II)(c)(2)(ii) of this appendix. The maximum idle mode length shall be 90 seconds elapsed time (mt=90).

(iii) The pass/fail analysis shall begin after an elapsed time of 10 seconds (mt=10). A pass or fail determination shall be made for the vehicle and the mode shall be terminated as follows:

(A) The vehicle shall pass the idle mode and the test shall be immediately terminated if, prior to an elapsed time of 30 seconds (mt=30), measured values are less than or equal to 100 ppm HC and 0.5 percent CO.

(B) The vehicle shall pass the idle mode and the test shall be terminated at the end of an elapsed time of 30 seconds (mt=30) if, prior to that time, the criteria of paragraph (III)(c)(2)(iii)(A) of this appendix are not satisfied, and the measured values are less than or equal to the applicable short test standards as described in paragraph (III)(a)(2) of this appendix.

(C) The vehicle shall pass the idle mode and the test shall be immediately terminated if, at any point between an elapsed time of 30 seconds (mt=30) and 90 seconds (mt=90), measured values are less than or equal to the applicable short test standards described in paragraph (III)(a)(2) of this appendix.

(D) The vehicle shall fail the idle mode and the test shall be terminated if none of the provisions of paragraphs (III)(c)(2)(iii)(A), (c)(2)(iii)(B), and (c)(2)(iii)(C) of this appendix is satisfied by an elapsed time of 90 seconds (mt=90).

(IV) *Preconditioned IDLE TEST*

(a) *General requirements*—(1) *Exhaust gas sampling algorithm.* The analysis of exhaust gas concentrations shall begin 10 seconds after the applicable test mode begins. Exhaust gas concentrations shall be analyzed at a minimum rate of two times per second. The measured value for pass/fail determinations shall be a simple running average of the measurements taken over five seconds.

(2) *Pass/fail determination.* A pass or fail determination shall be made for each applicable test mode based on a comparison of the short test standards contained in appendix C to this subpart, and the measured value for HC and CO as described in paragraph (IV)(a)(1) of this appendix. A vehicle shall pass the test mode if any pair of simultaneous values for HC and CO are below or equal to the applicable short test standards. A vehicle shall fail the test mode if the values for either HC or CO, or both, in all simultaneous pairs of values are above the applicable standards.

(3) *Void test conditions.* The test shall immediately end and any exhaust gas measurements shall be voided if the measured concentration of CO plus CO_2 falls below six percent or the vehicle's engine stalls at any time during the test sequence.

(4) *Multiple exhaust pipes.* Exhaust gas concentrations from vehicle engines equipped with multiple exhaust pipes shall be sampled simultaneously.

(5) The test shall be immediately terminated upon reaching the overall maximum test time.

(b) *Test sequence.* (1) The test sequence shall consist of a first-chance test and a second-chance test as follows:

(i) The first-chance test, as described under paragraph (IV)(c) of this appendix, shall consist of a preconditioning mode followed by an idle mode.

(ii) The second-chance test, as described under paragraph (IV)(d) of this appendix, shall be performed only if the vehicle fails the first-chance test.

(2) The test sequence shall begin only after the following requirements are met:

(i) The vehicle shall be tested in as-received condition with the transmission in neutral or park and all accessories turned off. The engine shall be at normal operating temperature (as indicated by a temperature gauge, temperature lamp, touch test on the radiator hose, or other visual observation for overheating).

(ii) The tachometer shall be attached to the vehicle in accordance with the analyzer manufacturer's instructions.

(iii) The sample probe shall be inserted into the vehicle's tailpipe to a minimum depth of 10 inches. If the vehicle's exhaust system prevents insertion to this depth, a tailpipe extension shall be used.

(iv) The measured concentration of CO plus CO2 shall be greater than or equal to six percent.

(c) *First-chance test.* The test timer shall start (tt=0) when the conditions specified in paragraph (IV)(b)(2) of this appendix are met. The test shall have an overall maximum test time of 200 seconds (tt=200). The first-chance test shall consist of a preconditioning mode followed immediately by an idle mode.

(1) *Preconditioning mode.* The mode timer shall start (mt=0) when the engine speed is between 2200 and 2800 rpm. The mode shall continue for an elapsed time of 30 seconds (mt=30). If engine speed falls below 2200 rpm or exceeds 2800 rpm for more than five seconds in any one excursion, or 15 seconds over all excursions, the mode timer shall reset to zero and resume timing.

(2) *Idle mode.* (i) The mode timer shall start (mt=0) when the vehicle engine speed is between 350 and 1100 rpm. If engine speed exceeds 1100 rpm or falls below 350 rpm, the mode timer shall reset to zero and resume timing. The minimum idle mode length shall be determined as described in paragraph (IV)(c)(2)(ii) of this appendix. The maximum idle mode length shall be 90 seconds elapsed time (mt=90).

(ii) The pass/fail analysis shall begin after an elapsed time of 10 seconds (mt=10). A pass or fail determination shall be made for the vehicle and the mode shall be terminated as follows:

(A) The vehicle shall pass the idle mode and the test shall be immediately terminated if, prior to an elapsed time of 30 seconds (mt=30), measured values are less than or equal to 100 ppm HC and 0.5 percent CO.

(B) The vehicle shall pass the idle mode and the test shall be terminated at the end of an elapsed time of 30 seconds (mt=30) if, prior to that time, the criteria of paragraph (IV)(c)(2)(ii)(A) of this appendix are not satisfied, and the measured values are less than or equal to the applicable short test standards as described in paragraph (IV)(a)(2) of this appendix.

(C) The vehicle shall pass the idle mode and the test shall be immediately terminated if, at any point between an elapsed time of 30 seconds (mt=30) and 90 seconds (mt=90), measured values are less than or equal to the applicable short test standards as described in paragraph (IV)(a)(2) of this section.

(D) The vehicle shall fail the idle mode and the test shall be terminated if none of the provisions of paragraphs (IV)(c)(2)(ii)(A), (B), and (C) of this appendix is satisfied by an elapsed time of 90 seconds (mt=90). Alternatively, the vehicle may be failed if the provisions of paragraphs (IV)(c)(2) (i) and (ii) of this appendix are not met within an elapsed time of 30 seconds.

(E) *Optional.* The vehicle may fail the first-chance test and the second-chance test shall be omitted if no exhaust gas concentration less than 1800 ppm HC is found at an elapsed time of 30 seconds (mt=30).

(d) *Second-chance test.* If the vehicle fails the first-chance test, the test timer shall reset to zero and a second-chance test shall be performed. The second-chance test shall have an overall maximum test time of 425

seconds. The test shall consist of a preconditioning mode followed immediately by an idle mode.

(1) *Preconditioning mode.* The mode timer shall start (mt=0) when engine speed is between 2200 and 2800 rpm. The mode shall continue for an elapsed time of 180 seconds (mt=180). If the engine speed falls below 2200 rpm or exceeds 2800 rpm for more than five seconds in any one excursion, or 15 seconds over all excursions, the mode timer shall reset to zero and resume timing.

(2) *Idle mode*—(i) *Ford Motor Company and Honda vehicles.* The engines of 1981–1987 Ford Motor Company vehicles and 1984–1985 Honda Preludes shall be shut off for not more than 10 seconds and then shall be restarted. The probe may be removed from the tailpipe or the sample pump turned off if necessary to reduce analyzer fouling during the restart procedure. This procedure may also be used for 1988–1989 Ford Motor Company vehicles but should not be used for other vehicles.

(ii) The mode timer shall start (mt=0) when the vehicle engine speed is between 350 and 1100 rpm. If the engine speed exceeds 1100 rpm or falls below 350 rpm, the mode timer shall reset to zero and resume timing. The minimum idle mode length shall be determined as described in paragraph (IV)(d)(2)(iii) of this appendix. The maximum idle mode length shall be 90 seconds elapsed time (mt=90).

(iii) The pass/fail analysis shall begin after an elapsed time of 10 seconds (mt=10). A pass or fail determination shall be made for the vehicle and the mode shall be terminated as follows:

(A) The vehicle shall pass the idle mode and the test shall be immediately terminated if, prior to an elapsed time of 30 seconds (mt=30), measured values are less than or equal to 100 ppm HC and 0.5 percent CO.

(B) The vehicle shall pass the idle mode and the test shall be terminated at the end of an elapsed time of 30 seconds (mt=30) if, prior to that time, the criteria of paragraph (IV)(d)(2)(iii)(A) of this appendix are not satisfied, and the measured values are less than or equal to the applicable short test standards as described in paragraph (IV)(a)(2) of this appendix.

(C) The vehicle shall pass the idle mode and the test shall be immediately terminated if, at any point between an elapsed time of 30 seconds (mt=30) and 90 seconds (mt=90), measured values are less than or equal to the applicable short test standards described in paragraph (IV)(a)(2) of this appendix.

(D) The vehicle shall fail the idle mode and the test shall be terminated if none of the provisions of paragraphs (IV)(d)(2)(iii) (A), (B), and (C) of this appendix is satisfied by an elapsed time of 90 seconds (mt=90).

(V) *Idle Test With Loaded Preconditioning*

(a) *General requirements*—(1) *Exhaust gas sampling algorithm.* The analysis of exhaust gas concentrations shall begin 10 seconds after the applicable test mode begins. Exhaust gas concentrations shall be analyzed at a minimum rate of two times per second. The measured value for pass/fail determinations shall be a simple running average of the measurements taken over five seconds.

(2) *Pass/fail determination.* A pass or fail determination shall be made for each applicable test mode based on a comparison of the short test standards contained in appendix C to this subpart, and the measured value for HC and CO as described in paragraph (V)(a)(1) of this appendix. A vehicle shall pass the test mode if any pair of simultaneous values for HC and CO are below or equal to the applicable short test standards. A vehicle shall fail the test mode if the values for either HC or CO, or both, in all simultaneous pairs of values are above the applicable standards.

(3) *Void test conditions.* The test shall immediately end and any exhaust gas measurements shall be voided if the measured concentration of CO plus CO_2 falls below six percent or the vehicle's engine stalls at any time during the test sequence.

(4) *Multiple exhaust pipes.* Exhaust gas concentrations from vehicle engines equipped with multiple exhaust pipes shall be sampled simultaneously.

(5) The test shall be immediately terminated upon reaching the overall maximum test time.

(b) *Test sequence.* (1) The test sequence shall consist of a first-chance test and a second-chance test as follows:

(i) The first-chance test, as described under paragraph (V)(c) of this appendix, shall consist of an idle mode.

(ii) The second-chance test as described under paragraph (V)(d) of this appendix shall be performed only if the vehicle fails the first-chance test.

(2) The test sequence shall begin only after the following requirements are met:

(i) The dynamometer shall be warmed up, in stabilized operating condition, adjusted, and calibrated in accordance with the procedures of appendix A to this subpart. Prior to each test, variable-curve dynamometers shall be checked for proper setting of the road-load indicator or road-load controller.

(ii) The vehicle shall be tested in as-received condition with all accessories turned off. The engine shall be at normal operating temperature (as indicated by a temperature gauge, temperature lamp, touch test on the radiator hose, or other visual observation for overheating).

(iii) The vehicle shall be operated during each mode of the test with the gear selector in the following position:

(A) In drive for automatic transmissions and in second (or third if more appropriate)

for manual transmissions for the loaded preconditioning mode;

(B) In park or neutral for the idle mode.

(iv) The tachometer shall be attached to the vehicle in accordance with the analyzer manufacturer's instructions.

(v) The sample probe shall be inserted into the vehicle's tailpipe to a minimum depth of 10 inches. If the vehicle's exhaust system prevents insertion to this depth, a tailpipe extension shall be used.

(vi) The measured concentration of CO plus CO_2 shall be greater than or equal to six percent.

(c) *First-chance test.* The test timer shall start (tt=0) when the conditions specified in paragraph (V)(b)(2) of this appendix are met. The test shall have an overall maximum test time of 155 seconds (tt=155). The first-chance test shall consist of an idle mode only.

(1) The mode timer shall start (mt=0) when the vehicle engine speed is between 350 and 1100 rpm. If the engine speed exceeds 1100 rpm or falls below 350 rpm, the mode timer shall reset to zero and resume timing. The minimum mode length shall be determined as described in paragraph (V)(c)(2) of this appendix. The maximum mode length shall be 90 seconds elapsed time (mt=90).

(2) The pass/fail analysis shall begin after an elapsed time of 10 seconds (mt=10). A pass or fail determination shall be made for the vehicle and the mode shall be terminated as follows:

(i) The vehicle shall pass the idle mode and the test shall be immediately terminated if, prior to an elapsed time of 30 seconds (mt=30), measured values are less than or equal to 100 ppm HC and 0.5 percent CO.

(ii) The vehicle shall pass the idle mode and the test shall be terminated at the end of an elapsed time of 30 seconds (mt=30) if, prior to that time, the criteria of paragraph (V)(c)(2)(i) of this appendix are not satisfied, and the measured values are less than or equal to the applicable short test standards as described in paragraph (V)(a)(2) of this appendix.

(iii) The vehicle shall pass the idle mode and the test shall be immediately terminated if, at any point between an elapsed time of 30 seconds (mt=30) and 90 seconds (mt=90), the measured values are less than or equal to the applicable short test standards as described in paragraph (V)(a)(2) of this appendix.

(iv) The vehicle shall fail the idle mode and the test shall be terminated if none of the provisions of paragraphs (V)(c)(2)(i), (ii), and (iii) of this appendix is satisfied by an elapsed time of 90 seconds (mt=90). Alternatively, the vehicle may be failed if the provisions of paragraphs (V)(c)(2) (i) and (ii) of this appendix are not met within an elapsed time of 30 seconds.

(v) *Optional.* The vehicle may fail the first-chance test and the second-chance test shall be omitted if no exhaust gas concentration less than 1800 ppm HC is found at an elapsed time of 30 seconds (mt=30).

(d) *Second-chance test.* If the vehicle fails the first-chance test, the test timer shall reset to zero (tt=0) and a second-chance test shall be performed. The second-chance test shall have an overall maximum test time of 200 seconds (tt=200). The test shall consist of a preconditioning mode using a chassis dynamometer, followed immediately by an idle mode.

(1) *Preconditioning mode.* The mode timer shall start (mt=0) when the dynamometer speed is within the limits specified for the vehicle engine size in accordance with the following schedule. The mode shall continue for a minimum elapsed time of 30 seconds (mt=30). If the dynamometer speed falls outside the limits for more than five seconds in one excursion, or 15 seconds over all excursions, the mode timer shall reset to zero and resume timing.

Gasoline engine size (cylinders)	Dynamometer test schedule	
	Roll speed (mph)	Normal loading (brake horsepower)
4 or less	22–25	2.8–4.1
5–6	29–32	6.8–8.4
7 or more	32–35	8.4–10.8

(2) *Idle mode.* (i) *Ford Motor Company and Honda vehicles.* (Optional) The engines of 1981–1987 Ford Motor Company vehicles and 1984–1985 Honda Preludes shall be shut off for not more than 10 seconds and restarted. This procedure may also be used for 1988–1989 Ford Motor Company vehicles but should not be used for other vehicles. The probe may be removed from the tailpipe or the sample pump turned off if necessary to reduce analyzer fouling during the restart procedure.

(ii) The mode timer shall start (mt=0) when the dynamometer speed is zero and the vehicle engine speed is between 350 and 1100 rpm. If the engine speed exceeds 1100 rpm or falls below 350 rpm, the mode timer shall reset to zero and resume timing. The minimum idle mode length shall be determined as described in paragraph (V)(d)(2)(ii) of this appendix. The maximum idle mode length shall be 90 seconds elapsed time (mt=90).

(iii) The pass/fail analysis shall begin after an elapsed time of 10 seconds (mt=10). A pass or fail determination shall be made for the vehicle and the mode shall be terminated as follows:

(A) The vehicle shall pass the idle mode and the test shall be immediately terminated if, prior to an elapsed time of 30 seconds (mt=30), measured values are less than or equal to 100 ppm HC and 0.5 percent CO.

(B) The vehicle shall pass the idle mode and the test shall be terminated at the end of an elapsed time of 30 seconds (mt=30) if, prior to that time, the criteria of paragraph (V)(d)(2)(ii)(A) of this appendix are not satisfied, and the measured values are less than or equal to the applicable short test standards as described in paragraph (V)(a)(2) of this appendix.

(C) The vehicle shall pass the idle mode and the test shall be immediately terminated if, at any point between an elapsed time of 30 seconds (mt=30) and 90 seconds (mt=90), the measured values are less than or equal to the applicable short test standards as described in paragraph (V)(a)(2) of this appendix.

(D) The vehicle shall fail the idle mode and the test shall be terminated if none of the provisions of paragraphs (V)(d)(2)(ii)(A), (B), and (C) of this appendix is satisfied by an elapsed time of 90 seconds (mt=90).

(VI) Preconditioned Two Speed Idle Test

(a) *General requirements*—(1) *Exhaust gas sampling algorithm.* The analysis of exhaust gas concentrations shall begin 10 seconds after the applicable test mode begins. Exhaust gas concentrations shall be analyzed at a minimum rate of two times per second. The measured value for pass/fail determinations shall be a simple running average of the measurements taken over five seconds.

(2) *Pass/fail determination.* A pass or fail determination shall be made for each applicable test mode based on a comparison of the short test standards contained in appendix C to this subpart, and the measured value for HC and CO as described in paragraph (VI)(a)(1) of this appendix. A vehicle shall pass the test mode if any pair of simultaneous values for HC and CO are below or equal to the applicable short test standards. A vehicle shall fail the test mode if the values for either HC or CO, or both, in all simultaneous pairs of values are above the applicable standards.

(3) *Void test conditions.* The test shall immediately end and any exhaust gas measurements shall be voided if the measured concentration of CO plus CO_2 falls below six percent or the vehicle's engine stalls at any time during the test sequence.

(4) *Multiple exhaust pipes.* Exhaust gas concentrations from vehicle engines equipped with multiple exhaust pipes shall be sampled simultaneously.

(5) The test shall be immediately terminated upon reaching the overall maximum test time.

(b) *Test sequence.*—(1) The test sequence shall consist of a first-chance test and a second-chance test as follows:

(i) The first-chance test, as described under paragraph (VI)(c) of this appendix, shall consist of a first-chance high-speed mode followed immediately by a first-chance idle mode.

(ii) The second-chance test as described under paragraph (VI)(d) of this appendix shall be performed only if the vehicle fails the first-chance test.

(2) The test sequence shall begin only after the following requirements are met:

(i) The vehicle shall be tested in as-received condition with the transmission in neutral or park and all accessories turned off. The engine shall be at normal operating temperature (as indicated by a temperature gauge, temperature lamp, touch test on the radiator hose, or other visual observation for overheating).

(ii) The tachometer shall be attached to the vehicle in accordance with the analyzer manufacturer's instructions.

(iii) The sample probe shall be inserted into the vehicle's tailpipe to a minimum depth of 10 inches. If the vehicle's exhaust system prevents insertion to this depth, a tailpipe extension shall be used.

(iv) The measured concentration of CO plus CO_2 shall be greater than or equal to six percent.

(c) *First-chance test.* The test timer shall start (tt=0) when the conditions specified in paragraph (VI)(b)(2) of this appendix are met. The test shall have an overall maximum test time of 290 seconds (tt=290). The first-chance test shall consist of a high-speed mode followed immediately by an idle mode.

(1) *First-chance high-speed mode.* (i) The mode timer shall reset (mt=0) when the vehicle engine speed is between 2200 and 2800 rpm. If the engine speed falls below 2200 rpm or exceeds 2800 rpm for more than two seconds in one excursion, or more than six seconds over all excursions within 30 seconds of the final measured value used in the pass/fail determination, the measured value shall be invalidated and the mode continued. If any excursion lasts for more than ten seconds, the mode timer shall reset to zero (mt=0) and timing resumed. The high-speed mode length shall be 90 seconds elapsed time (mt=90).

(ii) The pass/fail analysis shall begin after an elapsed time of 10 seconds (mt=10). A pass or fail determination shall be made for the vehicle and the mode shall be terminated as follows:

(A) The vehicle shall pass the high-speed mode and the mode shall be terminated at an elapsed time of 90 seconds (mt=90) if any measured values are less than or equal to the applicable short test standards as described in paragraph (VI)(a)(2) of this appendix.

(B) The vehicle shall fail the high-speed mode and the mode shall be terminated if the requirements of paragraph (VI)(c)(1)(ii)(A) of this appendix are not satisfied by an elapsed time of 90 seconds (mt=90).

(C) *Optional.* The vehicle shall fail the first-chance test and any subsequent test

shall be omitted if no exhaust gas concentration lower than 1800 ppm HC is found at an elapsed time of 30 seconds (mt=30).

(2) *First-chance idle mode.* (i) The mode timer shall start (mt=0) when the vehicle engine speed is between 350 and 1100 rpm. If the engine speed exceeds 1100 rpm or falls below 350 rpm, the mode timer shall reset to zero and resume timing. The minimum first-chance idle mode length shall be determined as described in paragraph (VI)(c)(2)(ii) of this appendix. The maximum first-chance idle mode length shall be 90 seconds elapsed time (mt=90).

(ii) The pass/fail analysis shall begin after an elapsed time of 10 seconds (mt=10). A pass or fail determination shall be made for the vehicle and the mode shall be terminated as follows:

(A) The vehicle shall pass the idle mode and the test shall be immediately terminated if, prior to an elapsed time of 30 seconds (mt=30), measured values are less than or equal to 100 ppm HC and 0.5 percent CO.

(B) The vehicle shall pass the idle mode and the test shall be terminated at the end of an elapsed time of 30 seconds (mt=30) if, prior to that time, the criteria of paragraph (VI)(c)(2)(ii)(A) of this appendix are not satisfied, and the measured values are less than or equal to the applicable short test standards as described in paragraph (VI)(a)(2) of this appendix.

(C) The vehicle shall pass the idle mode and the test shall be immediately terminated if, at any point between an elapsed time of 30 seconds (mt=30) and 90 seconds (mt=90), the measured values are less than or equal to the applicable short test standards as described in paragraph (VI)(a)(2) of this appendix.

(D) The vehicle shall fail the idle mode and the test shall be terminated if none of the provisions of paragraphs (VI)(c)(2)(ii) (A), (B), and (C) of this appendix is satisfied by an elapsed time of 90 seconds (mt=90). Alternatively, the vehicle may be failed if the provisions of paragraphs (VI)(c)(2)(i) and (ii) of this appendix are not met within the elapsed time of 30 seconds.

(d) *Second-chance test.* (1) If the vehicle fails either mode of the first-chance test, the test timer shall reset to zero (tt=0) and a second-chance test shall commence. The second-chance test shall be performed based on the first-chance test failure mode or modes as follows:

(A) If the vehicle failed only the first-chance high-speed mode, the second-chance test shall consist of a second-chance high-speed mode as described in paragraph (VI)(d)(2) of this appendix. The overall maximum test time shall be 280 seconds (tt=280).

(B) If the vehicle failed only the first-chance idle mode, the second-chance test shall consist of a second-chance pre-conditioning mode followed immediately by a second-chance idle mode as described in paragraphs (VI)(d) (3) and (4) of this appendix. The overall maximum test time shall be 425 seconds (tt=425).

(C) If both the first-chance high-speed mode and first-chance idle mode were failed, the second-chance test shall consist of the second-chance high-speed mode followed immediately by the second-chance idle mode as described in paragraphs (VI)(d) (2) and (4) of this appendix. However, if during this second-chance procedure the vehicle fails the second-chance high-speed mode, then the second-chance idle mode may be eliminated. The overall maximum test time shall be 425 seconds (tt=425).

(2) *Second-chance high-speed mode*—(i) *Ford Motor Company and Honda vehicles.* The engines of 1981–1987 Ford Motor Company vehicles and 1984–1985 Honda Preludes shall be shut off for not more than 10 seconds and then shall be restarted. The probe may be removed from the tailpipe or the sample pump turned off if necessary to reduce analyzer fouling during the restart procedure. This procedure may also be used for 1988–1989 Ford Motor Company vehicles but should not be used for other vehicles.

(ii) The mode timer shall reset (mt=0) when the vehicle engine speed is between 2200 and 2800 rpm. If the engine speed falls below 2200 rpm or exceeds 2800 rpm for more than two seconds in one excursion, or more than six seconds over all excursions within 30 seconds of the final measured value used in the pass/fail determination, the measured value shall be invalidated and the mode continued. The minimum second-chance high-speed mode length shall be determined as described in paragraphs (VI)(d)(2) (iii) and (iv) of this appendix. If any excursion lasts for more than ten seconds, the mode timer shall reset to zero (mt=0) and timing resumed. The maximum second-chance high-speed mode length shall be 180 seconds elapsed time (mt=180).

(iii) In the case where the second-chance high-speed mode is *not* followed by the second-chance idle mode, the pass/fail analysis shall begin after an elapsed time of 10 seconds (mt=10). A pass or fail determination shall be made for the vehicle and the mode shall be terminated as follows:

(A) The vehicle shall pass the high-speed mode and the test shall be immediately terminated if, prior to an elapsed time of 30 seconds (mt=30), measured values are less than or equal to 100 ppm HC and 0.5 percent CO.

(B) The vehicle shall pass the high-speed mode and the test shall be terminated if at the end of an elapsed time of 30 seconds (mt=30) if, prior to that time, the criteria of paragraph (VI)(d)(2)(iii)(A) of this appendix are not satisfied, and the measured values are less than or equal to the applicable short test standards as described in paragraph (VI)(a)(2) of this appendix.

(C) The vehicle shall pass the high-speed mode and the test shall be immediately terminated if, at any point between an elapsed time for 30 seconds (mt=30) and 180 seconds (mt=180), the measured values are less than or equal to the applicable short test standards as described in paragraph (VI)(a)(2) of this appendix.

(D) The vehicle shall fail the high-speed mode and the test shall be terminated if none of the provisions of paragraphs (VI)(d)(2)(iii) (A), (B), and (C) of this appendix is satisfied by an elapsed time of 180 seconds (mt=180).

(iv) In the case where the second-chance high-speed mode *is* followed by the second-chance idle mode, the pass/fail analysis shall begin after an elapsed time of 10 seconds (mt=10). A pass or fail determination shall be made for the vehicle and the mode shall be terminated as follows:

(A) The vehicle shall pass the high-speed mode and the mode shall be terminated at the end of an elapsed time of 180 seconds (mt=180) if any measured values are less than or equal to the applicable short test standards as described in paragraph (VI)(a)(2) of this appendix.

(B) The vehicle shall fail the high-speed mode and the mode shall be terminated if paragraph (VI)(d)(2)(iv)(A) of this appendix is not satisfied by an elapsed time of 180 seconds (mt=180).

(3) *Second-chance preconditioning mode.* The mode timer shall start (mt=0) when engine speed is between 2200 and 2800 rpm. The mode shall continue for an elapsed time of 180 seconds (mt=180). If the engine speed falls below 2200 rpm or exceeds 2800 rpm for more than five seconds in any one excursion, or 15 seconds over all excursions, the mode timer shall reset to zero and resume timing.

(4) *Second-chance idle mode*—(i) *Ford Motor Company and Honda vehicles.* The engines of 1981–1987 Ford Motor Company vehicles and 1984–1985 Honda Preludes shall be shut off for not more than 10 seconds and then shall be restarted. The probe may be removed from the tailpipe or the sample pump turned off if necessary to reduce analyzer fouling during the restart procedure. This procedure may also be used for 1988–1989 Ford Motor Company vehicles but should not be used for other vehicles.

(ii) The mode timer shall start (mt=0) when the vehicle engine speed is between 350 and 1100 rpm. If the engine exceeds 1100 rpm or falls below 350 rpm the mode timer shall reset to zero and resume timing. The minimum second-chance idle mode length shall be determined as described in paragraph (VI)(d)(4)(iii) of this appendix. The maximum second-chance idle mode length shall be 90 seconds elapsed time (mt=90).

(iii) The pass/fail analysis shall begin after an elapsed time of 10 seconds (mt=10). A pass or fail determination shall be made for the vehicle and the mode shall be terminated as follows:

(A) The vehicle shall pass the second-chance idle mode and the test shall be immediately terminated if, prior to an elapsed time of 30 seconds (mt=30), measured values are less than or equal to 100 ppm HC and 0.5 percent CO.

(B) The vehicle shall pass the second-chance idle mode and the test shall be terminated at the end of an elapsed time of 30 seconds (mt=30) if, prior to that time, the criteria of paragraph (VI)(d)(4)(iii)(A) of this appendix are not satisfied, and the measured values are less than or equal to the applicable short test standards as described in paragraph (VI)(a)(2) of this appendix.

(C) The vehicle shall pass the second-chance idle mode and the test shall be immediately terminated if, at any point between an elapsed time of 30 seconds (mt=30) and 90 seconds (mt=90), measured values are less than or equal to the applicable short test standards described in paragraph (VI)(a)(2) of this appendix.

(D) The vehicle shall fail the second-chance idle mode and the test shall be terminated if none of the provisions of paragraphs (VI)(d)(4)(iii) (A), (B), and (C) of this appendix is satisfied by an elapsed time of 90 seconds (mt=90).

APPENDIX C TO SUBPART S—STEADY-STATE SHORT TEST STANDARDS

(I) Short Test Standards for 1981 and Later Model Year Light-Duty Vehicles

For 1981 and later model year light-duty vehicles for which any of the test procedures described in appendix B to this subpart are utilized to establish Emissions Performance Warranty eligibility (i.e., 1981 and later model year light-duty vehicles at low altitude and 1982 and later model year vehicles at high altitude to which high altitude certification standards of 1.5 gpm HC and 15 gpm CO or less apply), short test emissions for all tests and test modes shall not exceed:

(a) Hydrocarbons: 220 ppm as hexane.

(b) Carbon monoxide: 1.2%.

(II) Short Test Standards for 1981 and Later Model Year Light-Duty Trucks

For 1981 and later model year light-duty trucks for which any of the test procedures described in appendix B to this subpart are utilized to establish Emissions Performance Warranty eligibility (i.e., 1981 and later model year light-duty trucks at low altitude and 1982 and later model year trucks at high altitude to which high altitude certification standards of 2.0 gpm HC and 26 gpm CO or less apply), short test emissions for all tests and test modes shall not exceed:

(a) Hydrocarbons: 220 ppm as hexane.

(b) Carbon monoxide: 1.2%.

APPENDIX D TO SUBPART S—STEADY-STATE SHORT TEST EQUIPMENT

(I) Steady-State Test Exhaust Analysis System

(a) *Sampling system*—(1) *General requirements.* The sampling system for steady-state short tests shall, at a minimum, consist of a tailpipe probe, a flexible sample line, a water removal system, particulate trap, sample pump, flow control components, tachometer or dynamometer, analyzers for HC, CO, and CO_2, and digital displays for exhaust concentrations of HC, CO, and CO_2, and engine rpm. Materials that are in contact with the gases sampled shall not contaminate or change the character of the gases to be analyzed, including gases from alcohol fueled vehicles. The probe shall be capable of being inserted to a depth of at least ten inches into the tailpipe of the vehicle being tested, or into an extension boot if one is used. A digital display for dynamometer speed and load shall be included if the test procedures described in appendix B to this subpart, paragraphs (III) and (V), are conducted. Minimum specifications for optional NO analyzers are also described in this appendix. The analyzer system shall be able to test, as specified in at least one section in appendix B to this subpart, all model vehicles in service at the time of sale of the analyzer.

(2) *Temperature operating range.* The sampling system and all associated hardware shall be of a design certified to operate within the performance specifications described in paragraph (I)(b) of this appendix in ambient air temperatures ranging from 41 to 110 degrees Fahrenheit. The analyzer system shall, where necessary, include features to keep the sampling system within the specified range.

(3) *Humidity operating range.* The sampling system and all associated hardware shall be of a design certified to operate within the performance specifications described in paragraph (I)(b) of this appendix at a minimum of 80 percent relative humidity throughout the required temperature range.

(4) *Barometric pressure compensation.* Barometric pressure compensation shall be provided. Compensation shall be made for elevations up to 6,000 feet (above mean sea level). At any given altitude and ambient conditions specified in paragraph (I)(b) of this appendix, errors due to barometric pressure changes of ±2 inches of mercury shall not exceed the accuracy limits specified in paragraph (I)(b) of this appendix.

(5) *Dual sample probe requirements.* When testing a vehicle with dual exhaust pipes, a dual sample probe of a design certified by the analyzer manufacturer to provide equal flow in each leg shall be used. The equal flow requirement is considered to be met if the flow rate in each leg of the probe has been measured under two sample pump flow rates (the normal rate and a rate equal to the onset of low flow), and if the flow rates in each of the legs are found to be equal to each other (within 15% of the flow rate in the leg having lower flow).

(6) *System lockout during warm-up.* Functional operation of the gas sampling unit shall remain disabled through a system lockout until the instrument meets stability and warm-up requirements. The instrument shall be considered ''warmed up'' when the zero and span readings for HC, CO, and CO_2 have stabilized, within ±3% of the full range of low scale, for five minutes without adjustment.

(7) *Electromagnetic isolation and interference.* Electromagnetic signals found in an automotive service environment shall not cause malfunctions or changes in the accuracy in the electronics of the analyzer system. The instrument design shall ensure that readings do not vary as a result of electromagnetic radiation and induction devices normally found in the automotive service environment, including high energy vehicle ignition systems, radio frequency transmission radiation sources, and building electrical systems.

(8) *Vibration and shock protection.* System operation shall be unaffected by the vibration and shock encountered under the normal operating conditions encountered in an automotive service environment.

(9) *Propane equivalency factor.* The propane equivalency factor shall be displayed in a manner that enables it to be viewed conveniently, while permitting it to be altered only by personnel specifically authorized to do so.

(b) *Analyzers*—(1) *Accuracy.* The analyzers shall be of a design certified to meet the following accuracy requirements when calibrated to the span points specified in appendix A to this subpart:

Channel	Range	Accuracy	Noise	Repeatability
HC, ppm	0–400	±12	6	8
as hexane	401–1000	± 30	10	15
	1001–2000	± 80	20	30
CO, %	0–2.00	± 0.06	0.02	0.03
	2.01–5.00	± 0.15	0.06	0.08
	5.01–9.99	± 0.40	0.10	0.15
CO_2, %	0–4.0	± 0.6	0.2	0.3
	4.1–14.0	± 0.5	0.2	0.3
NO, ppm	0–1000	± 32	16	20
	1001–2000	± 60	25	30

Channel	Range	Accuracy	Noise	Repeatability
	2001–4000	± 120	50	60

(2) *Minimum analyzer display resolution.* The analyzer electronics shall have sufficient resolution to achieve the following:

HC ..... 1ppm HC as hexane.
CO ..... 0.01% CO.
CO_2 ..... 0.1% CO_2.
NO ..... 1ppm NO.
RPM ..... 1rpm.

(3) *Response time.* The response time from the probe to the display for HC, CO, and CO_2 analyzers shall not exceed eight seconds to 90% of a step change in input. For NO analyzers, the response time shall not exceed twelve seconds to 90% of a step change in input.

(4) *Display refresh rate.* Dynamic information being displayed shall be refreshed at a minimum rate of twice per second.

(5) *Interference effects.* The interference effects for non-interest gases shall not exceed ±10 ppm for hydrocarbons, ±0.05 percent for carbon monoxide, ±0.20 percent for carbon dioxide, and ±20 ppm for oxides of nitrogen.

(6) *Low flow indication.* The analyzer shall provide an indication when the sample flow is below the acceptable level. The sampling system shall be equipped with a flow meter (or equivalent) that shall indicate sample flow degradation when meter error exceeds three percent of full scale, or causes system response time to exceed 13 seconds to 90 percent of a step change in input, whichever is less.

(7) *Engine speed detection.* The analyzer shall utilize a tachometer capable of detecting engine speed in revolutions per minute (rpm) with a 0.5 second response time and an accuracy of ±3% of the true rpm.

(8) *Test and mode timers.* The analyzer shall be capable of simultaneously determining the amount of time elapsed in a test, and in a mode within that test.

(9) *Sample rate.* The analyzer shall be capable of measuring exhaust concentrations of gases specified in this section at a minimum rate of twice per second.

(c) *Demonstration of conformity.* The analyzer shall be demonstrated to the satisfaction of the inspection program manager, through acceptance testing procedures, to meet the requirements of this section and that it is capable of being maintained as required in appendix A to this subpart.

(II) Steady-State Test Dynamometer

(a) The chassis dynamometer for steady-state short tests shall provide the following capabilities:

(1) *Power absorption.* The dynamometer shall be capable of applying a load to the vehicle's driving tire surfaces at the horsepower and speed levels specified in paragraph (II)(b) of this appendix.

(2) *Short-term stability.* Power absorption at constant speed shall not drift more than ±0.5 horsepower (hp) during any single test mode.

(3) *Roll weight capacity.* The dynamometer shall be capable of supporting a driving axle weight up to four thousand (4,000) pounds or greater.

(4) *Between roll wheel lifts.* These shall be controllable and capable of lifting a minimum of four thousand (4,000) pounds.

(5) *Roll brakes.* Both rolls shall be locked when the wheel lift is up.

(6) *Speed indications.* The dynamometer speed display shall have a range of 0–60 mph, and a resolution and accuracy of at least 1 mph.

(7) *Safety interlock.* A roll speed sensor and safety interlock circuit shall be provided which prevents the application of the roll brakes and upward lift movement at any roll speed above 0.5 mph.

(b) The dynamometer shall produce the load speed relationships specified in paragraphs (III) and (V) of appendix B to this subpart.

(III) Transient Emission Test Equipment [Reserved]

(IV) Evaporative System Purge Test Equipment [Reserved]

(V) Evaporative System Integrity Test Equipment [Reserved]

[57 FR 52987, Nov. 5, 1992, as amended at 58 FR 59367, Nov. 9, 1993]

APPENDIX E TO SUBPART S—TRANSIENT TEST DRIVING CYCLE

(I) *Driver's trace.* All excursions in the transient driving cycle shall be evaluated by the procedures defined in §86.115–78(b)(1) and §86.115(c) of this chapter. Excursions exceeding these limits shall cause a test to be void. In addition, provisions shall be available to utilize cycle validation criteria, as described in §86.1341–90 of this chapter, for trace speed versus actual speed as a means to determine a valid test.

(II) *Driving cycle.* The following table shows the time speed relationship for the transient IM240 test procedure.

Second	MPH
0	0

Second	MPH	Second	MPH
1	0	75	29.9
2	0	76	30.2
3	0	77	30.7
4	0	78	31.2
5	3	79	31.8
6	5.9	80	32.2
7	8.6	81	32.4
8	11.5	82	32.2
9	14.3	83	31.7
10	16.9	84	28.6
11	17.3	85	25.1
12	18.1	86	21.6
13	20.7	87	18.1
14	21.7	88	14.6
15	22.4	89	11.1
16	22.5	90	7.6
17	22.1	91	4.1
18	21.5	92	0.6
19	20.9	93	0
20	20.4	94	0
21	19.8	95	0
22	17	96	0
23	14.9	97	0
24	14.9	98	3.3
25	15.2	99	6.6
26	15.5	100	9.9
27	16	101	13.2
28	17.1	102	16.5
29	19.1	103	19.8
30	21.1	104	22.2
31	22.7	105	24.3
32	22.9	106	25.8
33	22.7	107	26.4
34	22.6	108	25.7
35	21.3	109	25.1
36	19	110	24.7
37	17.1	111	25.2
38	15.8	112	25.4
39	15.8	113	27.2
40	17.7	114	26.5
41	19.8	115	24
42	21.6	116	22.7
43	23.2	117	19.4
44	24.2	118	17.7
45	24.6	119	17.2
46	24.9	120	18.1
47	25	121	18.6
48	25.7	122	20
49	26.1	123	20.7
50	26.7	124	21.7
51	27.5	125	22.4
52	28.6	126	22.5
53	29.3	127	22.1
54	29.8	128	21.5
55	30.1	129	20.9
56	30.4	130	20.4
57	30.7	131	19.8
58	30.7	132	17
59	30.5	133	17.1
60	30.4	134	15.8
61	30.3	135	15.8
62	30.4	136	17.7
63	30.8	137	19.8
64	30.4	138	21.6
65	29.9	139	22.2
66	29.5	140	24.5
67	29.8	141	24.7
68	30.3	142	24.8
69	30.7	143	24.7
70	30.9	144	24.6
71	31	145	24.6
72	30.9	146	25.1
73	30.4	147	25.6
74	29.8	148	25.7

Second	MPH
149	25.4
150	24.9
151	25
152	25.4
153	26
154	26
155	25.7
156	26.1
157	26.7
158	27.3
159	30.5
160	33.5
161	36.2
162	37.3
163	39.3
164	40.5
165	42.1
166	43.5
167	45.1
168	46
169	46.8
170	47.5
171	47.5
172	47.3
173	47.2
174	47.2
175	47.4
176	47.9
177	48.5
178	49.1
179	49.5
180	50
181	50.6
182	51
183	51.5
184	52.2
185	53.2
186	54.1
187	54.6
188	54.9
189	55
190	54.9
191	54.6
192	54.6
193	54.8
194	55.1
195	55.5
196	55.7
197	56.1
198	56.3
199	56.6
200	56.7
201	56.7
202	56.3
203	56
204	55
205	53.4
206	51.6
207	51.8
208	52.1
209	52.5
210	53
211	53.5
212	54
213	54.9
214	55.4
215	55.6
216	56
217	56
218	55.8
219	55.2
220	54.5
221	53.6
222	52.5
223	51.5
224	50.5
225	48
226	44.5
227	41
228	37.5
229	34
230	30.5
231	27
232	23.5
233	20
234	16.5
235	13
236	9.5
237	6
238	2.5
239	0

[57 FR 52987, Nov. 5, 1992, as amended at 58 FR 59367, Nov. 9, 1993]

Subpart T—Conformity to State or Federal Implementation Plans of Transportation Plans, Programs, and Projects Developed, Funded or Approved Under Title 23 U.S.C. or the Federal Transit Act

SOURCE: 58 FR 62216, Nov. 24, 1993, unless otherwise noted.

§ 51.390 Purpose.

The purpose of this subpart is to implement section 176(c) of the Clean Air Act (CAA), as amended (42 U.S.C. 7401 et seq.), and the related requirements of 23 U.S.C. 109(j), with respect to the conformity of transportation plans, programs, and projects which are developed, funded, or approved by the United States Department of Transportation (DOT), and by metropolitan planning organizations (MPOs) or other recipients of funds under title 23 U.S.C. or the Federal Transit Act (49 U.S.C. 1601 et seq.). This subpart sets forth policy, criteria, and procedures for demonstrating and assuring conformity of such activities to an applicable implementation plan developed pursuant to section 110 and Part D of the CAA.

§ 51.392 Definitions.

Terms used but not defined in this subpart shall have the meaning given them by the CAA, titles 23 and 49 U.S.C., other Environmental Protection Agency (EPA) regulations, or

other DOT regulations, in that order of priority.

Applicable implementation plan is defined in section 302(q) of the CAA and means the portion (or portions) of the implementation plan, or most recent revision thereof, which has been approved under section 110, or promulgated under section 110(c), or promulgated or approved pursuant to regulations promulgated under section 301(d) and which implements the relevant requirements of the CAA.

CAA means the Clean Air Act, as amended.

Cause or contribute to a new violation for a project means:

(1) To cause or contribute to a new violation of a standard in the area substantially affected by the project or over a region which would otherwise not be in violation of the standard during the future period in question, if the project were not implemented; or

(2) To contribute to a new violation in a manner that would increase the frequency or severity of a new violation of a standard in such area.

Control strategy implementation plan revision is the applicable implementation plan which contains specific strategies for controlling the emissions of and reducing ambient levels of pollutants in order to satisfy CAA requirements for demonstrations of reasonable further progress and attainment (CAA sections 182(b)(1), 182(c)(2)(A), 182(c)(2)(B), 187(a)(7), 189(a)(1)(B), and 189(b)(1)(A); and sections 192(a) and 192(b), for nitrogen dioxide).

Control strategy period with respect to particulate matter less than 10 microns in diameter (PM_{10}), carbon monoxide (CO), nitrogen dioxide (NO_2), and/or ozone precursors (volatile organic compounds and oxides of nitrogen), means that period of time after EPA approves control strategy implementation plan revisions containing strategies for controlling PM_{10}, NO_2, CO, and/or ozone, as appropriate. This period ends when a State submits and EPA approves a request under section 107(d) of the CAA for redesignation to an attainment area.

Design concept means the type of facility identified by the project, e.g., freeway, expressway, arterial highway, grade-separated highway, reserved right-of-way rail transit, mixed-traffic rail transit, exclusive busway, etc.

Design scope means the design aspects which will affect the proposed facility's impact on regional emissions, usually as they relate to vehicle or person carrying capacity and control, e.g., number of lanes or tracks to be constructed or added, length of project, signalization, access control including approximate number and location of interchanges, preferential treatment for high-occupancy vehicles, etc.

DOT means the United States Department of Transportation.

EPA means the Environmental Protection Agency.

FHWA means the Federal Highway Administration of DOT.

FHWA/FTA project, for the purpose of this subpart, is any highway or transit project which is proposed to receive funding assistance and approval through the Federal-Aid Highway program or the Federal mass transit program, or requires Federal Highway Administration (FHWA) or Federal Transit Administration (FTA) approval for some aspect of the project, such as connection to an interstate highway or deviation from applicable design standards on the interstate system.

FTA means the Federal Transit Administration of DOT.

Forecast period with respect to a transportation plan is the period covered by the transportation plan pursuant to 23 CFR part 450.

Highway project is an undertaking to implement or modify a highway facility or highway-related program. Such an undertaking consists of all required phases necessary for implementation. For analytical purposes, it must be defined sufficiently to:

(1) Connect logical termini and be of sufficient length to address environmental matters on a broad scope;

(2) Have independent utility or significance, i.e., be usable and be a reasonable expenditure even if no additional transportation improvements in the area are made; and

(3) Not restrict consideration of alternatives for other reasonably foreseeable transportation improvements.

Horizon year is a year for which the transportation plan describes the envisioned transportation system according to § 51.404.

Hot-spot analysis is an estimation of likely future localized CO and PM_{10} pollutant concentrations and a comparison of those concentrations to the national ambient air quality standards. Pollutant concentrations to be estimated should be based on the total emissions burden which may result from the implementation of a single, specific project, summed together with future background concentrations (which can be estimated using the ratio of future to current traffic multiplied by the ratio of future to current emission factors) expected in the area. The total concentration must be estimated and analyzed at appropriate receptor locations in the area substantially affected by the project. Hot-spot analysis assesses impacts on a scale smaller than the entire nonattainment or maintenance area, including, for example, congested roadway intersections and highways or transit terminals, and uses an air quality dispersion model to determine the effects of emissions on air quality.

Incomplete data area means any ozone nonattainment area which EPA has classified, in 40 CFR part 81, as an incomplete data area.

Increase the frequency or severity means to cause a location or region to exceed a standard more often or to cause a violation at a greater concentration than previously existed and/or would otherwise exist during the future period in question, if the project were not implemented.

ISTEA means the Intermodal Surface Transportation Efficiency Act of 1991.

Maintenance area means any geographic region of the United States previously designated nonattainment pursuant to the CAA Amendments of 1990 and subsequently redesignated to attainment subject to the requirement to develop a maintenance plan under section 175A of the CAA, as amended.

Maintenance period with respect to a pollutant or pollutant precursor means that period of time beginning when a State submits and EPA approves a request under section 107(d) of the CAA for redesignation to an attainment area, and lasting for 20 years, unless the applicable implementation plan specifies that the maintenance period shall last for more than 20 years.

Metropolitan planning organization (MPO) is that organization designated as being responsible, together with the State, for conducting the continuing, cooperative, and comprehensive planning process under 23 U.S.C. 134 and 49 U.S.C. 1607. It is the forum for cooperative transportation decision-making.

Milestone has the meaning given in section 182(g)(1) and section 189(c) of the CAA. A milestone consists of an emissions level and the date on which it is required to be achieved.

Motor vehicle emissions budget is that portion of the total allowable emissions defined in a revision to the applicable implementation plan (or in an implementation plan revision which was endorsed by the Governor or his or her designee, subject to a public hearing, and submitted to EPA, but not yet approved by EPA) for a certain date for the purpose of meeting reasonable further progress milestones or attainment or maintenance demonstrations, for any criteria pollutant or its precursors, allocated by the applicable implementation plan to highway and transit vehicles. The applicable implementation plan for an ozone nonattainment area may also designate a motor vehicle emissions budget for oxides of nitrogen (NO_x) for a reasonable further progress milestone year if the applicable implementation plan demonstrates that this NO_x budget will be achieved with measures in the implementation plan (as an implementation plan must do for VOC milestone requirements). The applicable implementation plan for an ozone nonattainment area includes a NOx budget if NOx reductions are being substituted for reductions in volatile organic compounds in milestone years required for reasonable further progress.

National ambient air quality standards (NAAQS) are those standards established pursuant to section 109 of the CAA.

NEPA means the National Environmental Policy Act of 1969, as amended (42 U.S.C. 4321 et seq). I11*NEPA process completion*, for the purposes of this subpart, with respect to FHWA or FTA, means the point at which there is a

specific action to make a determination that a project is categorically excluded, to make a Finding of No Significant Impact, or to issue a record of decision on a Final Environmental Impact Statement under NEPA.

Nonattainment area means any geographic region of the United States which has been designated as nonattainment under § 107 of the CAA for any pollutant for which a national ambient air quality standard exists.

Not classified area means any carbon monoxide nonattainment area which EPA has not classified as either moderate or serious.

Phase II of the interim period with respect to a pollutant or pollutant precursor means that period of time after the effective date of this rule, lasting until the earlier of the following:

(1) Submission to EPA of the relevant control strategy implementation plan revisions which have been endorsed by the Governor (or his or her designee) and have been subject to a public hearing, or

(2) The date that the Clean Air Act requires relevant control strategy +-o be submitted to EPA, provided EPA has notified the State, MPO, and DOT of the State's failure to submit any such plans. The precise end of Phase II of the interim period is defined in § 51.448.

Project means a highway project or transit project.

Protective finding means a determination by EPA that the control strategy contained in a submitted control strategy implementation plan revision would have been considered approvable with respect to requirements for emissions reductions if all committed measures had been submitted in enforceable form as required by Clean Air Act section 110(a)(2)(A).

Recipient of funds designated under title 23 U.S.C. or the Federal Transit Act means any agency at any level of State, county, city, or regional government that routinely receives title 23 U.S.C. or Federal Transit Act funds to construct FHWA/FTA projects, operate FHWA/FTA projects or equipment, purchase equipment, or undertake other services or operations via contracts or agreements. This definition does not include private landowners or developers, or contractors or entities that are only paid for services or products created by their own employees.

Regionally significant project means a transportation project (other than an exempt project) that is on a facility which serves regional transportation needs (such as access to and from the area outside of the region, major activity centers in the region, major planned developments such as new retail malls, sports complexes, etc., or transportation terminals as well as most terminals themselves) and would normally be included in the modeling of a metropolitan area's transportation network, including at a minimum all principal arterial highways and all fixed guideway transit facilities that offer an alternative to regional highway travel.

Rural transport ozone nonattainment area means an ozone nonattainment area that does not include, and is not adjacent to, any part of a Metropolitan Statistical Area or, where one exists, a Consolidated Metropolitan Statistical Area (as defined by the United States Bureau of the Census) and is classified under Clean Air Act section 182(h) as a rural transport area.

Standard means a national ambient air quality standard.

Submarginal area means any ozone nonattainment area which EPA has classified as submarginal in 40 CFR part 81.

Transit is mass transportation by bus, rail, or other conveyance which provides general or special service to the public on a regular and continuing basis. It does not include school buses or charter or sightseeing services.

Transit project is an undertaking to implement or modify a transit facility or transit-related program; purchase transit vehicles or equipment; or provide financial assistance for transit operations. It does not include actions that are solely within the jurisdiction of local transit agencies, such as changes in routes, schedules, or fares. It may consist of several phases. For analytical purposes, it must be defined inclusively enough to:

(1) Connect logical termini and be of sufficient length to address environmental matters on a broad scope;

(2) Have independent utility or independent significance, i.e., be a reasonable expenditure even if no additional transportation improvements in the area are made; and I11(3) Not restrict consideration of alternatives for other reasonably foreseeable transportation improvements.

Transitional area means any ozone nonattainment area which EPA has classified as transitional in 40 CFR part 81.

Transitional period with respect to a pollutant or pollutant precursor means that period of time which begins after submission to EPA of the relevant control strategy implementation plan which has been endorsed by the Governor (or his or her designee) and has been subject to a public hearing. The transitional period lasts until EPA takes final approval or disapproval action on the control strategy implementation plan submission or finds it to be incomplete. The precise beginning and end of the transitional period is defined in § 51.448.

Transportation control measure (TCM) is any measure that is specifically identified and committed to in the applicable implementation plan that is either one of the types listed in § 108 of the CAA, or any other measure for the purpose of reducing emissions or concentrations of air pollutants from transportation sources by reducing vehicle use or changing traffic flow or congestion conditions. Notwithstanding the above, vehicle technology-based, fuel-based, and maintenance-based measures which control the emissions from vehicles under fixed traffic conditions are not TCMs for the purposes of this subpart.

Transportation improvement program (TIP) means a staged, multiyear, intermodal program of transportation projects covering a metropolitan planning area which is consistent with the metropolitan transportation plan, and developed pursuant to 23 CFR part 450. I11*Transportation plan* means the official intermodal metropolitan transportation plan that is developed through the metropolitan planning process for the metropolitan planning area, developed pursuant to 23 CFR part 450.

Transportation project is a highway project or a transit project.

[58 FR 62216, Nov. 24, 1993, as amended at 60 FR 57184, Nov. 14, 1995]

§ 51.394 Applicability.

(a) *Action applicability*. (1) Except as provided for in paragraph (c) of this section or § 51.460, conformity determinations are required for:

(i) The adoption, acceptance, approval or support of transportation plans developed pursuant to 23 CFR part 450 or 49 CFR part 613 by an MPO or DOT;

(ii) The adoption, acceptance, approval or support of TIPs developed pursuant to 23 CFR part 450 or 49 CFR part 613 by an MPO or DOT; and

(iii) The approval, funding, or implementation of FHWA/FTA projects.

(2) Conformity determinations are not required under this rule for individual projects which are not FHWA/FTA projects. However, § 51.450 applies to such projects if they are regionally significant.

(b) *Geographic applicability*. (1) The provisions of this subpart shall apply in all nonattainment and maintenance areas for transportation-related criteria pollutants for which the area is designated nonattainment or has a maintenance plan.

(2) The provisions of this subpart apply with respect to emissions of the following criteria pollutants: ozone, carbon monoxide, nitrogen dioxide, and particles with an aerodynamic diameter less than or equal to a nominal 10 micrometers (PM_{10}).

(3) The provisions of this subpart apply with respect to emissions of the following precursor pollutants:

(i) Volatile organic compounds and nitrogen oxides in ozone areas;

(ii) Nitrogen oxides in nitrogen dioxide areas; and

(iii) Volatile organic compounds, nitrogen oxides, and PM_{10} in PM_{10} areas if:

(A) During the interim period, the EPA Regional Administrator or the director of the State air agency has made a finding that transportation-related precursor emissions within the nonattainment area are a significant contributor to the PM_{10} nonattainment

problem and has so notified the MPO and DOT; or

(B) During the transitional, control strategy, and maintenance periods, the applicable implementation plan (or implementation plan submission) establishes a budget for such emissions as part of the reasonable further progress, attainment or maintenance strategy.

(c) *Limitations.* (1) Projects subject to this regulation for which the NEPA process and a conformity determination have been completed by FHWA or FTA may proceed toward implementation without further conformity determinations if one of the following major steps has occurred within the past three years: NEPA process completion; start of final design; acquisition of a significant portion of the right-of-way; or approval of the plans, specifications and estimates. All phases of such projects which were considered in the conformity determination are also included, if those phases were for the purpose of funding, final design, right-of-way acquisition, construction, or any combination of these phases.

(2) A new conformity determination for the project will be required if there is a significant change in project design concept and scope, if a supplemental environmental document for air quality purposes is initiated, or if no major steps to advance the project have occurred within the past three years.

(d) *Grace period for new nonattainment areas.* For areas or portions of areas which have been in attainment for either ozone, CO, PM–10, or NO_2 since 1990 and are subsequently redesignated to nonattainment for any of these pollutants, the provisions of this subpart shall not apply for such pollutant for 12 months following the date of final designation to nonattainment.

[58 FR 62216, Nov. 24, 1993, as amended at 60 FR 57184, Nov. 14, 1995]

§ 51.396 Implementation plan revision.

(a) States with areas subject to this rule must submit to the EPA and DOT a revision to their implementation plan which contains criteria and procedures for DOT, MPOs and other State or local agencies to assess the conformity of transportation plans, programs, and projects, consistent with these regulations. This revision is to be submitted by November 25, 1994 (or within 12 months of an area's redesignation from attainment to nonattainment, if the State has not previously submitted such a revision). Further revisions to the implementation plan required by amendments to this subpart must be submitted within 12 months of the date of publication of such final amendments to this subpart. EPA will provide DOT with a 30-day comment period before taking action to approve or disapprove the submission. A State's conformity provisions may contain criteria and procedures more stringent than the requirements described in these regulations only if the State's conformity provisions apply equally to non-federal as well as Federal entities.

(b) The Federal conformity rules under this subpart and 40 CFR part 93, in addition to any existing applicable State requirements, establish the conformity criteria and procedures necessary to meet the requirements of Clean Air Act section 176(c) until such time as the required conformity implementation plan revision is approved by EPA. Following EPA approval of the State conformity provisions (or a portion thereof) in a revision to the applicable implementation plan, the approved (or approved portion of the) State criteria and procedures would govern conformity determinations and the Federal conformity regulations contained in 40 CFR part 93 would apply only for the portion, if any, of the State's conformity provisions that is not approved by EPA. In addition, any previously applicable implementation plan requirements relating to conformity remain enforceable until the State revises its applicable implementation plan to specifically remove them and that revision is approved by EPA.

(c) To be approvable by EPA, the implementation plan revision submitted to EPA and DOT under this section shall address all requirements of this subpart in a manner which gives them full legal effect. In particular, the revision shall incorporate the provisions of the following sections of this subpart in verbatim form, except insofar as needed to give effect to a stated intent in the revision to establish criteria and

procedures more stringent than the requirements stated in these sections: §§ 51.392, 51.394, 51.398, 51.400, 51.404, 51.410, 51.412, 51.414, 51.416, 51.418, 51.420, 51.422, 51.424, 51.426, 51.428, 51.430, 51.432, 51.434, 51.436, 51.438, 51.440, 51.442, 51.444, 51.446, 51.448, 51.450, 51.460, and 51.462.

[58 FR 62216, Nov. 24, 1993, as amended at 60 FR 57185, Nov. 14, 1995]

§ 51.398 Priority.

When assisting or approving any action with air quality-related consequences, FHWA and FTA shall give priority to the implementation of those transportation portions of an applicable implementation plan prepared to attain and maintain the NAAQS. This priority shall be consistent with statutory requirements for allocation of funds among States or other jurisdictions.

§ 51.400 Frequency of conformity determinations.

(a) Conformity determinations and conformity redeterminations for transportation plans, TIPs, and FHWA/FTA projects must be made according to the requirements of this section and the applicable implementation plan.

(b) *Transportation plans.* (1) Each new transportation plan must be found to conform before the transportation plan is approved by the MPO or accepted by DOT.

(2) All transportation plan revisions must be found to conform before the transportation plan revisions are approved by MPO or accepted by DOT, unless the revision merely adds or deletes exempt projects listed in § 51.460. The conformity determination must be based on the transportation plan and the revision taken as a whole.

(3) Conformity of existing transportation plans must be redetermined within 18 months of the following, or the existing conformity determination will lapse:

(i) November 24, 1993;

(ii) EPA approval of an implementation plan revision which:

(A) Establishes or revises a transportation-related emissions budget (as required by CAA sections 175A(a), 182(b)(1), 182(c)(2)(A), 182(c)(2)(B), 187(a)(7), 189(a)(1)(B), and 189(b)(1)(A); and sections 192(a) and 192(b), for nitrogen dioxide); or

(B) Adds, deletes, or changes TCMs; and

(iii) EPA promulgation of an implementation plan which establishes or revises a transportation-related emissions budget or adds, deletes, or changes TCMs.

(4) In any case, conformity determinations must be made no less frequently than every three years, or the existing conformity determination will lapse.

(c) *Transportation improvement programs.* (1) A new TIP must be found to conform before the TIP is approved by the MPO or accepted by DOT.

(2) A TIP amendment requires a new conformity determination for the entire TIP before the amendment is approved by the MPO or accepted by DOT, unless the amendment merely adds or deletes exempt projects listed in § 51.460.

(3) After an MPO adopts a new or revised transportation plan, conformity must be redetermined by the MPO and DOT within six months from the date of adoption of the plan, unless the new or revised plan merely adds or deletes exempt projects listed in § 51.460. Otherwise, the existing conformity determination for the TIP will lapse.

(4) In any case, conformity determinations must be made no less frequently than every three years or the existing conformity determination will lapse.

(d) *Projects.* FHWA/FTA projects must be found to conform before they are adopted, accepted, approved, or funded. Conformity must be redetermined for any FHWA/FTA project if none of the following major steps has occurred within the past three years: NEPA process completion; start of final design; acquisition of a significant portion of the right-of-way; or approval of the plans, specifications and estimates.

§ 51.402 Consultation.

(a) *General.* The implementation plan revision required under § 51.396 shall include procedures for interagency consultation (Federal, State, and local) and resolution of conflicts.

(1) The implementation plan revision shall include procedures to be undertaken by MPOs, State departments of transportation, and DOT with State and local air quality agencies and EPA before making conformity determinations, and by State and local air agencies and EPA with MPOs, State departments of transportation, and DOT in developing applicable implementation plans.

(2) Before the implementation plan revision is approved by EPA, MPOs and State departments of transportation before making conformity determinations must provide reasonable opportunity for consultation with State air agencies, local air quality and transportation agencies, DOT, and EPA, including consultation on the issues described in paragraph (c)(1) of this section.

(b) *Interagency consultation procedures: General factors.* (1) States shall provide in the implementation plan well-defined consultation procedures whereby representatives of the MPOs, State and local air quality planning agencies, State and local transportation agencies, and other organizations with responsibilities for developing, submitting, or implementing provisions of an implementation plan required by the CAA must consult with each other and with local or regional offices of EPA, FHWA, and FTA on the development of the implementation plan, the transportation plan, the TIP, and associated conformity determinations.

(2) Interagency consultation procedures shall include at a minimum the general factors listed below and the specific processes in paragraph (c) of this section:

(i) The roles and responsibilities assigned to each agency at each stage in the implementation plan development process and the transportation planning process, including technical meetings;

(ii) The organizational level of regular consultation;

(iii) A process for circulating (or providing ready access to) draft documents and supporting materials for comment before formal adoption or publication;

(iv) The frequency of, or process for convening, consultation meetings and responsibilities for establishing meeting agendas;

(v) A process for responding to the significant comments of involved agencies; and

(vi) A process for the development of a list of the TCMs which are in the applicable implementation plan.

(c) *Interagency consultation procedures: Specific processes.* Interagency consultation procedures shall also include the following specific processes:

(1) A process involving the MPO, State and local air quality planning agencies, State and local transportation agencies, EPA, and DOT for the following:

(i) Evaluating and choosing a model (or models) and associated methods and assumptions to be used in hot-spot analyses and regional emissions analyses;

(ii) Determining which minor arterials and other transportation projects should be considered ''regionally significant'' for the purposes of regional emissions analysis (in addition to those functionally classified as principal arterial or higher or fixed guideway systems or extensions that offer an alternative to regional highway travel), and which projects should be considered to have a significant change in design concept and scope from the transportation plan or TIP;

(iii) Evaluating whether projects otherwise exempted from meeting the requirements of this subpart (see §§ 51.460 and 51.462) should be treated as non-exempt in cases where potential adverse emissions impacts may exist for any reason;

(iv) Making a determination, as required by § 51.418(c)(1), whether past obstacles to implementation of TCMs which are behind the schedule established in the applicable implementation plan have been identified and are being overcome, and whether State and local agencies with influence over approvals or funding for TCMs are giving maximum priority to approval or funding for TCMs. This process shall also consider whether delays in TCM implementation necessitate revisions to the

applicable implementation plan to remove TCMs or substitute TCMs or other emission reduction measures;

(v) Identifying, as required by § 51.454(d), projects located at sites in PM_{10} nonattainment areas which have vehicle and roadway emission and dispersion characteristics which are essentially identical to those at sites which have violations verified by monitoring, and therefore require quantitative PM_{10} hot-spot analysis; and

(vi) Notification of transportation plan or TIP revisions or amendments which merely add or delete exempt projects listed in § 51.460.

(2) A process involving the MPO and State and local air quality planning agencies and transportation agencies for the following:

(i) Evaluating events which will trigger new conformity determinations in addition to those triggering events established in § 51.400; and

(ii) Consulting on emissions analysis for transportation activities which cross the borders of MPOs or nonattainment areas or air basins.

(3) Where the metropolitan planning area does not include the entire nonattainment or maintenance area, a process involving the MPO and the State department of transportation for cooperative planning and analysis for purposes of determining conformity of all projects outside the metropolitan area and within the nonattainment or maintenance area.

(4) A process to ensure that plans for construction of regionally significant projects which are not FHWA/FTA projects (including projects for which alternative locations, design concept and scope, or the no-build option are still being considered), including those by recipients of funds designated under title 23 U.S.C. or the Federal Transit Act, are disclosed to the MPO on a regular basis, and to ensure that any changes to those plans are immediately disclosed;

(5) A process involving the MPO and other recipients of funds designated under title 23 U.S.C. or the Federal Transit Act for assuming the location and design concept and scope of projects which are disclosed to the MPO as required by paragraph (c)(4) of this section but whose sponsors have not yet decided these features, in sufficient detail to perform the regional emissions analysis according to the requirements of § 51.452.

(6) A process for consulting on the design, schedule, and funding of research and data collection efforts and regional transportation model development by the MPO (e.g., household/travel transportation surveys).

(7) A process (including Federal agencies) for providing final documents (including applicable implementation plans and implementation plan revisions) and supporting information to each agency after approval or adoption.

(d) *Resolving conflicts.* Conflicts among State agencies or between State agencies and an MPO shall be escalated to the Governor if they cannot be resolved by the heads of the involved agencies. The State air agency has 14 calendar days to appeal to the Governor after the State DOT or MPO has notified the State air agency head of the resolution of his or her comments. The implementation plan revision required by § 51.396 shall define the procedures for starting of the 14-day clock. If the State air agency appeals to the Governor, the final conformity determination must have the concurrence of the Governor. If the State air agency does not appeal to the Governor within 14 days, the MPO or State department of transportation may proceed with the final conformity determination. The Governor may delegate his or her role in this process, but not to the head or staff of the State or local air agency, State department of transportation, State transportation commission or board, or an MPO.

(e) *Public consultation procedures.* Affected agencies making conformity determinations on transportation plans, programs, and projects shall establish a proactive public involvement process which provides opportunity for public review and comment prior to taking formal action on a conformity determination for all transportation plans and TIPs, consistent with the requirements of 23 CFR part 450. In addition, these agencies must specifically address in writing all public comments that known plans for a regionally significant project which is not receiving FHWA or FTA funding or approval

have not been properly reflected in the emissions analysis supporting a proposed conformity finding for a transportation plan or TIP. These agencies shall also provide opportunity for public involvement in conformity determinations for projects where otherwise required by law.

§51.404 Content of transportation plans.

(a) *Transportation plans adopted after January 1, 1995 in serious, severe, or extreme ozone nonattainment areas and in serious carbon monoxide nonattainment areas.* The transportation plan must specifically describe the transportation system envisioned for certain future years which shall be called horizon years.

(1) The agency or organization developing the transportation plan may choose any years to be horizon years, subject to the following restrictions:

(i) Horizon years may be no more than 10 years apart.

(ii) The first horizon year may be no more than 10 years from the base year used to validate the transportation demand planning model.

(iii) If the attainment year is in the time span of the transportation plan, the attainment year must be a horizon year.

(iv) The last horizon year must be the last year of the transportation plan's forecast period.

(2) For these horizon years:

(i) The transportation plan shall quantify and document the demographic and employment factors influencing expected transportation demand, including land use forecasts, in accordance with implementation plan provisions and §51.402;

(ii) The highway and transit system shall be described in terms of the regionally significant additions or modifications to the existing transportation network which the transportation plan envisions to be operational in the horizon years. Additions and modifications to the highway network shall be sufficiently identified to indicate intersections with existing regionally significant facilities, and to determine their effect on route options between transportation analysis zones. Each added or modified highway segment shall also be sufficiently identified in terms of its design concept and design scope to allow modeling of travel times under various traffic volumes, consistent with the modeling methods for area-wide transportation analysis in use by the MPO. Transit facilities, equipment, and services envisioned for the future shall be identified in terms of design concept, design scope, and operating policies sufficiently to allow modeling of their transit ridership. The description of additions and modifications to the transportation network shall also be sufficiently specific to show that there is a reasonable relationship between expected land use and the envisioned transportation system; and

(iii) Other future transportation policies, requirements, services, and activities, including intermodal activities, shall be described.

(b) *Moderate areas reclassified to serious.* Ozone or CO nonattainment areas which are reclassified from moderate to serious must meet the requirements of paragraph (a) of this section within two years from the date of reclassification.

(c) *Transportation plans for other areas.* Transportation plans for other areas must meet the requirements of paragraph (a) of this section at least to the extent it has been the previous practice of the MPO to prepare plans which meet those requirements. Otherwise, transportation plans must describe the transportation system envisioned for the future specifically enough to allow determination of conformity according to the criteria and procedures of §§51.410 through 51.446.

(d) *Savings.* The requirements of this section supplement other requirements of applicable law or regulation governing the format or content of transportation plans.

§51.406 Relationship of transportation plan and TIP conformity with the NEPA process.

The degree of specificity required in the transportation plan and the specific travel network assumed for air quality modeling do not preclude the consideration of alternatives in the NEPA process or other project development studies. Should the NEPA process result in a project with design concept

and scope significantly different from that in the transportation plan or TIP, the project must meet the criteria in §§ 51.410 through 51.446 for projects not from a TIP before NEPA process completion.

§ 51.408 Fiscal constraints for transportation plans and TIPs.

Transportation plans and TIPs must be fiscally constrained consistent with DOT's metropolitan planning regulations at 23 CFR part 450 in order to be found in conformity.

§ 51.410 Criteria and procedures for determining conformity of transportation plans, programs, and projects: General.

(a) In order to be found to conform, each transportation plan, program, and FHWA/FTA project must satisfy the applicable criteria and procedures in §§ 51.412 through 51.446 as listed in Table 1 in paragraph (b) of this section, and must comply with all applicable conformity requirements of implementation plans and of court orders for the area which pertain specifically to conformity determination requirements. The criteria for making conformity determinations differ based on the action under review (transportation plans, TIPs, and FHWA/FTA projects), the time period in which the conformity determination is made, and the relevant pollutant.

(b) The following table indicates the criteria and procedures in §§ 51.412 through 51.446 which apply for each action in each time period.

TABLE 1.—CONFORMITY CRITERIA

Action	Criteria
All Periods	
Transportation Plan	§§ 51.412, 51.414, 51.416, 51.418(b).
TIP	§§ 51.412, 51.414, 51.416, 51.418(c).
Project (From a conforming plan and TIP).	§§ 51.412, 51.414, 51.416, 51.420, 51.422, 51.424, 51.426.
Project (Not from a conforming plan and TIP).	§§ 51.412, 51.414, 51.416, 51.418(d), 51.420, 51.424, 51.426.
Phase II of the Interim Period	
Transportation Plan	§§ 51.436, 51.442.
TIP	§§ 51.438, 51.444.
Project (From a conforming plan and TIP).	§ 51.434.
Project (Not from a conforming plan and TIP).	§ 51.434, 51.440, 51.446.
Transitional Period	
Transportation Plan	§§ 51.428, 51.436, 51.442.
TIP	§ 51.430, 51.438, 51.444.
Project (From a conforming plan and TIP).	§ 51.434.
Project (Not from a conforming plan and TIP).	§§ 51.432, 51.434, 51.440, 51.446.
Control Strategy and Maintenance Periods	
Transportation Plan	§ 51.428.
TIP	§ 51.430.
Project (From a conforming plan and TIP).	No additional criteria.
Project (Not from a conforming plan and TIP).	§ 51.432.

51.412 The conformity determination must be based on the latest planning assumptions.

51.414 The conformity determination must be based on the latest emission estimation model available.

51.416 The MPO must make the conformity determination according to the consultation procedures of this rule and the implementation plan revision required by § 51.396.

51.418 The transportation plan, TIP, or FHWA/FTA project which is not from a conforming plan and TIP must provide for the timely implementation of TCMs from the applicable implementation plan.

51.420 There must be a currently conforming transportation plan and currently conforming TIP at the time of project approval.

51.422 The project must come from a conforming transportation plan and program.

51.424 The FHWA/FTA project must not cause or contribute to any new localized CO or PM_{10} violations or increase the frequency or severity of any existing CO or PM_{10} violations in CO and PM_{10} nonattainment and maintenance areas.

51.426 The FHWA/FTA project must comply with PM_{10} control measures in the applicable implementation plan.

51.428 The transportation plan must be consistent with the motor vehicle emissions budget(s) in the applicable implementation plan or implementation plan submission.

51.430 The TIP must be consistent with the motor vehicle emissions budget(s) in the applicable implementation plan or implementation plan submission.
51.432 The project which is not from a conforming transportation plan and conforming TIP must be consistent with the motor vehicle emissions budget(s) in the applicable implementation plan or implementation plan submission.
51.434 The FHWA/FTA project must eliminate or reduce the severity and number of localized CO violations in the area substantially affected by the project (in CO nonattainment areas).
51.436 The transportation plan must contribute to emissions reductions in ozone and CO nonattainment areas.
51.438 The TIP must contribute to emissions reductions in ozone and CO nonattainment areas.
51.440 The project which is not from a conforming transportation plan and TIP must contribute to emissions reductions in ozone and CO nonattainment areas.
51.442 The transportation plan must contribute to emission reductions or must not increase emissions in PM_{10} and NO_2 nonattainment areas.
51.444 The TIP must contribute to emission reductions or must not increase emissions in PM_{10} and NO_2 nonattainment areas.
51.446 The project which is not from a conforming transportation plan and TIP must contribute to emission reductions or must not increase emissions in PM_{10} and NO_2 nonattainment areas.

§51.412 Criteria and procedures: Latest planning assumptions.

(a) The conformity determination, with respect to all other applicable criteria in §§51.414 through 51.446, must be based upon the most recent planning assumptions in force at the time of the conformity determination. This criterion applies during all periods. The conformity determination must satisfy the requirements of paragraphs (b) through (f) of this section.

(b) Assumptions must be derived from the estimates of current and future population, employment, travel, and congestion most recently developed by the MPO or other agency authorized to make such estimates and approved by the MPO. The conformity determination must also be based on the latest assumptions about current and future background concentrations.

(c) The conformity determination for each transportation plan and TIP must discuss how transit operating policies (including fares and service levels) and assumed transit ridership have changed since the previous conformity determination.

(d) The conformity determination must include reasonable assumptions about transit service and increases in transit fares and road and bridge tolls over time.

(e) The conformity determination must use the latest existing information regarding the effectiveness of the TCMs which have already been implemented.

(f) Key assumptions shall be specified and included in the draft documents and supporting materials used for the interagency and public consultation required by §51.402.

§51.414 Criteria and procedures: Latest emissions model.

(a) The conformity determination must be based on the latest emission estimation model available. This criterion applies during all periods. It is satisfied if the most current version of the motor vehicle emissions model specified by EPA for use in the preparation or revision of implementation plans in that State or area is used for the conformity analysis. Where EMFAC is the motor vehicle emissions model used in preparing or revising the applicable implementation plan, new versions must be approved by EPA before they are used in the conformity analysis.

(b) EPA will consult with DOT to establish a grace period following the specification of any new model.

(1) The grace period will be no less than three months and no more than 24 months after notice of availability is published in the FEDERAL REGISTER.

(2) The length of the grace period will depend on the degree of change in the model and the scope of re-planning likely to be necessary by MPOs in order to assure conformity. If the grace period will be longer than three months, EPA will announce the appropriate grace period in the FEDERAL REGISTER.

(c) Conformity analyses for which the emissions analysis was begun during the grace period or before the FEDERAL REGISTER notice of availability of the

latest emission model may continue to use the previous version of the model for transportation plans and TIPs. The previous model may also be used for projects if the analysis was begun during the grace period or before the FEDERAL REGISTER notice of availability, provided no more than three years have passed since the draft environmental document was issued.

§ 51.416 Criteria and procedures: Consultation.

The MPO must make the conformity determination according to the consultation procedures in this rule and in the implementation plan revision required by § 51.396, and according to the public involvement procedures established by the MPO in compliance with 23 CFR part 450. This criterion applies during all periods. Until the implementation plan revision required by § 51.396 is approved by EPA, the conformity determination must be made according to the procedures in §§ 51.402(a)(2) and 51.402(e). Once the implementation plan revision has been approved by EPA, this criterion is satisfied if the conformity determination is made consistent with the implementation plan's consultation requirements.

§ 51.418 Criteria and procedures: Timely implementation of TCMs.

(a) The transportation plan, TIP, or FHWA/FTA project which is not from a conforming plan and TIP must provide for the timely implementation of TCMs from the applicable implementation plan. This criterion applies during all periods.

(b) For transportation plans, this criterion is satisfied if the following two conditions are met:

(1) The transportation plan, in describing the envisioned future transportation system, provides for the timely completion or implementation of all TCMs in the applicable implementation plan which are eligible for funding under title 23 U.S.C. or the Federal Transit Act, consistent with schedules included in the applicable implementation plan.

(2) Nothing in the transportation plan interferes with the implementation of any TCM in the applicable implementation plan.

(c) For TIPs, this criterion is satisfied if the following conditions are met:

(1) An examination of the specific steps and funding source(s) needed to fully implement each TCM indicates that TCMs which are eligible for funding under title 23 U.S.C. or the Federal Transit Act are on or ahead of the schedule established in the applicable implementation plan, or, if such TCMs are behind the schedule established in the applicable implementation plan, the MPO and DOT have determined that past obstacles to implementation of the TCMs have been identified and have been or are being overcome, and that all State and local agencies with influence over approvals or funding for TCMs are giving maximum priority to approval or funding of TCMs over other projects within their control, including projects in locations outside the nonattainment or maintenance area.

(2) If TCMs in the applicable implementation plan have previously been programmed for Federal funding but the funds have not been obligated and the TCMs are behind the schedule in the implementation plan, then the TIP cannot be found to conform if the funds intended for those TCMs are reallocated to projects in the TIP other than TCMs, or if there are no other TCMs in the TIP, if the funds are reallocated to projects in the TIP other than projects which are eligible for Federal funding under ISTEA's Congestion Mitigation and Air Quality Improvement Program.

(3) Nothing in the TIP may interfere with the implementation of any TCM in the applicable implementation plan.

(d) For FHWA/FTA projects which are not from a conforming transportation plan and TIP, this criterion is satisfied if the project does not interfere with the implementation of any TCM in the applicable implementation plan.

§ 51.420 Criteria and procedures: Currently conforming transportation plan and TIP.

There must be a currently conforming transportation plan and currently conforming TIP at the time of project approval. This criterion applies during all periods. It is satisfied if the current

transportation plan and TIP have been found to conform to the applicable implementation plan by the MPO and DOT according to the procedures of this subpart.

(a) Only one conforming transportation plan or TIP may exist in an area at any time; conformity determinations of a previous transportation plan or TIP expire once the current plan or TIP is found to conform by DOT. The conformity determination on a transportation plan or TIP will also lapse if conformity is not determined according to the frequency requirements of §51.400.

(b) This criterion is not required to be satisfied at the time of project approval for a TCM specifically included in the applicable implementation plan, provided that all other relevant criteria of this subpart are satisfied.

[60 FR 57185, Nov. 14, 1995]

§51.422 Criteria and procedures: Projects from a plan and TIP.

(a) The project must come from a conforming plan and program. This criterion applies during all periods. If this criterion is not satisfied, the project must satisfy all criteria in Table 1 for a project not from a conforming transportation plan and TIP. A project is considered to be from a conforming transportation plan if it meets the requirements of paragraph (b) of this section and from a conforming program if it meets the requirements of paragraph (c) of this section. Special provisions for TCMs in an applicable implementation plan are provided in paragraph (d) of this section.

(b) A project is considered to be from a conforming transportation plan if one of the following conditions applies:

(1) For projects which are required to be identified in the transportation plan in order to satisfy §51.404, the project is specifically included in the conforming transportation plan and the project's design concept and scope have not changed significantly from those which were described in the transportation plan, or in a manner which would significantly impact use of the facility; or

(2) For projects which are not required to be specifically identified in the transportation plan, the project is identified in the conforming transportation plan, or is consistent with the policies and purpose of the transportation plan and will not interfere with other projects specifically included in the transportation plan.

(c) A project is considered to be from a conforming program if the following conditions are met:

(1) The project is included in the conforming TIP and the design concept and scope of the project were adequate at the time of the TIP conformity determination to determine its contribution to the TIP's regional emissions and have not changed significantly from those which were described in the TIP, or in a manner which would significantly impact use of the facility; and

(2) If the TIP describes a project design concept and scope which includes project-level emissions mitigation or control measures, written commitments to implement such measures must be obtained from the project sponsor and/or operator as required by §51.458(a) in order for the project to be considered from a conforming program. Any change in these mitigation or control measures that would significantly reduce their effectiveness constitutes a change in the design concept and scope of the project.

(d) *TCMs.* This criterion is not required to be satisfied for TCMs specifically included in an applicable implementation plan.

[58 FR 62216, Nov. 24, 1993, as amended at 60 FR 57185, Nov. 14, 1995]

§51.424 Criteria and procedures: Localized CO and PM_{10} violations (hot spots).

(a) The FHWA/FTA project must not cause or contribute to any new localized CO or PM_{10} violations or increase the frequency or severity of any existing CO or PM_{10} violations in CO and PM_{10} nonattainment and maintenance areas. This criterion applies during all periods. This criterion is satisfied if it is demonstrated that no new local violations will be created and the severity or number of existing violations will not be increased as a result of the project.

(b) The demonstration must be performed according to the requirements of §§ 51.402(c)(1)(i) and 51.454.

(c) For projects which are not of the type identified by § 51.454(a) or § 51.454(d), this criterion may be satisfied if consideration of local factors clearly demonstrates that no local violations presently exist and no new local violations will be created as a result of the project. Otherwise, in CO nonattainment and maintenance areas, a quantitative demonstration must be performed according to the requirements of § 51.454(b).

§ 51.426 Criteria and procedures: Compliance with PM_{10} control measures.

The FHWA/FTA project must comply with PM_{10} control measures in the applicable implementation plan. This criterion applies during all periods. It is satisfied if control measures (for the purpose of limiting PM_{10} emissions from the construction activities and/or normal use and operation associated with the project) contained in the applicable implementation plan are included in the final plans, specifications, and estimates for the project.

§ 51.428 Criteria and procedures: Motor vehicle emissions budget (transportation plan).

(a) The transportation plan must be consistent with the motor vehicle emissions budget(s) in the applicable implementation plan (or implementation plan submission). This criterion applies during the transitional period and the control strategy and maintenance periods, except as provided in § 51.464. This criterion may be satisfied if the requirements in paragraphs (b) and (c) of this section are met.

(b) A regional emissions analysis shall be performed as follows:

(1) The regional analysis shall estimate emissions of any of the following pollutants and pollutant precursors for which the area is in nonattainment or maintenance and for which the applicable implementation plan (or implementation plan submission) establishes an emissions budget:

(i) VOC as an ozone precursor;

(ii) NO_x as an ozone precursor;

(iii) CO;

(iv) PM_{10} (and its precursors VOC and/or NO_x if the applicable implementation plan or implementation plan submission identifies transportation-related precursor emissions within the nonattainment area as a significant contributor to the PM_{10} nonattainment problem or establishes a budget for such emissions); or

(v) NO_x (in NO_2 nonattainment or maintenance areas);

(2) The regional emissions analysis shall estimate emissions from the entire transportation system, including all regionally significant projects contained in the transportation plan and all other regionally significant highway and transit projects expected in the nonattainment or maintenance area in the timeframe of the transportation plan;

(3) The emissions analysis methodology shall meet the requirements of § 51.452;

(4) For areas with a transportation plan that meets the content requirements of § 51.404(a), the emissions analysis shall be performed for each horizon year. Emissions in milestone years which are between the horizon years may be determined by interpolation; and

(5) For areas with a transportation plan that does not meet the content requirements of § 51.404(a), the emissions analysis shall be performed for any years in the time span of the transportation plan provided they are not more than ten years apart and provided the analysis is performed for the last year of the plan's forecast period. If the attainment year is in the time span of the transportation plan, the emissions analysis must also be performed for the attainment year. Emissions in milestone years which are between these analysis years may be determined by interpolation.

(c) The regional emissions analysis shall demonstrate that for each of the applicable pollutants or pollutant precursors in paragraph (b)(1) of this section the emissions are less than or equal to the motor vehicle emissions budget as established in the applicable implementation plan or implementation plan submission as follows:

(1) If the applicable implementation plan or implementation plan submission establishes emissions budgets for milestone years, emissions in each milestone year are less than or equal to the motor vehicle emissions budget established for that year;

(2) For nonattainment areas, emissions in the attainment year are less than or equal to the motor vehicle emissions budget established in the applicable implementation plan or implementation plan submission for that year;

(3) For nonattainment areas, emissions in each analysis or horizon year after the attainment year are less than or equal to the motor vehicle emissions budget established by the applicable implementation plan or implementation plan submission for the attainment year. If emissions budgets are established for years after the attainment year, emissions in each analysis year or horizon year must be less than or equal to the motor vehicle emissions budget for that year, if any, or the motor vehicle emissions budget for the most recent budget year prior to the analysis year or horizon year; and

(4) For maintenance areas, emissions in each analysis or horizon year are less than or equal to the motor vehicle emissions budget established by the maintenance plan for that year, if any, or the emissions budget for the most recent budget year prior to the analysis or horizon year.

[58 FR 62216, Nov. 24, 1993, as amended at 60 FR 57185, Nov. 14, 1995]

§51.430 Criteria and procedures: Motor vehicle emissions budget (TIP).

(a) The TIP must be consistent with the motor vehicle emissions budget(s) in the applicable implementation plan (or implementation plan submission). This criterion applies during the transitional period and the control strategy and maintenance periods, except as provided in §51.464. This criterion may be satisfied if the requirements in paragraphs (b) and (c) of this section are met:

(b) For areas with a conforming transportation plan that fully meets the content requirements of §51.404(a), this criterion may be satisfied without additional regional analysis if:

(1) Each program year of the TIP is consistent with the Federal funding which may be reasonably expected for that year, and required State/local matching funds and funds for State/local funding-only projects are consistent with the revenue sources expected over the same period; and

(2) The TIP is consistent with the conforming transportation plan such that the regional emissions analysis already performed for the plan applies to the TIP also. This requires a demonstration that:

(i) The TIP contains all projects which must be started in the TIP's timeframe in order to achieve the highway and transit system envisioned by the transportation plan in each of its horizon years;

(ii) All TIP projects which are regionally significant are part of the specific highway or transit system envisioned in the transportation plan's horizon years; and

(iii) The design concept and scope of each regionally significant project in the TIP is not significantly different from that described in the transportation plan.

(3) If the requirements in paragraphs (b)(1) and (b)(2) of this section are not met, then:

(i) The TIP may be modified to meet those requirements; or

(ii) The transportation plan must be revised so that the requirements in paragraphs (b)(1) and (b)(2) of this section are met. Once the revised plan has been found to conform, this criterion is met for the TIP with no additional analysis except a demonstration that the TIP meets the requirements of paragraphs (b)(1) and (b)(2) of this section.

(c) For areas with a transportation plan that does not meet the content requirements of §51.404(a), a regional emissions analysis must meet all of the following requirements:

(1) The regional emissions analysis shall estimate emissions from the entire transportation system, including all projects contained in the proposed TIP, the transportation plan, and all other regionally significant highway and transit projects expected in the

nonattainment or maintenance area in the timeframe of the transportation plan;

(2) The analysis methodology shall meet the requirements of § 51.452(c); and

(3) The regional analysis shall satisfy the requirements of §§ 51.428(b)(1), 51.428(b)(5), and 51.428(c).

§ 51.432 Criteria and procedures: Motor vehicle emissions budget (project not from a plan and TIP).

(a) The project which is not from a conforming transportation plan and a conforming TIP must be consistent with the motor vehicle emissions budget(s) in the applicable implementation plan (or implementation plan submission). This criterion applies during the transitional period and the control strategy and maintenance periods, except as provided in § 51.464. It is satisfied if emissions from the implementation of the project, when considered with the emissions from the projects in the conforming transportation plan and TIP and all other regionally significant projects expected in the area, do not exceed the motor vehicle emissions budget(s) in the applicable implementation plan (or implementation plan submission).

(b) For areas with a conforming transportation plan that meets the content requirements of § 51.404(a):

(1) This criterion may be satisfied without additional regional analysis if the project is included in the conforming transportation plan, even if it is not specifically included in the latest conforming TIP. This requires a demonstration that:

(i) Allocating funds to the project will not delay the implementation of projects in the transportation plan or TIP which are necessary to achieve the highway and transit system envisioned by the transportation plan in each of its horizon years;

(ii) The project is not regionally significant or is part of the specific highway or transit system envisioned in the transportation plan's horizon years; and

(iii) The design concept and scope of the project is not significantly different from that described in the transportation plan.

(2) If the requirements in paragraph (b)(1) of this section are not met, a regional emissions analysis must be performed as follows:

(i) The analysis methodology shall meet the requirements of § 51.452;

(ii) The analysis shall estimate emissions from the transportation system, including the proposed project and all other regionally significant projects expected in the nonattainment or maintenance area in the timeframe of the transportation plan. The analysis must include emissions from all previously approved projects which were not from a transportation plan and TIP; and

(iii) The emissions analysis shall meet the requirements of §§ 51.428(b)(1), 51.428(b)(4), and 51.428(c).

(c) For areas with a transportation plan that does not meet the content requirements of § 51.404(a), a regional emissions analysis must be performed for the project together with the conforming TIP and all other regionally significant projects expected in the nonattainment or maintenance area. This criterion may be satisfied if:

(1) The analysis methodology meets the requirements of § 51.452(c);

(2) The analysis estimates emissions from the transportation system, including the proposed project, and all other regionally significant projects expected in the nonattainment or maintenance area in the timeframe of the transportation plan; and

(3) The regional analysis satisfies the requirements of §§ 51.428(b)(1), 51.428(b)(5), and 51.428(c).

§ 51.434 Criteria and procedures: Localized CO violations (hot spots) in the interim period.

(a) Each FHWA/FTA project must eliminate or reduce the severity and number of localized CO violations in the area substantially affected by the project (in CO nonattainment areas). This criterion applies during the interim and transitional periods only. This criterion is satisfied with respect to existing localized CO violations if it is demonstrated that existing localized CO violations will be eliminated or reduced in severity and number as a result of the project.

(b) The demonstration must be performed according to the requirements of §§51.402(c)(1)(i) and 51.454.

(c) For projects which are not of the type identified by §51.454(a), this criterion may be satisfied if consideration of local factors clearly demonstrates that existing CO violations will be eliminated or reduced in severity and number. Otherwise, a quantitative demonstration must be performed according to the requirements of §51.454(b).

§51.436 Criteria and procedures: Interim period reductions in ozone and CO areas (transportation plan).

(a) A transportation plan must contribute to emissions reductions in ozone and CO nonattainment areas. This criterion applies during the interim and transitional periods only, except as otherwise provided in §51.464. It applies to the net effect on emissions of all projects contained in a new or revised transportation plan. This criterion may be satisfied if a regional emissions analysis is performed as described in paragraphs (b) through (f) of this section.

(b) Determine the analysis years for which emissions are to be estimated. Analysis years shall be no more than ten years apart. The first analysis year shall be no later than the first milestone year (1995 in CO nonattainment areas and 1996 in ozone nonattainment areas). The second analysis year shall be either the attainment year for the area, or if the attainment year is the same as the first analysis year or earlier, the second analysis year shall be at least five years beyond the first analysis year. The last year of the transportation plan's forecast period shall also be an analysis year.

(c) Define the 'Baseline' scenario for each of the analysis years to be the future transportation system that would result from current programs, composed of the following (except that projects listed in §§51.460 and 51.462 need not be explicitly considered):

(1) All in-place regionally significant highway and transit facilities, services and activities;

(2) All ongoing travel demand management or transportation system management activities; and

(3) Completion of all regionally significant projects, regardless of funding source, which are currently under construction or are undergoing right-of-way acquisition (except for hardship acquisition and protective buying); come from the first three years of the previously conforming transportation plan and/or TIP; or have completed the NEPA process. (For the first conformity determination on the transportation plan after November 24, 1993, a project may not be included in the ''Baseline'' scenario if one of the following major steps has not occurred within the past three years: NEPA process completion; start of final design; acquisition of a significant portion of the right-of-way; or approval of the plans, specifications and estimates. Such a project must be included in the ''Action'' scenario, as described in paragraph (d) of this section.)

(d) Define the 'Action' scenario for each of the analysis years as the transportation system that will result in that year from the implementation of the proposed transportation plan, TIPs adopted under it, and other expected regionally significant projects in the nonattainment area. It will include the following (except that projects listed in §§51.460 and 51.462 need not be explicitly considered):

(1) All facilities, services, and activities in the 'Baseline' scenario;

(2) Completion of all TCMs and regionally significant projects (including facilities, services, and activities) specifically identified in the proposed transportation plan which will be operational or in effect in the analysis year, except that regulatory TCMs may not be assumed to begin at a future time unless the regulation is already adopted by the enforcing jurisdiction or the TCM is identified in the applicable implementation plan;

(3) All travel demand management programs and transportation system management activities known to the MPO, but not included in the applicable implementation plan or utilizing any Federal funding or approval, which have been fully adopted and/or funded by the enforcing jurisdiction or sponsoring agency since the last conformity determination on the transportation plan;

(4) The incremental effects of any travel demand management programs and transportation system management activities known to the MPO, but not included in the applicable implementation plan or utilizing any Federal funding or approval, which were adopted and/or funded prior to the date of the last conformity determination on the transportation plan, but which have been modified since then to be more stringent or effective;

(5) Completion of all expected regionally significant highway and transit projects which are not from a conforming transportation plan and TIP; and

(6) Completion of all expected regionally significant non-FHWA/FTA highway and transit projects that have clear funding sources and commitments leading toward their implementation and completion by the analysis year.

(e) Estimate the emissions predicted to result in each analysis year from travel on the transportation systems defined by the 'Baseline' and 'Action' scenarios and determine the difference in regional VOC and NO_x emissions (unless the Administrator determines that additional reductions of NO_x would not contribute to attainment) between the two scenarios for ozone nonattainment areas and the difference in CO emissions between the two scenarios for CO nonattainment areas. The analysis must be performed for each of the analysis years according to the requirements of § 51.452. Emissions in milestone years which are between the analysis years may be determined by interpolation.

(f) This criterion is met if the regional VOC and NO_xemissions (for ozone nonattainment areas) and CO emissions (for CO nonattainment areas) predicted in the 'Action' scenario are less than the emissions predicted from the 'Baseline' scenario in each analysis year, and if this can reasonably be expected to be true in the periods between the first milestone year and the analysis years. The regional analysis must show that the 'Action' scenario contributes to a reduction in emissions from the 1990 emissions by any nonzero amount.

§ 51.438 Criteria and procedures: Interim period reductions in ozone and CO areas (TIP).

(a) A TIP must contribute to emissions reductions in ozone and CO nonattainment areas. This criterion applies during the interim and transitional periods only, except as otherwise provided in § 51.464. It applies to the net effect on emissions of all projects contained in a new or revised TIP. This criterion may be satisfied if a regional emissions analysis is performed as described in paragraphs (b) through (f) of this section.

(b) Determine the analysis years for which emissions are to be estimated. The first analysis year shall be no later than the first milestone year (1995 in CO nonattainment areas and 1996 in ozone nonattainment areas). The analysis years shall be no more than ten years apart. The second analysis year shall be either the attainment year for the area, or if the attainment year is the same as the first analysis year or earlier, the second analysis year shall be at least five years beyond the first analysis year. The last year of the transportation plan's forecast period shall also be an analysis year.

(c) Define the 'Baseline' scenario as the future transportation system that would result from current programs, composed of the following (except that projects listed in §§ 51.460 and 51.462 need not be explicitly considered):

(1) All in-place regionally significant highway and transit facilities, services and activities;

(2) All ongoing travel demand management or transportation system management activities; and

(3) Completion of all regionally significant projects, regardless of funding source, which are currently under construction or are undergoing right-of-way acquisition (except for hardship acquisition and protective buying); come from the first three years of the previously conforming TIP; or have completed the NEPA process. (For the first conformity determination on the TIP after November 24, 1993, a project may not be included in the ''Baseline'' scenario if one of the following major steps has not occurred within the past three years: NEPA process completion; start of final design; acquisition of a

significant portion of the right-of-way; or approval of the plans, specifications and estimates. Such a project must be included in the ''Action'' scenario, as described in paragraph (d) of this section.)

(d) Define the 'Action' scenario as the future transportation system that will result from the implementation of the proposed TIP and other expected regionally significant projects in the nonattainment area in the timeframe of the transportation plan. It will include the following (except that projects listed in §§51.460 and 51.462 need not be explicitly considered):

(1) All facilities, services, and activities in the 'Baseline' scenario;

(2) Completion of all TCMs and regionally significant projects (including facilities, services, and activities) included in the proposed TIP, except that regulatory TCMs may not be assumed to begin at a future time unless the regulation is already adopted by the enforcing jurisdiction or the TCM is contained in the applicable implementation plan;

(3) All travel demand management programs and transportation system management activities known to the MPO, but not included in the applicable implementation plan or utilizing any Federal funding or approval, which have been fully adopted and/or funded by the enforcing jurisdiction or sponsoring agency since the last conformity determination on the TIP;

(4) The incremental effects of any travel demand management programs and transportation system management activities known to the MPO, but not included in the applicable implementation plan or utilizing any Federal funding or approval, which were adopted and/or funded prior to the date of the last conformity determination on the TIP, but which have been modified since then to be more stringent or effective;

(5) Completion of all expected regionally significant highway and transit projects which are not from a conforming transportation plan and TIP; and

(6) Completion of all expected regionally significant non-FHWA/FTA highway and transit projects that have clear funding sources and commitments leading toward their implementation and completion by the analysis year.

(e) Estimate the emissions predicted to result in each analysis year from travel on the transportation systems defined by the 'Baseline' and 'Action' scenarios, and determine the difference in regional VOC and NO_x emissions (unless the Administrator determines that additional reductions of NO_x would not contribute to attainment) between the two scenarios for ozone nonattainment areas and the difference in CO emissions between the two scenarios for CO nonattainment areas. The analysis must be performed for each of the analysis years according to the requirements of §51.452. Emissions in milestone years which are between analysis years may be determined by interpolation.

(f) This criterion is met if the regional VOC and NO_x emissions in ozone nonattainment areas and CO emissions in CO nonattainment areas predicted in the 'Action' scenario are less than the emissions predicted from the 'Baseline' scenario in each analysis year, and if this can reasonably be expected to be true in the period between the analysis years. The regional analysis must show that the 'Action' scenario contributes to a reduction in emissions from the 1990 emissions by any nonzero amount.

§51.440 Criteria and procedures: Interim period reductions for ozone and CO areas (project not from a plan and TIP).

A Transportation project which is not from a conforming transportation plan and TIP must contribute to emissions reductions in ozone and CO nonattainment areas. This criterion applies during the interim and transitional periods only, except as otherwise provided in §51.464. This criterion is satisfied if a regional emissions analysis is performed which meets the requirements of §51.436 and which includes the transportation plan and project in the 'Action' scenario. If the project which is not from a conforming transportation plan and TIP is a modification of a project currently in the plan or TIP, the 'Baseline' scenario must include the project with its original design concept and scope, and the 'Action' scenario must include the

project with its new design concept and scope.

§ 51.442 Criteria and procedures: Interim period reductions for PM_{10} and NO_2 areas (transportation plan).

(a) A transportation plan must contribute to emission reductions or must not increase emissions in PM_{10} and NO_2 nonattainment areas. This criterion applies only during the interim and transitional periods. It applies to the net effect on emissions of all projects contained in a new or revised transportation plan. This criterion may be satisfied if the requirements of either paragraph (b) or (c) of this section are met.

(b) Demonstrate that implementation of the plan and all other regionally significant projects expected in the nonattainment area will contribute to reductions in emissions of PM_{10} in a PM_{10} nonattainment area (and of each transportation-related precursor of PM_{10} in PM_{10} nonattainment areas if the EPA Regional Administrator or the director of the State air agency has made a finding that such precursor emissions from within the nonattainment area are a significant contributor to the PM_{10} nonattainment problem and has so notified the MPO and DOT) and of NO_x in an NO_2 nonattainment area, by performing a regional emissions analysis as follows:

(1) Determine the analysis years for which emissions are to be estimated. Analysis years shall be no more than ten years apart. The first analysis year shall be no later than 1996 (for NO_2 areas) or four years and six months following the date of designation (for PM_{10} areas). The second analysis year shall be either the attainment year for the area, or if the attainment year is the same as the first analysis year or earlier, the second analysis year shall be at least five years beyond the first analysis year. The last year of the transportation plan's forecast period shall also be an analysis year.

(2) Define for each of the analysis years the ''Baseline'' scenario, as defined in § 51.436(c), and the ''Action'' scenario, as defined in § 51.436(d).

(3) Estimate the emissions predicted to result in each analysis year from travel on the transportation systems defined by the ''Baseline'' and ''Action'' scenarios and determine the difference between the two scenarios in regional PM_{10} emissions in a PM_{10} nonattainment area (and transportation-related precursors of PM_{10} in PM_{10} nonattainment areas if the EPA Regional Administrator or the director of the State air agency has made a finding that such precursor emissions from within the nonattainment area are a significant contributor to the PM_{10} nonattainment problem and has so notified the MPO and DOT) and in NO_x emissions in an NO_2 nonattainment area. The analysis must be performed for each of the analysis years according to the requirements of § 51.452. The analysis must address the periods between the analysis years and the periods between 1990, the first milestone year (if any), and the first of the analysis years. Emissions in milestone years which are between the analysis years may be determined by interpolation.

(4) Demonstrate that the regional PM_{10} emissions and PM_{10} precursor emissions, where applicable, (for PM_{10} nonattainment areas) and NO_x emissions (for NO_2 nonattainment areas) predicted in the 'Action' scenario are less than the emissions predicted from the 'Baseline' scenario in each analysis year, and that this can reasonably be expected to be true in the periods between the first milestone year (if any) and the analysis years.

(c) Demonstrate that when the projects in the transportation plan and all other regionally significant projects expected in the nonattainment area are implemented, the transportation system's total highway and transit emissions of PM_{10} in a PM_{10} nonattainment area (and transportation-related precursors of PM_{10} in PM_{10} nonattainment areas if the EPA Regional Administrator or the director of the State air agency has made a finding that such precursor emissions from within the nonattainment area are a significant contributor to the PM_{10} nonattainment problem and has so notified the MPO and DOT) and of NO_x in an NO_2 nonattainment area will not be greater than baseline levels, by performing a regional emissions analysis as follows:

(1) Determine the baseline regional emissions of PM_{10} and PM_{10} precursors, where applicable (for PM_{10} nonattainment areas) and NO_x (for NO_2 nonattainment areas) from highway and transit sources. Baseline emissions are those estimated to have occurred during calendar year 1990, unless the implementation plan revision required by § 51.396 defines the baseline emissions for a PM_{10} area to be those occurring in a different calendar year for which a baseline emissions inventory was developed for the purpose of developing a control strategy implementation plan.

(2) Estimate the emissions of the applicable pollutant(s) from the entire transportation system, including projects in the transportation plan and TIP and all other regionally significant projects in the nonattainment area, according to the requirements of § 51.452. Emissions shall be estimated for analysis years which are no more than ten years apart. The first analysis year shall be no later than 1996 (for NO_2 areas) or four years and six months following the date of designation (for PM_{10} areas). The second analysis year shall be either the attainment year for the area, or if the attainment year is the same as the first analysis year or earlier, the second analysis year shall be at least five years beyond the first analysis year. The last year of the transportation plan's forecast period shall also be an analysis year.

(3) Demonstrate that for each analysis year the emissions estimated in paragraph (c)(2) of this section are no greater than baseline emissions of PM_{10} and PM_{10} precursors, where applicable (for PM_{10} nonattainment areas) or NO_x (for NO_2 nonattainment areas) from highway and transit sources.

§ 51.444 Criteria and procedures: Interim period reductions for PM_{10} and NO_2 areas (TIP).

(a) A TIP must contribute to emission reductions or must not increase emissions in PM_{10} and NO_2 nonattainment areas. This criterion applies only during the interim and transitional periods. It applies to the net effect on emissions of all projects contained in a new or revised TIP. This criterion may be satisfied if the requirements of either paragraph (b) or paragraph (c) of this section are met.

(b) Demonstrate that implementation of the plan and TIP and all other regionally significant projects expected in the nonattainment area will contribute to reductions in emissions of PM_{10} in a PM_{10} nonattainment area (and transportation-related precursors of PM_{10} in PM_{10} nonattainment areas if the EPA Regional Administrator or the director of the State air agency has made a finding that such precursor emissions from within the nonattainment area are a significant contributor to the PM_{10} nonattainment problem and has so notified the MPO and DOT) and of NO_x in an NO_2 nonattainment area, by performing a regional emissions analysis as follows:

(1) Determine the analysis years for which emissions are to be estimated, according to the requirements of § 51.442(b)(1).

(2) Define for each of the analysis years the ''Baseline'' scenario, as defined in § 51.438(c), and the ''Action'' scenario, as defined in § 51.438(d).

(3) Estimate the emissions predicted to result in each analysis year from travel on the transportation systems defined by the ''Baseline'' and ''Action'' scenarios as required by § 51.442(b)(3), and make the demonstration required by § 51.442(b)(4).

(c) Demonstrate that when the projects in the transportation plan and TIP and all other regionally significant projects expected in the area are implemented, the transportation system's total highway and transit emissions of PM_{10} in a PM_{10} nonattainment area (and transportation-related precursors of PM_{10} in PM_{10} nonattainment areas if the EPA Regional Administrator or the director of the State air agency has made a finding that such precursor emissions from within the nonattainment area are a significant contributor to the PM_{10} nonattainment problem and has so notified the MPO and DOT) and of NO_x in an NO_2 nonattainment area will not be greater than baseline levels, by performing a regional emissions analysis as required by § 51.442(c)(1)–(3).

§ 51.446 Criteria and procedures: Interim period reductions for PM_{10} and NO_2 areas (project not from a plan and TIP).

A transportation project which is not from a conforming transportation plan and TIP must contribute to emission reductions or must not increase emissions in PM_{10} and NO_2 nonattainment areas. This criterion applies during the interim and transitional periods only. This criterion is met if a regional emissions analysis is performed which meets the requirements of § 51.442 and which includes the transportation plan and project in the 'Action' scenario. If the project which is not from a conforming transportation plan and TIP is a modification of a project currently in the transportation plan or TIP, and § 51.442(b) is used to demonstrate satisfaction of this criterion, the 'Baseline' scenario must include the project with its original design concept and scope, and the 'Action' scenario must include the project with its new design concept and scope.

§ 51.448 Transition from the interim period to the control strategy period.

(a) *Control strategy implementation plan submissions.* (1) The transportation plan and TIP must be demonstrated to conform by 18 months from the date of the State's initial submission to EPA of each control strategy implementation plan establishing a motor vehicle emissions budget. If conformity is not determined by 18 months from the date of submission of such control strategy implementation plan, the conformity status of the transportation plan and TIP will lapse, and no new project-level conformity determinations may be made, until the transportation plan and TIP have been demonstrated to conform.

(2) For areas not yet in the control strategy period for a given pollutant, conformity shall be demonstrated using the motor vehicle emissions budget(s) in a submitted control strategy implementation plan revision for that pollutant beginning 90 days after submission, unless EPA declares such budget(s) inadequate for transportation conformity purposes. The motor vehicle emissions budget(s) may be used to determine conformity during the first 90 days after its submission if EPA agrees that the budget(s) are adequate for conformity purposes.

(b) *Disapprovals.* (1) If EPA disapproves the submitted control strategy implementation plan revision and so notifies the State, MPO, and DOT, which initiates the sanction process under Clean Air Act section 179 or 110(m), the conformity status of the transportation plan and TIP shall lapse 120 days after EPA's disapproval, and no new project-level conformity determinations may be made. No new transportation plan, TIP, or project may be found to conform until another control strategy implementation plan revision fulfilling the same Clean Air Act requirements is submitted and conformity to this submission is determined.

(2) Notwithstanding paragraph (b)(1) of this section, if EPA disapproves the submitted control strategy implementation plan revision but makes a protective finding, the conformity status of the transportation plan and TIP shall lapse on the date that highway sanctions as a result of the disapproval are imposed on the nonattainment area under section 179(b)(1) of the Clean Air Act. No new transportation plan, TIP, or project may be found to conform until another control strategy implementation plan revision fulfilling the same Clean Air Act requirements is submitted and conformity to this submission is determined.

(c) *Failure to submit and incompleteness.* For areas where EPA notifies the State, MPO, and DOT of the State's failure to submit or submission of an incomplete control strategy implementation plan revision, which initiates the sanction process under Clean Air Act section 179 or 110(m), the conformity status of the transportation plan and TIP shall lapse on the date that highway sanctions are imposed on the nonattainment area for such failure under section 179(b)(1) of the Clean Air Act, unless the failure has been remedied and acknowledged by a letter from the EPA Regional Administrator.

(d) *Federal implementation plans.* When EPA promulgates a federal implementation plan that contains motor vehicle emissions budget(s) as a result of a

State failure, the conformity lapse imposed by this section because of that State failure is removed.

(e) *Projects.* If the currently conforming transportation plan and TIP have not been demonstrated to conform according to transitional period criteria and procedures, the requirements of paragraphs (e) (1) and (2) of this section must be met.

(1) Before a FHWA/FTA project which is regionally significant and increases single-occupant vehicle capacity (a new general purpose highway on a new location or adding general purpose lanes) may be found to conform, the State air agency must be consulted on how the emissions which the existing transportation plan and TIP's conformity determination estimates for the ''Action'' scenario (as required by §§51.436 through 51.446) compare to the motor vehicle emissions budget in the implementation plan submission or the projected motor vehicle emissions budget in the implementation plan under development.

(2) In the event of unresolved disputes on such project-level conformity determinations, the State air agency may escalate the issue to the Governor consistent with the procedure in §51.402(d), which applies for any State air agency comments on a conformity determination.

(f) *Redetermination of conformity of the existing transportation plan and TIP according to the transitional period criteria and procedures.* (1) The redetermination of the conformity of the existing transportation plan and TIP according to transitional period criteria and procedures (as required by paragraphs (a)(1) and (d)(1) of this section) does not require new emissions analysis and does not have to satisfy the requirements of §§51.412 and 51.414 if:

(i) The control strategy implementation plan revision submitted to EPA uses the MPO's modeling of the existing transportation plan and TIP for its projections of motor vehicle emissions; and

(ii) The control strategy implementation plan does not include any transportation projects which are not included in the transportation plan and TIP.

(2) A redetermination of conformity as described in paragraph (f)(1) of this section is not considered a conformity determination for the purposes of §51.400(b)(4) or §51.400(c)(4) regarding the maximum intervals between conformity determinations. Conformity must be determined according to all the applicable criteria and procedures of §51.410 within three years of the last determination which did not rely on paragraph (f)(1) of this section.

(g) *Nonattainment areas which are not required to demonstrate reasonable further progress and attainment.* If an area listed in §51.464 submits a control strategy implementation plan revision, the requirements of paragraphs (a) and (e) of this section apply. Because the areas listed in §51.464 are not required to demonstrate reasonable further progress and attainment the provisions of paragraphs (b) and (c) of this section do not apply to these areas.

(h) *Maintenance plans.* If a control strategy implementation plan revision is not submitted to EPA but a maintenance plan required by Clean Air Act section 175A is submitted to EPA, the requirements of paragraph (a) or (d) of this section apply, with the maintenance plan submission treated as a ''control strategy implementation plan revision'' for the purposes of those requirements.

[58 FR 62216, Nov. 24, 1993, as amended at 60 FR 57185, Nov. 14, 1995]

§51.450 Requirements for adoption or approval of projects by recipients of funds designated under title 23 U.S.C. or the Federal Transit Act.

No recipient of federal funds designated under title 23 U.S.C. or the Federal Transit Act shall adopt or approve a regionally significant highway or transit project, regardless of funding source, unless there is a currently conforming transportation plan and TIP consistent with the requirements of §51.420 and the requirements of one of the following paragraphs (a) through (e) of this section are met:

(a) The project comes from a conforming plan and program consistent with the requirements of §51.422;

(b) The project is included in the regional emissions analysis supporting

the currently conforming TIP's conformity determination, even if the project is not strictly ''included'' in the TIP for the purposes of MPO project selection or endorsement, and the project's design concept and scope have not changed significantly from those which were included in the regional emissions analysis, or in a manner which would significantly impact use of the facility;

(c) During the control strategy or maintenance period, the project is consistent with the motor vehicle emissions budget(s) in the applicable implementation plan consistent with the requirements of § 51.432;

(d) During Phase II of the interim period, the project contributes to emissions reductions or does not increase emissions consistent with the requirements of § 51.440 (in ozone and CO nonattainment areas) or § 51.446 (in PM_{10} and NO_2 nonattainment areas); or

(e) During the transitional period, the project satisfies the requirements of both paragraphs (c) and (d) of this section.

§ 51.452 Procedures for determining regional transportation-related emissions.

(a) *General requirements.* (1) The regional emissions analysis for the transportation plan, TIP, or project not from a conforming plan and TIP shall include all regionally significant projects expected in the nonattainment or maintenance area, including FHWA/FTA projects proposed in the transportation plan and TIP and all other regionally significant projects which are disclosed to the MPO as required by § 51.402. Projects which are not regionally significant are not required to be explicitly modeled, but VMT from such projects must be estimated in accordance with reasonable professional practice. The effects of TCMs and similar projects that are not regionally significant may also be estimated in accordance with reasonable professional practice.

(2) The emissions analysis may not include for emissions reduction credit any TCMs which have been delayed beyond the scheduled date(s) until such time as implementation has been assured. If the TCM has been partially implemented and it can be demonstrated that it is providing quantifiable emission reduction benefits, the emissions analysis may include that emissions reduction credit.

(3) Emissions reduction credit from projects, programs, or activities which require a regulation in order to be implemented may not be included in the emissions analysis unless the regulation is already adopted by the enforcing jurisdiction. Adopted regulations are required for demand management strategies for reducing emissions which are not specifically identified in the applicable implementation plan, and for control programs which are external to the transportation system itself, such as tailpipe or evaporative emission standards, limits on gasoline volatility, inspection and maintenance programs, and oxygenated or reformulated gasoline or diesel fuel. A regulatory program may also be considered to be adopted if an opt-in to a Federally enforced program has been approved by EPA, if EPA has promulgated the program (if the control program is a Federal responsibility, such as tailpipe standards), or if the Clean Air Act requires the program without need for individual State action and without any discretionary authority for EPA to set its stringency, delay its effective date, or not implement the program.

(4) Notwithstanding paragraph (a)(3) of this section, during the transitional period, control measures or programs which are committed to in an implementation plan submission as described in §§ 51.428 through 51.432, but which has not received final EPA action in the form of a finding of incompleteness, approval, or disapproval may be assumed for emission reduction credit for the purpose of demonstrating that the requirements of §§ 51.428 through 51.432 are satisfied.

(5) A regional emissions analysis for the purpose of satisfying the requirements of §§ 51.436 through 51.440 may account for the programs in paragraph (a)(4) of this section, but the same assumptions about these programs shall be used for both the ''Baseline'' and ''Action'' scenarios.

(6) Ambient temperatures shall be consistent with those used to establish the emissions budget in the applicable

implementation plan. Factors other than temperatures, for example the fraction of travel in a hot stabilized engine mode, may be modified after interagency consultation according to § 51.402 if the newer estimates incorporate additional or more geographically specific information or represent a logically estimated trend in such factors beyond the period considered in the applicable implementation plan.

(b) *Serious, severe, and extreme ozone nonattainment areas and serious carbon monoxide areas after January 1, 1995.* Estimates of regional transportation-related emissions used to support conformity determinations must be made according to procedures which meet the requirements in paragraphs (b)(1) through (5) of this section.

(1) A network-based transportation demand model or models relating travel demand and transportation system performance to land-use patterns, population demographics, employment, transportation infrastructure, and transportation policies must be used to estimate travel within the metropolitan planning area of the nonattainment area. Such a model shall possess the following attributes:

(i) The modeling methods and the functional relationships used in the model(s) shall in all respects be in accordance with acceptable professional practice, and reasonable for purposes of emission estimation;

(ii) The network-based model(s) must be validated against ground counts for a base year that is not more than 10 years prior to the date of the conformity determination. Land use, population, and other inputs must be based on the best available information and appropriate to the validation base year;

(iii) For peak-hour or peak-period traffic assignments, a capacity sensitive assignment methodology must be used;

(iv) Zone-to-zone travel times used to distribute trips between origin and destination pairs must be in reasonable agreement with the travel times which result from the process of assignment of trips to network links. Where use of transit currently is anticipated to be a significant factor in satisfying transportation demand, these times should also be used for modeling mode splits;

(v) Free-flow speeds on network links shall be based on empirical observations;

(vi) Peak and off-peak travel demand and travel times must be provided;

(vii) Trip distribution and mode choice must be sensitive to pricing, where pricing is a significant factor, if the network model is capable of such determinations and the necessary information is available;

(viii) The model(s) must utilize and document a logical correspondence between the assumed scenario of land development and use and the future transportation system for which emissions are being estimated. Reliance on a formal land-use model is not specifically required but is encouraged;

(ix) A dependence of trip generation on the accessibility of destinations via the transportation system (including pricing) is strongly encouraged but not specifically required, unless the network model is capable of such determinations and the necessary information is available;

(x) A dependence of regional economic and population growth on the accessibility of destinations via the transportation system is strongly encouraged but not specifically required, unless the network model is capable of such determinations and the necessary information is available; and

(xi) Consideration of emissions increases from construction-related congestion is not specifically required.

(2) Highway Performance Monitoring System (HPMS) estimates of vehicle miles traveled shall be considered the primary measure of vehicle miles traveled within the portion of the nonattainment or maintenance area and for the functional classes of roadways included in HPMS, for urban areas which are sampled on a separate urban area basis. A factor (or factors) shall be developed to reconcile and calibrate the network-based model estimates of vehicle miles traveled in the base year of its validation to the HPMS estimates for the same period, and these factors shall be applied to model estimates of future vehicle miles traveled. In this factoring process, consideration

will be given to differences in the facility coverage of the HPMS and the modeled network description. Departure from these procedures is permitted with the concurrence of DOT and EPA.

(3) Reasonable methods shall be used to estimate nonattainment area vehicle travel on off-network roadways within the urban transportation planning area, and on roadways outside the urban transportation planning area.

(4) Reasonable methods in accordance with good practice must be used to estimate traffic speeds and delays in a manner that is sensitive to the estimated volume of travel on each roadway segment represented in the network model.

(c) *Areas which are not serious, severe, or extreme ozone nonattainment areas or serious carbon monoxide areas, or before January 1, 1995.* (1) Procedures which satisfy some or all of the requirements of paragraph (b) of this section shall be used in all areas not subject to paragraph (b) of this section in which those procedures have been the previous practice of the MPO.

(2) Regional emissions may be estimated by methods which do not explicitly or comprehensively account for the influence of land use and transportation infrastructure on vehicle miles traveled and traffic speeds and congestion. Such methods must account for VMT growth by extrapolating historical VMT or projecting future VMT by considering growth in population and historical growth trends for vehicle miles travelled per person. These methods must also consider future economic activity, transit alternatives, and transportation system policies.

(d) *Projects not from a conforming plan and TIP in isolated rural nonattainment and maintenance areas.* This paragraph applies to any nonattainment or maintenance area or any portion thereof which does not have a metropolitan transportation plan or TIP and whose projects are not part of the emissions analysis of any MPO's metropolitan transportation plan or TIP (because the nonattainment or maintenance area or portion thereof does not contain a metropolitan planning area or portion of a metropolitan planning area and is not part of a Metropolitan Statistical Area or Consolidated Metropolitan Statistical Area which is or contains a nonattainment or maintenance area).

(1) Conformity demonstrations for projects in these areas may satisfy the requirements of §§ 51.432, 51.440, and 51.446 with one regional emissions analysis which includes all the regionally significant projects in the nonattainment or maintenance area (or portion thereof).

(2) The requirements of § 51.432 shall be satisfied according to the procedures in § 51.432(c), with references to the ''transportation plan'' taken to mean the statewide transportation plan.

(3) The requirements of §§ 51.440 and 51.446 which reference ''transportation plan'' or ''TIP'' shall be taken to mean those projects in the statewide transportation plan or statewide TIP which are in the nonattainment or maintenance area (or portion thereof).

(4) The requirement of § 51.450(b) shall be satisfied if:

(i) The project is included in the regional emissions analysis which includes all regionally significant highway and transportation projects in the nonattainment or maintenance area (or portion thereof) and supports the most recent conformity determination made according to the requirements of §§ 51.432, 51.440, or 51.446 (as modified by paragraphs (d)(2) and (d)(3) of this section), as appropriate for the time period and pollutant; and

(ii) The project's design concept and scope have not changed significantly from those which were included in the regional emissions analysis, or in a manner which would significantly impact use of the facility.

(e) *PM_{10} from construction-related fugitive dust.* (1) For areas in which the implementation plan does not identify construction-related fugitive PM_{10} as a contributor to the nonattainment problem, the fugitive PM_{10} emissions associated with highway and transit project construction are not required to be considered in the regional emissions analysis.

(2) In PM_{10} nonattainment and maintenance areas with implementation plans which identify construction-related fugitive PM_{10} as a contributor to the nonattainment problem, the regional PM_{10} emissions analysis shall

consider construction-related fugitive PM_{10} and shall account for the level of construction activity, the fugitive PM_{10} control measures in the applicable implementation plan, and the dust-producing capacity of the proposed activities.

[58 FR 62216, Nov. 24, 1993, as amended at 60 FR 57186, Nov. 14, 1995]

§51.454 Procedures for determining localized CO and PM_{10} concentrations (hot-spot analysis).

(a) In the following cases, CO hot-spot analyses must be based on the applicable air quality models, data bases, and other requirements specified in 40 CFR part 51, appendix W (''Guideline on Air Quality Models (Revised)'' (1988), supplement A (1987) and supplement B (1993), EPA publication no. 450/2–78–027R), unless, after the interagency consultation process described in §51.402 and with the approval of the EPA Regional Administrator, these models, data bases, and other requirements are determined to be inappropriate:

(1) For projects in or affecting locations, areas, or categories of sites which are identified in the applicable implementation plan as sites of current violation or possible current violation;

(2) For those intersections at Level-of-Service D, E, or F, or those that will change to Level-of-Service D, E, or F because of increased traffic volumes related to a new project in the vicinity;

(3) For any project involving or affecting any of the intersections which the applicable implementation plan identifies as the top three intersections in the nonattainment or maintenance area based on the highest traffic volumes;

(4) For any project involving or affecting any of the intersections which the applicable implementation plan identifies as the top three intersections in the nonattainment or maintenance area based on the worst Level-of-Service; and

(5) Where use of the ''Guideline'' models is practicable and reasonable given the potential for violations.

(b) In cases other than those described in paragraph (a) of this section, other quantitative methods may be used if they represent reasonable and common professional practice.

(c) CO hot-spot analyses must include the entire project, and may be performed only after the major design features which will significantly impact CO concentrations have been identified. The background concentration can be estimated using the ratio of future to current traffic multiplied by the ratio of future to current emission factors.

(d) PM_{10} hot-spot analysis must be performed for projects which are located at sites at which violations have been verified by monitoring, and at sites which have essentially identical vehicle and roadway emission and dispersion characteristics (including sites near one at which a violation has been monitored). The projects which require PM_{10} hot-spot analysis shall be determined through the interagency consultation process required in §51.402. In PM_{10} nonattainment and maintenance areas, new or expanded bus and rail terminals and transfer points which increase the number of diesel vehicles congregating at a single location require hot-spot analysis. DOT may choose to make a categorical conformity determination on bus and rail terminals or transfer points based on appropriate modeling of various terminal sizes, configurations, and activity levels. The requirements of this paragraph for quantitative hot-spot analysis will not take effect until EPA releases modeling guidance on this subject and announces in the FEDERAL REGISTER that these requirements are in effect.

(e) Hot-spot analysis assumptions must be consistent with those in the regional emissions analysis for those inputs which are required for both analyses.

(f) PM_{10} or CO mitigation or control measures shall be assumed in the hot-spot analysis only where there are written commitments from the project sponsor and/or operator to the implementation of such measures, as required by §51.458(a).

(g) CO and PM_{10} hot-spot analyses are not required to consider construction-related activities which cause temporary increases in emissions. Each site which is affected by construction-related activities shall be considered

separately, using established ''Guideline'' methods. Temporary increases are defined as those which occur only during the construction phase and last five years or less at any individual site.

§ 51.456 Using the motor vehicle emissions budget in the applicable implementation plan (or implementation plan submission).

(a) In interpreting an applicable implementation plan (or implementation plan submission) with respect to its motor vehicle emissions budget(s), the MPO and DOT may not infer additions to the budget(s) that are not explicitly intended by the implementation plan (or submission). Unless the implementation plan explicitly quantifies the amount by which motor vehicle emissions could be higher while still allowing a demonstration of compliance with the milestone, attainment, or maintenance requirement and explicitly states an intent that some or all of this additional amount should be available to the MPO and DOT in the emission budget for conformity purposes, the MPO may not interpret the budget to be higher than the implementation plan's estimate of future emissions. This applies in particular to applicable implementation plans (or submissions) which demonstrate that after implementation of control measures in the implementation plan:

(1) Emissions from all sources will be less than the total emissions that would be consistent with a required demonstration of an emissions reduction milestone;

(2) Emissions from all sources will result in achieving attainment prior to the attainment deadline and/or ambient concentrations in the attainment deadline year will be lower than needed to demonstrate attainment; or

(3) Emissions will be lower than needed to provide for continued maintenance.

(b) If an applicable implementation plan submitted before November 24, 1993 demonstrates that emissions from all sources will be less than the total emissions that would be consistent with attainment and quantifies that ''safety margin,'' the State may submit a SIP revision which assigns some or all of this safety margin to highway and transit mobile sources for the purposes of conformity. Such a SIP revision, once it is endorsed by the Governor and has been subject to a public hearing, may be used for the purposes of transportation conformity before it is approved by EPA.

(c) A conformity demonstration shall not trade emissions among budgets which the applicable implementation plan (or implementation plan submission) allocates for different pollutants or precursors, or among budgets allocated to motor vehicles and other sources, without a SIP revision or a SIP which establishes mechanisms for such trades.

(d) If the applicable implementation plan (or implementation plan submission) estimates future emissions by geographic subarea of the nonattainment area, the MPO and DOT are not required to consider this to establish subarea budgets, unless the applicable implementation plan (or implementation plan submission) explicitly indicates an intent to create such subarea budgets for the purposes of conformity.

(e) If a nonattainment area includes more than one MPO, the SIP may establish motor vehicle emissions budgets for each MPO, or else the MPOs must collectively make a conformity determination for the entire nonattainment area.

§ 51.458 Enforceability of design concept and scope and project-level mitigation and control measures.

(a) Prior to determining that a transportation project is in conformity, the MPO, other recipient of funds designated under title 23 U.S.C. or the Federal Transit Act, FHWA, or FTA must obtain from the project sponsor and/or operator written commitments to implement in the construction of the project and operation of the resulting facility or service any project-level mitigation or control measures which are identified as conditions for NEPA process completion with respect to local PM_{10} or CO impacts. Before making conformity determinations written commitments must also be obtained for project-level mitigation or control measures which are conditions for making conformity determinations for

a transportation plan or TIP and included in the project design concept and scope which is used in the regional emissions analysis required by §§51.428 through 51.432 and §§51.436 through 51.440 or used in the project-level hotspot analysis required by §§51.424 and 51.434.

(b) Project sponsors voluntarily committing to mitigation measures to facilitate positive conformity determinations must comply with the obligations of such commitments.

(c) The implementation plan revision required in §51.396 shall provide that written commitments to mitigation measures must be obtained prior to a positive conformity determination, and that project sponsors must comply with such commitments.

(d) During the control strategy and maintenance periods, if the MPO or project sponsor believes the mitigation or control measure is no longer necessary for conformity, the project sponsor or operator may be relieved of its obligation to implement the mitigation or control measure if it can demonstrate that the requirements of §§51.424, 51.428, and 51.430 are satisfied without the mitigation or control measure, and so notifies the agencies involved in the interagency consultation process required under §51.402. The MPO and DOT must confirm that the transportation plan and TIP still satisfy the requirements of §§51.428 and 51.430 and that the project still satisfies the requirements of §51.424, and therefore that the conformity determinations for the transportation plan, TIP, and project are still valid.

§51.460 Exempt projects.

Notwithstanding the other requirements of this subpart, highway and transit projects of the types listed in Table 2 are exempt from the requirement that a conformity determination be made. Such projects may proceed toward implementation even in the absence of a conforming transportation plan and TIP. A particular action of the type listed in Table 2 is not exempt if the MPO in consultation with other agencies (see §51.402(c)(1)(iii)), the EPA, and the FHWA (in the case of a highway project) or the FTA (in the case of a transit project) concur that it has potentially adverse emissions impacts for any reason. States and MPOs must ensure that exempt projects do not interfere with TCM implementation.

TABLE 2.—EXEMPT PROJECTS

Safety
Railroad/highway crossing.
Hazard elimination program.
Safer non-Federal-aid system roads.
Shoulder improvements.
Increasing sight distance.
Safety improvement program.
Traffic control devices and operating assistance other than signalization projects.
Railroad/highway crossing warning devices.
Guardrails, median barriers, crash cushions.
Pavement resurfacing and/or rehabilitation.
Pavement marking demonstration.
Emergency relief (23 U.S.C. 125).
Fencing.
Skid treatments.
Safety roadside rest areas.
Adding medians.
Truck climbing lanes outside the urbanized area.
Lighting improvements.
Widening narrow pavements or reconstructing bridges (no additional travel lanes).
Emergency truck pullovers.
Mass Transit
Operating assistance to transit agencies.

TABLE 2.—EXEMPT PROJECTS—Continued

Purchase of support vehicles.
Rehabilitation of transit vehicles.[1]
Purchase of office, shop, and operating equipment for existing facilities.
Purchase of operating equipment for vehicles (e.g., radios, fareboxes, lifts, etc.).
Construction or renovation of power, signal, and communications systems.
Construction of small passenger shelters and information kiosks.
Reconstruction or renovation of transit buildings and structures (e.g., rail or bus buildings, storage and maintenance facilities, stations, terminals, and ancillary structures).
Rehabilitation or reconstruction of track structures, track, and track bed in existing rights-of-way.
Purchase of new buses and rail cars to replace existing vehicles or for minor expansions of the fleet.[1]
Construction of new bus or rail storage/maintenance facilities categorically excluded in 23 CFR part 771.

Air Quality

Continuation of ride-sharing and van-pooling promotion activities at current levels.
Bicycle and pedestrian facilities.

Other

Specific activities which do not involve or lead directly to construction, such as:
- Planning and technical studies.
- Grants for training and research programs.
- Planning activities conducted pursuant to titles 23 and 49 U.S.C.
- Federal-aid systems revisions.

Engineering to assess social, economic, and environmental effects of the proposed action or alternatives to that action.
Noise attenuation.
Advance land acquisitions (23 CFR part 712 or 23 CFR part 771).
Acquisition of scenic easements.
Plantings, landscaping, etc.
Sign removal.
Directional and informational signs.
Transportation enhancement activities (except rehabilitation and operation of historic transportation buildings, structures, or facilities).
Repair of damage caused by natural disasters, civil unrest, or terrorist acts, except projects involving substantial functional, locational or capacity changes.

[1] PM_{10} nonattainment or maintenance areas, such projects are exempt only if they are in compliance with control measures in the applicable implementation plan.

§ 51.462 Projects exempt from regional emissions analyses.

Notwithstanding the other requirements of this subpart, highway and transit projects of the types listed in Table 3 are exempt from regional emissions analysis requirements. The local effects of these projects with respect to CO or PM_{10} concentrations must be considered to determine if a hot-spot analysis is required prior to making a project-level conformity determination. These projects may then proceed to the project development process even in the absence of a conforming transportation plan and TIP. A particular action of the type listed in Table 3 is not exempt from regional emissions analysis if the MPO in consultation with other agencies (see § 51.402(c)(1)(iii)), the EPA, and the FHWA (in the case of a highway project) or the FTA (in the case of a transit project) concur that it has potential regional impacts for any reason.

TABLE 3.—PROJECTS EXEMPT FROM REGIONAL EMISSIONS ANALYSES

Intersection channelization projects.
Intersection signalization projects at individual intersections.
Interchange reconfiguration projects.
Changes in vertical and horizontal alignment.

TABLE 3.—PROJECTS EXEMPT FROM REGIONAL EMISSIONS ANALYSES—Continued

Truck size and weight inspection stations.
Bus terminals and transfer points.

§51.464 Special provisions for nonattainment areas which are not required to demonstrate reasonable further progress and attainment.

(a) *Application.* This section applies in the following areas:

(1) Rural transport ozone nonattainment areas;

(2) Marginal ozone areas;

(3) Submarginal ozone areas;

(4) Transitional ozone areas;

(5) Incomplete data ozone areas;

(6) Moderate CO areas with a design value of 12.7 ppm or less; and

(7) Not classified CO areas.

(b) *Default conformity procedures.* The criteria and procedures in §§51.436 through 51.440 will remain in effect throughout the control strategy period for transportation plans, TIPs, and projects (not from a conforming plan and TIP) in lieu of the procedures in §§51.428 through 51.432, except as otherwise provided in paragraph (c) of this section.

(c) *Optional conformity procedures.* The State or MPO may voluntarily develop an attainment demonstration and corresponding motor vehicle emissions budget like those required in areas with higher nonattainment classifications. In this case, the State must submit an implementation plan revision which contains that budget and attainment demonstration. Once EPA has approved this implementation plan revision, the procedures in §§51.428 through 51.432 apply in lieu of the procedures in §§51.436 through 51.440

Subpart U—Economic Incentive Programs

SOURCE: 59 FR 16710, Apr. 7, 1994, unless otherwise noted.

§51.490 Applicability.

(a) The rules in this subpart apply to any statutory economic incentive program (EIP) submitted to the EPA as an implementation plan revision to comply with sections 182(g)(3), 182(g)(5), 187(d)(3), or 187(g) of the Act. Such programs may be submitted by any authorized governmental organization, including States, local governments, and Indian governing bodies.

(b) The provisions contained in these rules, except as explicitly exempted, shall also serve as the EPA's policy guidance on discretionary EIP's submitted as implementation plan revisions for any purpose other than to comply with the statutory requirements specified in paragraph (a) of this section.

§51.491 Definitions.

Act means the Clean Air Act as amended November 15, 1990.

Actual emissions means the emissions of a pollutant from an affected source determined by taking into account actual emission rates associated with normal source operation and actual or representative production rates (i.e., capacity utilization and hours of operation).

Affected source means any stationary, area, or mobile source of a criteria pollutant(s) to which an EIP applies. This term applies to sources explicitly included at the start of a program, as well as sources that voluntarily enter (i.e., opt into) the program.

Allowable emissions means the emissions of a pollutant from an affected source determined by taking into account the most stringent of all applicable SIP emissions limits and the level of emissions consistent with source compliance with all Federal requirements related to attainment and maintenance of the NAAQS and the production rate associated with the maximum rated capacity and hours of operation (unless the source is subject to federally enforceable limits which restrict the operating rate, or hours of operation, or both).

Area sources means stationary and nonroad sources that are too small and/or too numerous to be individually included in a stationary source emissions inventory.

Attainment area means any area of the country designated or redesignated by the EPA at 40 CFR part 81 in accordance with section 107(d) as having attained the relevant NAAQS for a given criteria pollutant. An area can be an

attainment area for some pollutants and a nonattainment area for other pollutants.

Attainment demonstration means the requirement in section 182(b)(1)(A) of the Act to demonstrate that the specific annual emissions reductions included in a SIP are sufficient to attain the primary NAAQS by the date applicable to the area.

Directionally-sound strategies are strategies for which adequate procedures to quantify emissions reductions or specify a program baseline are not defined as part of the EIP.

Discretionary economic incentive program means any EIP submitted to the EPA as an implementation plan revision for purposes other than to comply with the statutory requirements of sections 182(g)(3), 182(g)(5), 187(d)(3), or 187(g) of the Act.

Economic incentive program (EIP) means a program which may include State established emission fees or a system of marketable permits, or a system of State fees on sale or manufacture of products the use of which contributes to O_3 formation, or any combination of the foregoing or other similar measures, as well as incentives and requirements to reduce vehicle emissions and vehicle miles traveled in the area, including any of the transportation control measures identified in section 108(f). Such programs may be directed toward stationary, area, and/or mobile sources, to achieve emissions reductions milestones, to attain and maintain ambient air quality standards, and/or to provide more flexible, lower-cost approaches to meeting environmental goals. Such programs are categorized into the following three categories: Emission-limiting, market-response, and directionally-sound strategies.

Emission-limiting strategies are strategies that directly specify limits on total mass emissions, emission-related parameters (e.g., emission rates per unit of production, product content limits), or levels of emissions reductions relative to a program baseline that are required to be met by affected sources, while providing flexibility to sources to reduce the cost of meeting program requirements.

Indian governing body means the governing body of any tribe, band, or group of Indians subject to the jurisdiction of the U.S. and recognized by the U.S. as possessing power of self-government.

Maintenance plan means an implementation plan for an area for which the State is currently seeking designation or has previously sought redesignation to attainment, under section 107(d) of the Act, which provides for the continued attainment of the NAAQS.

Market-response strategies are strategies that create one or more incentives for affected sources to reduce emissions, without directly specifying limits on emissions or emission-related parameters that individual sources or even all sources in the aggregate are required to meet.

Milestones means the reductions in emissions required to be achieved pursuant to section 182(b)(1) and the corresponding requirements in section 182(c)(2) (B) and (C), 182(d), and 182(e) of the Act for O_3 nonattainment areas, as well as the reduction in emissions of CO equivalent to the total of the specified annual emissions reductions required by December 31, 1995, pursuant to section 187(d)(1).

Mobile sources means on-road (highway) vehicles (e.g., automobiles, trucks and motorcycles) and nonroad vehicles (e.g., trains, airplanes, agricultural equipment, industrial equipment, construction vehicles, off-road motorcycles, and marine vessels).

National ambient air quality standard (NAAQS) means a standard set by the EPA at 40 CFR part 50 under section 109 of the Act.

Nonattainment area means any area of the country designated by the EPA at 40 CFR part 81 in accordance with section 107(d) of the Act as nonattainment for one or more criteria pollutants. An area could be a nonattainment area for some pollutants and an attainment area for other pollutants.

Nondiscriminatory means that a program in one State does not result in discriminatory effects on other States or sources outside the State with regard to interstate commerce.

Program baseline means the level of emissions, or emission-related parameter(s), for each affected source

or group of affected sources, from which program results (e.g., quantifiable emissions reductions) shall be determined.

Program uncertainty factor means a factor applied to discount the amount of emissions reductions credited in an implementation plan demonstration to account for any strategy-specific uncertainties in an EIP.

Reasonable further progress (RFP) plan means any incremental emissions reductions required by the CAA (e.g., section 182(b)) and approved by the EPA as meeting these requirements.

Replicable refers to methods which are sufficiently unambiguous such that the same or equivalent results would be obtained by the application of the methods by different users.

RFP baseline means the total of actual volatile organic compounds or nitrogen oxides emissions from all anthropogenic sources in an O_3 nonattainment area during the calendar year 1990 (net of growth and adjusted pursuant to section 182(b)(1)(B) of the Act), expressed as typical O_3 season, weekday emissions.

Rule compliance factor means a factor applied to discount the amount of emissions reductions credited in an implementation plan demonstration to account for less-than-complete compliance by the affected sources in an EIP.

Shortfall means the difference between the amount of emissions reductions credited in an implementation plan for a particular EIP and those that are actually achieved by that EIP, as determined through an approved reconciliation process.

State means State, local government, or Indian-governing body.

State implementation plan (SIP) means a plan developed by an authorized governing body, including States, local governments, and Indian-governing bodies, in a nonattainment area, as required under titles I & II of the Clean Air Act, and approved by the EPA as meeting these same requirements.

Stationary source means any building, structure, facility or installation, other than an area or mobile source, which emits or may emit any criteria air pollutant or precursor subject to regulation under the Act.

Statutory economic incentive program means any EIP submitted to the EPA as an implementation plan revision to comply with sections 182(g)(3), 182(g)(5), 187(d)(3), or 187(g) of the Act.

Surplus means, at a minimum, emissions reductions in excess of an established program baseline which are not required by SIP requirements or State regulations, relied upon in any applicable attainment plan or demonstration, or credited in any RFP or milestone demonstration, so as to prevent the double-counting of emissions reductions.

Transportation control measure (TCM) is any measure of the types listed in section 108(F) of the Act, or any measure in an applicable implementation plan directed toward reducing emissions of air pollutants from transportation sources by a reduction in vehicle use or changes in traffic conditions.

§51.492 State program election and submittal.

(a) *Extreme O_3 nonattainment areas.* (1) A State or authorized governing body for any extreme O_3 nonattainment area shall submit a plan revision to implement an EIP, in accordance with the requirements of this part, pursuant to section 182(g)(5) of the Act, if:

(i) A required milestone compliance demonstration is not submitted within the required period.

(ii) The Administrator determines that the area has not met any applicable milestone.

(2) The plan revision in paragraph (a)(1) of this section shall be submitted within 9 months after such failure or determination, and shall be sufficient, in combination with other elements of the SIP, to achieve the next milestone.

(b) *Serious CO nonattainment areas.* (1) A State or authorized governing body for any serious CO nonattainment area shall submit a plan revision to implement an EIP, in accordance with the requirements of this part, if:

(i) A milestone demonstration is not submitted within the required period, pursuant to section 187(d) of the Act.

(ii) The Administrator notifies the State, pursuant to section 187(d) of the Act, that a milestone has not been met.

(iii) The Administrator determines, pursuant to section 186(b)(2) of the Act that the NAAQS for CO has not been attained by the applicable date for that area. Such revision shall be submitted within 9 months after such failure or determination.

(2) Submittals made pursuant to paragraphs (b)(1) (i) and (ii) of this section shall be sufficient, together with a transportation control program, to achieve the specific annual reductions in CO emissions set forth in the implementation plan by the attainment date. Submittals made pursuant to paragraph (b)(1)(iii) of this section shall be adequate, in combination with other elements of the revised plan, to reduce the total tonnage of emissions of CO in the area by at least 5 percent per year in each year after approval of the plan revision and before attainment of the NAAQS for CO.

(c) *Serious and severe O_3 nonattainment areas.* If a State, for any serious or severe O_3 nonattainment area, elects to implement an EIP in the circumstances set out in section 182(g)(3) of the Act, the State shall submit a plan revision to implement the program in accordance with the requirements of this part. If the option to implement an EIP is elected, a plan revision shall be submitted within 12 months after the date required for election, and shall be sufficient, in combination with other elements of the SIP, to achieve the next milestone.

(d) *Any nonattainment or attainment area.* Any State may at any time submit a plan or plan revision to implement a discretionary EIP, in accordance with the requirements of this part, pursuant to sections 110(a)(2)(A) and 172(c)(6) and other applicable provisions of the Act concerning SIP submittals. The plan revision shall not interfere with any applicable requirement concerning attainment and RFP, or any other applicable requirements of the Act.

§ 51.493 State program requirements.

Economic incentive programs shall be State and federally enforceable, nondiscriminatory, and consistent with the timely attainment of NAAQS, all applicable RFP and visibility requirements, applicable PSD increments, and all other applicable requirements of the Act. Programs in nonattainment areas for which credit is taken in attainment and RFP demonstrations shall be designed to ensure that the effects of the program are quantifiable and permanent over the entire duration of the program, and that the credit taken is limited to that which is surplus. Statutory programs shall be designed to result in quantifiable, significant reductions in actual emissions. The EIP's shall include the following elements, as applicable:

(a) *Statement of goals and rationale.* This element shall include a clear statement as to the environmental problem being addressed, the intended environmental and economic goals of the program, and the rationale relating the incentive-based strategy to the program goals.

(1) The statement of goals must include the goal that the program will benefit both the environment and the regulated entities. The program shall be designed so as to meaningfully meet this goal either directly, through increased or more rapid emissions reductions beyond those that would be achieved through a traditional regulatory program, or, alternatively, through other approaches that will result in real environmental benefits. Such alternative approaches include, but are not limited to, improved administrative mechanisms, reduced administrative burdens on regulatory agencies, improved emissions inventories, and the adoption of emission caps which over time constrain or reduce growth-related emissions beyond traditional regulatory approaches.

(2) The incentive-based strategy shall be described in terms of one of the following three strategies:

(i) Emission-limiting strategies, which directly specify limits on total mass emissions, emission-related parameters (e.g., emission rates per unit of production, product content limits), or levels of emissions reductions relative to a program baseline that affected sources are required to meet, while providing flexibility to sources to reduce the cost of meeting program requirements.

(ii) Market-response strategies, which create one or more incentives for

affected sources to reduce emissions, without directly specifying limits on emissions or emission-related parameters that individual sources or even all sources in the aggregate are required to meet.

(iii) Directionally-sound strategies, for which adequate procedures to quantify emissions reductions are not defined.

(b) *Program scope.* (1) This element shall contain a clear definition of the sources affected by the program. This definition shall address:

(i) The extent to which the program is mandatory or voluntary for the affected sources.

(ii) Provisions, if any, by which sources that are not required to be in the program may voluntarily enter the program.

(iii) Provisions, if any, by which sources covered by the program may voluntarily leave the program.

(2) Any opt-in or opt-out provisions in paragraph (b)(1) of this section shall be designed to provide mechanisms by which such program changes are reflected in an area's attainment and RFP demonstrations, thus ensuring that there will not be an increase in the emissions inventory for the area caused by voluntary entry or exit from the program.

(3) The program scope shall be defined so as not to interfere with any other Federal requirements which apply to the affected sources.

(c) *Program baseline.* A program baseline shall be defined as a basis for projecting program results and, if applicable, for initializing the incentive mechanism (e.g., for marketable permits programs). The program baseline shall be consistent with, and adequately reflected in, the assumptions and inputs used to develop an area's RFP plans and attainment and maintenance demonstrations, as applicable. The State shall provide sufficient supporting information from the areawide emissions inventory and other sources to justify the baseline used in the EIP.

(1) For EIP's submitted in conjunction with, or subsequent to, the submission of any areawide progress plan due at the time of EIP submission (e.g., the 15 percent RFP plan and/or subsequent 3 percent plans) or an attainment demonstration, a State may exercise flexibility in setting a program baseline provided the program baseline is consistent with and reflected in all relevant progress plans or attainment demonstration. A flexible program baseline may be based on the lower of actual, allowable, or some other intermediate or lower level of emissions. For any EIP submitted prior to the submittal of an attainment demonstration, the State shall include the following with its EIP submittal:

(i) A commitment that its subsequent attainment demonstration and all future progress plans, if applicable, will be consistent with the EIP baseline.

(ii) A discussion of how the baseline will be integrated into the subsequent attainment demonstration, taking into account the potential that credit issued prior to the attainment demonstration may no longer be surplus relative to the attainment demonstration.

(2) Except as provided for in paragraph (c)(4) of this section, for EIP's submitted during a time period when any progress plans are required but not yet submitted (e.g., the 15 percent RFP plan and/or the subsequent 3 percent plans), the program baseline shall be based on the lower-of-actual-or-allowable emissions. In such cases, actual emissions shall be taken from the most appropriate inventory, such as the 1990 actual emission inventory (due for submission in November 1992), and allowable emissions are the lower of SIP-allowable emissions or the level of emissions consistent with source compliance with all Federal requirements related to attainment and maintenance of the NAAQS.

(3) For EIP's that are designed to implement new and/or previously existing RACT requirements through emissions trading and are submitted in conjunction with, or subsequent to, the submission of an associated RACT rule, a State may exercise flexibility in setting a program baseline provided the program baseline is consistent with and reflected in the associated RACT rule, and any applicable progress plans and attainment demonstrations.

(4) For EIP's that are designed to implement new and/or previously existing

RACT requirements through emissions trading and are submitted prior to the submission of a required RFP plan or attainment demonstration, States also have flexibility in determining the program baseline, provided the following conditions are met.

(i) For EIP's that implement new RACT requirements for previously unregulated source categories through emissions trading, the new RACT requirements must reflect, to the extent practicable, increased emissions reductions beyond those that would be achieved through a traditional RACT program.

(ii) For EIP's that impose new RACT requirements on previously unregulated sources in a previously regulated source category (e.g., RACT ''catch-up'' programs), the new incentive-based RACT rule shall, in the aggregate, yield reductions in actual emissions at least equivalent to that which would result from source-by-source compliance with the existing RACT limit for that source category.

(5) A program baseline for individual sources shall, as appropriate, be contained or incorporated by reference in federally-enforceable operating permits or a federally-enforceable SIP.

(6) An initial baseline for TCM's shall be calculated by establishing the pre-existing conditions in the areas of interest. This may include establishing to what extent TCM's have already been implemented, what average vehicle occupancy (AVO) levels have been achieved during peak and off-peak periods, what types of trips occur in the region, and what mode choices have been made in making these trips. In addition, the extent to which travel options are currently available within the region of interest shall be determined. These travel options may include, but are not limited to, the degree of dispersion of transit services, the current ridership rates, and the availability and usage of parking facilities.

(7) Information used in setting a program baseline shall be of sufficient quality to provide for at least as high a degree of accountability as currently exists for traditional control requirements for the categories of sources affected by the program.

(d) *Replicable emission quantification methods.* This program element, for programs other than those which are categorized as directionally-sound, shall include credible, workable, and replicable methods for projecting program results from affected sources and, where necessary, for quantifying emissions from individual sources subject to the EIP. Such methods, if used to determine credit taken in attainment, RFP, and maintenance demonstrations, as applicable, shall yield results which can be shown to have a level of certainty comparable to that for source-specific standards and traditional methods of control strategy development. Such methods include, as applicable, the following elements:

(1) Specification of quantification methods. This element shall specify the approach or the combination or range of approaches that are acceptable for each source category affected by the program. Acceptable approaches may include, but are not limited to:

(i) Test methods for the direct measurement of emissions, either continuously or periodically.

(ii) Calculation equations which are a function of process or control system parameters, ambient conditions, activity levels, and/or throughput or production rates.

(iii) Mass balance calculations which are a function of inventory, usage, and/or disposal records.

(iv) EPA-approved emission factors, where appropriate and adequate.

(v) Any combination of these approaches.

(2) Specification of averaging times.

(i) The averaging time for any specified mass emissions caps or emission rate limits shall be consistent with: attaining and maintaining all applicable NAAQS, meeting RFP requirements, and ensuring equivalency with all applicable RACT requirements.

(ii) If the averaging time for any specified VOC or NO_X mass emissions caps or emission rate limits for stationary sources (and for other sources, as appropriate) is longer than 24 hours, the State shall provide, in support of the SIP submittal, a statistical showing that the specified averaging time is consistent with attaining the O_3

NAAQS and satisfying RFP requirements, as applicable, on the basis of typical summer day emissions; and, if applicable, a statistical showing that the longer averaging time will produce emissions reductions that are equivalent on a daily basis to source-specific RACT requirements.

(3) Accounting for shutdowns and production curtailments. This accounting shall include provisions which ensure that:

(i) Emissions reductions associated with shutdowns and production curtailments are not double-counted in attainment or RFP demonstrations.

(ii) Any resultant ''shifting demand'' which increases emissions from other sources is accounted for in such demonstrations.

(4) Accounting for batch, seasonal, and cyclical operations. This accounting shall include provisions which ensure that the approaches used to account for such variable operations are consistent with attainment and RFP plans.

(5) Accounting for travel mode choice options, as appropriate, for TCM's. This accounting shall consider the factors or attributes of the different forms of travel modes (e.g., bus, ridesharing) which determine which type of travel an individual will choose. Such factors include, but are not limited to, time, cost, reliability, and convenience of the mode.

(e) *Source requirements.* This program element shall include all source-specific requirements that constitute compliance with the program. Such requirements shall be appropriate, readily ascertainable, and State and federally enforceable, including, as applicable:

(1) Emission limits.

(i) For programs that impose limits on total mass emissions, emission rates, or other emission-related parameter(s), there must be an appropriate tracking system so that a facility's limits are readily ascertainable at all times.

(ii) For emission-limiting EIP's that authorize RACT sources to meet their RACT requirements through RACT/non-RACT trading, such trading shall result in an exceptional environmental benefit. Demonstration of an exceptional environmental benefit shall require either the use of the statutory offset ratios for nonattainment areas as the determinant of the amount of emissions reductions that would be required from non-RACT sources generating credits for RACT sources or, alternatively, a trading ratio of 1.1 to 1, at a minimum, may be authorized, provided exceptional environmental benefits are otherwise demonstrated.

(2) Monitoring, recordkeeping, and reporting requirements.

(i) An EIP (or the SIP as a whole) must contain test methods and, where necessary, emission quantification methodologies, appropriate to the emission limits established in the SIP. EIP sources must be subject to clearly specified MRR requirements appropriate to the test methods and any applicable quantification methodologies, and consistent with the EPA's title V rules, where applicable. Such MRR requirements shall provide sufficiently reliable and timely information to determine compliance with emission limits and other applicable strategy-specific requirements, and to provide for State and Federal enforceability of such limits and requirements. Methods for MRR may include, but are not limited to:

(A) The continuous monitoring of mass emissions, emission rates, or process or control parameters.

(B) In situ or portable measurement devices to verify control system operating conditions.

(C) Periodic measurement of mass emissions or emission rates using reference test methods.

(D) Operation and maintenance procedures and/or other work practices designed to prevent, identify, or remedy noncomplying conditions.

(E) Manual or automated recordkeeping of material usage, inventories, throughput, production, or levels of required activities.

(F) Any combination of these methods. EIP's shall require that responsible parties at each facility in the EIP program certify reported information.

(ii) Procedures for determining required data, including the emissions contribution from affected sources, for

periods for which required data monitoring is not performed, data are otherwise missing, or data have been demonstrated to have been inaccurately determined.

(3) Any other applicable strategy-specific requirements.

(f) *Projected results and audit/reconciliation procedures.* (1) The SIP submittal shall include projections of the emissions reductions associated with the implementation of the program. These projected results shall be related to and consistent with the assumptions used to develop the area's attainment demonstration and maintenance plan, as applicable. For programs designed to produce emissions reductions creditable towards RFP milestones, projected emissions reductions shall be related to the RFP baseline and consistent with the area's RFP compliance demonstration. The State shall provide sufficient supporting information that shows how affected sources are or will be addressed in the emissions inventory, RFP plan, and attainment demonstration or maintenance plan, as applicable.

(i) For emission-limiting programs, the projected results shall be consistent with the reductions in mass emissions or emissions-related parameters specified in the program design.

(ii) For market-response programs, the projected results shall be based on market analyses relating levels of targeted emissions and/or emission-related activities to program design parameters.

(iii) For directionally-sound programs, the projected results may be descriptive and shall be consistent with the area's attainment demonstration or maintenance plan.

(2) Quantitative projected results shall be adjusted through the use of two uncertainty factors, as appropriate, to reflect uncertainties inherent in both the extent to which sources will comply with program requirements and the overall program design.

(i) Uncertainty resulting from incomplete compliance shall be addressed through the use of a rule compliance factor.

(ii) Programmatic uncertainty shall be addressed through the use of a program uncertainty factor. Any presumptive norms set by the EPA shall be used unless an adequate justification for an alternative factor is included in supporting information to be supplied with the SIP submittal. In the absence of any EPA-specified presumptive norms, the State shall provide an adequate justification for the selected factors as part of the supporting information to be supplied with the SIP submittal.

(3) Unless otherwise provided in program-specific guidance issued by the EPA, EIP's for which SIP credit is taken shall include audit procedures to evaluate program implementation and track program results in terms of both actual emissions reductions, and, to the extent practicable, cost savings relative to traditional regulatory program requirements realized during program implementation. Such audits shall be conducted at specified time intervals, not to exceed three years. The State shall provide timely post-audit reports to the EPA.

(i) For emission-limiting EIP's, the State shall commit to ensure the timely implementation of programmatic revisions or other measures which the State, in response to the audit, deems necessary for the successful operation of the program in the context of overall RFP and attainment requirements.

(ii) For market-response EIP's, reconciliation procedures that identify a range of appropriate actions or revisions to program requirements that will make up for any shortfall between credited results (i.e., projected results, as adjusted by the two uncertainty factors described above) and actual results obtained during program implementation shall be submitted together with the program audit provisions. Such measures must be federally enforceable, as appropriate, and automatically executing to the extent necessary to make up the shortfall within a specified period of time, consistent with relevant RFP and attainment requirements.

(g) *Implementation schedule.* The program shall contain a schedule for the adoption and implementation of all State commitments and source requirements included in the program design.

(h) *Administrative procedures.* The program shall contain a description of State commitments which are integral to the implementation of the program, and the administrative system to be used to implement the program, addressing the adequacy of the personnel, funding, and legislative authority.

(1) States shall furnish adequate documentation of existing legal authority and demonstrated administrative capacity to implement and enforce the provisions of the EIP.

(2) For programs which require private and/or public entities to establish emission-related economic incentives (e.g., programs requiring employers to exempt carpoolers/multiple occupancy vehicles from paying for parking), States shall furnish adequate documentation of State authority and administrative capacity to implement and enforce the underlying program.

(i) *Enforcement mechanisms.* The program shall contain a compliance instrument(s) for all program requirements, which is legally binding and State and federally enforceable. This program element shall also include a State enforcement program which defines violations, and specifies auditing and inspections plans and provisions for enforcement actions. The program shall contain effective penalties for noncompliance which preserve the level of deterrence in traditional programs. For all such programs, the manner of collection of penalties must be specified.

(1) Emission limit violations. (i) Programs imposing limits on mass emissions or emission rates that provide for extended averaging times and/or compliance on a multisource basis shall include procedures for determining the number of violations, the number of days of violation, and sources in violation, for statutory maximum penalty purposes, when the limits are exceeded. The State shall demonstrate that such procedures shall not lessen the incentive for source compliance as compared to a program applied on a source-by-source, daily basis.

(ii) Programs shall require plans for remedying noncompliance at any facility that exceeds a multisource emissions limit for a given averaging period. These plans shall be enforceable both federally and by the State.

(2) Violations of MRR requirements. The MRR requirements shall apply on a daily basis, as appropriate, and violations thereof shall be subject to State enforcement sanctions and to the Federal penalty of up to $25,000 for each day a violation occurs or continues. In addition, where the requisite scienter conditions are met, violations of such requirements shall be subject to the Act's criminal penalty sanctions of section 113(c)(2), which provides for fines and imprisonment of up to 2 years.

§ 51.494 Use of program revenues.

Any revenues generated from statutory EIP's shall be used by the State for any of the following:

(a) Providing incentives for achieving emissions reductions.

(b) Providing assistance for the development of innovative technologies for the control of O_3 air pollution and for the development of lower-polluting solvents and surface coatings. Such assistance shall not provide for the payment of more than 75 percent of either the costs of any project to develop such a technology or the costs of development of a lower-polluting solvent or surface coating.

(c) Funding the administrative costs of State programs under this Act. Not more than 50 percent of such revenues may be used for this purpose. The use of any revenues generated from discretionary EIP's shall not be constrained by the provisions of this part.

Subpart W—Determining Conformity of General Federal Actions to State or Federal Implementation Plans

SOURCE: 58 FR 63247, Nov. 30, 1993, unless otherwise noted.

§ 51.850 Prohibition.

(a) No department, agency or instrumentality of the Federal Government shall engage in, support in any way or provide financial assistance for, license or permit, or approve any activity which does not conform to an applicable implementation plan.

(b) A Federal agency must make a determination that a Federal action conforms to the applicable implementation plan in accordance with the requirements of this subpart before the action is taken.

(c) Paragraph (b) of this section does not include Federal actions where either:

(1) A National Environmental Policy Act (NEPA) analysis was completed as evidenced by a final environmental assessment (EA), environmental impact statement (EIS), or finding of no significant impact (FONSI) that was prepared prior to January 31, 1994;

(2) (i) Prior to January 31, 1994, an EA was commenced or a contract was awarded to develop the specific environmental analysis;

(ii) Sufficient environmental analysis is completed by March 15, 1994 so that the Federal agency may determine that the Federal action is in conformity with the specific requirements and the purposes of the applicable SIP pursuant to the agency's affirmative obligation under section 176(c) of the Clean Air Act (Act); and

(iii) A written determination of conformity under section 176(c) of the Act has been made by the Federal agency responsible for the Federal action by March 15, 1994.

(d) Notwithstanding any provision of this subpart, a determination that an action is in conformance with the applicable implementation plan does not exempt the action from any other requirements of the applicable implementation plan, the NEPA, or the Act.

§ 51.851 State implementation plan (SIP) revision.

(a) Each State must submit to the Environmental Protection Agency (EPA) a revision to its applicable implementation plan which contains criteria and procedures for assessing the conformity of Federal actions to the applicable implementation plan, consistent with this subpart. The State must submit the conformity provisions within 12 months after November 30, 1993 or within 12 months of an area's designation to nonattainment, whichever date is later.

(b) The Federal conformity rules under this subpart and 40 CFR part 93, in addition to any existing applicable State requirements, establish the conformity criteria and procedures necessary to meet the Act requirements until such time as the required conformity SIP revision is approved by EPA. A State's conformity provisions must contain criteria and procedures that are no less stringent than the requirements described in this subpart. A State may establish more stringent conformity criteria and procedures only if they apply equally to non-Federal as well as Federal entities. Following EPA approval of the State conformity provisions (or a portion thereof) in a revision to the applicable SIP, the approved (or approved portion of the) State criteria and procedures would govern conformity determinations and the Federal conformity regulations contained in 40 CFR part 93 would apply only for the portion, if any, of the State's conformity provisions that is not approved by EPA. In addition, any previously applicable SIP requirements relating to conformity remain enforceable until the State revises its SIP to specifically remove them from the SIP and that revision is approved by EPA.

§ 51.852 Definitions.

Terms used but not defined in this part shall have the meaning given them by the Act and EPA's regulations, (40 CFR chapter I), in that order of priority.

Affected Federal land manager means the Federal agency or the Federal official charged with direct responsibility for management of an area designated as Class I under the Act (42 U.S.C. 7472) that is located within 100 km of the proposed Federal action.

Applicable implementation plan or applicable SIP means the portion (or portions) of the SIP or most recent revision thereof, which has been approved under section 110 of the Act, or promulgated under section 110(c) of the Act (Federal implementation plan), or promulgated or approved pursuant to regulations promulgated under section 301(d) of the Act and which implements the relevant requirements of the Act.

Areawide air quality modeling analysis means an assessment on a scale that includes the entire nonattainment or

maintenance area which uses an air quality dispersion model to determine the effects of emissions on air quality.

Cause or contribute to a new violation means a Federal action that:

(1) Causes a new violation of a national ambient air quality standard (NAAQS) at a location in a nonattainment or maintenance area which would otherwise not be in violation of the standard during the future period in question if the Federal action were not taken; or

(2) Contributes, in conjunction with other reasonably foreseeable actions, to a new violation of a NAAQS at a location in a nonattainment or maintenance area in a manner that would increase the frequency or severity of the new violation.

Caused by, as used in the terms ''direct emissions'' and ''indirect emissions,'' means emissions that would not otherwise occur in the absence of the Federal action.

Criteria pollutant or standard means any pollutant for which there is established a NAAQS at 40 CFR part 50.

Direct emissions means those emissions of a criteria pollutant or its precursors that are caused or initiated by the Federal action and occur at the same time and place as the action.

Emergency means a situation where extremely quick action on the part of the Federal agencies involved is needed and where the timing of such Federal activities makes it impractical to meet the requirements of this subpart, such as natural disasters like hurricanes or earthquakes, civil disturbances such as terrorist acts, and military mobilizations.

Emissions budgets are those portions of the applicable SIP's projected emissions inventories that describe the levels of emissions (mobile, stationary, area, etc.) that provide for meeting reasonable further progress milestones, attainment, and/or maintenance for any criteria pollutant or its precursors.

Emissions offsets, for purposes of § 51.858, are emissions reductions which are quantifiable, consistent with the applicable SIP attainment and reasonable further progress demonstrations, surplus to reductions required by, and credited to, other applicable SIP provisions, enforceable at both the State and Federal levels, and permanent within the timeframe specified by the program.

Emissions that a Federal agency has a continuing program responsibility for means emissions that are specifically caused by an agency carrying out its authorities, and does not include emissions that occur due to subsequent activities, unless such activities are required by the Federal agency. Where an agency, in performing its normal program responsibilities, takes actions itself or imposes conditions that result in air pollutant emissions by a non-Federal entity taking subsequent actions, such emissions are covered by the meaning of a continuing program responsibility.

EPA means the Environmental Protection Agency.

Federal action means any activity engaged in by a department, agency, or instrumentality of the Federal government, or any activity that a department, agency or instrumentality of the Federal government supports in any way, provides financial assistance for, licenses, permits, or approves, other than activities related to transportation plans, programs, and projects developed, funded, or approved under title 23 U.S.C. or the Federal Transit Act (49 U.S.C. 1601 *et seq.*). Where the Federal action is a permit, license, or other approval for some aspect of a non-Federal undertaking, the relevant activity is the part, portion, or phase or the non-Federal undertaking that requires the Federal permit, license, or approval.

Federal agency means, for purposes of this subpart, a Federal department, agency, or instrumentality of the Federal government.

Increase the frequency or severity of any existing violation of any standard in any area means to cause a nonattainment area to exceed a standard more often or to cause a violation at a greater concentration than previously existed and/or would otherwise exist during the future period in question, if the project were not implemented.

Indirect emissions means those emissions of a criteria pollutant or its precursors that:

(1) Are caused by the Federal action, but may occur later in time and/or may

be farther removed in distance from the action itself but are still reasonably foreseeable; and

(2) The Federal agency can practicably control and will maintain control over due to a continuing program responsibility of the Federal agency.

Local air quality modeling analysis means an assessment of localized impacts on a scale smaller than the entire nonattainment or maintenance area, including, for example, congested roadway intersections and highways or transit terminals, which uses an air quality dispersion model to determine the effects of emissions on air quality.

Maintenance area means an area with a maintenance plan approved under section 175A of the Act.

Maintenance plan means a revision to the applicable SIP, meeting the requirements of section 175A of the Act.

Metropolitan Planning Organization (MPO) is that organization designated as being responsible, together with the State, for conducting the continuing, cooperative, and comprehensive planning process under 23 U.S.C. 134 and 49 U.S.C. 1607.

Milestone has the meaning given in sections 182(g)(1) and 189(c)(1) of the Act.

National ambient air quality standards (NAAQS) are those standards established pursuant to section 109 of the Act and include standards for carbon monoxide (CO), lead (Pb), nitrogen dioxide (NO_2), ozone, particulate matter (PM–10), and sulfur dioxide (SO_2).

NEPA is the National Environmental Policy Act of 1969, as amended (42 U.S.C. 4321 *et seq.*).

Nonattainment Area (NAA) means an area designated as nonattainment under section 107 of the Act and described in 40 CFR part 81.

Precursors of a criteria pollutant are:

(1) For ozone, nitrogen oxides (NO_X), unless an area is exempted from NO_X requirements under section 182(f) of the Act, and volatile organic compounds (VOC); and

(2) For PM–10, those pollutants described in the PM–10 nonattainment area applicable SIP as significant contributors to the PM–10 levels.

Reasonably foreseeable emissions are projected future indirect emissions that are identified at the time the conformity determination is made; the location of such emissions is known and the emissions are quantifiable, as described and documented by the Federal agency based on its own information and after reviewing any information presented to the Federal agency.

Regional water and/or wastewater projects include construction, operation, and maintenance of water or wastewater conveyances, water or wastewater treatment facilities, and water storage reservoirs which affect a large portion of a nonattainment or maintenance area.

Regionally significant action means a Federal action for which the direct and indirect emissions of any pollutant represent 10 percent or more of a nonattainment or maintenance area's emissions inventory for that pollutant.

Total of direct and indirect emissions means the sum of direct and indirect emissions increases and decreases caused by the Federal action; i.e., the ''net'' emissions considering all direct and indirect emissions. The portion of emissions which are exempt or presumed to conform under § 51.853, (c), (d), (e), or (f) are not included in the ''total of direct and indirect emissions.'' The ''total of direct and indirect emissions'' includes emissions of criteria pollutants and emissions of precursors of criteria pollutants.

§ 51.853 Applicability.

(a) Conformity determinations for Federal actions related to transportation plans, programs, and projects developed, funded, or approved under title 23 U.S.C. or the Federal Transit Act (49 U.S.C. 1601 *et seq.*) must meet the procedures and criteria of 40 CFR part 51, subpart T, in lieu of the procedures set forth in this subpart.

(b) For Federal actions not covered by paragraph (a) of this section, a conformity determination is required for each pollutant where the total of direct and indirect emissions in a nonattainment or maintenance area caused by a Federal action would equal or exceed any of the rates in paragraphs (b)(1) or (2) of this section.

(1) For purposes of paragraph (b) of this section, the following rates apply in nonattainment areas (NAAs):

	Tons/ year
Ozone (VOC's or NO_x):	
Serious NAA's	50
Severe NAA's	25
Extreme NAA's	10
Other ozone NAA's outside an ozone transport region	100
Marginal and moderate NAA's inside an ozone transport region:	
VOC	50
NO_x	100
Carbon monoxide: All NAA's	100
SO_2 or NO_2: All NAA's	100
PM–10:	
Moderate NAA's	100
Serious NAA's	70
Pb: All NAA's	25

(2) For purposes of paragraph (b) of this section, the following rates apply in maintenance areas:

	Tons/ year
Ozone (NO_x), SO_2 or NO_2: All maintenance areas	100
Ozone (VOC's):	
Maintenance areas inside an ozone transport region	50
Maintenance areas outside an ozone transport region	100
Carbon monoxide: All maintenance areas	100
PM–10: All maintenance areas	100
Pb: All maintenance areas	25

(c) The requirements of this subpart shall not apply to:

(1) Actions where the total of direct and indirect emissions are below the emissions levels specified in paragraph (b) of this section.

(2) The following actions which would result in no emissions increase or an increase in emissions that is clearly de minimis:

(i) Judicial and legislative proceedings.

(ii) Continuing and recurring activities such as permit renewals where activities conducted will be similar in scope and operation to activities currently being conducted.

(iii) Rulemaking and policy development and issuance.

(iv) Routine maintenance and repair activities, including repair and maintenance of administrative sites, roads, trails, and facilities.

(v) Civil and criminal enforcement activities, such as investigations, audits, inspections, examinations, prosecutions, and the training of law enforcement personnel.

(vi) Administrative actions such as personnel actions, organizational changes, debt management or collection, cash management, internal agency audits, program budget proposals, and matters relating to the administration and collection of taxes, duties and fees.

(vii) The routine, recurring transportation of materiel and personnel.

(viii) Routine movement of mobile assets, such as ships and aircraft, in home port reassignments and stations (when no new support facilities or personnel are required) to perform as operational groups and/or for repair or overhaul.

(ix) Maintenance dredging and debris disposal where no new depths are required, applicable permits are secured, and disposal will be at an approved disposal site.

(x) Actions, such as the following, with respect to existing structures, properties, facilities and lands where future activities conducted will be similar in scope and operation to activities currently being conducted at the existing structures, properties, facilities, and lands; for example, relocation of personnel, disposition of federally-owned existing structures, properties, facilities, and lands, rent subsidies, operation and maintenance cost subsidies, the exercise of receivership or conservatorship authority, assistance in purchasing structures, and the production of coins and currency.

(xi) The granting of leases, licenses such as for exports and trade, permits, and easements where activities conducted will be similar in scope and operation to activities currently being conducted.

(xii) Planning, studies, and provision of technical assistance. (xiii) Routine operation of facilities, mobile assets and equipment.

(xiv) Transfers of ownership, interests, and titles in land, facilities, and real and personal properties, regardless of the form or method of the transfer.

(xv) The designation of empowerment zones, enterprise communities, or viticultural areas.

(xvi) Actions by any of the Federal banking agencies or the Federal Reserve Banks, including actions regarding charters, applications, notices, licenses, the supervision or examination of depository institutions or depository institution holding companies, access to the discount window, or the provision of financial services to banking organizations or to any department, agency or instrumentality of the United States.

(xvii) Actions by the Board of Governors of the Federal Reserve System or any Federal Reserve Bank to effect monetary or exchange rate policy.

(xviii) Actions that implement a foreign affairs function of the United States.

(xix) Actions (or portions thereof) associated with transfers of land, facilities, title, and real properties through an enforceable contract or lease agreement where the delivery of the deed is required to occur promptly after a specific, reasonable condition is met, such as promptly after the land is certified as meeting the requirements of the Comprehensive Environmental Response, Compensation, and Liability Act (CERCLA), and where the Federal agency does not retain continuing authority to control emissions associated with the lands, facilities, title, or real properties.

(xx) Transfers of real property, including land, facilities, and related personal property from a Federal entity to another Federal entity and assignments of real property, including land, facilities, and related personal property from a Federal entity to another Federal entity for subsequent deeding to eligible applicants.

(xxi) Actions by the Department of the Treasury to effect fiscal policy and to exercise the borrowing authority of the United States.

(3) The following actions where the emissions are not reasonably foreseeable:

(i) Initial Outer Continental Shelf lease sales which are made on a broad scale and are followed by exploration and development plans on a project level.

(ii) Electric power marketing activities that involve the acquisition, sale and transmission of electric energy.

(4) Actions which implement a decision to conduct or carry out a conforming program such as prescribed burning actions which are consistent with a conforming land management plan.

(d) Notwithstanding the other requirements of this subpart, a conformity determination is not required for the following Federal actions (or portion thereof):

(1) The portion of an action that includes major new or modified stationary sources that require a permit under the new source review (NSR) program (section 173 of the Act) or the prevention of significant deterioration (PSD) program (title I, part C of the Act).

(2) Actions in response to emergencies or natural disasters such as hurricanes, earthquakes, etc., which are commenced on the order of hours or days after the emergency or disaster and, if applicable, which meet the requirements of paragraph (e) of this section.

(3) Research, investigations, studies, demonstrations, or training (other than those exempted under paragraph (c)(2) of this section), where no environmental detriment is incurred and/or, the particular action furthers air quality research, as determined by the State agency primarily responsible for the applicable SIP.

(4) Alteration and additions of existing structures as specifically required by new or existing applicable environmental legislation or environmental regulations (e.g., hush houses for aircraft engines and scrubbers for air emissions).

(5) Direct emissions from remedial and removal actions carried out under the Comprehensive Environmental Response, Compensation and Liability Act (CERCLA) and associated regulations to the extent such emissions either comply with the substantive requirements of the PSD/NSR permitting program or are exempted from other environmental regulation under the provisions of CERCLA and applicable regulations issued under CERCLA.

(e) Federal actions which are part of a continuing response to an emergency or disaster under paragraph (d)(2) of this section and which are to be taken more than 6 months after the commencement of the response to the

emergency or disaster under paragraph (d)(2) of this section are exempt from the requirements of this subpart only if:

(1) The Federal agency taking the actions makes a written determination that, for a specified period not to exceed an additional 6 months, it is impractical to prepare the conformity analyses which would otherwise be required and the actions cannot be delayed due to overriding concerns for public health and welfare, national security interests and foreign policy commitments; or

(2) For actions which are to be taken after those actions covered by paragraph (e)(1) of this section, the Federal agency makes a new determination as provided in paragraph (e)(1) of this section.

(f) Notwithstanding other requirements of this subpart, actions specified by individual Federal agencies that have met the criteria set forth in either paragraph (g)(1) or (g)(2) of this section and the procedures set forth in paragraph (h) of this section are presumed to conform, except as provided in paragraph (j) of this section.

(g) The Federal agency must meet the criteria for establishing activities that are presumed to conform by fulfilling the requirements set forth in either paragraph (g)(1) or (g)(2) of this section:

(1) The Federal agency must clearly demonstrate using methods consistent with this subpart that the total of direct and indirect emissions from the type of activities which would be presumed to conform would not:

(i) Cause or contribute to any new violation of any standard in any area;

(ii) Interfere with provisions in the applicable SIP for maintenance of any standard;

(iii) Increase the frequency or severity of any existing violation of any standard in any area; or

(iv) Delay timely attainment of any standard or any required interim emission reductions or other milestones in any area including, where applicable, emission levels specified in the applicable SIP for purposes of:

(A) A demonstration of reasonable further progress;

(B) A demonstration of attainment; or

(C) A maintenance plan; or

(2) The Federal agency must provide documentation that the total of direct and indirect emissions from such future actions would be below the emission rates for a conformity determination that are established in paragraph (b) of this section, based, for example, on similar actions taken over recent years.

(h) In addition to meeting the criteria for establishing exemptions set forth in paragraphs (g)(1) or (g)(2) of this section, the following procedures must also be complied with to presume that activities will conform:

(1) The Federal agency must identify through publication in the FEDERAL REGISTER its list of proposed activities that are presumed to conform and the basis for the presumptions;

(2) The Federal agency must notify the appropriate EPA Regional Office(s), State and local air quality agencies and, where applicable, the agency designated under section 174 of the Act and the MPO and provide at least 30 days for the public to comment on the list of proposed activities presumed to conform;

(3) The Federal agency must document its response to all the comments received and make the comments, response, and final list of activities available to the public upon request; and

(4) The Federal agency must publish the final list of such activities in the FEDERAL REGISTER.

(i) Notwithstanding the other requirements of this subpart, when the total of direct and indirect emissions of any pollutant from a Federal action does not equal or exceed the rates specified in paragraph (b) of this section, but represents 10 percent or more of a nonattainment or maintenance area's total emissions of that pollutant, the action is defined as a regionally significant action and the requirements of §51.850 and §§51.855 through 51.860 shall apply for the Federal action.

(j) Where an action otherwise presumed to conform under paragraph (f) of this section is a regionally significant action or does not in fact meet one of the criteria in paragraph (g)(1)

of this section, that action shall not be presumed to conform and the requirements of § 51.850 and §§ 51.855 through 51.860 shall apply for the Federal action.

(k) The provisions of this subpart shall apply in all nonattainment and maintenance areas.

§ 51.854 Conformity analysis.

Any Federal department, agency, or instrumentality of the Federal government taking an action subject to this subpart must make its own conformity determination consistent with the requirements of this subpart. In making its conformity determination, a Federal agency must consider comments from any interested parties. Where multiple Federal agencies have jurisdiction for various aspects of a project, a Federal agency may choose to adopt the analysis of another Federal agency or develop its own analysis in order to make its conformity determination.

§ 51.855 Reporting requirements.

(a) A Federal agency making a conformity determination under § 51.858 must provide to the appropriate EPA Regional Office(s), State and local air quality agencies and, where applicable, affected Federal land managers, the agency designated under section 174 of the Act and the MPO a 30 day notice which describes the proposed action and the Federal agency's draft conformity determination on the action.

(b) A Federal agency must notify the appropriate EPA Regional Office(s), State and local air quality agencies and, where applicable, affected Federal land managers, the agency designated under section 174 of the Clean Air Act and the MPO within 30 days after making a final conformity determination under § 51.858.

§ 51.856 Public participation.

(a) Upon request by any person regarding a specific Federal action, a Federal agency must make available for review its draft conformity determination under § 51.858 with supporting materials which describe the analytical methods and conclusions relied upon in making the applicability analysis and draft conformity determination.

(b) A Federal agency must make public its draft conformity determination under § 51.858 by placing a notice by prominent advertisement in a daily newspaper of general circulation in the area affected by the action and by providing 30 days for written public comment prior to taking any formal action on the draft determination. This comment period may be concurrent with any other public involvement, such as occurs in the NEPA process.

(c) A Federal agency must document its response to all the comments received on its draft conformity determination under § 51.858 and make the comments and responses available, upon request by any person regarding a specific Federal action, within 30 days of the final conformity determination.

(d) A Federal agency must make public its final conformity determination under § 51.858 for a Federal action by placing a notice by prominent advertisement in a daily newspaper of general circulation in the area affected by the action within 30 days of the final conformity determination.

§ 51.857 Frequency of conformity determinations.

(a) The conformity status of a Federal action automatically lapses 5 years from the date a final conformity determination is reported under § 51.855, unless the Federal action has been completed or a continuous program has been commenced to implement that Federal action within a reasonable time.

(b) Ongoing Federal activities at a given site showing continuous progress are not new actions and do not require periodic redeterminations so long as such activities are within the scope of the final conformity determination reported under § 51.855.

(c) If, after the conformity determination is made, the Federal action is changed so that there is an increase in the total of direct and indirect emissions above the levels in § 51.853(b), a new conformity determination is required.

§ 51.858 Criteria for determining conformity of general Federal actions.

(a) An action required under § 51.853 to have a conformity determination for

a specific pollutant, will be determined to conform to the applicable SIP if, for each pollutant that exceeds the rates in § 51.853(b), or otherwise requires a conformity determination due to the total of direct and indirect emissions from the action, the action meets the requirements of paragraph (c) of this section, and meets any of the following requirements:

(1) For any criteria pollutant, the total of direct and indirect emissions from the action are specifically identified and accounted for in the applicable SIP's attainment or maintenance demonstration;

(2) For ozone or nitrogen dioxide, the total of direct and indirect emissions from the action are fully offset within the same nonattainment or maintenance area through a revision to the applicable SIP or a similarly enforceable measure that effects emission reductions so that there is no net increase in emissions of that pollutant;

(3) For any criteria pollutant, except ozone and nitrogen dioxide, the total of direct and indirect emissions from the action meet the requirements:

(i) Specified in paragraph (b) of this section, based on areawide air quality modeling analysis and local air quality modeling analysis; or

(ii) Meet the requirements of paragraph (a)(5) of this section and, for local air quality modeling analysis, the requirement of paragraph (b) of this section;

(4) For CO or PM–10—

(i) Where the State agency primarily responsible for the applicable SIP determines that an areawide air quality modeling analysis is not needed, the total of direct and indirect emissions from the action meet the requirements specified in paragraph (b) of this section, based on local air quality modeling analysis; or

(ii) Where the State agency primarily responsible for the applicable SIP determines that an areawide air quality modeling analysis is appropriate and that a local air quality modeling analysis is not needed, the total of direct and indirect emissions from the action meet the requirements specified in paragraph (b) of this section, based on areawide modeling, or meet the requirements of paragraph (a)(5) of this section; or

(5) For ozone or nitrogen dioxide, and for purposes of paragraphs (a)(3)(ii) and (a)(4)(ii) of this section, each portion of the action or the action as a whole meets any of the following requirements:

(i) Where EPA has approved a revision to an area's attainment or maintenance demonstration after 1990 and the State makes a determination as provided in paragraph (a)(5)(i)(A) of this section or where the State makes a commitment as provided in paragraph (a)(5)(i)(B) of this section:

(A) The total of direct and indirect emissions from the action (or portion thereof) is determined and documented by the State agency primarily responsible for the applicable SIP to result in a level of emissions which, together with all other emissions in the nonattainment (or maintenance) area, would not exceed the emissions budgets specified in the applicable SIP;

(B) The total of direct and indirect emissions from the action (or portion thereof) is determined by the State agency responsible for the applicable SIP to result in a level of emissions which, together with all other emissions in the nonattainment (or maintenance) area, would exceed an emissions budget specified in the applicable SIP and the State Governor or the Governor's designee for SIP actions makes a written commitment to EPA which includes the following:

(*1*) A specific schedule for adoption and submittal of a revision to the SIP which would achieve the needed emission reductions prior to the time emissions from the Federal action would occur;

(*2*) Identification of specific measures for incorporation into the SIP which would result in a level of emissions which, together with all other emissions in the nonattainment or maintenance area, would not exceed any emissions budget specified in the applicable SIP;

(*3*) A demonstration that all existing applicable SIP requirements are being implemented in the area for the pollutants affected by the Federal action, and that local authority to implement

additional requirements has been fully pursued;

(*4*) A determination that the responsible Federal agencies have required all reasonable mitigation measures associated with their action; and

(*5*) Written documentation including all air quality analyses supporting the conformity determination;

(C) Where a Federal agency made a conformity determination based on a State commitment under paragraph (a)(5)(i)(B) of this section, such a State commitment is automatically deemed a call for a SIP revision by EPA under section 110(k)(5) of the Act, effective on the date of the Federal conformity determination and requiring response within 18 months or any shorter time within which the State commits to revise the applicable SIP;

(ii) The action (or portion thereof), as determined by the MPO, is specifically included in a current transportation plan and transportation improvement program which have been found to conform to the applicable SIP under 40 CFR part 51, subpart T, or 40 CFR part 93, subpart A;

(iii) The action (or portion thereof) fully offsets its emissions within the same nonattainment or maintenance area through a revision to the applicable SIP or an equally enforceable measure that effects emission reductions equal to or greater than the total of direct and indirect emissions from the action so that there is no net increase in emissions of that pollutant;

(iv) Where EPA has not approved a revision to the relevant SIP attainment or maintenance demonstration since 1990, the total of direct and indirect emissions from the action for the future years (described in § 51.859(d)) do not increase emissions with respect to the baseline emissions:

(A) The baseline emissions reflect the historical activity levels that occurred in the geographic area affected by the proposed Federal action during:

(*1*) Calendar year 1990;

(*2*) The calendar year that is the basis for the classification (or, where the classification is based on multiple years, the most representative year), if a classification is promulgated in 40 CFR part 81; or

(*3*) The year of the baseline inventory in the PM–10 applicable SIP;

(B) The baseline emissions are the total of direct and indirect emissions calculated for the future years (described in § 51.859(d)) using the historic activity levels (described in paragraph (a)(5)(iv)(A) of this section) and appropriate emission factors for the future years; or

(v) Where the action involves regional water and/or wastewater projects, such projects are sized to meet only the needs of population projections that are in the applicable SIP.

(b) The areawide and/or local air quality modeling analyses must:

(1) Meet the requirements in § 51.859; and

(2) Show that the action does not:

(i) Cause or contribute to any new violation of any standard in any area; or

(ii) Increase the frequency or severity of any existing violation of any standard in any area.

(c) Notwithstanding any other requirements of this section, an action subject to this subpart may not be determined to conform to the applicable SIP unless the total of direct and indirect emissions from the action is in compliance or consistent with all relevant requirements and milestones contained in the applicable SIP, such as elements identified as part of the reasonable further progress schedules, assumptions specified in the attainment or maintenance demonstration, prohibitions, numerical emission limits, and work practice requirements.

(d) Any analyses required under this section must be completed, and any mitigation requirements necessary for a finding of conformity must be identified before the determination of conformity is made.

§ 51.859 Procedures for conformity determinations of general Federal actions.

(a) The analyses required under this subpart must be based on the latest planning assumptions.

(1) All planning assumptions must be derived from the estimates of population, employment, travel, and congestion most recently approved by the

MPO, or other agency authorized to make such estimates, where available.

(2) Any revisions to these estimates used as part of the conformity determination, including projected shifts in geographic location or level of population, employment, travel, and congestion, must be approved by the MPO or other agency authorized to make such estimates for the urban area.

(b) The analyses required under this subpart must be based on the latest and most accurate emission estimation techniques available as described below, unless such techniques are inappropriate. If such techniques are inappropriate and written approval of the EPA Regional Administrator is obtained for any modification or substitution, they may be modified or another technique substituted on a case-by-case basis or, where appropriate, on a generic basis for a specific Federal agency program.

(1) For motor vehicle emissions, the most current version of the motor vehicle emissions model specified by EPA and available for use in the preparation or revision of SIPs in that State must be used for the conformity analysis as specified in paragraphs (b)(1) (i) and (ii) of this section:

(i) The EPA must publish in the FEDERAL REGISTER a notice of availability of any new motor vehicle emissions model; and

(ii) A grace period of three months shall apply during which the motor vehicle emissions model previously specified by EPA as the most current version may be used. Conformity analyses for which the analysis was begun during the grace period or no more than 3 years before the FEDERAL REGISTER notice of availability of the latest emission model may continue to use the previous version of the model specified by EPA.

(2) For non-motor vehicle sources, including stationary and area source emissions, the latest emission factors specified by EPA in the ''Compilation of Air Pollutant Emission Factors (AP–42)''[1] must be used for the conformity analysis unless more accurate emission data are available, such as actual stack test data from stationary sources which are part of the conformity analysis.

(c) The air quality modeling analyses required under this subpart must be based on the applicable air quality models, data bases, and other requirements specified in the most recent version of the ''Guideline on Air Quality Models (Revised)'' (1986), including supplements (EPA publication no. 450/2–78–027R)[2], unless:

(1) The guideline techniques are inappropriate, in which case the model may be modified or another model substituted on a case-by-case basis or, where appropriate, on a generic basis for a specific Federal agency program; and

(2) Written approval of the EPA Regional Administrator is obtained for any modification or substitution.

(d) The analyses required under this subpart, except §51.858(a)(1), must be based on the total of direct and indirect emissions from the action and must reflect emission scenarios that are expected to occur under each of the following cases:

(1) The Act mandated attainment year or, if applicable, the farthest year for which emissions are projected in the maintenance plan;

(2) The year during which the total of direct and indirect emissions from the action is expected to be the greatest on an annual basis; and

(3) any year for which the applicable SIP specifies an emissions budget.

§51.860 Mitigation of air quality impacts.

(a) Any measures that are intended to mitigate air quality impacts must be identified and the process for implementation and enforcement of such measures must be described, including an implementation schedule containing explicit timelines for implementation.

(b) Prior to determining that a Federal action is in conformity, the Federal agency making the conformity determination must obtain written commitments from the appropriate persons

[1] Copies may be obtained from the Technical Support Division of OAQPS, EPA, MD–14, Research Triangle Park, NC 27711.

[2] See footnote 1 at §51.859(b)(2).

or agencies to implement any mitigation measures which are identified as conditions for making conformity determinations.

(c) Persons or agencies voluntarily committing to mitigation measures to facilitate positive conformity determinations must comply with the obligations of such commitments.

(d) In instances where the Federal agency is licensing, permitting or otherwise approving the action of another governmental or private entity, approval by the Federal agency must be conditioned on the other entity meeting the mitigation measures set forth in the conformity determination.

(e) When necessary because of changed circumstances, mitigation measures may be modified so long as the new mitigation measures continue to support the conformity determination. Any proposed change in the mitigation measures is subject to the reporting requirements of §51.856 and the public participation requirements of §51.857.

(f) The implementation plan revision required in §51.851 shall provide that written commitments to mitigation measures must be obtained prior to a positive conformity determination and that such commitments must be fulfilled.

(g) After a State revises its SIP to adopt its general conformity rules and EPA approves that SIP revision, any agreements, including mitigation measures, necessary for a conformity determination will be both State and federally enforceable. Enforceability through the applicable SIP will apply to all persons who agree to mitigate direct and indirect emissions associated with a Federal action for a conformity determination.

APPENDICES A–K—[Reserved]

APPENDIX L TO PART 51—EXAMPLE REGULATIONS FOR PREVENTION OF AIR POLLUTION EMERGENCY EPISODES

The example regulations presented herein reflect generally recognized ways of preventing air pollution from reaching levels that would cause imminent and substantial endangerment to the health of persons. States are required under subpart H to have emergency episodes plans but they are not required to adopt the regulations presented herein.

1.0 *Air pollution emergency*. This regulation is designed to prevent the excessive buildup of air pollutants during air pollution episodes, thereby preventing the occurrence of an emergency due to the effects of these pollutants on the health of persons.

1.1 *Episode criteria*. Conditions justifying the proclamation of an air pollution alert, air pollution warning, or air pollution emergency shall be deemed to exist whenever the Director determines that the accumulation of air pollutants in any place is attaining or has attained levels which could, if such levels are sustained or exceeded, lead to a substantial threat to the health of persons. In making this determination, the Director will be guided by the following criteria:

(a) *Air Pollution Forecast*: An internal watch by the Department of Air Pollution Control shall be actuated by a National Weather Service advisory that Atmospheric Stagnation Advisory is in effect or the equivalent local forecast of stagnant atmospheric condition.

(b) *Alert*: The Alert level is that concentration of pollutants at which first stage control actions is to begin. An Alert will be declared when any one of the following levels is reached at any monitoring site:

SO_2—800 μg/m^3 (0.3 p.p.m.), 24-hour average.

PM_{10}—350 μg/m^3, 24-hour average.

CO—17 mg/m^3 (15 p.p.m.), 8-hour average.

Ozone (O_2)=400 μg/m^3 (0.2 ppm)-hour average.

NO_2–1130 μg/m^3 (0.6 p.p.m.), 1-hour average, 282 μg/m^3(0.15 p.p.m.), 24-hour average.

In addition to the levels listed for the above pollutants, meterological conditions are such that pollutant concentrations can be expected to remain at the above levels for twelve (12) or more hours or increase, or in the case of ozone, the situation is likely to reoccur within the next 24-hours unless control actions are taken.

(c) *Warning*: The warning level indicates that air quality is continuing to degrade and that additional control actions are necessary. A warning will be declared when any one of the following levels is reached at any monitoring site:

SO_2—1,600 μg/m^3 (0.6 p.p.m.), 24-hour average.

PM_{10}—420 μg/m^3, 24-hour average.

CO—34 mg/m^3 (30 p.p.m.), 8-hour average.

Ozone (O_3)—800 μg/m^3 (0.4 p.p.m.), 1-hour average.

NO_2—2,260 μg/m^3 (1.2 ppm)—1-hour average; 565μg/m^3 (0.3 ppm), 24-hour average.

In addition to the levels listed for the above pollutants, meterological conditions are such that pollutant concentrations can be expected to remain at the above levels for twelve (12) or more hours or increase, or in

the case of ozone, the situation is likely to reoccur within the next 24-hours unless control actions are taken.

(d) *Emergency*: The emergency level indicates that air quality is continuing to degrade toward a level of significant harm to the health of persons and that the most stringent control actions are necessary. An emergency will be declared when any one of the following levels is reached at any monitoring site:

SO_2—2,100 μg/m^3 (0.8 p.p.m.), 24-hour average.
PM_{10}—500 μg/m^3, 24-hour average.
CO—46 mg/m^3 (40 p.p.m.), 8-hour average.
Ozone (O_3)—1,000 μg/m^3 (0.5 p.p.m.), 1-hour average.
NO_2–3,000 μg/m^3 (1.6 ppm), 1-hour average; 750 μg/m^3 (0.4 ppm), 24-hour average.

In addition to the levels listed for the above pollutants, meterological conditions are such that pollutant concentrations can be expected to remain at the above levels for twelve (12) or more hours or increase, or in the case of ozone, the situation is likely to reoccur within the next 24-hours unless control actions are taken.

(e) *Termination*: Once declared, any status reached by application of these criteria will remain in effect until the criteria for that level are no longer met. At such time, the next lower status will be assumed.

1.2 *Emission reduction plans.* (a) Air Pollution Alert—When the Director declares an Air Pollution Alert, any person responsible for the operation of a source of air pollutants as set forth in Table I shall take all Air Pollution Alert actions as required for such source of air pollutants and shall put into effect the preplanned abatement strategy for an Air Pollution Alert.

(b) Air Pollution Warning—When the Director declares an Air Pollution Warning, any person responsible for the operation of a source of air pollutants as set forth in Table II shall take all Air Pollution Warning actions as required for such source of air pollutants and shall put into effect the preplanned abatement strategy for an Air Pollution Warning.

(c) Air Pollution Emergency—When the Director declares an Air Pollution Emergency, any person responsible for the operation of a source of air pollutants as described in Table III shall take all Air Pollution Emergency actions as required for such source of air pollutants and shall put into effect the preplanned abatement strategy for an Air Pollution Emergency.

(d) When the Director determines that a specified criteria level has been reached at one or more monitoring sites solely because of emissions from a limited number of sources, he shall notify such source(s) that the preplanned abatement strategies of Tables I, II, and III or the standby plans are required, insofar as it applies to such source(s), and shall be put into effect until the criteria of the specified level are no longer met.

1.3 *Preplanned abatement strategies,* (a) Any person responsible for the operation of a source of air pollutants as set forth in Tables I–III shall prepare standby plans for reducing the emission of air pollutants during periods of an Air Pollution Alert, Air Pollution Warning, and Air Pollution Emergency. Standby plans shall be designed to reduce or eliminate emissions of air pollutants in accordance with the objectives set forth in Tables I–III which are made a part of this section.

(b) Any person responsible for the operation of a source of air pollutants not set forth under section 1.3(a) shall, when requested by the Director in writing, prepare standby plans for reducing the emission of air pollutants during periods of an Air Pollution Alert, Air Pollution Warning, and Air Pollution Emergency. Standby plans shall be designed to reduce or eliminate emissions of air pollutants in accordance with the objectives set forth in Tables I–III.

(c) Standby plans as required under section 1.3(a) and (b) shall be in writing and identify the sources of air pollutants, the approximate amount of reduction of pollutants and a brief description of the manner in which the reduction will be achieved during an Air Pollution Alert, Air Pollution Warning, and Air Pollution Emergency.

(d) During a condition of Air Pollution Alert, Air Pollution Warning, and Air Pollution Emergency, standby plans as required by this section shall be made available on the premises to any person authorized to enforce the provisions of applicable rules and regulations.

(e) Standby plans as required by this section shall be submitted to the Director upon request within thirty (30) days of the receipt of such request; such standby plans shall be subject to review and approval by the Director. If, in the opinion of the Director, a standby plan does not effectively carry out the objectives as set forth in Table I–III, the Director may disapprove it, state his reason for disapproval and order the preparation of an amended standby plan within the time period specified in the order.

TABLE I—ABATEMENT STRATEGIES EMISSION REDUCTION PLANS

ALERT LEVEL

Part A. General

1. There shall be no open burning by any persons of tree waste, vegetation, refuse, or debris in any form.
2. The use of incinerators for the disposal of any form of solid waste shall be limited to the hours between 12 noon and 4 p.m.
3. Persons operating fuel-burning equipment which required boiler lancing or soot blowing shall perform such operations only between the hours of 12 noon and 4 p.m.
4. Persons operating motor vehicles should eliminate all unnecessary operations.

Part B. Source curtailment

Any person responsible for the operation of a source of air pollutants listed below shall take all required control actions for this Alert Level.

Source of air pollution	Control action
1. Coal or oil-fired electric power generating facilities	a. Substantial reduction by utilization of fuels having low ash and sulfur content. b. Maximum utilization of mid-day (12 noon to 4 p.m.) atmospheric turbulence for boiler lancing and soot blowing. c. Substantial reduction by diverting electric power generation to facilities outside of Alert Area.
2. Coal and oil-fired process steam generating facilities	a. Substantial reduction by utilization of fuels having low ash and sulfur content. b. Maximum utilization of mid-day (12 noon to 4 p.m.) atmospheric turbulence for boiler lancing and soot blowing. c. Substantial reduction of steam load demands consistent with continuing plant operations.
3. Manufacturing industries of the following classifications: Primary Metals Industry. Petroleum Refining Operations. Chemical Industries. Mineral Processing Industries. Paper and Allied Products. Grain Industry.	a. Substantial reduction of air pollutants from manufacturing operations by curtailing, postponing, or deferring production and all operations. b. Maximum reduction by deferring trade waste disposal operations which emit solid particles, gas vapors or malodorous substances. c. Maximum reduction of heat load demands for processing. d. Maximum utilization of mid-day (12 noon to 4 p.m.) atmospheric turbulence for boiler lancing and soot blowing.

TABLE II—EMISSION REDUCTION PLANS

WARNING LEVEL

Part A. General

1. There shall be no open burning by any persons of tree waste, vegetation, refuse, or debris in any form.
2. The use of incinerators for the disposal of any form of solid waste or liquid waste shall be prohibited.
3. Persons operating fuel-burning equipment which requires boiler lancing or soot blowing shall perform such operations only between the hours of 12 noon and 4 p.m.
4. Persons operating motor vehicles must reduce operations by the use of car pools and increased use of public transportation and elimination of unnecessary operation.

Part B. Source curtailment

Any person responsible for the operation of a source of air pollutants listed below shall take all required control actions for this Warning Level.

Source of air pollution	Control action
1. Coal or oil-fired process steam generating facilities	a. Maximum reduction by utilization of fuels having lowest ash and sulfur content. b. Maximum utilization of mid-day (12 noon to 4 p.m.) atmospheric turbulence for boiler lancing and soot blowing. c. Maximum reduction by diverting electric power generation to facilities outside of Warning Area.
2. Oil and oil-fired process steam generating facilities	a. Maximum reduction by utilization of fuels having the lowest available ash and sulfur content. b. Maximum utilization of mid-day (12 noon to 4 p.m.) atmospheric turbulence for boiler lancing and soot blowing. c. Making ready for use a plan of action to be taken if an emergency develops.

Source of air pollution	Control action
3. Manufacturing industries which require considerable lead time for shut-down including the following classifications: Petroleum Refining. Chemical Industries. Primary Metals Industries. Glass Industries. Paper and Allied Products.	a. Maximum reduction of air contaminants from manufacturing operations by, if necessary, assuming reasonable economic hardships by postponing production and allied operation. b. Maximum reduction by deferring trade waste disposal operations which emit solid particles, gases, vapors or malodorous substances. c. Maximum reduction of heat load demands for processing. d. Maximum utilization of mid-day (12 noon to 4 p.m.) atmospheric turbulence for boiler lancing or soot blowing.
4. Manufacturing industries require relatively short lead times for shut-down including the following classifications: Primary Metals Industries. Chemical Industries. Mineral Processing Industries. Grain Industry.	a. Elimination of air pollutants from manufacturing operations by ceasing, curtailing, postponing or deferring production and allied operations to the extent possible without causing injury to persons or damage to equipment. b. Elimination of air pollutants from trade waste disposal processes which emit solid particles, gases, vapors or malodorous substances. c. Maximum reduction of heat load demands for processing. d. Maximum utilization of mid-day (12 noon to 4 p.m.) atmospheric turbulence for boiler lancing or soot blowing.

TABLE III—EMISSION REDUCTION PLANS

EMERGENCY LEVEL

Part A. General

1. There shall be no open burning by any persons of tree waste, vegetation, refuse, or debris in any form.

2. The use of incinerators for the disposal of any form of solid or liquid waste shall be prohibited.

3. All places of employment described below shall immediately cease operations.

a. Mining and quarrying of nonmetallic minerals.

b. All construction work except that which must proceed to avoid emergent physical harm.

c. All manufacturing establishments except those required to have in force an air pollution emergency plan.

d. All wholesale trade establishments; i.e., places of business primarily engaged in selling merchandise to retailers, or industrial, commercial, institutional or professional users, or to other wholesalers, or acting as agents in buying merchandise for or selling merchandise to such persons or companies, except those engaged in the distribution of drugs, surgical supplies and food.

e. All offices of local, county and State government including authorities, joint meetings, and other public bodies excepting such agencies which are determined by the chief administrative officer of local, county, or State government, authorities, joint meetings and other public bodies to be vital for public safety and welfare and the enforcement of the provisions of this order.

f. All retail trade establishments except pharmacies, surgical supply distributors, and stores primarily engaged in the sale of food.

g. Banks, credit agencies other than banks, securities and commodities brokers, dealers, exchanges and services; offices of insurance carriers, agents and brokers, real estate offices.

h. Wholesale and retail laundries, laundry services and cleaning and dyeing establishments; photographic studios; beauty shops, barber shops, shoe repair shops.

i. Advertising offices; consumer credit reporting, adjustment and collection agencies; duplicating, addressing, blueprinting; photocopying, mailing, mailing list and stenographic services; equipment rental services, commercial testing laboratories.

j. Automobile repair, automobile services, garages.

k. Establishments rendering amusement and recreational services including motion picture theaters.

l. Elementary and secondary schools, colleges, universities, professional schools, junior colleges, vocational schools, and public and private libraries.

4. All commercial and manufacturing establishments not included in this order will institute such actions as will result in maximum reduction of air pollutants from their operation by ceasing, curtailing, or postponing operations which emit air pollutants to the extent possible without causing injury to persons or damage to equipment.

5. The use of motor vehicles is prohibited except in emergencies with the approval of local or State police.

Part B. Source curtailment

Any person responsible for the operation of a source of air pollutants listed below shall take all required control actions for this Emergency Level.

Source of air pollution	Control action
1. Coal or oil-fired electric power generating facilities	a. Maximum reduction by utilization of fuels having lowest ash and sulfur content. b. Maximum utilization of mid-day (12 noon to 4 p.m.) atmospheric turbulence for boiler lancing or soot blowing. c. Maximum reduction by diverting electric power generation to facilities outside of Emergency Area.
2. Coal and oil-fired process steam generating facilities	a. Maximum reduction by reducing heat and steam demands to absolute necessities consistent with preventing equipment damage. b. Maximum utilization of mid-day (12 noon to 4 p.m.) atmospheric turbulence for boiler lancing and soot blowing. c. Taking the action called for in the emergency plan.
3. Manufacturing industries of the following classifications: Primary Metals Industries. Petroleum Refining. Chemical Industries. Mineral Processing Industries. Grain Industry. Paper and Allied Products.	a. Elimination of air pollutants from manufacturing operations by ceasing, curtailing, postponing or deferring production and allied operations to the extent possible without causing injury to persons or damage to equipment. b. Elimination of air pollutants from trade waste disposal processes which emit solid particles, gases, vapors or malodorous substances. c. Maximum reduction of heat load demands for processing. d. Maximum utilization of mid-day (12 noon to 4 p.m.) atmospheric turbulence for boiler lancing or soot blowing.

(Secs. 110, 301(a), 313, 319, Clean Air Act (42 U.S.C. 7410, 7601(a), 7613, 7619))

[36 FR 22398, Nov. 25, 1971; 36 FR 24002, Dec. 17, 1971, as amended at 37 FR 26312, Dec. 9, 1972; 40 FR 36333, Aug. 20, 1975; 41 FR 35676, Aug. 24, 1976; 44 FR 27570, May 10, 1979; 51 FR 40675, Nov. 7, 1986; 52 FR 24714, July 1, 1987]

APPENDIX M TO PART 51—RECOMMENDED TEST METHODS FOR STATE IMPLEMENTATION PLANS

Method 201—Determination of PM_{10} Emissions (Exhaust Gas Recycle Procedure).

Method 201A—Determination of PM_{10} Emissions (Constant Sampling Rate Procedure).

Method 202—Determination of Condensible Particulate Emissions From Stationary Sources

Method 205—Verification of Gas Dilution Systems for Field Instrument Calibrations

Presented herein are recommended test methods for measuring air pollutantemanating from an emission source. They are provided for States to use in their plans to meet the requirements of subpart K—Source Surveillance.

The State may also choose to adopt other methods to meet the requirements of subpart K of this part, subject to the normal plan review process.

The State may also meet the requirements of subpart K of this part by adopting, again subject to the normal plan review process, any of the relevant methods in appendix A to 40 CFR part 60.

METHOD 201—DETERMINATION OF PM_{10} EMISSIONS

(Exhaust Gas Recycle Procedure)

1. Applicability and Principle

1.1 Applicability. This method applies to the in-stack measurement of particulate matter (PM) emissions equal to or less than an aerodynamic diameter of nominally 10 µm (PM_{10}) from stationary sources. The EPA recognizes that condensible emissions not collected by an in-stack method are also PM_{10}, and that emissions that contribute to ambient PM_{10} levels are the sum of condensible emissions and emissions measured by an in-stack PM_{10} method, such as this method or Method 201A. Therefore, for establishing source contributions to ambient levels of PM_{10}, such as for emission inventory purposes, EPA suggests that source PM_{10} measurement include both in-stack PM_{10} and condensible emissions. Condensible missions may be measured by an impinger analysis in combination with this method.

1.2 Principle. A gas sample is isokinetically extracted from the source. An in-stack cyclone is used to separate PM greater than PM_{10}, and an in-stack glass fiber filter is used to collect the PM_{10}. To maintain isokinetic flow rate conditions at the tip of the probe and a constant flow rate through the cyclone, a clean, dried portion of the sample gas at stack temperature is recycled into the nozzle. The particulate mass is determined gravimetrically after removal of uncombined water.

2. Apparatus

NOTE: Method 5 as cited in this method refers to the method in 40 CFR part 60, appendix A.

2.1 Sampling Train. A schematic of the exhaust of the exhaust gas recycle (EGR) train is shown in Figure 1 of this method.

2.1.1 Nozzle with Recycle Attachment. Stainless steel (316 or equivalent) with a sharp tapered leading edge, and recycle attachment welded directly on the side of the nozzle (see schematic in Figure 2 of this method). The angle of the taper shall be on the outside. Use only straight sampling nozzles. ''Gooseneck'' or other nozzle extensions designed to turn the sample gas flow 90°, as in Method 5 are not acceptable. Locate a thermocouple in the recycle attachment to measure the temperature of the recycle gas as shown in Figure 3 of this method. The recycle attachment shall be made of stainless steel and shall be connected to the probe and nozzle with stainless steel fittings. Two nozzle sizes, e.g., 0.125 and 0.160 in., should be available to allow isokinetic sampling to be conducted over a range of flow rates. Calibrate each nozzle as described in Method 5, Section 5.1.

2.1.2 PM_{10} Sizer. Cyclone, meeting the specifications in Section 5.7 of this method.

2.1.3 Filter Holder. 63mm, stainless steel. An Andersen filter, part number SE274, has been found to be acceptable for the in-stack filter.

NOTE: Mention of trade names or specific products does not constitute endorsement by the Environmental Protection Agency.

2.1.4 Pitot Tube. Same as in Method 5, Section 2.1.3. Attach the pitot to the pitot lines with stainless steel fittings and to the cyclone in a configuration similar to that shown in Figure 3 of this method. The pitot lines shall be made of heat resistant material and attached to the probe with stainless steel fittings.

2.1.5 EGR Probe. Stainless steel, 15.9-mm (⅝-in.) ID tubing with a probe liner, stainless steel 9.53-mm (⅜-in.) ID stainless steel recycle tubing, two 6.35-mm (¼-in.) ID stainless steel tubing for the pitot tube extensions, three thermocouple leads, and one power lead, all contained by stainless steel tubing with a diameter of approximately 51 mm (2.0 in.). Design considerations should include minimum weight construction materials sufficient for probe structural strength. Wrap the sample and recycle tubes with a heating tape to heat the sample and recycle gases to stack temperature.

2.1.6 Condenser. Same as in Method 5, Section 2.1.7.

2.1.7 Umbilical Connector. Flexible tubing with thermocouple and power leads of sufficient length to connect probe to meter and flow control console.

2.1.8 Vacuum Pump. Leak-tight, oil-less, noncontaminating, with an absolute filter, ''HEPA'' type, at the pump exit. A Gast Model 0522–V103 G18DX pump has been found to be satisfactory.

2.1.9 Meter and Flow Control Console. System consisting of a dry gas meter and calibrated orifice for measuring sample flow rate and capable of measuring volume to ±2 percent, calibrated laminar flow elements (LFE's) or equivalent for measuring total and sample flow rates, probe heater control, and manometers and magnehelic gauges (as shown in Figures 4 and 5 of this method), or equivalent. Temperatures needed for calculations include stack, recycle, probe, dry gas meter, filter, and total flow. Flow measurements include velocity head (Δp), orifice differential pressure (ΔH), total flow, recycle flow, and total back-pressure through the system.

2.1.10 Barometer. Same as in Method 5, Section 2.1.9.

2.1.11 Rubber Tubing. 6.35-mm (¼-in.) ID flexible rubber tubing.

2.2 Sample Recovery.

2.2.1 Nozzle, Cyclone, and Filter Holder Brushes. Nylon bristle brushes property sized and shaped for cleaning the nozzle, cyclone, filter holder, and probe or probe liner, with stainless steel wire shafts and handles.

2.2.2 Wash Bottles, Glass Sample Storage Containers, Petri Dishes, Graduated Cylinder and Balance, Plastic Storage Containers, and Funnels. Same as Method 5, Sections 2.2.2 through 2.2.6 and 2.2.8, respectively.

2.3 Analysis. Same as in Method 5, Section 2.3.

3. Reagents

The reagents used in sampling, sample recovery, and analysis are the same as that specified in Method 5, Sections 3.1, 3.2, and 3.3, respectively.

4. Procedure

4.1 Sampling. The complexity of this method is such that, in order to obtain reliable results, testers should be trained and experienced with the test procedures.

4.1.1 Pretest Preparation. Same as in Method 5, Section 4.1.1.

4.1.2 Preliminary Determinations. Same as Method 5, Section 4.1.2, except use the directions on nozzle size selection in this section. Use of the EGR method may require a minimum sampling port diameter of 0.2 m (6 in.). Also, the required maximum number of sample traverse points at any location shall be 12.

4.1.2.1 The cyclone and filter holder must be in-stack or at stack temperature during sampling. The blockage effects of the EGR sampling assembly will be minimal if the cross-sectional area of the sampling assembly is 3 percent or less of the cross-sectional area of the duct and a pitot coefficient of 0.84 may be assigned to the pitot. If the cross-sectional area of the assembly is greater than 3 percent of the cross-sectional area of

the duct, then either determine the pitot coefficient at sampling conditions or use a standard pitot with a known coefficient in a configuration with the EGR sampling assembly such that flow disturbances are minimized.

4.1.2.2 Construct a setup of pressure drops for various Δp's and temperatures. A computer is useful for these calculations. An example of the output of the EGR setup program is shown in Figure 6 of this method, and directions on its use are in section 4.1.5.2 of this method. Computer programs, written in IBM BASIC computer language, to do these types of setup and reduction calculations for the EGR procedure, are available through the National Technical Information Services (NTIS), Accession number PB90–500000, 5285 Port Royal Road, Springfield, VA 22161.

4.1.2.3 The EGR setup program allows the tester to select the nozzle size based on anticipated average stack conditions and prints a setup sheet for field use. The amount of recycle through the nozzle should be between 10 and 80 percent. Inputs for the EGR setup program are stack temperature (minimum, maximum, and average), stack velocity (minimum, maximum, and average), atmospheric pressure, stack static pressure, meter box temperature, stack moisture, percent 0_2, and percent CO_2 in the stack gas, pitot coefficient (C_p), orifice $\Delta H_@$, flow rate measurement calibration values [slope (m) and y-intercept (b) of the calibration curve], and the number of nozzles available and their diameters.

4.1.2.4 A less rigorous calculation for the setup sheet can be done manually using the equations on the example worksheets in Figures 7, 8, and 9 of this method, or by a Hewlett-Packard HP41 calculator using the program provided in appendix D of the EGR operators manual, entitled *Applications Guide for Source PM_{10} Exhaust Gas Recycle Sampling System*. This calculation uses an approximation of the total flow rate and agrees within 1 percent of the exact solution for pressure drops at stack temperatures from 38 to 260 °C (100 to 500 °F) and stack moisture up to 50 percent. Also, the example worksheets use a constant stack temperature in the calculation, ingoring the complicated temperature dependence from all three pressure drop equations. Errors for this at stack temperatures ±28 °C (±50 °F) of the temperature used in the setup calculations are within 5 percent for flow rate and within 5 percent for cyclone cut size.

4.1.2.5 The pressure upstream of the LFE's is assumed to be constant at 0.6 in. Hg in the EGR setup calculations.

4.1.2.6 The setup sheet constructed using this procedure shall be similar to Figure 6 of this method. Inputs needed for the calculation are the same as for the setup computer except that stack velocities are not needed.

4.1.3 Preparation of Collection Train. Same as in Method 5, Section 4.1.3, except use the following directions to set up the train.

4.1.3.1 Assemble the EGR sampling device, and attach it to probe as shown in Figure 3 of this method. If stack temperatures exceed 260 °C (500 °F), then assemble the EGR cyclone without the O-ring and reduce the vacuum requirement to 130 mm Hg (5.0 in. Hg) in the leak-check procedure in Section 4.1.4.3.2 of this method.

4.1.3.2 Connect the proble directly to the filter holder and condenser as in Method 5. Connect the condenser and probe to the meter and flow control console with the umbilical connector. Plug in the pump and attach pump lines to the meter and flow control console.

4.1.4 Leak-Check Procedure. The leak-check for the EGR Method consists of two parts: the sample-side and the recycle-side. The sample-side leak-check is required at the beginning of the run with the cyclone attached, and after the run with the cyclone removed. The cyclone is removed before the post-test leak-check to prevent any disturbance of the collected sample prior to analysis. The recycle-side leak-check tests the leak tight integrity of the recycle components and is required prior to the first test run and after each shipment.

4.1.4.1 Pretest Leak-Check. A pretest leak-check of the entire sample-side, including the cyclone and nozzle, is required. Use the leak-check procedure in Section 4.1.4.3 of this method to conduct a pretest leak-check.

4.1.4.2 Leak-Checks During Sample Run. Same as in Method 5, Section 4.1.4.1.

4.1.4.3 Post-Test Leak-Check. A leak-check is required at the conclusion of each sampling run. Remove the cyclone before the leak-check to prevent the vacuum created by the cooling of the probe from disturbing the collected sample and use the following procedure to conduct a post-test leak-check.

4.1.4.3.1 The sample-side leak-check is performed as follows: After removing the cyclone, seal the probe with a leak-tight stopper. Before starting pump, close the coarse total valve and both recycle valves, and open completely the sample back pressure valve and the fine total valve. After turning the pump on, partially open the coarse total valve slowly to prevent a surge in the manometer. Adjust the vacuum to at least 381 mm Hg (15.0 in. Hg) with the fine total valve. If the desired vacuum is exceeded, either leak-check at this higher vacuum or end the leak-check as shown below and start over.

CAUTION: Do not decrease the vacuum with any of the valves. This may cause a rupture of the filter.

NOTE: A lower vacuum may be used, provided that it is not exceeded during the test.

4.1.4.3.2 Leak rates in excess of 0.00057 m^3/min (0.020 ft^3/min) are unacceptable. If the leak rate is too high, void the sampling run.

4.1.4.3.3 To complete the leak-check, slowly remove the stopper from the nozzle until the vacuum is near zero, then immediately turn off the pump. This procedure sequence prevents a pressure surge in the manometer fluid and rupture of the filter.

4.1.4.3.4 The recycle-side leak-check is performed as follows: Close the coarse and fine total valves and sample back pressure valve. Plug the sample inlet at the meter box. Turn on the power and the pump, close the recycle valves, and open the total flow valves. Adjust the total flow fine adjust valve until a vacuum of 25 inches of mercury is achieved. If the desired vacuum is exceeded, either leak-check at this higher vacuum, or end the leak-check and start over. Minimum acceptable leak rates are the same as for the sample-side. If the leak rate is too high, void the sampling run.

4.1.5 EGR Train Operation. Same as in Method 5, Section 4.1.5, except omit references to nomographs and recommendations about changing the filter assembly during a run.

4.1.5.1 Record the data required on a data sheet such as the one shown in Figure 10 of this method. Make periodic checks of the manometer level and zero to ensure correct ΔH and Δp values. An acceptable procedure for checking the zero is to equalize the pressure at both ends of the manometer by pulling off the tubing, allowing the fluid to equilibrate and, if necessary, to re-zero. Maintain the probe temperature to within 11 °C (20 °F) of stack temperature.

4.1.5.2 The procedure for using the example EGR setup sheet is as follows: Obtain a stack velocity reading from the pitot manometer (Δp), and find this value on the ordinate axis of the setup sheet. Find the stack temperature on the abscissa. Where these two values intersect are the differential pressures necessary to achieve isokineticity and 10 µm cut size (interpolation may be necessary).

4.1.5.3 The top three numbers are differential pressures (in. H_2O), and the bottom number is the percent recycle at these flow settings. Adjust the total flow rate valves, coarse and fine, to the sample value (ΔH) on the setup sheet, and the recycle flow rate valves, coarse and fine, to the recycle flow on the setup sheet.

4.1.5.4 For startup of the EGR sample train, the following procedure is recommended. Preheat the cyclone in the stack for 30 minutes. Close both the sample and recycle coarse valves. Open the fine total, fine recycle, and sample back pressure valves halfway. Ensure that the nozzle is properly aligned with the sample stream. After noting the Δp and stack temperature, select the appropriate ΔH and recycle from the EGR setup sheet. Start the pump and timing device simultaneously. Immediately open both the coarse total and the coarse recycle valves slowly to obtain the approximate desired values. Adjust both the fine total and the fine recycle valves to achieve more precisely the desired values. In the EGR flow system, adjustment of either valve will result in a change in both total and recycle flow rates, and a slight iteration between the total and recycle valves may be necessary. Because the sample back pressure valve controls the total flow rate through the system, it may be necessary to adjust this valve in order to obtain the correct flow rate.

NOTE: Isokinetic sampling and proper operation of the cyclone are not achieved unless the correct ΔH and recycle flow rates are maintained.

4.1.5.5 During the test run, monitor the probe and filter temperatures periodically, and make adjustments as necessary to maintain the desired temperatures. If the sample loading is high, the filter may begin to blind or the cyclone may clog. The filter or the cyclone may be replaced during the sample run. Before changing the filter or cyclone, conduct a leak-check (Section 4.1.4.2 of this method). The total particulate mass shall be the sum of all cyclone and the filter catch during the run. Monitor stack temperature and Δp periodically, and make the necessary adjustments in sampling and recycle flow rates to maintain isokinetic sampling and the proper flow rate through the cyclone. At the end of the run, turn off the pump, close the coarse total valve, and record the final dry gas meter reading. Remove the probe from the stack, and conduct a post-test leak-check as outlined in Section 4.1.4.3 of this method.

4.2 Sample Recovery. Allow the probe to cool. When the probe can be safely handled, wipe off all external PM adhering to the outside of the nozzle, cyclone, and nozzle attachment, and place a cap over the nozzle to prevent losing or gaining PM. Do not cap the nozzle tip tightly while the sampling train is cooling, as this action would create a vacuum in the filter holder. Disconnect the probe from the umbilical connector, and take the probe to the cleanup site. Sample recovery should be conducted in a dry indoor area or, if outside, in an area protected from wind and free of dust. Cap the ends of the impingers and carry them to the cleanup site. Inspect the components of the train prior to and during disassembly to note any abnormal conditions. Disconnect the pitot from the cyclone. Remove the cyclone from the probe. Recover the sample as follows:

4.2.1 *Container Number 1* (Filter). The recovery shall be the same as that for Container Number 1 in Method 5, Section 4.2.

4.2.2 *Container Number 2* (Cyclone or Large PM Catch). The cyclone must be disassembled and the nozzle removed in order to recover the large PM catch. Quantitatively recover the PM from the interior surfaces of the nozzle and the cyclone, excluding the ''turn around'' cup and the interior surfaces of the exit tube. The recovery shall be the same as that for Container Number 2 in Method 5, Section 4.2.

4.2.3 *Container Number 3* (PM_{10}). Quantitatively recover the PM from all of the surfaces from cyclone exit to the front half of the in-stack filter holder, including the ''turn around'' cup and the interior of the exit tube. The recovery shall be the same as that for Container Number 2 in Method 5, Section 4.2.

4.2.4 *Container Number 4* (Silica Gel). Same as that for Container Number 3 in Method 5, Section 4.2.

4.2.5 *Impinger Water*. Same as in Method 5, Section 4.2, under ''Impinger Water.''

4.3 Analysis. Same as in Method 5, Section 4.3, except handle EGR Container Numbers 1 and 2 like Container Number 1 in Method 5, EGR Container Numbers 3, 4, and 5 like Container Number 3 in Method 5, and EGR Container Number 6 like Container Number 3 in Method 5. Use Figure 11 of this method to record the weights of PM collected.

4.4 Quality Control Procedures. Same as in Method 5, Section 4.4.

4.5 PM_{10} Emission Calculation and Acceptability of Results. Use the EGR reduction program or the procedures in section 6 of this method to calculate PM_{10} emissions and the criteria in section 6.7 of this method to determine the acceptability of the results.

5. Calibration

Maintain an accurate laboratory log of all calibrations.

5.1 Probe Nozzle. Same as in Method 5, Section 5.1.

5.2 Pitot Tube. Same as in Method 5, Section 5.2.

5.3 Meter and Flow Control Console.

5.3.1 Dry Gas Meter. Same as in Method 5, Section 5.3.

5.3.2 LFE Gauges. Calibrate the recycle, total, and inlet total LFE gauges with a manometer. Read and record flow rates at 10, 50, and 90 percent of full scale on the total and recycle pressure gauges. Read and record flow rates at 10, 20, and 30 percent of full scale on the inlet total LFE pressure gauge. Record the total and recycle readings to the nearest 0.3 mm (0.01 in.). Record the inlet total LFE readings to the nearest 3 mm (0.1 in.). Make three separate measurements at each setting and calculate the average. The maximum difference between the average pressure reading and the average manometer reading shall not exceed 1 mm (0.05 in.). If the differences exceed the limit specified, adjust or replace the pressure gauge. After each field use, check the calibration of the pressure gauges.

5.3.3 Total LFE. Same as the metering system in Method 5, Section 5.3.

5.3.4 Recycle LFE. Same as the metering system in Method 5, Section 5.3, except completely close both the coarse and fine recycle valves.

5.4 Probe Heater. Connect the probe to the meter and flow control console with the umbilical connector. Insert a thermocouple into the probe sample line approximately half the length of the probe sample line. Calibrate the probe heater at 66°C (150°F), 121°C (250°F), and 177°C (350°F). Turn on the power, and set the probe heater to the specified temperature. Allow the heater to equilibrate, and record the thermocouple temperature and the meter and flow control console temperature to the nearest 0.5°C (1°F). The two temperatures should agree within 5.5°C (10°F). If this agreement is not met, adjust or replace the probe heater controller.

5.5 Temperature Gauges. Connect all thermocouples, and let the meter and flow control console equilibrate to ambient temperature. All thermocouples shall agree to within 1.1°C (2.0°F) with a standard mercury-in-glass thermometer. Replace defective thermocouples.

5.6 Barometer. Calibrate against a standard mercury-in-glass barometer.

5.7 Probe Cyclone and Nozzle Combinations. The probe cyclone and nozzle combinations need not be calibrated if the cyclone meets the design specifications in Figure 12 of this method and the nozzle meets the design specifications in appendix B of the *Application Guide for the Source PM_{10} Exhaust Gas Recycle Sampling System*, EPA/600/3–88–058. This document may be obtained from Roy Huntley at (919) 541–1060. If the nozzles do not meet the design specifications, then test the cyclone and nozzle combination for conformity with the performance specifications (PS's) in Table 1 of this method. The purpose of the PS tests is to determine if the cyclone's sharpness of cut meets minimum performance criteria. If the cyclone does not meet design specifications, then, in addition to the cyclone and nozzle combination conforming to the PS's, calibrate the cyclone and determine the relationship between flow rate, gas viscosity, and gas density. Use the procedures in Section 5.7.5 of this method to conduct PS tests and the procedures in Section 5.8 of this method to calibrate the cyclone. Conduct the PS tests in a wind tunnel described in Section 5.7.1 of this method and using a particle generation system described in Section 5.7.2 of this method. Use five particle sizes and three wind velocities as listed

in Table 2 of this method. Perform a minimum of three replicate measurements of collection efficiency for each of the 15 conditions listed, for a minimum of 45 measurements.

5.7.1 Wind Tunnel. Perform calibration and PS tests in a wind tunnel (or equivalent test apparatus) capable of establishing and maintaining the required gas stream velocities within 10 percent.

5.7.2 Particle Generation System. The particle generation system shall be capable of producing solid monodispersed dye particles with the mass median aerodynamic diameters specified in Table 2 of this method. The particle size distribution verification should be performed on an integrated sample obtained during the sampling period of each test. An acceptable alternative is to verify the size distribution of samples obtained before and after each test, with both samples required to meet the diameter and monodispersity requirements for an acceptable test run.

5.7.2.1 Establish the size of the solid dye particles delivered to the test section of the wind tunnel using the operating parameters of the particle generation system, and verify the size during the tests by microscopic examination of samples of the particles collected on a membrane filter. The particle size, as established by the operating parameters of the generation system, shall be within the tolerance specified in Table 2 of this method. The precision of the particle size verification technique shall be at least ±0.5 µm, and the particle size determined by the verification technique shall not differ by more than 10 percent from that established by the operating parameters of the particle generation system.

5.7.2.2 Certify the monodispersity of the particles for each test either by microscopic inspection of collected particles on filters or by other suitable monitoring techniques such as an optical particle counter followed by a multichannel pulse height analyzer. If the proportion of multiplets and satellites in an aerosol exceeds 10 percent by mass, the particle generation system is unacceptable for purposes of this test. Multiplets are particles that are agglomerated, and satellites are particles that are smaller than the specified size range.

5.7.3 Schematic Drawings. Schematic drawings of the wind tunnel and blower system and other information showing complete procedural details of the test atmosphere generation, verification, and delivery techniques shall be furnished with calibration data to the reviewing agency.

5.7.4 Flow Rate Measurement. Determine the cyclone flow rates with a dry gas meter and a stopwatch, or a calibrated orifice system capable of measuring flow rates to within 2 percent.

5.7.5 Performance Specification Procedure. Establish the test particle generator operation and verify the particle size microscopically. If mondispersity is to be verified by measurements at the beginning and the end of the run rather than by an integrated sample, these measurements may be made at this time.

5.7.5.1 The cyclone cut size (D_{50}) is defined as the aerodynamic diameter of a particle having a 50 percent probability of penetration. Determine the required cyclone flow rate at which D_{50} is 10 µm. A suggested procedure is to vary the cyclone flow rate while keeping a constant particle size of 10 µm. Measure the PM collected in the cyclone (m_c), exit tube (m_t), and filter (m_f). Compute the cyclone efficiency (E_c) as follows:

$$E_c = \frac{m_c}{(m_c + m_t + m_f)} \times 100$$

5.7.5.2 Perform three replicates and calculate the average cyclone efficiency as follows:

$$E_{avg} = \frac{(E_1 + E_2 + E_3)}{3}$$

where E_1, E_2, and E_3 are replicate measurements of E_c.

5.7.5.3 Calculate the standard deviation (σ) for the replicate measurements of E_c as follows:

$$\sigma = \left[\frac{(E_1^2 + E_2^2 + E_3^2) - \frac{(E_1 + E_2 + E_3)^2}{3}}{2} \right]^{1/2}$$

if σ exceeds 0.10, repeat the replicate runs.

5.7.5.4 Using the cyclone flow rate that produces D_{50} for 10 µm, measure the overall efficiency of the cyclone and nozzle, E_o, at the particle sizes and nominal gas velocities in Table 2 of this method using this following procedure.

5.7.5.5 Set the air velocity in the wind tunnel to one of the nominal gas velocities from Table 2 of this method. Establish isokinetic sampling conditions and the correct flow rate through the sampler (cyclone and nozzle) using recycle capacity so that

the D_{50} is 10 µm. Sample long enough to obtain ±5 percent precision on the total collected mass as determined by the precision and the sensitivity of the measuring technique. Determine separately the nozzle catch (m_n), cyclone catch (m_c), cyclone exit tube catch (m_t), and collection filter catch (m_f).

5.7.5.6 Calculate the overall efficiency (E_o) as follows:

$$E_o = \frac{(m_n + m_c)}{(m_n + m_c + m_t + m_f)} \times 100$$

5.7.5.7 Do three replicates for each combination of gas velocities and particle sizes in Table 2 of this method. Calculate E_o for each particle size following the procedures described in this section for determining efficiency. Calculate the standard deviation (σ) for the replicate measurements. If σ exceeds 0.10, repeat the replicate runs.

5.7.6 Criteria for Acceptance. For each of the three gas stream velocities, plot the average E_o as a function of particle size on Figure 13 of this method. Draw a smooth curve for each velocity through all particle sizes. The curve shall be within the banded region for all sizes, and the average E_c for a D_{50} for 10 µm shall be 50 ± 0.5 percent.

5.8 Cyclone Calibration Procedure. The purpose of this section is to develop the relationship between flow rate, gas viscosity, gas density, and D_{50}. This procedure only needs to be done on those cyclones that do not meet the design specifications in Figure 12 of this method.

5.8.1 Calculate cyclone flow rate. Determine the flow rates and D_{50}'s for three different particle sizes between 5 µm and 15 µm, one of which shall be 10 µm. All sizes must be within 0.5 µm. For each size, use a different temperature within 60°C (108°F) of the temperature at which the cyclone is to be used and conduct triplicate runs. A suggested procedure is to keep the particle size constant and vary the flow rate. Some of the values obtained in the PS tests in Section 5.7.5 may be used.

5.8.1.1 On log-log graph paper, plot the Reynolds number (Re) on the abscissa, and the square root of the Stokes 50 number [$(STK_{50})^{1/2}$] on the ordinate for each temperature. Use the following equations:

$$Re = \frac{4\rho Q_{cyc}}{d_{cyc}\pi\mu_{cyc}}$$

$$(Stk_{50})^{1/2} = \left[\frac{4\,Q_{cyc}\,(D_{50})^2}{9\,\pi\,\mu_{cyc}\,(d_{cyc})^3}\right]^{1/2}$$

where:

Q_{cyc} = Cyclone flow rate cm^3/sec.
ρ = Gas density, g/cm^3.
d_{cyc} = Diameter of cyclone inlet, cm.
μ_{cyc} = Viscosity of gas through the cyclone, poise.
D_{50} = Cyclone cut size, cm.

5.8.1.2 Use a linear regression analysis to determine the slope (m), and the y-intercept (b). Use the following formula to determine Q, the cyclone flow rate required for a cut size of 10 µm.

$$Q = \frac{\pi\,\mu_{cyc}}{4}\left[(3000)(K_1)^b\right]^{-(0.5-m)}\left[\frac{T_s}{M_c\,P_s}\right]^{m/(m-0.5)} d^{(m-1.5)/(m-0.5)}$$

where:

Q = Cyclone flow rate for a cut size of 10 µm, cm^3/sec.
T_s = Stack gas temperature, °K,
d = Diameter of nozzle, cm.
$K_1 = 4.077 \times 10^{-3}$.

5.8.2. Directions for Using Q. Refer to Section 5 of the EGR operators manual for directions in using this expression for Q in the setup calculations.

6. Calculations

6.1 The EGR data reduction calculations are performed by the EGR reduction computer program, which is written in IBM BASIC computer language and is available through NTIS, Accession number PB90-500000, 5285 Port Royal Road, Springfield, Virginia 22161. Examples of program inputs and outputs are shown in Figure 14 of this method.

6.1.1 Calculations can also be done manually, as specified in Method 5, Sections 6.3 through 6.7, and 6.9 through 6.12, with the addition of the following:

6.1.2 Nomenclature.

B_c = Moisture fraction of mixed cyclone gas, by volume, dimensionless.
C_1 = Viscosity constant, 51.12 micropoise for °K (51.05 micropoise for °R).
C_2 = Viscosity constant, 0.372 micropoise/°K (0.207 micropoise/°R).
C_3 = Viscosity constant, 1.05×10^{-4} micropoise/°K^2 (3.24×10^{-5} micropoise/°R^2).
C_4 = Viscosity constant, 53.147 micropoise/fraction O_2.
C_5 = Viscosity constant, 74.143 micropoise/fraction H_2O.

D_{50} = Diameter of particles having a 50 percent probability of penetration, µm.
f_{02} = Stack gas fraction O_2, by volume, dry basis.
K_1 = 0.3858 °K/mm Hg (17.64 °R/in. Hg).
M_c = Wet molecular weight of mixed gas through the PM_{10} cyclone, g/g-mole (lb/lb-mole).
M_d = Dry molecular weight of stack gas, g/g-mole (lb/lb-mole).
P_{bar} = Barometer pressure at sampling site, mm Hg (in. Hg).
P_{in1} = Gauge pressure at inlet to total LFE, mm H_2O (in. H_2O).
P_3 = Absolute stack pressure, mm Hg (in. Hg).
Q_2 = Total cyclone flow rate at wet cyclone conditions, m^3/min (ft^3/min).
$Q_{s(std)}$ = Total cyclone flow rate at standard conditons, dscm/min (dscf/min).
T_m = Average temperature of dry gas meter, °K (°R).
T_s = Average stack gas temperature, °K (°R).
$V_{w(std)}$ = Volume of water vapor in gas sample (standard conditions), scm (scf).
X_T = Total LFE linear calibration constant, m^3/[(min)(mm H_2O]) {ft^3/[(min)(in. H_2O)]}.
Y_T = Total LFE linear calibration constant, dscm/min (dscf/min).
ΔP_T = Pressure differential across total LFE, mm H_2O, (in. H_2O).
θ = Total sampling time, min.
μ_{cyc} = Viscosity of mixed cyclone gas, micropoise.
μ_{LFE} = Viscosity of gas laminar flow elements, micropoise.
μ_{std} = Viscosity of standard air, 180.1 micropoise.

6.2 PM_{10} Particulate Weight. Determine the weight of PM_{10} by summing the weights obtained from Container Numbers 1 and 3, less the acetone blank.

6.3 Total Particulate Weight. Determine the particulate catch for PM greater than PM_{10} from the weight obtained from Container Number 2 less the acetone blank, and add it to the PM_{10} particulate weight.

6.4 PM_{10} Fraction. Determine the PM_{10} fraction of the total particulate weight by dividing the PM_{10} particulate weight by the total particulate weight.

6.5 Total Cyclone Flow Rate. The average flow rate at standard conditions is determined from the average pressure drop across the total LFE and is calculated as follows:

$$Q_{s(std)} = K_1 \left[\frac{X_T}{\Delta P} \frac{\mu_{std}}{\mu_{LFE}} + Y_T \right] \frac{P_{bar} + P_{inl}/13.6}{T_m}$$

The flow rate, at actual cyclone conditions, is calculated as follows:

$$Q_s = \frac{T_s}{K_1 P_s} \left[Q_{s(std)} + \frac{V_{m(std)}}{\Theta} \right]$$

The flow rate, at actual cyclone conditions, is calculated as follows:

$$Q_s = \frac{T_s}{K_1 P_s} \left[Q_{s(std)} + \frac{V_{m(std)}}{\Theta} \right]$$

6.6 Aerodynamic Cut Size. Use the following procedure to determine the aerodynamic cut size (D_{50}).

6.6.1 Determine the water fraction of the mixed gas through the cyclone by using the equation below.

$$B_c = \frac{V_{w(std)}}{Q_{s(std)}\,\Theta + V_{w(std)}}$$

6.6.2 Calculate the cyclone gas viscosity as follows:

$\mu_{cyc} = C_1 + C_2\,T_s + C_3\,T_s^2 + C_4\,f_{02} - C_5\,B_c$

6.6.3 Calculate the molecular weight on a wet basis of the cyclone gas as follows:

$M_c = M_d(1 - B_c) + 18.0(B_c)$

6.6.4 If the cyclone meets the design specification in Figure 12 of this method, calculate the actual D_{50} of the cyclone for the run as follows:

$$D_{50} = \beta_1 \left[\frac{T_s}{M_c P_s} \right]^{0.2.091} \left[\frac{\mu_{cyc}}{Q_s} \right]^{0.7091}$$

where β_1 = 0.1562.

6.6.5 If the cyclone does not meet the design specifications in Figure 12 of this method, then use the following equation to calculate D_{50}.

$$D_{50}=(3)(10)^{b}\,(7.376\times10^{-4})^{m}\left[\frac{M_c\,P_s}{T_s}\right]\left[\frac{4\,Q_s}{\pi\,\mu_{cyc}}\right]d^{(1.5-m)}$$

where:

m = Slope of the calibration curve obtained in Section 5.8.2.

b = y-intercept of the calibration curve obtained in Section 5.8.2.

6.7 Acceptable Results. Acceptability of anisokinetic variation is the same as Method 5, Section 6.12.

6.7.1 If 9.0 µm ≤ D_{50} ≤11 µm and 90 ≤ I ≤ 110, the results are acceptable. If D_{50} is greater than 11 µm, the Administrator may accept the results. If D_{50} is less than 9.0 µm, reject the results and repeat the test.

7. Bibliography

1. Same as Bibliography in Method 5.

2. McCain, J.D., J.W. Ragland, and A.D. Williamson. Recommended Methodology for the Determination of Particles Size Distributions in Ducted Sources, Final Report. Prepared for the California Air Resources Board by Southern Research Institute. May 1986.

3. Farthing, W.E., S.S. Dawes, A.D. Williamson, J.D. McCain, R.S. Martin, and J.W. Ragland. Development of Sampling Methods for Source PM–10 Emissions. Southern Research Institute for the Environmental Protection Agency. April 1989.

4. *Application Guide for the Source PM_{10} Exhaust Gas Recycle Sampling System*, EPA/600/3–88–058.

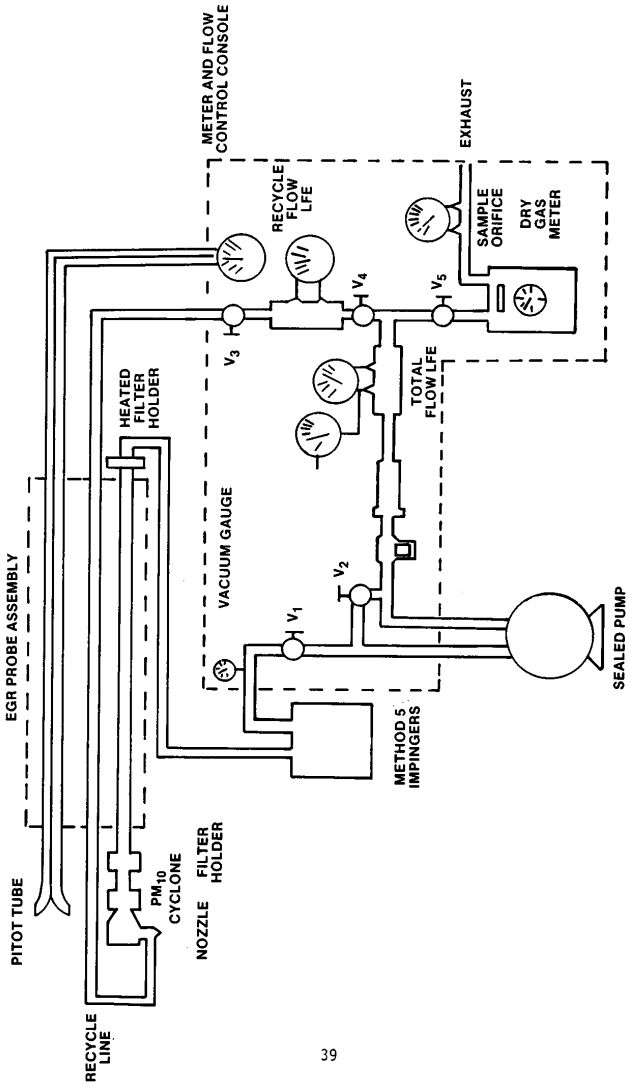

Figure 1. Schematic of the exhaust gas recycle train.

39

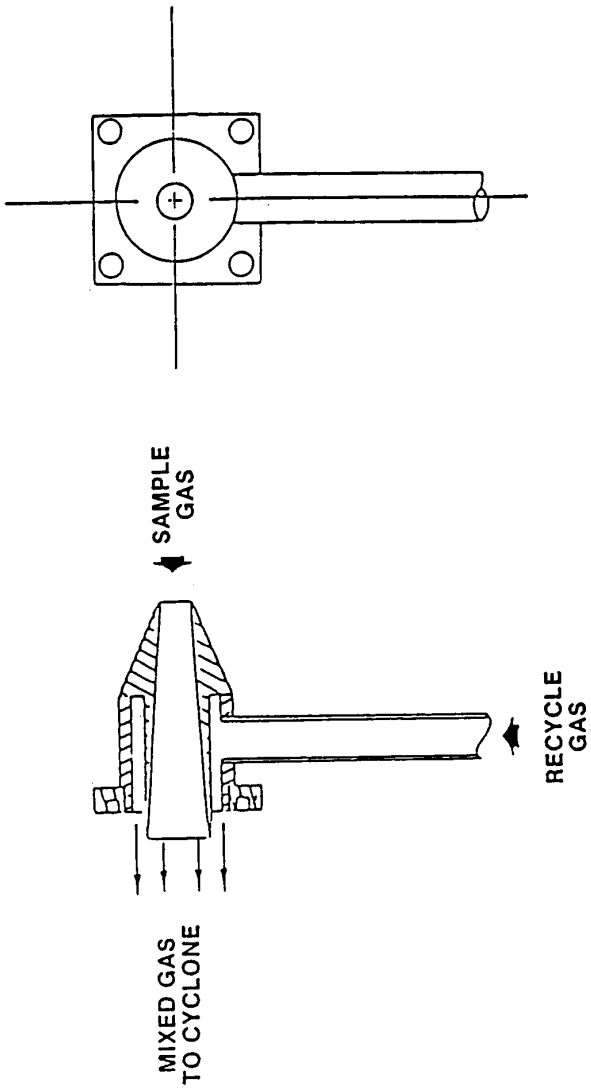

Figure 2. Schematic of EGR nozzle assembly.

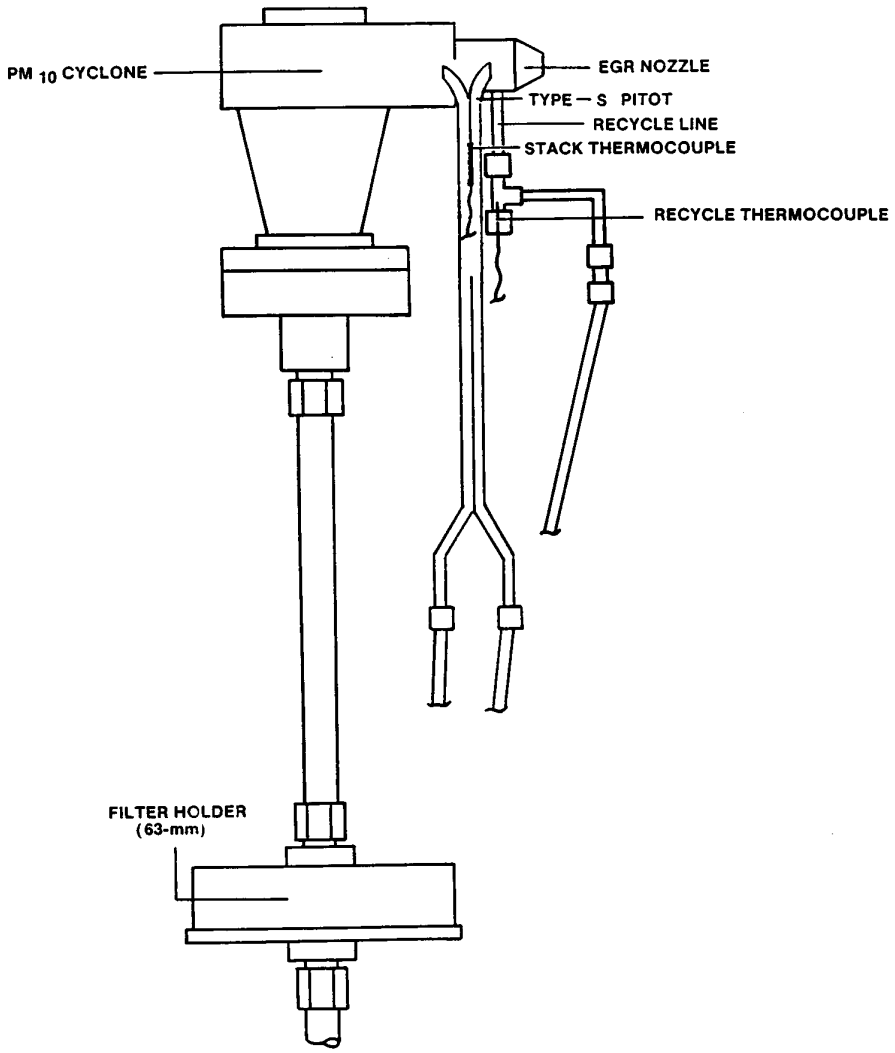

Figure 3. EGR PM_{10} cyclone sampling device.

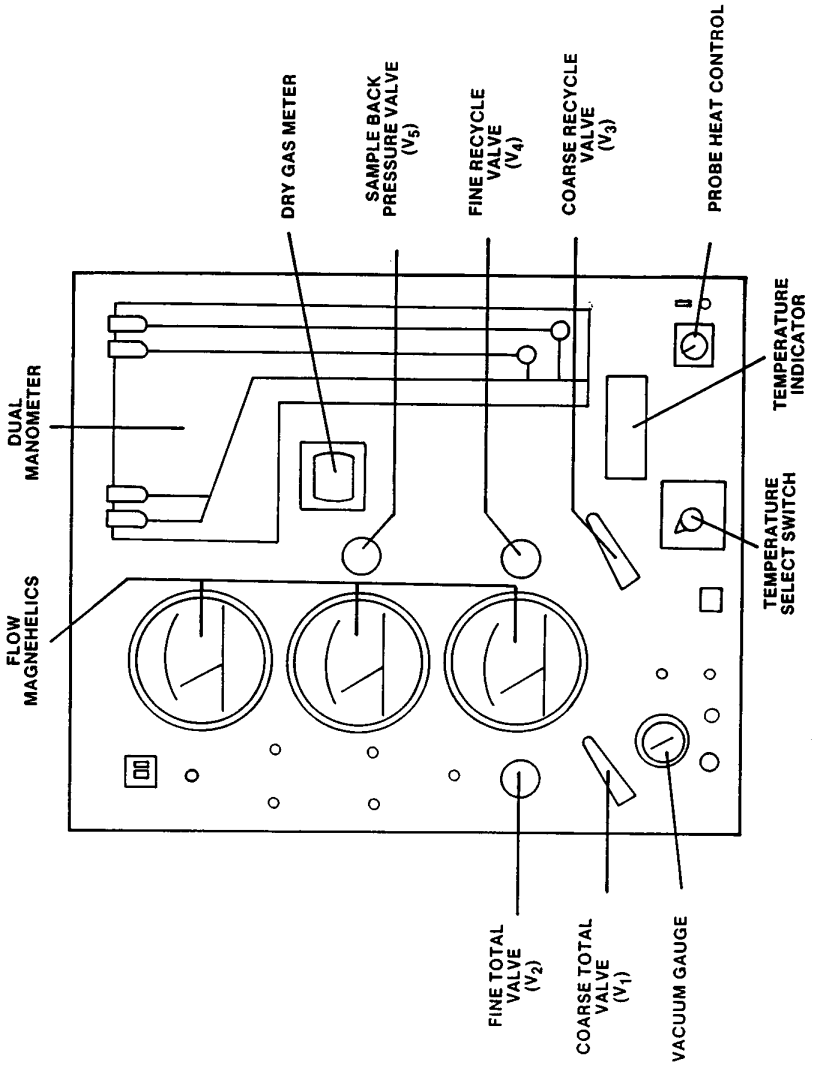

Figure 4. Example EGR control module (front view) showing principle components.

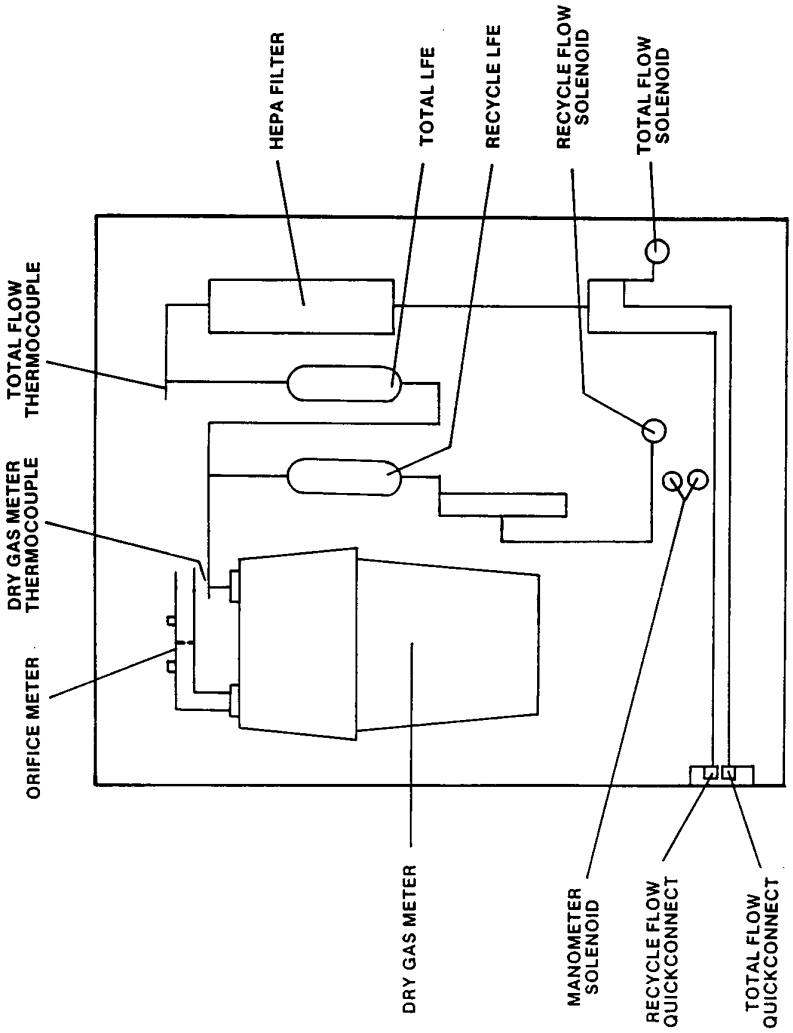

Figure 5. Example EGR control module (rear view) showing principle components.

EXAMPLE EMISSION GAS RECYCLE SETUP SHEET

VERSION 3.1 MAY 1986

TEST I.D.: SAMPLE SETUP
RUN DATE: 11/24/86
LOCATION: SOURCE SIM
OPERATOR(S): RH JB
NOZZLE DIAMETER (IN): .25

STACK CONDITIONS:

AVERAGE TEMPERATURE (F): 200.0
AVERAGE VELOCITY (FT/SEC): 15.0
AMBIENT PRESSURE (IN HG): 29.92
STACK PRESSURE (IN H20): .10

GAS COMPOSITION.
H20=10.0% ..... MD=28.84
02=20.9% ..... MW=27.75
CO2=.0% ..... (LB/LB MOLE)

TARGET PRESSURE DROPS

TEMPERATURE (F)

DP(PTO)	150	161	172	183	194	206	217	228
0.026	SAMPLE	.49	.49	.48	.47	.46	.45	.45
	TOTAL	1.90	1.90	1.91	1.92	1.92	1.92	1.93
	RECYCLE	2.89	2.92	2.94	2.97	3.00	3.02	3.05
	% RCL	61%	61%	62%	62%	63%	63%	63%
.031	.58	.56	.55	.55	.55	.54	.53	.52
	1.88	1.89	1.89	1.90	1.91	1.91	1.91	1.92
	2.71	2.74	2.77	2.80	2.82	2.85	2.88	2.90
	57%	57%	58%	58%	59%	59%	60%	60%
.035	.67	.65	.64	.63	.62	.61	.670	.59
	1.88	1.88	1.89	1.89	1.90	1.90	1.91	1.91
	2.57	2.60	2.63	2.66	2.69	2.72	2.74	2.74
	54%	55%	55%	56%	56%	57%	57%	57%
.039	.75	.74	.72	.71	.70	.69	.67	.66
	1.87	1.88	1.88	1.89	1.89	1.90	1.90	1.91
	2.44	2.47	2.50	2.53	2.56	2.59	2.62	2.65
	51%	52%	52%	53%	53%	54%	54%	55%

Figure 6. Example EGR setup sheet.

Barometric pressure, P_{bar}, in. Hg. = _____
Stack static pressure, P_g, in. H_2O. = _____
Average stack temperature, t_s, °F. = _____
Meter temperature, t_m, °F. = _____
Gas analysis:
$\%CO_2$ ..... = _____
$\%O_2$ ..... = _____
$\%N_2+\%CO$ ..... = _____
Fraction moisture content, B_{ws}. = _____
Calibration data:
Nozzle diameter, D_n in. = _____
Pitot coefficient, C_p. = _____
$\Delta H_@$, in. H_2O ..... = _____

Molecular weight of stack gas, dry basis:
$M_d=0.44(\%CO_2)+0.32(\%O_2)+0.28(\%N_2+\%CO)$ = _____ lb/lb mole
Molecular weight of stack gas, wet basis:
$M_w=M_d(1-B_{ws})+18B_{ws}$. = _____ lb/lb mole
Absolute stack pressure:
$P_s=P_{bar}+(P_g/13.6)$ = _____ in. Hg

$$K=846.72\ D_n^4\ \Delta H_@\ C_p^2\ (1-B_{ws})^2 \quad \frac{M_d\ (t_m+460)\ P_s}{M_w\ (t_s+460)\ P_{bar}} = _____$$

Desired meter orifice pressure (ΔH) for velocity head of stack gas (Δp):

$\Delta H=K\ \Delta p=$_____ in. H_2O

Figure 7. Example worksheet 1, meter orifice pressure head calculation.

Barometric pressure, P_{bar}, in. Hg. = _____
Absolute stack pressure, P_s, in. Hg. = _____
Average stack temperature, T_s, °R. = _____
Meter temperature, T_m, °R. = _____
Molecular weight of stack gas, wet basis, M_d lb/lb mole. = _____
Pressure upstream of LFE, in. Hg. = 0.6
Gas analysis:
$\%O_2$ ..... = _____
Fraction moisture content, B_{ws}. = _____
Calibration data:
Nozzle diameter, D_n, in = _____
Pitot coefficient, C_p ... = _____
Total LFE calibration constant, X_t. = _____
Total LFE calibration constant, T_t. = _____
Absolute pressure upstream of LFE:
$P_{LFE}=P_{bar}+0.6$ ..... = _____ in. Hg
Viscosity of gas in total LFE:
$\mu_{LFE}=152.418+0.2552\ T_m+3.2355\times10^{-5}\ T_m^2+0.53147\ (\%O_2)$. = _____
Viscosity of dry stack gas:
$\mu_d=152.418+0.2552\ T_s+3.2355\times10^{-5}\ T_s^2+0.53147\ (\%O_2)$. = _____

Constants:

$$K_1=1.5752\times10^{-5}\ \frac{\mu_{LFE}\ T_m\ P_s^{0.7051}\ \mu_d}{P_{LFE}\ M_d^{0.2949}\ T_s^{0.7051}} = _____$$

$$K_2=0.1539\ \frac{\mu_{LFE}\ T_m\ D_n^2\ C_p}{P_{LFE}} \left[\frac{P_s}{T_s}\right]^{1/2}$$

$$K_3 = \frac{B_{ws}\ \mu_d\ [1-0.2949\ (1-18/M_d)]+74.143\ B_{ws}\ (1-B_{ws})}{\mu_d-74.143\ B_{ws}} = _____$$

$$A_1=\frac{K_1}{X_t} - \frac{\mu_{LFE}\ Y_t}{180.1\ X_t} = _____$$

$$B_1 = \frac{K_2\ K_3}{(M_w)^{1/2} X_t} = _____$$

Total LFE pressure head:
$\Delta p_t=A_1-B_1\ (\Delta p)^{1/2}=$_____ in. H_2O

Figure 8. Example worksheet 2, total LFE pressure head.

Barometric pressure, P_{bar}, in. Hg=_____
Absolute stack pressure, P_s in. Hg=_____
Average stack temperature, T_s, °R=_____
Meter temperature, T_m, °R=_____
Molecular weight of stack gas, dry basis, M_d, lb/lb mole=_____
Viscosity of LFE gas, μ_{LFE}, poise=_____
Viscosity of dry stack gas, μ_d, poise=_____
Absolute pressure upstream of LFE, P_{PLE}, in. Hg=_____
Calibration data:

Nozzle diameter, D_n, in.=_____
Pitot coefficient, C_p=_____

Recycle LFE calibration constant, X_r=_____
Recycle LFE calibration constant, Y_r=_____

$$K_1 = 1.5752\times10^{-5} \frac{\mu_{LFE}\ T_m\ P_s^{0.7051}\ \mu_d}{P_{LFE}\ M_d^{0.2949}\ T_s^{0.7051}} = _____$$

$$K_2 = 0.1539 \frac{M_{LFE}\ T_m\ D_n^2\ C_p}{P_{LFE}} \left[\frac{P_s}{T_s}\right]^{1/2}$$

$$K_4 = \frac{\mu_d}{M_w^{0.2051}\ M_d^{0.2949}\ (\mu_d - 74.143\ B_{ws})} = _____$$

$$B_2 = \frac{K_4\ K_2}{X_r} = _____$$

$$A_2 = \frac{K_1}{X_r} - \frac{\mu_{LFE}\ Y_r}{180.1\ X_r} = _____$$

Pressure head for recycle LFE:

$\Delta P_r = A_2 - B_2\ (\Delta p)^{1/2}$=_____in. H_2O

Figure 9. Example worksheet 3, recycle LFE pressure head.

Run Code	Date	Stack Temperature (°F)	Gas Composition % CO_2 % O_2 % CO
Sampler ID	Start Time	Stack Static Pressure (in. H_2O)	Moisture Content
Filter ID	End Time	Ambient Temperature (°F)	
Sampler Orientation	Sampling Duration (min)	Ambient Pressure (in. Hg)	
Sampling Location	DGM (initial)	Gas Velocity	Pitot Leak Check (Pos) (Neg)
Nozzle Diameter-ID (in.)	DGM (final)	System, Leak Check (≥ 15 in. Hg)	Notes
Operator (s)	Sample Volume (ft^3)		
Dual Manometer Leveled and Zeroed?			
Magnehelics Zeroed?			

Run Time	Port No / Trav. Pt.	ΔP Pitot	ΔH Sample	DGM Volume	ΔP Total	P Inlet	ΔP Recycle	T_1 Stack	T_2 Recycle	T_3 Probe	T_4 LFE	T_5 DGM

Figure 10. Example EGR Procedure data sheet.

Plant _____
Date _____
Run no. _____
Filter no. _____
Amount liquid lost during transport _____
Acetone blank volume, ml _____
Acetone wash volume, ml (2)_____(3) _____
Acetone blank conc., mg/mg (Equation 5–4, Method 5) _____
Acetone wash blank, mg (Equation 5–5, Method 5) _____

Container number	Weight of particulate matter, mg		
	Final weight	Tare weight	Weight gain
1	.....	.....	.....
3	.....	.....	.....
Total	.....	.....	.....
Less acetone blank	.....	.....	.....
Weight of PM_{10}	.....	.....	.....
2	.....	.....	.....
Less acetone blank	.....	.....	.....
Total particulate weight	.....	.....	.....

Figure 11. EGR method analysis sheet.

Cyclone Interior Dimensions

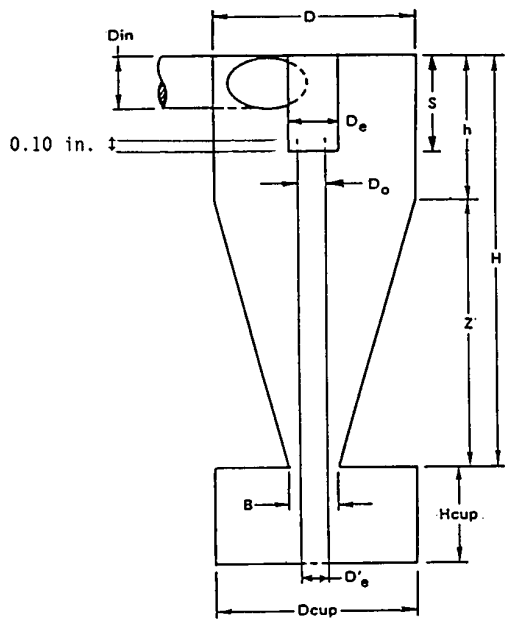

	Dimensions (±0.02 cm, ±0.01 in.)											
	Din	D	De	B	H	h	Z	S	Hcup	Dcup	D'_e	D_o
cm	1.27	4.47	1.50	1.88	6.95	2.24	4.71	1.57	2.25	4.45	1.02	1.24
inches	0.50	1.76	0.59	0.74	2.74	0.88	1.85	0.62	0.89	1.75	0.40	0.49

Figure 12. Cyclone design specifications.

TABLE 1. PERFORMANCE SPECIFICATIONS FOR SOURCE PM_{10} Cyclones and Nozzle Combinations

Parameter	Units	Specification
1. Collection efficiency.	Percent	Such that collection efficiency falls within envelope specified by Section 5.7.6 and Figure 13.
2. Cyclone cut size (D_{50}).	µm	10±1 µm aerodynamic diameter.

TABLE 2. PARTICLE SIZES AND NOMINAL GAS VELOCITIES FOR EFFICIENCY

Particle size (µm)[a]	Target gas velocities (m/sec)		
	7±1.0	15±1.5	25±2.5
5±0.5	.....	.....	.....
7±0.5	.....	.....	.....
10±0.5	.....	.....	.....
14±1.0	.....	.....	.....
20±1.0	.....	.....	.....

(a) Mass median aerodynamic diameter.

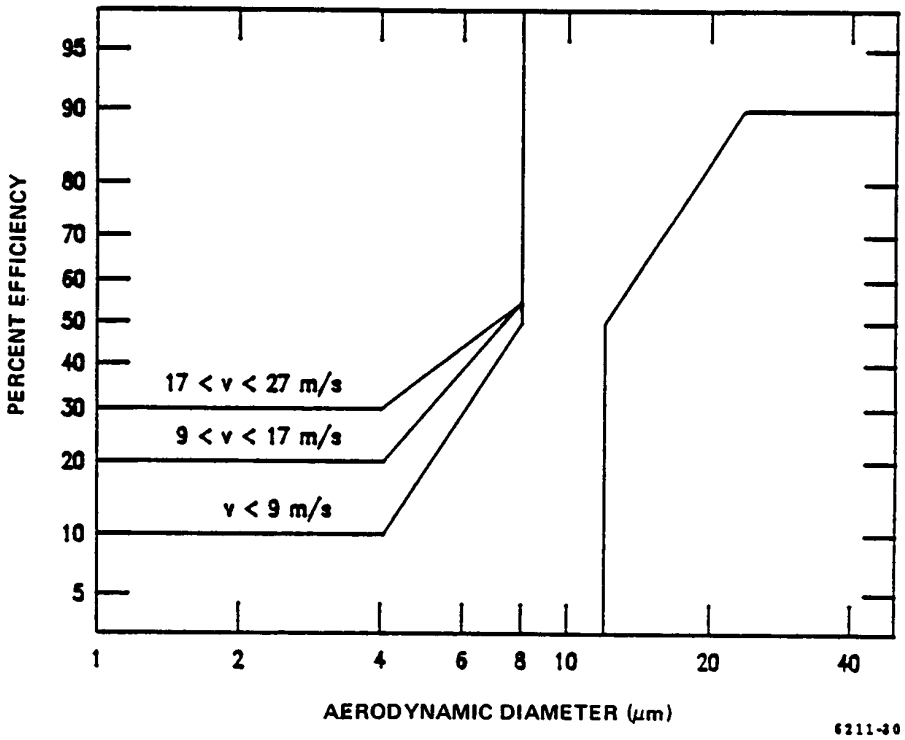

Figure 13. Efficiency envelope for the PM_{10} cyclone.

EMISSION GAS RECYCLE, DATA REDUCTION, VERSION 3.4 MAY 1986

Test ID. Code: Chapel Hill 2.
Test Location: Baghouse Outlet.
Test Site: Chapel Hill.
Test Date: 10/20/86.
Operators(s): JB RH MH.

Entered Run Data

Temperatures:	
T(STK)	251.0 F
T(RCL)	259.0 F
T(LFE)	81.0 F
T(DGM)	76.0 F
System Pressures:	
DH(ORI)	1.18 INWG
DP(TOT)	1.91 INWG
P(INL)	12.15 INWG
DP(RCL)	2.21 INWG
DP(PTO)	0.06 INWG
Miscellanea:	
P(BAR)	29.99 INWG
DP(STK)	0.10 INWG
V(DGM)	13.744 FT3
TIME	60.00 MIN
% CO2	8.00
% O2	20.00
NOZ (IN)	0.2500
Water Content:	
Estimate	0.0%
or	
Condenser	7.0 ML
Column	0.0 GM
Raw Masses:	
Cyclone 1	21.7 MG
Filter	11.7 MG
Impinger Residue	0.0 MG
Blank Values:	
CYC Rinse	0.0 MG
Filter Holder Rinse	0.0 MG
Filter Blank	0.0 MG
Impinger Rinse	0.0 MG

Calibration Values:	
CP(PITOT)	0.840
DH@(ORI)	10.980
M(TOT LFE)	0.2298
B(TOT LFE)	−.0058
M(RCL LFE)	0.0948
B(RCL LFE)	−.0007
DGM GAMMA	0.9940

Reduced Data

Stack Velocity (FT/SEC)	15.95
Stack Gas Moisture (%)	2.4
Sample Flow Rate (ACFM)	0.3104
Total Flow Rate (ACFM)	0.5819
Recycle Flow Rate (ACFM)	0.2760
Percent Recycle	46.7
Isokinetic Ratio (%)	95.1

	(Particulate)		(MG/DNCM)	(GR/ACF)	(GR/DCF)	(LB/DSCF) (X 1E6)
	(UM)	(% <)				
Cyclone 1	10.15	35.8	56.6	0.01794	0.02470	3.53701
Backup Filter	.....	.....	30.5	0.00968	0.01332	1.907
Particulate Total	.....	.....	87.2	0.02762	0.03802	5.444

Note: Figure 14. Example inputs and outputs of the EGR reduction program.

METHOD 201A—DETERMINATION OF PM_{10} EMISSIONS (CONSTANT SAMPLING RATE PROCEDURE)

1. Applicability and Principle

1.1 Applicability. This method applies to the in-stack measurement of particulate matter (PM) emissions equal to or less than an aerodynamic diameter of nominally 10 (PM_{10}) from stationary sources. The EPA recognizes that condensible emissions not collected by an in-stack method are also PM_{10}, and that emissions that contribute to ambient, PM_{10} levels are the sum of condensible emissions and emissions measured by an in-stack PM_{10} method, such as this method or Method 201. Therefore, for establishing source contributions to ambient levels of PM_{10}, such as for emission inventory purposes, EPA suggests that source PM_{10} measurement include both in-stack PM_{10} and condensible emissions. Condensible emissions may be measured by an impinger analysis in combination with this method.

1.2 Principle. A gas sample is extracted at a constant flow rate through an in-stack sizing device, which separates PM greater than PM_{10}. Variations from isokinetic sampling conditions are maintained within well-defined limits. The particulate mass is determined gravimetrically after removal of uncombined water.

2. Apparatus

NOTE: Methods cited in this method are part of 40 CFR part 60, appendix A.

2.1 Sampling Train. A schematic of the Method 201A sampling train is shown in Figure 1 of this method. With the exception of the PM_{10} sizing device and in-stack filter, this train is the same as an EPA Method 17 train.

2.1.1 Nozzle. Stainless steel (316 or equivalent) with a sharp tapered leading edge. Eleven nozzles that meet the design specification in Figure 2 of this method are recommended. A larger number of nozzles with small nozzle increments increase the likelihood that a single nozzle can be used for the entire traverse. If the nozzles do not meet the design specifications in Figure 2 of this method, then the nozzles must meet the criteria in Section 5.2 of this method.

2.1.2 PM_{10} Sizer. Stainless steel (316 or equivalent), capable of determining the PM_{10} fraction. The sizing device shall be either a cyclone that meets the specifications in Section 5.2 of this method or a cascade impactor that has been calibrated using the procedure in Section 5.4 of this method.

2.1.3 Filter Holder. 63-mm, stainless steel. An Andersen filter, part number SE274, has been found to be acceptable for the in-stack filter. NOTE: Mention of trade names or specific products does not constitute endorsement by the Environmental Protection Agency.

2.1.4 Pitot Tube. Same as in Method 5, Section 2.1.3. The pitot lines shall be made of heat resistant tubing and attached to the probe with stainless steel fittings.

2.1.5 Probe Liner. Optional, same as in Method 5, Section 2.1.2.

2.1.6 Differential Pressure Gauge, Condenser, Metering System, Barometer, and Gas Density Determination Equipment. Same as in Method 5, Sections 2.1.4, and 2.1.7 through 2.1.10, respectively.

2.2 Sample Recovery.

2.2.1 Nozzle, Sizing Device, Probe, and Filter Holder Brushes. Nylon bristle brushes with stainless steel wire shafts and handles, properly sized and shaped for cleaning the nozzle, sizing device, probe or probe liner, and filter holders.

2.2.2 Wash Bottles, Glass Sample Storage Containers, Petri Dishes, Graduated Cylinder and Balance, Plastic Storage Containers, Funnel and Rubber Policeman, and Funnel. Same as in Method 5, Sections 2.2.2 through 2.2.8, respectively.

2.3 Analysis. Same as in Method 5, Section 2.3.

3. Reagents

The reagents for sampling, sample recovery, and analysis are the same as that specified in Method 5, Sections 3.1, 3.2, and 3.3, respectively.

4. Procedure

4.1 Sampling. The complexity of this method is such that, in order to obtain reliable results, testers should be trained and experienced with the test procedures.

4.1.1 Pretest Preparation. Same as in Method 5, Section 4.1.1.

4.1.2 Preliminary Determinations. Same as in Method 5, Section 4.1.2, except use the directions on nozzle size selection and sampling time in this method. Use of any nozzle greater than 0.16 in. in diameter requires a sampling port diameter of 6 inches. Also, the required maximum number of traverse points at any location shall be 12.

4.1.2.1 The sizing device must be in-stack or maintained at stack temperature during sampling. The blockage effect of the CSR sampling assembly will be minimal if the cross-sectional area of the sampling assembly is 3 percent or less of the cross-sectional area of the duct. If the cross-sectional area of the assembly is greater than 3 percent of the cross-sectional area of the duct, then either determine the pitot coefficient at sampling conditions or use a standard pitot with a known coefficient in a configuration with the CSR sampling assembly such that flow disturbances are minimized.

4.1.2.2 The setup calculations can be performed by using the following procedures.

4.1.2.2.1 In order to maintain a cut size of 10 µm in the sizing device, the flow rate through the sizing device must be maintained at a constant, discrete value during the run. If the sizing device is a cyclone that meets the design specifications in Figure 3 of this method, use the equations in Figure 4 of this method to calculate three orifice heads (ΔH): one at the average stack temperature, and the other two at temperatures ±28 °C (±50 °F) of the average stack temperature. Use ΔH calculated at the average stack temperature as the pressure head for the sample flow rate as long as the stack temperature during the run is within 28 °C (50 °F) of the average stack temperature. If the stack temperature varies by more than 28 °C (50 °F), then use the appropriate ΔH.

4.1.2.2.2 If the sizing device is a cyclone that does not meet the design specifications in Figure 3 of this method, use the equations in Figure 4 of this method, except use the procedures in Section 5.3 of this method to determine Q_s, the correct cyclone flow rate for a 10 µm size.

4.1.2.2.3 To select a nozzle, use the equations in Figure 5 of this method to calculate Δp_{min} and Δp_{max} for each nozzle at all three temperatures. If the sizing device is a cyclone that does not meet the design specifications in Figure 3 of this method, the example worksheets can be used.

4.1.2.2.4 Correct the Method 2 pitot readings to Method 201A pitot readings by multiplying the Method 2 pitot readings by the

square of a ratio of the Method 201A pitot coefficient to the Method 2 pitot coefficient. Select the nozzle for which Δp_{min} and Δp_{max} bracket all of the corrected Method 2 pitot readings. If more than one nozzle meets this requirement, select the nozzle giving the greatest symmetry. Note that if the expected pitot reading for one or more points is near a limit for a chosen nozzle, it may be outside the limits at the time of the run.

4.1.2.2.5 Vary the dwell time, or sampling time, at each traverse point proportionately with the point velocity. Use the equations in Figure 6 of this method to calculate the dwell time at the first point and at each subsequent point. It is recommended that the number of minutes sampled at each point be rounded to the nearest 15 seconds.

4.1.3 Preparation of Collection Train. Same as in Method 5, Section 4.1.3, except omit directions about a glass cyclone.

4.1.4 Leak-Check Procedure. The sizing device is removed before the post-test leak-check to prevent any disturbance of the collected sample prior to analysis.

4.1.4.1 Pretest Leak-Check. A pretest leak-check of the entire sampling train, including the sizing device, is required. Use the leak-check procedure in Method 5, Section 4.1.4.1 to conduct a pretest leak-check.

4.1.4.2 Leak-Checks During Sample Run. Same as in Method 5, Section 4.1.4.1.

4.1.4.3 Post-Test Leak-Check. A leak-check is required at the conclusion of each sampling run. Remove the cyclone before the leak-check to prevent the vacuum created by the cooling of the probe from disturbing the collected sample and use the procedure in Method 5, Section 4.1.4.3 to conduct a post-test leak-check.

4.1.5 Method 201A Train Operation. Same as in Method 5, Section 4.1.5, except use the procedures in this section for isokinetic sampling and flow rate adjustment. Maintain the flow rate calculated in Section 4.1.2.2.1 of this method throughout the run provided the stack temperature is within 28 °C (50 °F) of the temperature used to calculate ΔH. If stack temperatures vary by more than 28 °C (50 °F), use the appropriate ΔH value calculated in Section 4.1.2.2.1 of this method. Calculate the dwell time at each traverse point as in Figure 6 of this method.

4.2 Sample Recovery. If a cascade impactor is used, use the manufacturer's recommended procedures for sample recovery. If a cyclone is used, use the same sample recovery as that in Method 5, Section 4.2, except an increased number of sample recovery containers is required.

4.2.1 *Container Number 1* (In-Stack Filter). The recovery shall be the same as that for Container Number 1 in Method 5, Section 4.2.

4.2.3 *Container Number 2* (Cyclone or Large PM Catch). This step is optional. The anisokinetic error for the cyclone PM is theoretically larger than the error for the PM_{10} catch. Therefore, adding all the fractions to get a total PM catch is not as accurate as Method 5 or Method 201. Disassemble the cyclone and remove the nozzle to recover the large PM catch. Quantitatively recover the PM from the interior surfaces of the nozzle and cyclone, excluding the ''turn around'' cup and the interior surfaces of the exit tube. The recovery shall be the same as that for Container Number 2 in Method 5, Section 4.2.

4.2.4 *Container Number 3* (PM_{10}). Quantitatively recover the PM from all of the surfaces from the cyclone exit to the front half of the in-stack filter holder, including the ''turn around'' cup inside the cyclone and the interior surfaces of the exit tube. The recovery shall be the same as that for Container Number 2 in Method 5, Section 4.2.

4.2.6 *Container Number 4* (Silica Gel). The recovery shall be the same as that for Container Number 3 in Method 5, Section 4.2.

4.2.7 *Impinger Water.* Same as in Method 5, Section 4.2, under ''Impinger Water.''

4.3 Analysis. Same as in Method 5, Section 4.3, except handle Method 201A Container Number 1 like Container Number 1, Method 201A Container Numbers 2 and 3 like Container Number 2, and Method 201A Container Number 4 like Container Number 3. Use Figure 7 of this method to record the weights of PM collected. Use Figure 5–3 in Method 5, Section 4.3, to record the volume of water collected.

4.4 Quality Control Procedures. Same as in Method 5, Section 4.4.

4.5 PM_{10} Emission Calculation and Acceptability of Results. Use the procedures in section 6 to calculate PM_{10} emissions and the criteria in section 6.3.5 to determine the acceptability of the results.

5. Calibration

Maintain an accurate laboratory log of all calibrations.

5.1 Probe Nozzle, Pitot Tube, Metering System, Probe Heater Calibration, Temperature Gauges, Leak-check of Metering System, and Barometer. Same as in Method 5, Section 5.1 through 5.7, respectively.

5.2 Probe Cyclone and Nozzle Combinations. The probe cyclone and nozzle combinations need not be calibrated if both meet design specifications in Figures 2 and 3 of this method. If the nozzles do not meet design specifications, then test the cyclone and nozzle combinations for conformity with performance specifications (PS's) in Table 1 of this method. If the cyclone does not meet design specifications, then the cylcone and nozzle combination shall conform to the PS's and calibrate the cyclone to determine the relationship between flow rate, gas viscosity, and gas density. Use the procedures in Section 5.2 of this method to conduct PS tests and the procedures in Section 5.3 of this method to calibrate the cyclone. The purpose

of the PS tests are to conform that the cyclone and nozzle combination has the desired sharpness of cut. Conduct the PS tests in a wind tunnel described in Section 5.2.1 of this method and particle generation system described in Section 5.2.2 of this method. Use five particle sizes and three wind velocities as listed in Table 2 of this method. A minimum of three replicate measurements of collection efficiency shall be performed for each of the 15 conditions listed, for a minimum of 45 measurements.

5.2.1 Wind Tunnel. Perform the calibration and PS tests in a wind tunnel (or equivalent test apparatus) capable of establishing and maintaining the required gas stream velocities within 10 percent.

5.2.2 Particle Generation System. The particle generation system shall be capable of producing solid monodispersed dye particles with the mass median aerodynamic diameters specified in Table 2 of this method. Perform the particle size distribution verification on an integrated sample obtained during the sampling period of each test. An acceptable alternative is to verify the size distribution of samples obtained before and after each test, with both samples required to meet the diameter and monodispersity requirements for an acceptable test run.

5.2.2.1 Establish the size of the solid dye particles delivered to the test section of the wind tunnel by using the operating parameters of the particle generation system, and verify them during the tests by microscopic examination of samples of the particles collected on a membrane filter. The particle size, as established by the operating parameters of the generation system, shall be within the tolerance specified in Table 2 of this method. The precision of the particle size verification technique shall be at least ±0.5, µm, and particle size determined by the verification technique shall not differ by more than 10 percent from that established by the operating parameters of the particle generation system.

5.2.2.2 Certify the monodispersity of the particles for each test either by microscopic inspection of collected particles on filters or by other suitable monitoring techniques such as an optical particle counter followed by a multichannel pulse height analyzer. If the proportion of multiplets and satellites in an aerosol exceeds 10 percent by mass, the particle generation system is unacceptable for the purpose of this test. Multiplets are particles that are agglomerated, and satellites are particles that are smaller than the specified size range.

5.2.3 Schematic Drawings. Schematic drawings of the wind tunnel and blower system and other information showing complete procedural details of the test atmosphere generation, verification, and delivery techniques shall be furnished with calibration data to the reviewing agency.

5.2.4 Flow Measurements. Measure the cyclone air flow rates with a dry gas meter and a stopwatch, or a calibrated orifice system capable of measuring flow rates to within 2 percent.

5.2.5 Performance Specification Procedure. Establish test particle generator operation and verify particle size microscopically. If monodisperity is to be verified by measurements at the beginning and the end of the run rather than by an integrated sample, these measurements may be made at this time.

5.2.5.1 The cyclone cut size, or D_{50}, of a cyclone is defined here as the particle size having a 50 percent probability of penetration. Determine the cyclone flow rate at which D_{50} is 10 µm. A suggested procedure is to vary the cyclone flow rate while keeping a constant particle size of 10 µm. Measure the PM collected in the cyclone (m_c), the exit tube (m_t), and the filter (m_f). Calculate cyclone efficiency (E_c) for each flow rate as follows:

$$E_c = \frac{m_c}{(m_c + m_t + m_f)} \times 100$$

5.2.5.2. Do three replicates and calculate the average cyclone efficiency [$E_{c(avg)}$] as follows:

$$E_{c(avg)} = (E_1 + E_2 + E_3)/3$$

Where E_1, E_2, and E_3 are replicate measurements of E_c.

5.2.5.3 Calculate the standard deviation (σ) for the replicate measurements of E_c as follows:

$$\sigma = \left[\frac{(E_1^2 + E_2^2 + E_3^2) - \dfrac{(E_1 + E_2 + E_3)^2}{3}}{2} \right]^{1/2}$$

If σ exceeds 0.10, repeat the replicated runs.

5.2.5.4 Measure the overall efficiency of the cyclone and nozzle, E_o, at the particle sizes and nominal gas velocities in Table 2 of this method using the following procedure.

5.2.5.5 Set the air velocity and particle size from one of the conditions in Table 2 of this method. Establish isokinetic sampling conditions and the correct flow rate in the

cyclone (obtained by procedures in this section) such that the D_{50} is 10 µm. Sample long enough to obtain ±5 percent precision on total collected mass as determined by the precision and the sensitivity of measuring technique. Determine separately the nozzle catch (m_n), cyclone catch (m_c), cyclone exit tube (M_t), and collection filter catch (m_f) for each particle size and nominal gas velocity in Table 2 of this method. Calculate overall efficiency (E_o) as follows:

$$E_o = \frac{(m_n+m_c)}{(m_n+m_c+m_t+m_f)} \times 100$$

5.2.5.6 Do three replicates for each combination of gas velocity and particle size in Table 2 of this method. Use the equation below to calculate the average overall efficiency [$E_{o(avg)}$] for each combination following the procedures described in this section for determining efficiency.

$$E_{o(avg)}=(E_1+E_2+E_3)/3$$

Where E_1, E_2, and E_3 are replicate measurements of E_o.

5.2.5.7 Use the formula in Section 5.2.5.3 to calculate σ for the replicate measurements. If σ exceeds 0.10 or if the particle sizes and nominal gas velocities are not within the limits specified in Table 2 of this method, repeat the replicate runs.

5.2.6 Criteria for Acceptance. For each of the three gas stream velocities, plot the $E_{o(avg)}$ as a function of particle size on Figure 8 of this method. Draw smooth curves through all particle sizes. $E_{o(avg)}$ shall be within the banded region for all sizes, and the $E_{c(avg)}$ shall be 50±0.5 percent at 10 µm.

5.3 Cyclone Calibration Procedure. The purpose of this procedure is to develop the relationship between flow rate, gas viscosity, gas density, and D_{50}.

5.3.1 Calculate Cyclone Flow Rate. Determine flow rates and D_{50}'s for three different particle sizes between 5 µm and 15 µm, one of which shall be 10 µm. All sizes must be determined within 0.5 µm. For each size, use a different temperature within 60 °C (108 °F) of the temperature at which the cyclone is to be used and conduct triplicate runs. A suggested procedure is to keep the particle size constant and vary the flow rate.

5.3.1.1 On log-log graph paper, plot the Reynolds number (Re) on the abscissa, and the square root of the Stokes 50 number [$(Stk_{50})^{1/2}$] on the ordinate for each temperature. Use the following equations to compute both values:

$$Re = \frac{4\,\rho\,Q_{cyc}}{d_{cyc}\pi\,\mu_s}$$

$$(Stk_{50})^{1/2} = \left[\frac{4\,Q_{cyc}\,(D_{50})^2}{9\,\pi\,\mu_s)^3\,(d_{cyc})^3}\right]^{1/2}$$

where:

Q_{cyc}=Cyclone flow rate, cm^3/sec.
ρ=Gas density, g/cm^3.
d_{cyc}=Diameter of cyclone inlet, cm.
μ_s=Viscosity of stack gas, micropoise.
D_{50}=Aerodynamic diameter of a particle having a 50 percent probability of penetration, cm.

5.3.1.2 Use a linear regression analysis to determine the slope (m) and the Y-intercept (b). Use the following formula to determine Q, the cyclone flow rate required for a cut size of 10 µm.

$$Q_s = \frac{\pi\,\mu_s}{4}\left[(3000)(K_1)\text{-}b\right]^{-(0.5-m)}\left[\frac{T_s}{M_w\,P_s}\right]^{m/(m-0.5)} d^{(m-1.5)/(m-0.5)}$$

where:

m=Slope of the calibration line.
b=y-intercept of the calibration line.
Q_s=Cyclone flow rate for a cut size of 10 µm, cm^3/sec.
d=Diameter of nozzle, cm.
T_s=Stack gas temperature, °R.
P_s=Absolute stack pressure, in. Hg.
M_w=Wet molecular weight of the stack gas, lb/1b-mole.
$K_1=4.077\times10^{-3}$.

5.3.1.3 Refer to the Method 201A operators manual, entitled *Application Guide for Source PM_{10} Measurement with Constant Sampling Rate,* for directions in the use of this equation for Q in the setup calculations.

5.4 Cascade Impactor. The purpose of calibrating a cascade impactor is to determine the empirical constant (STK_{50}), which is specific to the impactor and which permits the accurate determination of the cut size of the impactor stages at field conditions. It is not necessary to calibrate each individual impactor. Once an impactor has been calibrated, the calibration data can be applied to other impactors of identical design.

5.4.1 Wind Tunnel. Same as in Section 5.2.1 of this method.

5.4.2 Particle Generation System. Same as in Section 5.2.2 of this method.

5.4.3 Hardware Configuration for Calibrations. An impaction stage constrains an aerosol to form circular or rectangular jets, which are directed toward a suitable substrate where the larger aerosol particles are collected. For calibration purposes, three stages of the cascade impactor shall be discussed and designated calibration stages 1, 2, and 3. The first calibration stage consists of the collection substrate of an impaction stage and all upstream surfaces up to and including the nozzle. This may include other preceding impactor stages. The second and third calibration stages consist of each respective collection substrate and all upstream surfaces up to but excluding the collection substrate of the preceding calibration stage. This may include intervening impactor stages which are not designated as calibration stages. The cut size, or D_{50}, of the adjacent calibration stages shall differ by a factor of not less than 1.5 and not more than 2.0. For example, if the first calibration stage has a D_{50} of 12 µm, then the D_{50} of the downstream stage shall be between 6 and 8 µm.

5.4.3.1 It is expected, but not necessary, that the complete hardware assembly will be used in each of the sampling runs of the calibration and performance determinations. Only the first calibration stage must be tested under isokinetic sampling conditions. The second and third calibration stages must be calibrated with the collection substrate of the preceding calibration stage in place, so that gas flow patterns existing in field operation will be simulated.

5.4.3.2 Each of the PM_{10} stages should be calibrated with the type of collection substrate, viscid material (such as grease) or glass fiber, used in PM_{10} measurements. Note that most materials used as substrates at elevated temperatures are not viscid at normal laboratory conditions. The substrate material used for calibrations should minimize particle bounce, yet be viscous enough to withstand erosion or deformation by the impactor jets and not interfere with the procedure for measuring the collected PM.

5.4.4 Calibration Procedure. Establish test particle generator operation and verify particle size microscopically. If monodispersity is to be verified by measurements at the beginning and the end of the run rather than by an integrated sample, these measurements shall be made at this time. Measure in triplicate the PM collected by the calibration stage (m) and the PM on all surfaces downstream of the respective calibration stage (m') for all of the flow rates and particle size combinations shown in Table 2 of this method. Techniques of mass measurement may include the use of a dye and spectrophotometer. Particles on the upstream side of a jet plate shall be included with the substrate downstream, except agglomerates of particles, which shall be included with the preceding or upstream substrate. Use the following formula to calculate the collection efficiency (E) for each stage.

5.4.4.1 Use the formula in Section 5.2.5.3 of this method to calculate the standard deviation (σ) for the replicate measurements. If σ exceeds 0.10, repeat the replicate runs.

5.4.4.2 Use the following formula to calculate the average collection efficiency (E_{avg}) for each set of replicate measurements.

$$E_{avg}=(E_1+E_2+E_3)/3$$

where E_1, E_2, and E_3 are replicate measurements of E.

5.4.4.3 Use the following formula to calculate Stk for each E_{avg}.

$$Stk=\frac{D^2 Q}{9 \mu A d_j}$$

where:

D=Aerodynamic diameter of the test particle, cm $(g/cm^3)^{1/2}$.

Q=Gas flow rate through the calibration stage at inlet conditions, cm^3/sec.

µ=Gas viscosity, micropoise.

A=Total cross-sectional area of the jets of the calibration stage, cm^2.

d_j=Diameter of one jet of the calibration stage, cm.

5.4.4.4 Determine Stk_{50} for each calibration stage by plotting E_{avg} versus Stk on log-log paper. Stk_{50} is the Stk number at 50 percent efficiency. Note that particle bounce can cause efficiency to decrease at high values of Stk. Thus, 50 percent efficiency can occur at multiple values of Stk. The calibration data should clearly indicate the value of Stk_{50} for minimum particle bounce. Impactor efficiency versus Stk with minimal particle bounce is characterized by a monotonically increasing function with constant or increasing slope with increasing Stk.

5.4.4.5 The Stk_{50} of the first calibration stage can potentially decrease with decreasing nozzle size. Therefore, calibrations should be performed with enough nozzle sizes to provide a measured value within 25 percent of any nozzle size used in PM_{10} measurements.

5.4.5 Criteria For Acceptance. Plot E_{avg} for the first calibration stage versus the square root of the ratio of Stk to Stk_{50} on Figure 9 of this method. Draw a smooth curve through all of the points. The curve shall be within the banded region.

6. Calculations

Calculations are as specified in Method 5, sections 6.3 through 6.7, and 6.9 through 6.11, with the addition of the following:

6.1 Nomenclature.

B_{ws}=Moisture fraction of stack, by volume, dimensionless.

C_1=Viscosity constant, 51.12 micropoise for °K (51.05 micropoise for °R).

C_2=Viscosity constant, 0.372 micropoise/°K (0.207 micropoise/°R).

C_3=Viscosity constant, 1.05×10^{-4} micropoise/°K² (3.24×10^{-5} micropoise/°R²).

C_4=Viscosity constant, 53.147 micropoise/fraction O_2.

C_5=Viscosity constant, 74.143 micropoise/fraction H_2O.

D_{50}=Diameter of particles having a 50 percent probability of penetration, µm.

f_o=Stack gas fraction O_2, by volume, dry basis.

K_1=0.3858 °K/mm Hg (17.64 °R/in. Hg).

M_w=Wet molecular weight of stack gas, g/g-mole (lb/lb-mole).

M_d=Dry molecular weight of stack gas, g/g-mole (1b/1b-mole).

P_{bar}=Barometric pressure at sampling site, mm Hg (in. Hg).

P_s=Absolute stack pressure, mm Hg (in. Hg).

Q_s=Total cyclone flow rate at wet cyclone conditions, m³/min (ft³/min).

$Q_{s(std)}$=Total cyclone flow rate at standard conditions, dscm/min (dscf/min).

T_m=Average absolute temperature of dry meter, °K (°R).

T_s=Average absolute stack gas temperature, °K (°R).

$V_{w(std)}$=Volume of water vapor in gas sample (standard conditions), scm (scf).

θ=Total sampling time, min.

μ_s=Viscosity of stack gas, micropoise.

6.2 Analysis of Cascade Impactor Data. Use the manufacturer's recommended procedures to analyze data from cascade impactors.

6.3 Analysis of Cyclone Data. Use the following procedures to analyze data from a single stage cyclone.

6.3.1 PM_{10} Weight. Determine the PM catch in the PM_{10} range from the sum of the weights obtained from Container Numbers 1 and 3 less the acetone blank.

6.3.2 Total PM Weight (optional). Determine the PM catch for greater than PM_{10} from the weight obtained from Container Number 2 less the acetone blank, and add it to the PM_{10} weight.

6.3.3 PM_{10} Fraction. Determine the PM_{10} fraction of the total particulate weight by dividing the PM_{10} particulate weight by the total particulate weight.

6.3.4 Aerodynamic Cut Size. Calculate the stack gas viscosity as follows:

$$\mu_s=C_1+C_2T_s+C_3T_s^2+C_4f_{02}-C_5B_{ws}$$

6.3.4.1 The PM_{10} flow rate, at actual cyclone conditions, is calculated as follows:

$$Q_s=\frac{T_s}{K_1\ P_s}\left[Q_{s(std)}+\frac{V_{w(std)}}{\theta}\right]$$

6.3.4.2 Calculate the molecular weight on a wet basis of the stack gas as follows:

$$M_w=M_d(1-B_{ws})+18.0(B_{ws})$$

6.3.4.3 Calculate the actual D_{50} of the cyclone for the given conditions as follows:

$$D_{50}=\beta_1\left[\frac{T_s}{M_w\ P_s}\right]^{0.2091}\left[\frac{\mu_s}{Q_s}\right]^{0.7091}$$

where β_1=0.027754 for metric units (0.15625 for English units).

6.3.5 Acceptable Results. The results are acceptable if two conditions are met. The first is that 9.0 µm ≤ D_{50} ≤ 11.0 µm. The second is that no sampling points are outside Δp_{min} and Δp_{max}, or that 80 percent ≤ I ≤ 120 percent and no more than one sampling point is outside Δp_{min} and Δp_{max}. If D_{50} is less than 9.0 µm, reject the results and repeat the test.

7. Bibliography

1. Same as Bibliography in Method 5.

2. McCain, J.D., J.W. Ragland, and A.D. Williamson. Recommended Methodology for the Determination of Particle Size Distributions in Ducted Sources, Final Report. Prepared for the California Air Resources Board by Southern Research Institute. May 1986.

3. Farthing, W.E., S.S. Dawes, A.D. Williamson, J.D. McCain, R.S. Martin, and J.W. Ragland. Development of Sampling Methods for Source PM_{10} Emissions. Southern Research Institute for the Environmental Protection Agency. April 1989. NTIS PB 89 190375, EPA/600/3–88–056.

4. *Application Guide for Source PM_{10} Measurement with Constant Sampling Rate*, EPA/600/3–88–057.

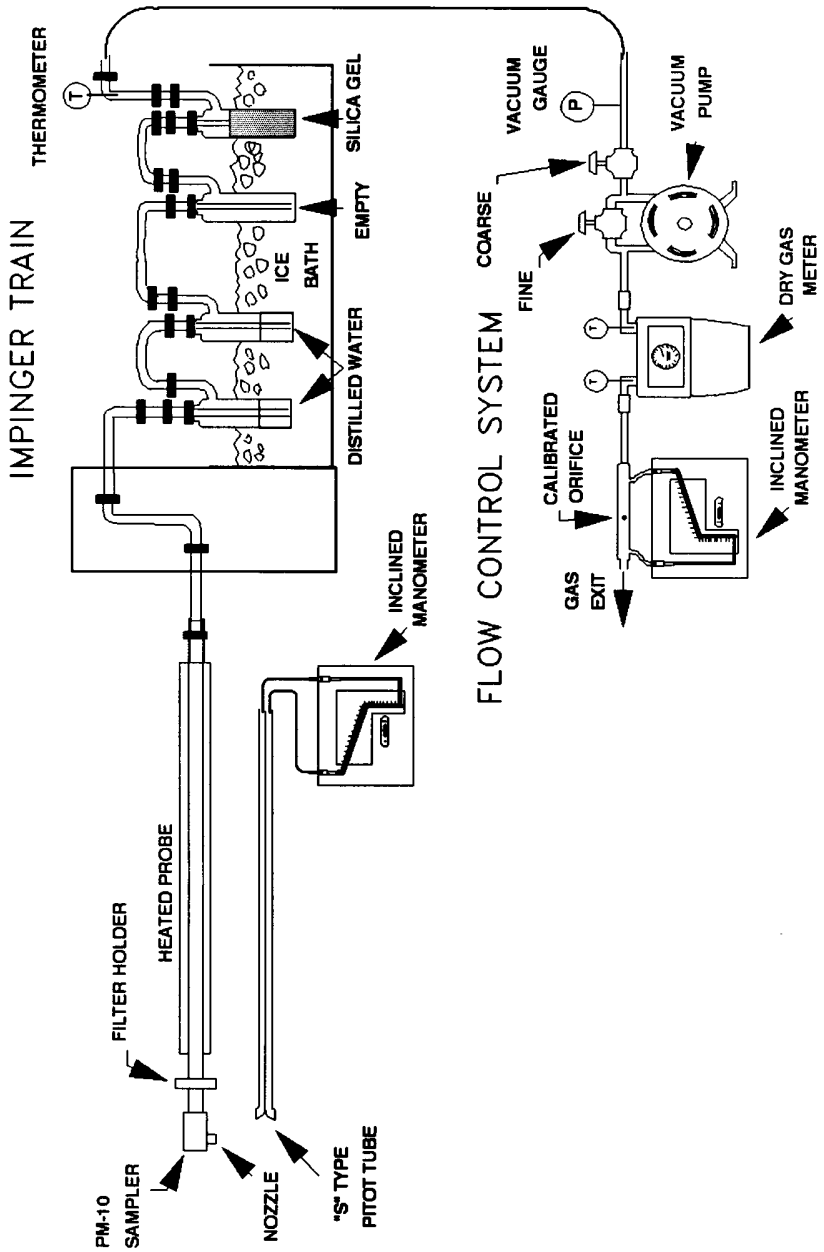

Figure 1. CSR Sampling Train

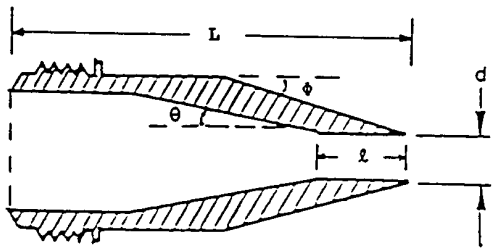

Nozzle Diameter (inches)	Cone Angle, θ (degrees)	Outside taper, φ (degrees)	Straight inlet length, ℓ (inches)	Total Length L (inches)
0.136	4	15	<0.05	2.653±0.05
0.150	4	15	<0.05	2.553±0.05
0.164	5	15	<0.05	1.970±0.05
0.180	6	15	<0.05	1.572±0.05
0.197	6	15	<0.05	1.491±0.05
0.215	6	15	<0.05	1.45 ±0.05
0.233	6	15	<0.05	1.45 ±0.05
0.264	5	15	<0.05	1.45 ±0.05
0.300	4	15	<0.05	1.48 ±0.05
0.342	4	15	<0.05	1.45 ±0.05
0.390	3	15	<0.05	1.45 ±0.05

Figure 2. Nozzle design specifications.

Cyclone Interior Dimensions

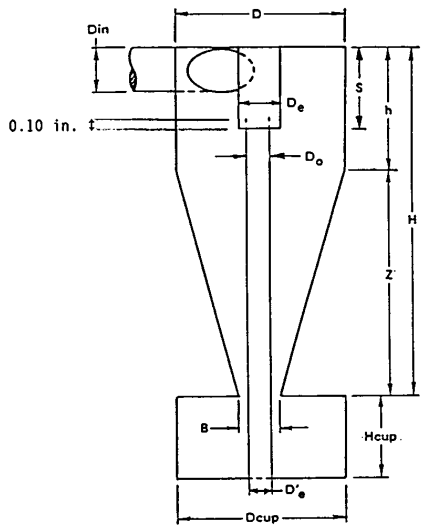

	Dimensions (±0.02 cm, ±0.01 in.)											
	Din	D	De	B	H	h	Z	S	Hcup	Dcup	D'_e	D_o
cm	1.27	4.47	1.50	1.88	6.95	2.24	4.71	1.57	2.25	4.45	1.02	1.24
inches	0.50	1.76	0.59	0.74	2.74	0.88	1.85	0.62	0.89	1.75	0.40	0.49

Figure 3. Cyclone design specifications.

Barometric pressure,
P_{bar}, in. Hg= _____
Stack static pressure,
P_g, in. H_2O= _____
Average stack temperature,
t_s, °F= _____
Meter temperature, t_m, °F= _____
Orifice $\Delta H_@$, in. H_2O= _____
Gas analysis:
$\%CO_2$= _____
$\%O_2$= _____
$\%N_2+\%CO$= _____
Fraction moisture content,
B_{ws}= _____
Molecular weight of stack gas, dry basis:

M_d=0.44 ($\%CO_2$)+0.32 ($\%O_2$)+0.28 ($\%N_2+\%CO$)= _____ lb/lb mole

Molecular weight of stack gas, wet basis:

$M_w=M_d\ (1-B_{ws})+18\ (B_{ws})$= _____ lb/lb mole

Absolute stack pressure:

$$P_s=P_{bar}+\frac{P_g}{13.6} = _____ \text{ in. Hg}$$

Viscosity of stack gas:

μ_s=152.418+0.2552 t_s+3.2355×10^{-5} t_s^2+0.53147 ($\%0_2$)-74.143 B_{ws}= _____ micropoise

Cyclone flow rate:

$$Q_s=0.002837\ \mu_s \left[\frac{(t_s+460)}{M_w\ P_s}\right]^{0.2949} = _____ \text{ ft}^3\text{/min}$$

Figure 4. Example worksheet 1, cyclone flow rate and ΔH.

Orifice pressure head (ΔH) needed for cyclone flow rate:

$$\Delta H = \left[\frac{Q_s\ (1-B_{ws})\ P_s}{t_s+460}\right]^2 \frac{t_{m+460}\ M_d\ 1.083\ \Delta H_@}{P_{bar}} = _____ \text{ in. } H_2O$$

Calculate ΔH for three temperatures:

t_s, °F			
ΔH, in. H_2O			

Stack viscosity, μ_s,
micropoise = _____
Absolute stack pressure,
P_s, in. Hg = _____
Average stack temperature,
t_s, °F = _____
Meter temperature, t_m, °F = _____

Method 201A pitot coefficient,
C_p = _____
Cyclone flow rate, ft^3/min,
Q_s = _____
Method 2 pitot coefficient,
C_p' = _____
Molecular weight of stack gas, wet basis,
M_w = _____
Nozzle diameter, D_n, in. = _____
Nozzle velocity:

$$v_n = \frac{3.056\ Q_s}{D_n^2} = _____ \text{ ft/sec}$$

$$v_{min} = v_n \left[0.2457 + \left[0.3072 - \frac{0.2603\ Q_s{}^{1/2}\ \mu_s}{v_n^{1.5}}\right]^{1/2}\right] = _____ \text{ ft/sec}$$

$$v_{max} = v_n \left[0.4457 + \left[0.5690 - \frac{0.2603\ Q_s{}^{1/2}\ \mu_s}{v_n^{1.5}}\right]^{1/2}\right] = _____ \text{ ft/sec}$$

Maximum and minimum velocities:
Calculate R_{min}

$$R_{min} = 0.2457 + 0.3072 - \frac{0.2603(\sqrt{Q_s})\ \mu_s}{v_n 1.5} = ____$$

If R_{min} is less than 0.5, *or* if an imaginary number occurs when calculating R_{min}, use Equation 1 to calculate v_{min}. Otherwise, use Equation 2.

Eq. 1 $v_{min} = v_n\ (0.5)$ = ____ ft/sec
Eq. 2 $v_{min} = v_n\ R_{min}$ = ____ ft/sec

Calculate R_{max}.

$R_{max} = 0.4457 +$

$$0.5690 + \frac{0.2603\,(\sqrt{Q_s})\,\mu_s}{v_n 1.5} = ____$$

If R_{max} is greater than 1.5, use Equation 3 to calculate v_{max}. Otherwise, use Equation 4.

Eq. 3 $v_{max} = v_n\,(1.5) =$ ____ ft/sec

Eq. 4 $v_{max} = v_n\,R_{max} =$ ____ ft/sec

Figure 5. Example worksheet 2, nozzle selection.

Maximum and minimum velocity head values:

$$\Delta p_{min} = 1.3686 \times 10^{-4} \frac{P_s\,M_w\,(v_{min})^2}{(t_s + 460)\,C_p^2} = _____ \text{ in. } H_2O$$

$$\Delta p_{max} = 1.3686 \times 10^{-4} \frac{P_s\,M_w\,(v_{max})^2}{(t_s + 460)\,C_p^2} = _____ \text{ in. } H_2O$$

Nozzle No.				
D_n, in.	.....	.....	.....	.....
v_n, ft/sec	.....	.....	.....	.....
v_{min}, ft/sec	.....	.....	.....	.....
v_{max}, ft/sec	.....	.....	.....	.....

Nozzle No.				
Δp_{min}, in. H_2O	.....	.....	.....	.....
Δp_{max}, in. H_2O	.....	.....	.....	.....

Velocity traverse data:

$$\Delta p(\text{Method 201A}) = \Delta p(\text{Method 2}) \left[\frac{C_p}{C_p'}\right]^2$$

Total run time, minutes = _____

Number of traverse points =

$$t_1 = \left[\frac{\Delta p'_1}{\Delta p'_{avg}}\right]^{1/2} \frac{(\text{Total run time})}{(\text{Number of points})}$$

where:

t_1=dwell time at first traverse point, minutes.

$\Delta p'_1$=the velocity head at the first traverse point (from a previous traverse), in. H_20.

$\Delta p'_{avg}$=the square of the average square root of the Δp's (from a previous velocity traverse), in. H_20.

At subsequent traverse points, measure the velocity Δp and calculate the dwell time by using the following equation:

$$t_n = \frac{t_1}{(\Delta p_1)^{1/2}} (\Delta p_n)^{1/2}, \; n=2,3,* * * \text{ total number of sampling points}$$

where:

t_n=dwell time at traverse point n, minutes.

Δp_n=measured velocity head at point n, in. H_20.

Δp_1=measured velocity head at point 1 in. H_20.

Figure 6. Example worksheet 3, dwell time.

Point No.	Port							
	Δp	t	Δp	t	Δp	t	Δp	t
1	.....	.....	.....	.....	.....	.....	.....	.....
2	.....	.....	.....	.....	.....	.....	.....	.....
3	.....	.....	.....	.....	.....	.....	.....	.....
4	.....	.....	.....	.....	.....	.....	.....	.....
5	.....	.....	.....	.....	.....	.....	.....	.....
6	.....	.....	.....	.....	.....	.....	.....	.....

Plant _____
Date _____
Run no. _____
Filter no. _____
Amount of liquid lost during transport _____
Acetone blank volume, ml _____
Acetone wash volume, ml (4) _____ (5) _____
Acetone blank conc., mg/mg (Equation 5–4, Method 5) _____
Acetone wash blank, mg (Equation 5–5, Method 5) _____

Container No.	Weight of PM_{10} (mg)		
	Final weight	Tare weight	Weight gain
1	.....	.....	.....
3	.....	.....	.....
Total	.....	.....	.....
Less acetone blank	.....	.....	.....
Weight of PM_{10}	.....	.....	.....

Figure 7. Method 201A analysis sheet.

TABLE 1.—PERFORMANCE SPECIFICATIONS FOR SOURCE PM_{10} CYCLONES AND NOZZLE COMBINATIONS

Parameter	Units	Specifications
1. Collection efficiency.	Percent	Such that collection efficiency falls within envelope specified by Section 5.2.6 and Figure 8.
2. Cyclone cut size (D_{50}).	µm	10±1 µm aerodynamic diameter.

TABLE 2.—PARTICLE SIZES AND NOMINAL GAS VELOCITIES FOR EFFICIENCY

Particle size (µm)[a]	Target gas velocities (m/sec)		
	7±1.0	15±1.5	25±2.5
5±0.5	.....	.....	.....
7±0.5	.....	.....	.....
10±0.5	.....	.....	.....
14±1.0	.....	.....	.....
20±1.0	.....	.....	.....

([a]) Mass median aerodynamic diameter.

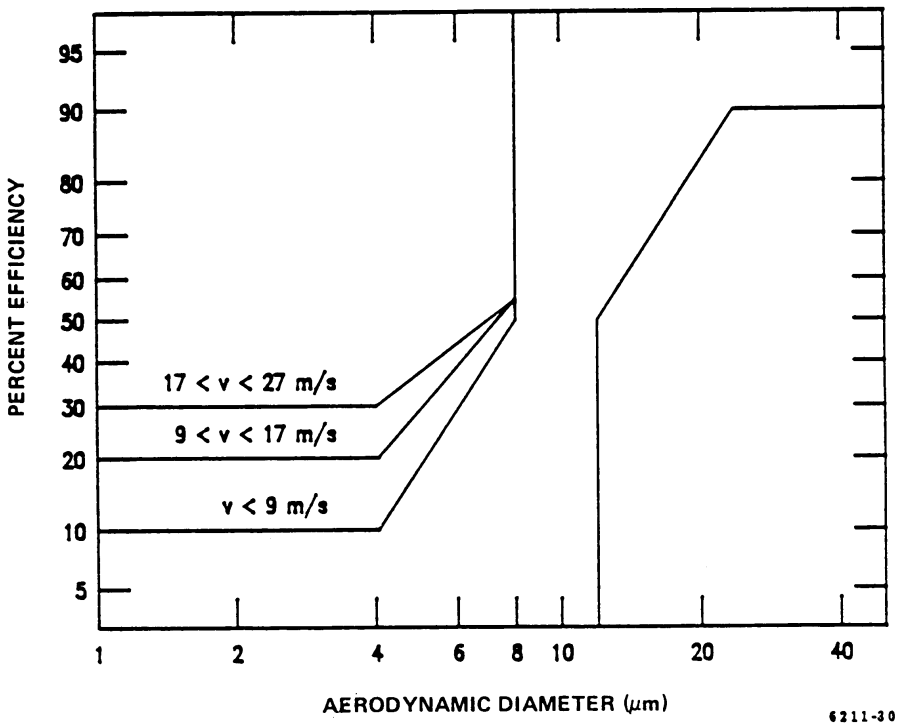

Figure 8. Efficiency envelope for the PM_{10} cyclone.

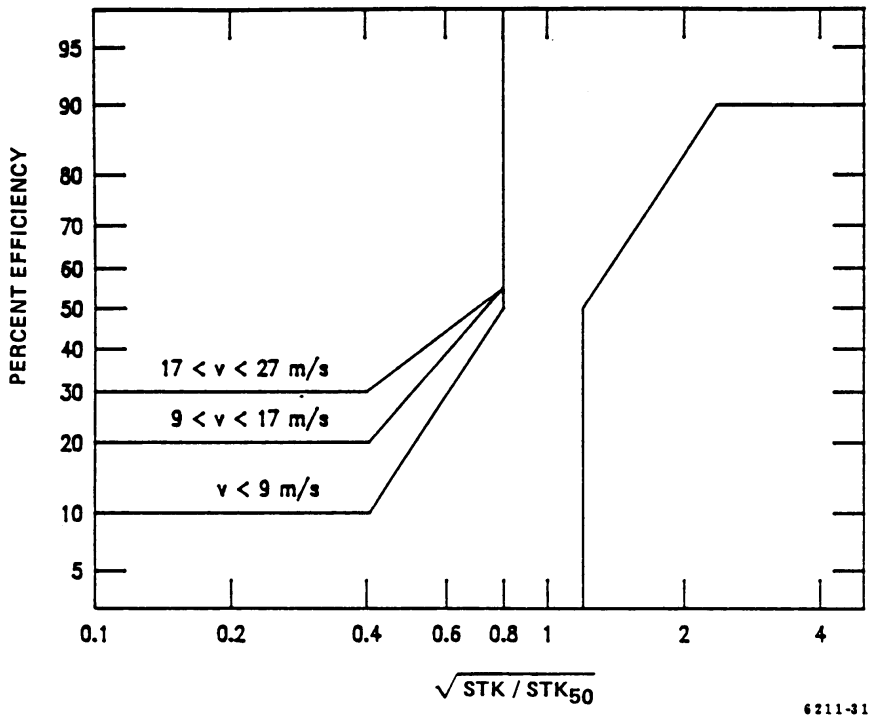

Figure 9. Efficiency envelope for first calibration stage.

[55 FR 14249, Apr. 17, 1990; 55 FR 24687, June 18, 1990, as amended at 55 FR 37607, Sept. 10, 1990; 56 FR 6278, Feb. 15, 1991]

METHOD 202—DETERMINATION OF CONDENSIBLE PARTICULATE EMISSIONS FROM STATIONARY SOURCES

1. Applicability and Principle

1.1 Applicability. 1.1.1 This method applies to the determination of condensible particulate matter (CPM) emissions from stationary sources. It is intended to represent condensible matter as material that condenses after passing through a filter and as measured by this method (Note: The filter catch can be analyzed according to the appropriate method).

1.1.2 This method may be used in conjunction with Method 201 or 201A if the probes are glass-lined. Using Method 202 in conjunction with Method 201 or 201A, only the impinger train configuration and analysis is addressed by this method. The sample train operation and front end recovery and analysis shall be conducted according to Method 201 or 201A.

1.1.3 This method may also be modified to measure material that condenses at other temperatures by specifying the filter and probe temperature. A heated Method 5 out-of-stack filter may be used instead of the in-stack filter to determine condensible emissions at wet sources.

1.2 Principle. 1.2.1 The CPM is collected in the impinger portion of a Method 17 (appendix A, 40 CFR part 60) type sampling train. The impinger contents are immediately purged after the run with nitrogen (N_2) to remove dissolved sulfur dioxide (SO_2) gases from the impinger contents. The impinger solution is then extracted with methylene chloride ($MeCl_2$). The organic and aqueous fractions are then taken to dryness and the residues weighed. The total of both fractions represents the CPM.

1.2.2 The potential for low collection efficiency exist at oil-fired boilers. To improve the collection efficiency at these type of sources, an additional filter placed between the second and third impinger is recommended.

2. Precision and Interference

2.1 Precision. The precision based on method development tests at an oil-fired boiler and a catalytic cracker were 11.7 and 4.8 percent, respectively.

2.2 Interference. Ammonia. In sources that use ammonia injection as a control technique for hydrogen chloride (HC1), the ammonia interferes by reacting with HC1 in the gas stream to form ammonium chloride (NH_4C1) which would be measured as CPM. The sample may be analyzed for chloride and the equivalent amount of NH_4C1 can be subtracted from the CPM weight. However, if NH_4C1 is to be counted as CPM, the inorganic fraction should be taken to near dryness (less than 1 ml liquid) in the oven and then allowed to air dry at ambient temperature to prevent any NH_4C1 from vaporizing.

3. Apparatus

3.1 Sampling Train. Same as in Method 17, section 2.1, with the following exceptions noted below (see Figure 202–1). *Note:* Mention of trade names or specific products does not constitute endorsement by EPA.

3.1.1 The probe extension shall be glass-lined or Teflon.

3.1.2 Both the first and second impingers shall be of the Greenburg-Smith design with the standard tip.

3.1.3 All sampling train glassware shall be cleaned prior to the test with soap and tap water, water, and rinsed using tap water, water, acetone, and finally, $MeCl_2$. It is important to completely remove all silicone grease from areas that will be exposed to the $MeCl_2$ during sample recovery.

3.2 Sample Recovery. Same as in Method 17, section 2.2, with the following additions:

3.2.1 N_2 Purge Line. Inert tubing and fittings capable of delivering 0 to 28 liters/min of N_2 gas to the impinger train from a standard gas cylinder (see Figure 202–2). Standard 0.95 cm (⅜-inch) plastic tubing and compression fittings in conjunction with an adjustable pressure regulator and needle valve may be used.

3.2.2 Rotameter. Capable of measuring gas flow at 20 liters/min.

3.3 Analysis. The following equipment is necessary in addition to that listed in Method 17, section 2.3:

3.3.1 Separatory Funnel. Glass, 1-liter.

3.3.2 Weighing Tins. 350-ml.

3.3.3 Dry Equipment. Hot plate and oven with temperature control.

3.3.4 Pipets. 5-ml.

3.3.5 Ion Chromatograph. Same as in Method 5F, Section 2.1.6.

4. Reagents

Unless otherwise indicated, all reagents must conform to the specifications established by the Committee on Analytical Reagents of the American Chemical Society. Where such specifications are not available, use the best available grade.

4.1 Sampling. Same as in Method 17, section 3.1, with the addition of deionized distilled water to conform to the American Society for Testing and Materials Specification D 1193–74, Type II and the omittance of section 3.1.4.

4.2 Sample Recovery. Same as in Method 17, section 3.2, with the following additions:

4.2.1 N_2 Gas. Zero N_2 gas at delivery pressures high enough to provide a flow of 20 liters/min for 1 hour through the sampling train.

4.2.2 Methylene Chloride, ACS grade. Blanks shall be run prior to use and only

methylene chloride with low blank values (0.001 percent) shall be used.

4.2.3 Water. Same as in section 4.1.

4.3 Analysis. Same as in Method 17, section 3.3, with the following additions:

4.3.1 Methylene Chloride. Same as section 4.2.2.

4.3.2 Ammonium Hydroxide. Concentrated (14.8 M) NH_4OH.

4.3.3 Water. Same as in section 4.1.

4.3.4 Phenolphthalein. The pH indicator solution, 0.05 percent in 50 percent alcohol.

5. Procedure

5.1 Sampling. Same as in Method 17, section 4.1, with the following exceptions:

5.1.1 Place 100 ml of water in the first three impingers.

5.1.2 The use of silicone grease in train assembly is not recommended because it is very soluble in $MeCl_2$ which may result in sample contamination. Teflon tape or similar means may be used to provide leak-free connections between glassware.

5.2 Sample Recovery. Same as in Method 17, section 4.2 with the addition of a post-test N_2 purge and specific changes in handling of individual samples as described below.

5.2.1 Post-test N_2 Purge for Sources Emitting SO_2. (Note: This step is recommended, but is optional. With little or no SO_2 is present in the gas stream, i.e., the pH of the impinger solution is greater than 4.5, purging has been found to be unnecessary.) As soon as possible after the post-test leak check, detach the probe and filter from the impinger train. Leave the ice in the impinger box to prevent removal of moisture during the purge. If necessary, add more ice during the purge to maintain the gas temperature below 20 °C. With no flow of gas through the clean purge line and fittings, attach it to the input of the impinger train (see Figure 202–2). To avoid over- or underpressurizing the impinger array, slowly commence the N_2 gas flow through the line while simultaneously opening the meter box pump valve(s). When using the gas cylinder pressure to push the purge gas through the sample train, adjust the flow rate to 20 liters/min through the rotameter. When pulling the purge gas through the sample train using the meter box vacuum pump, set the orifice pressure differential to $\Delta H_@$ and maintain an overflow rate through the rotameter of less than 2 liters/min. This will guarantee that the N_2 delivery system is operating at greater than ambient pressure and prevents the possibility of passing ambient air (rather than N_2) through the impingers. Continue the purge under these conditions for 1 hour, checking the rotameter and ΔH value(s) periodically. After 1 hour, simultaneously turn off the delivery and pumping systems.

5.2.2 Sample Handling.

5.2.2.1 Container Nos. 1, 2, and 3. If filter catch is to be determined, as detailed in Method 17, section 4.2.

5.2.2.2 Container No. 4 (Impinger Contents). Measure the liquid in the first three impingers to within 1 ml using a clean graduated cylinder or by weighing it to within 0.5 g using a balance. Record the volume or weight of liquid present to be used to calculate the moisture content of the effluent gas. Quantitatively transfer this liquid into a clean sample bottle (glass or plastic); rinse each impinger and the connecting glassware, including probe extension, twice with water, recover the rinse water, and add it to the same sample bottle. Mark the liquid level on the bottle.

5.2.2.3 Container No. 5 ($MeCl_2$ Rinse). Follow the water rinses of each impinger and the connecting glassware, including the probe extension with two rinses of $MeCl_2$; save the rinse products in a clean, glass sample jar. Mark the liquid level on the jar.

5.2.2.4 Container No. 6 (Water Blank). Once during each field test, place 500 ml of water in a separate sample container.

5.2.2.5 Container No. 7 ($MeCl_2$ Blank). Once during each field test, place in a separate glass sample jar a volume of $MeCl_2$ approximately equivalent to the volume used to conduct the $MeCl_2$ rinse of the impingers.

5.3 Analysis. Record the data required on a sheet such as the one shown in Figure 202–3. Handle each sample container as follows:

5.3.1 Container Nos. 1, 2, and 3. If filter catch is analyzed, as detailed in Method 17, section 4.3.

5.3.2 Container Nos. 4 and 5. Note the level of liquid in the containers and confirm on the analytical data sheet whether leakage occurred during transport. If a noticeable amount of leakage has occurred, either void the sample or use methods, subject to the approval of the Administrator, to correct the final results. Measure the liquid in Container No. 4 either volumetrically to ±1 ml or gravimetrically to ±0.5 g. Remove a 5-ml aliquot and set aside for later ion chromatographic (IC) analysis of sulfates. (Note: Do not use this aliquot to determine chlorides since the HCl will be evaporated during the first drying step; Section 8.2 details a procedure for this analysis.)

5.3.2.1 Extraction. Separate the organic fraction of the sample by adding the contents of Container No. 4 ($MeCl_2$) to the contents of Container No. 4 in a 1000-ml separatory funnel. After mixing, allow the aqueous and organic phases to fully separate, and drain off most of the organic/$MeCl_2$ phase. Then add 75 ml of $MeCl_2$ to the funnel, mix well, and drain off the lower organic phase. Repeat with another 75 ml of $MeCl_2$. This extraction should yield about 250 ml of organic extract. Each time, leave a small amount of the organic/$MeCl_2$ phase in the separatory funnel ensuring that no water is

collected in the organic phase. Place the organic extract in a tared 350-ml weighing tin.

5.3.2.2 Organic Fraction Weight Determination (Organic Phase from Container Nos. 4 and 5). Evaporate the organic extract at room temperature and pressure in a laboratory hood. Following evaporation, desiccate the organic fraction for 24 hours in a desiccator containing anhydrous calcium sulfate. Weigh to a constant weight and report the results to the nearest 0.1 mg.

5.3.2.3 Inorganic Fraction Weight Determination. (Note: If NH_4Cl is to be counted as CPM, the inorganic fraction should be taken to near dryness (less than 1 ml liquid) in the oven and then allow to air dry at ambient temperature. If multiple acid emissions are suspected, the ammonia titration procedure in section 8.1 may be preferred.) Using a hot plate, or equivalent, evaporate the aqueous phase to approximately 50 ml; then, evaporate to dryness in a 105 °C oven. Redissovle the residue in 100 ml of water. Add five drops of phenolphthalein to this solution; then, add concentrated (14.8 M) NH_4OH until the sample turns pink. Any excess NH_2OH will be evaporated during the drying step. Evaporate the sample to dryness in a 105 °C oven, desiccate the sample for 24 hours, weigh to a constant weight, and record the results to the nearest 0.1 mg. (Note: The addition of NH_4OH is recommended, but is optional when little or no SO_2 is present in the gas stream, i.e., when the pH of the impinger solution is greater than 4.5, the addition of NH_4OH is not necessary.)

5.3.2.4 Analysis of Sulfate by IC to Determine Ammonium Ion (NH_4^+) Retained in the Sample. (Note: If NH_4OH is not added, omit this step.) Determine the amount of sulfate in the aliquot taken from Container No. 4 earlier as described in Method 5F (appendix A, 40 CFR part 60). Based on the IC SO_4^{-2} analysis of the aliquot, calculate the correction factor to subtract the NH_4^+ retained in the sample and to add the combined water removed by the acid-base reaction (see section 7.2).

5.3.3 Analysis of Water and $MeCl_2$ Blanks (Container Nos. 6 and 7). Analyze these sample blanks as described above in sections 5.3.2.3 and 5.3.2.2, respectively.

5.3.4 Analysis of Acetone Blank (Container No. 8). Same as in Method 17, section 4.3.

6. Calibration

Same as in Method 17, section 5, except for the following:

6.1 IC Calibration. Same as Method 5F, section 5.

6.2 Audit Procedure. Concurrently, analyze the audit sample and a set of compliance samples in the same manner to evaluate the technique of the analyst and the standards preparation. The same analyst, analytical reagents, and analytical system shall be used both for compliance samples and the EPA audit sample. If this condition is met, auditing of subsequent compliance analyses for the same enforcement agency within 30 days is not required. An audit sample set may not be used to validate different sets of compliance samples under the jurisdiction of different enforcement agencies, unless prior arrangements are made with both enforcement agencies.

6.3 Audit Samples. Audit Sample Availability. Audit samples will be supplied only to enforcement agencies for compliance tests. The availability of audit samples may be obtained by writing:

Source Test Audit Coordinator (MD–77B), Quality Assurance Division, Atmospheric Research and Exposure Assessment Laboratory, U.S. Environmental Protection Agency, Research Triangle, Park, NC 27711

or by calling the Source Test Audit Coordinator (STAC) at (919) 541–7834. The request for the audit sample must be made at least 30 days prior to the scheduled compliance sample analysis.

6.4 Audit Results. Calculate the audit sample concentration according to the calculation procedure described in the audit instructions included with the audit sample. Fill in the audit sample concentration and the analyst's name on the audit response form included with the audit instructions. Send one copy to the EPA Regional Office or the appropriate enforcement agency and a second copy to the STAC. The EPA Regional Office or the appropriate enforcement agency will report the results of the audit to the laboratory being audited. Include this response with the results of the compliance samples in relevant reports to the EPA Regional Office or the appropriate enforcement agency.

7. Calculations

Same as in Method 17, section 6, with the following additions:

7.1 Nomenclature. Same as in Method 17, section 6.1 with the following additions.

C_{cpm}=Concentration of the CPM in the stack gas, dry basis, corrected to standard conditions, g/dscm (g/dscf).

C_{SO4}=Concentration of SO_4^{-2} in the sample, mg/ml.

m_b=Sum of the mass of the water and $MeCl_2$ blanks, mg.

m_c=Mass of the NH_4^+ added to sample to form ammonium sulfate, mg.

m_i=Mass of inorganic CPM matter, mg.

m_o=Mass of organic CPM, mg.

m_r=Mass of dried sample from inorganic fraction, mg.

V_b=Volume of aliquot taken for IC analysis, ml.

V_{ic}=Volume of impinger contents sample, ml.

7.2 Correction for NH_4^+ and H_2O. Calculate the correction factor to subtract the

NH_4^+ retained in the sample based on the IC SO_4^{-2} and if desired, add the combined water removed by the acid-base reaction.

$$m_c = K\ C_{so2}\ V_{ic} \qquad \text{Eq. 202–1}$$

where:

K=0.0205, when correcting for NH_4^+ and H_2O.
=0.1840, when only correcting for NH_4^+.

7.3 Mass of Inorganic CPM.

$$m_i = m_r \frac{V_{ic}}{V_{ic} - V_b} - m_c \qquad \text{Eq. 202–2}$$

7.4 Concentration of CPM.

$$C_{cpm} = \frac{m_o + m_i - m_b}{VM_{std}} \qquad \text{Eq. 202–3}$$

8. Alternative Procedures

8.1 Determination of NH_4^+ Retained in Sample by Titration.

8.1.1 An alternative procedure to determine the amount of NH_4^+ added to the inorganic fraction by titration may be used. After dissolving the inorganic residue in 100 ml of water, titrate the solution with 0.1 N NH_4OH to a pH of 7.0, as indicated by a pH meter. The 0.1 N NH_4OH is made as follows: Add 7 ml of concentrated (14.8 M) NH_4OH to 1 liter of water. Standardize against standardized 0.1 N H_2SO_4 and calculate the exact normality using a procedure parallel to that described in section 5.5 of Method 6 (appendix A, 40 CFR part 60). Alternatively, purchase 0.1 N NH_4OH that has been standardized against a National Institute of Standards and Technology reference material.

8.1.2 Calculate the concentration of SO_4^{-2} in the sample using the following equation.

$$CSO_4 = \frac{48.03\ V_t N}{100} \qquad \text{Eq. 202–4}$$

where

N=Normality of the NH_4OH, mg/ml.
V_t=Volume of NH_4OH titrant, ml.
48.03=mg/meq.
100=Volume of solution, ml.

8.3.1 Calculate the CPM as described in section 7.

8.2 Analysis of Chlorides by IC. At the conclusion of the final weighing as described in section 5.3.2.3, redissolve the inorganic fraction in 100 ml of water. Analyze an aliquot of the redissolved sample for chlorides by IC using techniques similar to those described in Method 5F for sulfates. Previous drying of the sample should have removed all HCl. Therefore, the remaining chlorides measured by IC can be assumed to be NH_4Cl, and this weight can be subtracted from the weight determined for CPM.

8.3 Air Purge to Remove SO_2 from Impinger Contents. As an alternative to the post-test N_2 purge described in section 5.2.1, the tester may opt to conduct the post-test purge with air at 20 liter/min. Note: The use of an air purge is not as effective as a N_2 purge.

8.4 Chloroform-ether Extraction. As an alternative to the methylene chloride extraction described in section 5.3.2.1, the tester may opt to conduct a chloroform-ether extraction. Note: The Chloroform-ether was not as effective as the $MeCl_2$ in removing the organics, but it was found to be an acceptable organic extractant. Chloroform and diethylether of ACS grade, with low blank values (0.001 percent), shall be used. Analysis of the chloroform and diethylether blanks shall be conducted according to Section 5.3.3 for $MeCl_2$.

8.4.1 Add the contents of Container No. 4 to a 1000-ml separatory funnel. Then add 75 ml of chloroform to the funnel, mix well, and drain off the lower organic phase. Repeat two more times with 75 ml of chloroform. Then perform three extractions with 75 ml of diethylether. This extraction should yield approximately 450 ml of organic extraction. Each time, leave a small amount of the organic/$MeCl_2$ phase in the separatory funnel ensuring that no water is collected in the organic phase.

8.4.2 Add the contents of Container No. 5 to the organic extraction. Place approximately 300 ml of the organic extract in a tared 350-ml weighing tin while storing the remaining organic extract in a sample container. As the organic extract evaporates, add the remaining extract to the weighing tin.

8.4.3 Determine the weight of the organic phase as described in Section 5.3.2.2.

8.5 Improving Collection Efficiency. If low impinger collection efficiency is suspected, the following procedure may be used.

8.5.1 Place an out-of-stock filter as described in Method 8 between the second and third impingers.

8.5.2 Recover and analyze the filter according to Method 17, Section 4.2. Include the filter holder as part of the connecting glassware and handle as described in sections 5.2.2.2 and 5.2.2.3.

8.5.3 Calculate the Concentration of CPM as follows:

$$C_{cpm} = \frac{m_o + m_i + m_f - m_b}{VM_{std}} \qquad \text{Eq. 202–5}$$

where:

m_f = amount of CPM collected on out-of-stack filter, mg.

8.6 Wet Source Testing. When testing at a wet source, use a heated out-of-stack filter as described in Method 5.

9. Bibliography

1. DeWees, W.D., S.C. Steinsberger, G.M. Plummer, L.T. Lay, G.D. McAlister, and R.T. Shigehara. ''Laboratory and Field Evaluation of the EPA Method 5 Impinger Catch for Measuring Condensible Matter from Stationary Sources.'' Paper presented at the 1989 EPA/AWMA International Symposium on Measurement of Toxic and Related Air Pollutants. Raleigh, North Carolina. May 1–5, 1989.

2. DeWees, W.D. and K.C. Steinsberger. ''Method Development and Evaluation of Draft Protocol for Measurement of Condensible Particulate Emissions.'' Draft Report. November 17, 1989.

3. Texas Air Control Board, Laboratory Division. ''Determination of Particulate in Stack Gases Containing Sulfuric Acid and/or Sulfur Dioxide.'' *Laboratory Methods for Determination of Air Pollutants.* Modified December 3, 1976.

4. Nothstein, Greg. Masters Thesis. University of Washington. Department of Environmental Health. Seattle, Washington.

5. ''Particulate Source Test Procedures Adopted by Puget Sound Air Pollution Control Agency Board of Directors.'' Puget Sound Air Pollution Control Agency, Engineering Division. Seattle, Washington. August 11, 1983.

6. Commonwealth of Pennsylvania, Department of Environmental Resources. Chapter 139, Sampling and Testing (Title 25, Rules and Regulations, Part I, Department of Environmental Resources, Subpart C, Protection of Natural Resources, Article III, Air Resources). January 8, 1960.

7. Wisconsin Department of Natural Resources. *Air Management Operations Handbook, Revision 3.* January 11, 1988.

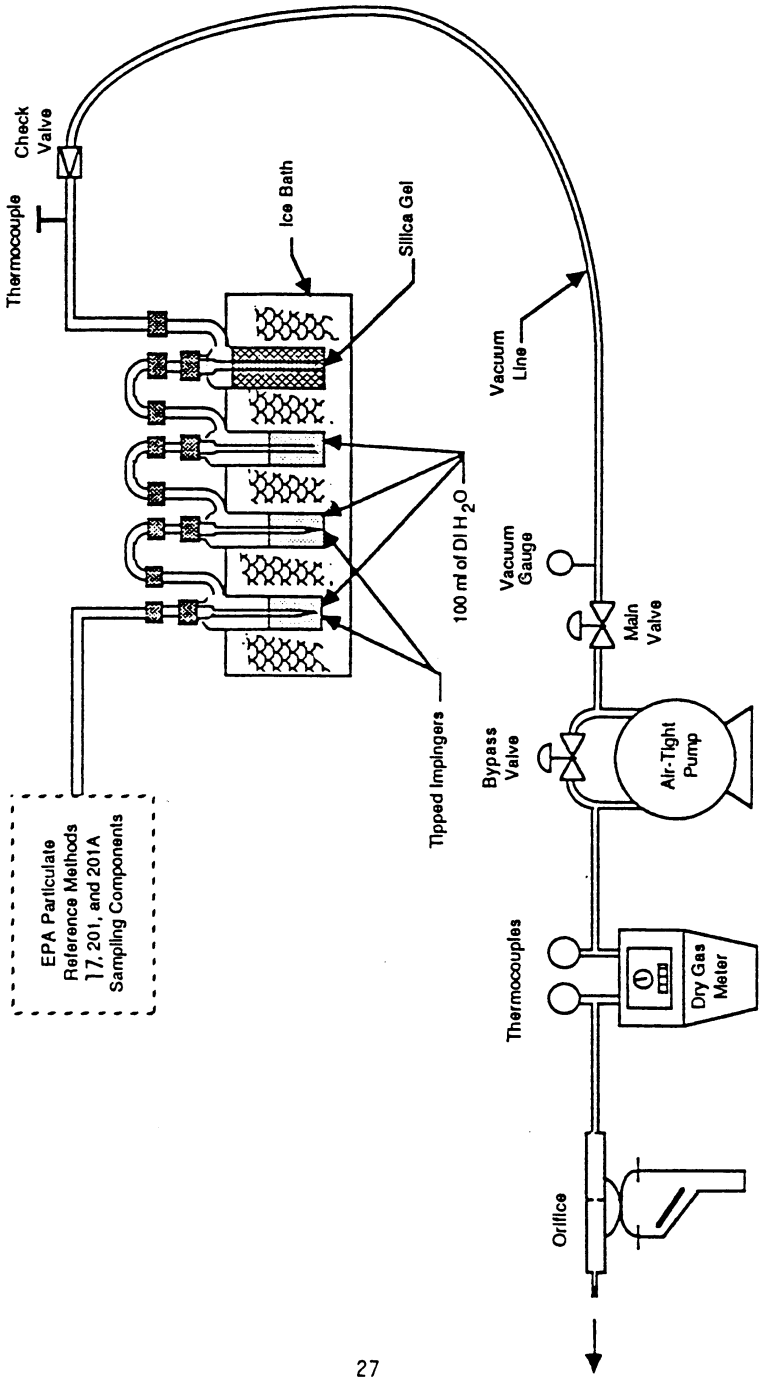

Figure 202-1. Schematic of condensible particulate sampling train.

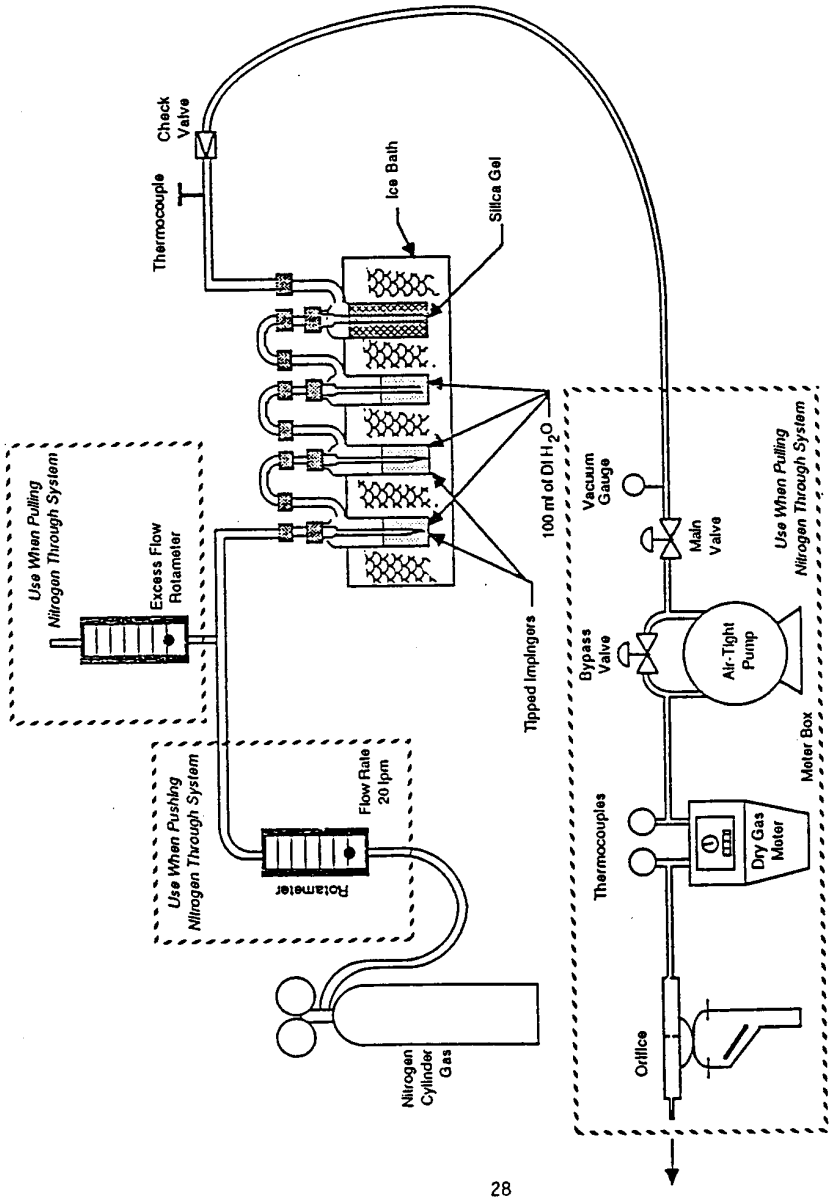

Figure 202-2. Schematic of post-test nitrogen purge system.

Moisture Determination

Volume or weight of liquid in impingers: _____ ml or g
Weight of moisture in silica gel: _____ g

Sample Preparation (Container No. 4)

Amount of liquid lost during transport: _____ ml
Final volume: _____ ml
pH of sample prior to analysis: _____
Addition of NH_4OH required: _____
Sample extracted 2X with 75 ml $MeCl_2$?: _____

For Titration of Sulfate

Normality of NH_2OH: _____ N
Volume of sample titrated: _____ ml
Volume of titrant: _____ ml

Sample Analysis

Container number	Weight of condensible particulate, mg		
	Final weight	Tare weight	Weight gain
4 (Inorganic)	.....	.....	.....
4 & 5 (Organic)	.....	.....	.....

Total: _____
Less Blank: _____
Weight of Consensible Particulate:
Figure 202–3. Analytical data sheet.

METHOD 205—VERIFICATION OF GAS DILUTION SYSTEMS FOR FIELD INSTRUMENT CALIBRATIONS

1. Introduction

1.1 Applicability. A gas dilution system can provide known values of calibration gases through controlled dilution of high-level calibration gases with an appropriate dilution gas. The instrumental test methods in 40 CFR part 60—e.g., Methods 3A, 6C, 7E, 10, 15, 16, 20, 25A and 25B—require on-site, multi-point calibration using gases of known concentrations. A gas dilution system that produces known low-level calibration gases from high-level calibration gases, with a degree of confidence similar to that for Protocol[1] gases, may be used for compliance tests in lieu of multiple calibration gases when the gas dilution system is demonstrated to meet the requirements of this method. The Administrator may also use a gas dilution system in order to produce a wide range of Cylinder Gas Audit concentrations when conducting performance specifications according to appendix F, 40 CFR part 60. As long as the acceptance criteria of this method are met, this method is applicable to gas dilution systems using any type of dilution technology, not solely the ones mentioned in this method.

1.2 Principle. The gas dilution system shall be evaluated on one analyzer once during each field test. A precalibrated analyzer is chosen, at the discretion of the source owner or operator, to demonstrate that the gas dilution system produces predictable gas concentrations spanning a range of concentrations. After meeting the requirements of this method, the remaining analyzers may be calibrated with the dilution system in accordance to the requirements of the applicable method for the duration of the field test. In Methods 15 and 16, 40 CFR part 60, appendix A, reactive compounds may be lost in the gas dilution system. Also, in Methods 25A and 25B, 40 CFR part 60, appendix A, calibration with target compounds other than propane is allowed. In these cases, a laboratory evaluation is required once per year in order to assure the Administrator that the system will dilute these reactive gases without significant loss.

NOTE: The laboratory evaluation is required only if the source owner or operator plans to utilize the dilution system to prepare gases mentioned above as being reactive.

2. Specifications

2.1 Gas Dilution System. The gas dilution system shall produce calibration gases whose measured values are within ±2 percent of the predicted values. The predicted values are calculated based on the certified concentration of the supply gas (Protocol gases, when available, are recommended for their accuracy) and the gas flow rates (or dilution ratios) through the gas dilution system.

2.1.1 The gas dilution system shall be recalibrated once per calendar year using NIST-traceable primary flow standards with an uncertainty ≤0.25 percent. A label shall be affixed at all times to the gas dilution system listing the date of the most recent calibration, the due date for the next calibration, and the person or manufacturer who carried out the calibration. Follow the manufacturer's instructions for the operation and use of the gas dilution system. A copy of the manufacturer's instructions for the operation of the instrument, as well as the most recent recalibration documentation shall be made available for the Administrator's inspection upon request.

2.1.2 Some manufacturers of mass flow controllers recommend that flow rates below 10 percent of flow controller capacity be avoided; check for this recommendation and follow the manufacturer's instructions. One study has indicated that silicone oil from a positive displacement pump produces an interference in SO_2 analyzers utilizing ultraviolet fluorescence; follow laboratory procedures similar to those outlined in Section 3.1 in order to demonstrate the significance of any resulting effect on instrument performance.

2.2 High-Level Supply Gas. An EPA Protocol calibration gas is recommended, due to its accuracy, as the high-level supply gas.

2.3 Mid-Level Supply Gas. An EPA Protocol gas shall be used as an independent check of the dilution system. The concentration of the mid-level supply gas shall be within 10 percent of one of the dilution levels tested in Section 3.2.

3. Performance Tests

3.1 Laboratory Evaluation (Optional). If the gas dilution system is to be used to formulate calibration gases with reactive compounds (Test Methods 15, 16, and 25A/25B (only if using a calibration gas other than propane during the field test) in 40 CFR part 60, appendix A), a laboratory certification must be conducted once per calendar year for each reactive compound to be diluted. In the laboratory, carry out the procedures in Section 3.2 on the analyzer required in each respective test method to be laboratory certified (15, 16, or 25A and 25B for compounds other than propane). For each compound in which the gas dilution system meets the requirements in Section 3.2, the source must provide the laboratory certification data for the field test and in the test report.

3.2 Field Evaluation (Required). The gas dilution system shall be evaluated at the test site with an analyzer or monitor chosen by the source owner or operator. It is recommended that the source owner or operator choose a precalibrated instrument with a high level of precision and accuracy for the purposes of this test. This method is not meant to replace the calibration requirements of test methods. In addition to the requirements in this method, all the calibration requirements of the applicable test method must also be met.

3.2.1 Prepare the gas dilution system according to the manufacturer's instructions. Using the high-level supply gas, prepare, at a minimum, two dilutions within the range of each dilution device utilized in the dilution system (unless, as in critical orifice systems, each dilution device is used to make only one dilution; in that case, prepare one dilution for each dilution device). Dilution device in this method refers to each mass flow controller, critical orifice, capillary tube, positive displacement pump, or any other device which is used to achieve gas dilution.

3.2.2 Calculate the predicted concentration for each of the dilutions based on the flow rates through the gas dilution system (or the dilution ratios) and the certified concentration of the high-level supply gas.

3.2.3 Introduce each of the dilutions from Section 3.2.1 into the analyzer or monitor one at a time and determine the instrument response for each of the dilutions.

3.2.4 Repeat the procedure in Section 3.2.3 two times, i.e., until three injections are made at each dilution level. Calculate the average instrument response for each triplicate injection at each dilution level. No single injection shall differ by more than ±2 percent from the average instrument response for that dilution.

3.2.5 For each level of dilution, calculate the difference between the average concentration output recorded by the analyzer and the predicted concentration calculated in Section 3.2.2. The average concentration output from the analyzer shall be within ±2 percent of the predicted value.

3.2.6 Introduce the mid-level supply gas directly into the analyzer, bypassing the gas dilution system. Repeat the procedure twice more, for a total of three mid-level supply gas injections. Calculate the average analyzer output concentration for the mid-level supply gas. The difference between the certified concentration of the mid-level supply gas and the average instrument response shall be within ±2 percent.

3.3 If the gas dilution system meets the criteria listed in Section 3.2, the gas dilution system may be used throughout that field test. If the gas dilution system fails any of the criteria listed in Section 3.2, and the tester corrects the problem with the gas dilution system, the procedure in Section 3.2 must be repeated in its entirety and all the criteria in Section 3.2 must be met in order for the gas dilution system to be utilized in the test.

4. References

1. ''EPA Traceability Protocol for Assay and Certification of Gaseous Calibration Standards,'' EPA–600/R93/224, Revised September 1993.

[55 FR 14249, Apr. 17, 1990; 55 FR 24687, June 18, 1990, as amended at 55 FR 37607, Sept. 10, 1990; 56 FR 6278, Feb. 15, 1991; 56 FR 65435, Dec. 17, 1991; 60 FR 28054, May 30, 1995]

APPENDICES N–O—[RESERVED]

APPENDIX P TO PART 51—MINIMUM EMISSION MONITORING REQUIREMENTS

1.0 PURPOSE.

This appendix P sets forth the minimum requirements for continuous emission monitoring and recording that each State Implementation Plan must include in order to be approved under the provisions of 40 CFR 51.165(b). These requirements include the source categories to be affected; emission monitoring, recording, and reporting requirements for those sources; performance specifications for accuracy, reliability, and durability of acceptable monitoring systems; and techniques to convert emission data to units of the applicable State emission standard. Such data must be reported to the State as an indication of whether proper maintenance and operating procedures are being

utilized by source operators to maintain emission levels at or below emission standards. Such data may be used directly or indirectly for compliance determination or any other purpose deemed appropriate by the State. Though the monitoring requirements are specified in detail, States are given some flexibility to resolve difficulties that may arise during the implementation of these regulations.

1.1 APPLICABILITY

The State plan shall require the owner or operator of an emission source in a category listed in this appendix to: (1) Install, calibrate, operate, and maintain all monitoring equipment necessary for continuously monitoring the pollutants specified in this appendix for the applicable source category; and (2) complete the installation and performance tests of such equipment and begin monitoring and recording within 18 months of plan approval or promulgation. The source categories and the respective monitoring requirements are listed below.

1.1.1 Fossil fuel-fired steam generators, as specified in paragraph 2.1 of this appendix, shall be monitored for opacity, nitrogen oxides emissions, sulfur dioxide emissions, and oxygen or carbon dioxide.

1.1.2 Fluid bed catalytic cracking unit catalyst regenerators, as specified in paragraph 2.4 of this appendix, shall be monitored for opacity.

1.1.3 Sulfuric acid plants, as specified in paragraph 2.3 of this appendix, shall be monitored for sulfur dioxide emissions.

1.1.4 Nitric acid plants, as specified in paragraph 2.2 of this appendix, shall be monitored for nitrogen oxides emissions.

1.2 EXEMPTIONS

The States may include provisions within their regulations to grant exemptions from the monitoring requirements of paragraph 1.1 of this appendix for any source which is:

1.2.1 Subject to a new source performance standard promulgated in 40 CFR part 60 pursuant to section 111 of the Clean Air Act; or

1.2.2 not subject to an applicable emission standard of an approved plan; or

1.2.3 scheduled for retirement within 5 years after inclusion of monitoring requirements for the source in appendix P, provided that adequate evidence and guarantees are provided that clearly show that the source will cease operations prior to such date.

1.3 EXTENSIONS

States may allow reasonable extensions of the time provided for installation of monitors for facilities unable to meet the prescribed timeframe (i.e., 18 months from plan approval or promulgation) provided the owner or operator of such facility demonstrates that good faith efforts have been made to obtain and install such devices within such prescribed timeframe.

1.4 MONITORING SYSTEM MALFUNCTION

The State plan may provide a temporary exemption from the monitoring and reporting requirements of this appendix during any period of monitoring system malfunction, provided that the source owner or operator shows, to the satisfaction of the State, that the malfunction was unavoidable and is being repaired as expeditiously as practicable.

2.0 MINIMUM MONITORING REQUIREMENT

States must, as a minimum, require the sources listed in paragraph 1.1 of this appendix to meet the following basic requirements.

2.1 FOSSIL FUEL-FIRED STEAM GENERATORS

Each fossil fuel-fired steam generator, except as provided in the following subparagraphs, with an annual average capacity factor of greater than 30 percent, as reported to the Federal Power Commission for calendar year 1974, or as otherwise demonstrated to the State by the owner or operator, shall conform with the following monitoring requirements when such facility is subject to an emission standard of an applicable plan for the pollutant in question.

2.1.1 A continuous monitoring system for the measurement of opacity which meets the performance specifications of paragraph 3.1.1 of this appendix shall be installed, calibrated, maintained, and operated in accordance with the procedures of this appendix by the owner or operator of any such steam generator of greater than 250 million BTU per hour heat input except where:

2.1.1.1 gaseous fuel is the only fuel burned, or

2.1.1.2 oil or a mixture of gas and oil are the only fuels burned and the source is able to comply with the applicable particulate matter and opacity regulations without utilization of particulate matter collection equipment, and where the source has never been found, through any administrative or judicial proceedings, to be in violation of any visible emission standard of the applicable plan.

2.1.2 A continuous monitoring system for the measurement of sulfur dioxide which meets the performance specifications of paragraph 3.1.3 of this appendix shall be installed, calibrated, maintained, and operated on any fossil fuel-fired steam generator of greater than 250 million BTU per hour heat input which has installed sulfur dioxide pollutant control equipment.

2.1.3 A continuous monitoring system for the measurement of nitrogen oxides which meets the performance specification of paragraph 3.1.2 of this appendix shall be installed,

calibrated, maintained, and operated on fossil fuel-fired steam generators of greater than 1000 million BTU per hour heat input when such facility is located in an Air Quality Control Region where the Administrator has specifically determined that a control strategy for nitrogen dioxide is necessary to attain the national standards, unless the source owner or operator demonstrates during source compliance tests as required by the State that such a source emits nitrogen oxides at levels 30 percent or more below the emission standard within the applicable plan.

2.1.4 A continuous monitoring system for the measurement of the percent oxygen or carbon dioxide which meets the performance specifications of paragraphs 3.1.4 or 3.1.5 of this appendix shall be installed, calibrated, operated, and maintained on fossil fuel-fired steam generators where measurements of oxygen or carbon dioxide in the flue gas are required to convert either sulfur dioxide or nitrogen oxides continuous emission monitoring data, or both, to units of the emission standard within the applicable plan.

2.2 Nitric acid plants

Each nitric acid plant of greater than 300 tons per day production capacity, the production capacity being expressed as 100 percent acid, located in an Air Quality Control Region where the Administrator has specifically determined that a control strategy for nitrogen dioxide is necessary to attain the national standard shall install, calibrate, maintain, and operate a continuous monitoring system for the measurement of nitrogen oxides which meets the performance specifications of paragraph 3.1.2 for each nitric acid producing facility within such plant.

2.3 Sulfuric acid plants

Each Sulfuric acid plant of greater than 300 tons per day production capacity, the production being expressed as 100 percent acid, shall install, calibrate, maintain and operate a continuous monitoring system for the measurement of sulfur dioxide which meets the performance specifications of paragraph 3.1.3 for each sulfuric acid producing facility within such plant.

2.4 Fluid bed catalytic cracking unit catalyst regenerators at petroleum refineries

Each catalyst regenerator for fluid bed catalytic cracking units of greater than 20,000 barrels per day fresh feed capacity shall install, calibrate, maintain, and operate a continuous monitoring system for the measurement of opacity which meets the performance specifications of paragraph 3.1.1.

3.0 Minimum specifications

All State plans shall require owners or operators of monitoring equipment installed to comply with this appendix, except as provided in paragraph 3.2, to demonstrate compliance with the following performance specifications.

3.1 Performance specifications

The performance specifications set forth in appendix B of part 60 are incorporated herein by reference, and shall be used by States to determine acceptability of monitoring equipment installed pursuant to this appendix except that (1) where reference is made to the ''Administrator'' in appendix B, part 60, the term *State* should be inserted for the purpose of this appendix (e.g., in Performance Specification 1, 1.2, '' * * * monitoring systems subject to approval by the *Administrator,*'' should be interpreted as, ''* * * monitoring systems subject to approval by the *State*''), and (2) where reference is made to the ''Reference Method'' in appendix B, part 60, the State may allow the use of either the State approved reference method or the Federally approved reference method as published in part 60 of this chapter. The Performance Specifications to be used with each type of monitoring system are listed below.

3.1.1 Continuous monitoring systems for measuring opacity shall comply with Performance Specification 1.

3.1.2 Continuous monitoring systems for measuring nitrogen oxides shall comply with Performance Specification 2.

3.1.3 Continuous monitoring systems for measuring sulfur dioxide shall comply with Performance Specification 2.

3.1.4 Continuous monitoring systems for measuring oxygen shall comply with Performance Specification 3.

3.1.5 Continuous monitoring systems for measuring carbon dioxide shall comply with Performance Specification 3.

3.2 Exemptions

Any source which has purchased an emission monitoring system(s) prior to September 11, 1974, may be exempt from meeting such test procedures prescribed in appendix B of part 60 for a period not to exceed five years from plan approval or promulgation.

3.3 Calibration Gases

For nitrogen oxides monitoring systems installed on fossil fuel-fired steam generators the pollutant gas used to prepare calibration gas mixtures (Section 2.1, Performance Specification 2, appendix B, part 60) shall be nitric oxide (NO). For nitrogen oxides monitoring systems, installed on nitric acid plants the pollutant gas used to prepare calibration gas mixtures (Section 2.1, Performance Specification 2, appendix B, part 60 of this chapter) shall be nitrogen dioxide

(NO_2). These gases shall also be used for daily checks under paragraph 3.7 of this appendix as applicable. For sulfur dioxide monitoring systems installed on fossil fuel-fired steam generators or sulfuric acid plants the pollutant gas used to prepare calibration gas mixtures (Section 2.1, Performance Specification 2, appendix B, part 60 of this chapter) shall be sulfur dioxide (SO_2). Span and zero gases should be traceable to National Bureau of Standards reference gases whenever these reference gases are available. Every six months from date of manufacture, span and zero gases shall be reanalyzed by conducting triplicate analyses using the reference methods in appendix A, part 60 of this chapter as follows: for sulfur dioxide, use Reference Method 6; for nitrogen oxides, use Reference Method 7; and for carbon dioxide or oxygen, use Reference Method 3. The gases may be analyzed at less frequent intervals if longer shelf lives are guaranteed by the manufacturer.

3.4 Cycling times

Cycling times include the total time a monitoring system requires to sample, analyze and record an emission measurement.

3.4.1 Continuous monitoring systems for measuring opacity shall complete a minimum of one cycle of operation (sampling, analyzing, and data recording) for each successive 10-second period.

3.4.2 Continuous monitoring systems for measuring oxides of nitrogen, carbon dioxide, oxygen, or sulfur dioxide shall complete a minimum of one cycle of operation (sampling, analyzing, and data recording) for each successive 15-minute period.

3.5 Monitor location

State plans shall require all continuous monitoring systems or monitoring devices to be installed such that representative measurements of emissions or process parameters (i.e., oxygen, or carbon dioxide) from the affected facility are obtained. Additional guidance for location of continuous monitoring systems to obtain representative samples are contained in the applicable Performance Specifications of appendix B of part 60 of this chapter.

3.6 Combined effluents

When the effluents from two or more affected facilities of similar design and operating characteristics are combined before being released to the atmosphere, the State plan may allow monitoring systems to be installed on the combined effluent. When the affected facilities are not of similar design and operating characteristics, or when the effluent from one affected facility is released to the atmosphere through more than one point, the State should establish alternate procedures to implement the intent of these requirements.

3.7 Zero and drift

State plans shall require owners or operators of all continuous monitoring systems installed in accordance with the requirements of this appendix to record the zero and span drift in accordance with the method prescribed by the manufacturer of such instruments; to subject the instruments to the manufacturer's recommended zero and span check at least once daily unless the manufacturer has recommended adjustments at shorter intervals, in which case such recommendations shall be followed; to adjust the zero and span whenever the 24-hour zero drift or 24-hour calibration drift limits of the applicable performance specifications in appendix B of part 60 are exceeded; and to adjust continuous monitoring systems referenced by paragraph 3.2 of this appendix whenever the 24-hour zero drift or 24-hour calibration drift exceed 10 percent of the emission standard.

3.8 Span

Instrument span should be approximately 200 per cent of the expected instrument data display output corresponding to the emission standard for the source.

3.9 Alternative procedures and requirements

In cases where States wish to utilize different, but equivalent, procedures and requirements for continuous monitoring systems, the State plan must provide a description of such alternative procedures for approval by the Administrator. Some examples of situations that may require alternatives follow:

3.9.1 Alternative monitoring requirements to accommodate continuous monitoring systems that require corrections for stack moisture conditions (e.g., an instrument measuring steam generator SO_2 emissions on a wet basis could be used with an instrument measuring oxygen concentration on a dry basis if acceptable methods of measuring stack moisture conditions are used to allow accurate adjustments of the measured SO_2 concentration to dry basis.)

3.9.2 Alternative locations for installing continuous monitoring systems or monitoring devices when the owner or operator can demonstrate that installation at alternative locations will enable accurate and representative measurements.

3.9.3 Alternative procedures for performing calibration checks (e.g., some instruments may demonstrate superior drift characteristics that require checking at less frequent intervals).

3.9.4 Alternative monitoring requirements when the effluent from one affected facility

or the combined effluent from two or more identical affected facilities is released to the atmosphere through more than one point (e.g., an extractive, gaseous monitoring system used at several points may be approved if the procedures recommended are suitable for generating accurate emission averages).

3.9.5 Alternative continuous monitoring systems that do not meet the spectral response requirements in Performance Specification 1, appendix B of part 60, but adequately demonstrate a definite and consistent relationship between their measurements and the opacity measurements of a system complying with the requirements in Performance Specification 1. The State may require that such demonstration be performed for each affected facility.

4.0 Minimum data requirements

The following paragraphs set forth the minimum data reporting requirements necessary to comply with §51.214(d) and (e).

4.1 The State plan shall require owners or operators of facilities required to install continuous monitoring systems to submit a written report of excess emissions for each calendar quarter and the nature and cause of the excess emissions, if known. The averaging period used for data reporting should be established by the State to correspond to the averaging period specified in the emission test method used to determine compliance with an emission standard for the pollutant/source category in question. The required report shall include, as a minimum, the data stipulated in this appendix.

4.2 For opacity measurements, the summary shall consist of the magnitude in actual percent opacity of all one-minute (or such other time period deemed appropriate by the State) averages of opacity greater than the opacity standard in the applicable plan for each hour of operation of the facility. Average values may be obtained by integration over the averaging period or by arithmetically averaging a minimum of four equally spaced, instantaneous opacity measurements per minute. Any time period exempted shall be considered before determining the excess averages of opacity (e.g., whenever a regulation allows two minutes of opacity measurements in excess of the standard, the State shall require the source to report all opacity averages, in any one hour, in excess of the standard, minus the two-minute exemption). If more than one opacity standard applies, excess emissions data must be submitted in relation to all such standards.

4.3 For gaseous measurements the summary shall consist of emission averages, in the units of the applicable standard, for each averaging period during which the applicable standard was exceeded.

4.4 The date and time identifying each period during which the continuous monitoring system was inoperative, except for zero and span checks, and the nature of system repairs or adjustments shall be reported. The State may require proof of continuous monitoring system performance whenever system repairs or adjustments have been made.

4.5 When no excess emissions have occurred and the continuous monitoring system(s) have not been inoperative, repaired, or adjusted, such information shall be included in the report.

4.6 The State plan shall require owners or operators of affected facilities to maintain a file of all information reported in the quarterly summaries, and all other data collected either by the continuous monitoring system or as necessary to convert monitoring data to the units of the applicable standard for a minimum of two years from the date of collection of such data or submission of such summaries.

5.0 Data Reduction

The State plan shall require owners or operators of affected facilities to use the following procedures for converting monitoring data to units of the standard where necessary.

5.1 For fossil fuel-fired steam generators the following procedures shall be used to convert gaseous emission monitoring data in parts per million to g/million cal (lb/million BTU) where necessary:

5.1.1 When the owner or operator of a fossil fuel-fired steam generator elects under paragraph 2.1.4 of this appendix to measure oxygen in the flue gases, the measurements of the pollutant concentration and oxygen concentration shall each be on a dry basis and the following conversion procedure used:

$$E=CF\ [20.9/20.9—\%O_2]$$

5.1.2 When the owner or operator elects under paragraph 2.1.4 of this appendix to measure carbon dioxide in the flue gases, the measurement of the pollutant concentration and the carbon dioxide concentration shall each be on a consistent basis (wet or dry) and the following conversion procedure used:

$$E=CF_c\ (100/\%\ CO_2)$$

5.1.3 The values used in the equations under paragraph 5.1 are derived as follows:

E=pollutant emission, g/million cal (lb/million BTU),

C=pollutant concentration, g/dscm (lb/dscf), determined by multiplying the average concentration (ppm) for each hourly period by 4.16×10^{-5} M g/dscm per ppm (2.64×10^{-9} M lb/dscf per ppm) where M = pollutant molecular weight, g/g-mole (lb/lb-mole). M = 64 for sulfur dioxide and 46 for oxides of nitrogen.

$\%O_2$, $\%CO_2$=Oxygen or carbon dioxide volume (expressed as percent) determined with equipment specified under paragraph 4.1.4 of this appendix,

F, F_c=a factor representing a ratio of the volume of dry flue gases generated to the calorific value of the fuel combusted (F), and a factor representing a ratio of the volume of carbon dioxide generated to the calorific value of the fuel combusted (F_c) respectively. Values of F and F_c are given in §60.45(f) of part 60, as applicable.

5.2 For sulfuric acid plants the owner or operator shall:

5.2.1 establish a conversion factor three times daily according to the procedures to §60.84(b) of this chapter;

5.2.2 multiply the conversion factor by the average sulfur dioxide concentration in the flue gases to obtain average sulfur dioxide emissions in Kg/metric ton (lb/short ton); and

5.2.3 report the average sulfur dioxide emission for each averaging period in excess of the applicable emission standard in the quarterly summary.

5.3 For nitric acid plants the owner or operator shall:

5.3.1 establish a conversion factor according to the procedures of §60.73(b) of this chapter;

5.3.2 multiply the conversion factor by the average nitrogen oxides concentration in the flue gases to obtain the nitrogen oxides emissions in the units of the applicable standard;

5.3.3 report the average nitrogen oxides emission for each averaging period in excess of the applicable emission standard, in the quarterly summary.

5.4 Any State may allow data reporting or reduction procedures varying from those set forth in this appendix if the owner or operator of a source shows to the satisfaction of the State that his procedures are at least as accurate as those in this appendix. Such procedures may include but are not limited to, the following:

5.4.1 Alternative procedures for computing emission averages that do not require integration of data (e.g., some facilities may demonstrate that the variability of their emissions is sufficiently small to allow accurate reduction of data based upon computing averages from equally spaced data points over the averaging period).

5.4.2 Alternative methods of converting pollutant concentration measurements to the units of the emission standards.

6.0 Special Consideration

The State plan may provide for approval, on a case-by-case basis, of alternative monitoring requirements different from the provisions of parts 1 through 5 of this appendix if the provisions of this appendix (i.e., the installation of a continuous emission monitoring system) cannot be implemented by a source due to physical plant limitations or extreme economic reasons. To make use of this provision, States must include in their plan specific criteria for determining those physical limitations or extreme economic situations to be considered by the State. In such cases, when the State exempts any source subject to this appendix by use of this provision from installing continuous emission monitoring systems, the State shall set forth alternative emission monitoring and reporting requirements (e.g., periodic manual stack tests) to satisfy the intent of these regulations. Examples of such special cases include, but are not limited to, the following:

6.1 Alternative monitoring requirements may be prescribed when installation of a continuous monitoring system or monitoring device specified by this appendix would not provide accurate determinations of emissions (e.g., condensed, uncombined water vapor may prevent an accurate determination of opacity using commercially available continuous monitoring systems).

6.2 Alternative monitoring requirements may be prescribed when the affected facility is infrequently operated (e.g., some affected facilities may operate less than one month per year).

6.3 Alternative monitoring requirements may be prescribed when the State determines that the requirements of this appendix would impose an extreme economic burden on the source owner or operator.

6.4 Alternative monitoring requirements may be prescribed when the State determines that monitoring systems prescribed by this appendix cannot be installed due to physical limitations at the facility.

[40 FR 46247, Oct. 6, 1975, as amended at 51 FR 40675, Nov. 7, 1986]

Appendices Q–R—[Reserved]

Appendix S to Part 51—Emission Offset Interpretative Ruling

I. Introduction

This appendix sets forth EPA's Interpretative Ruling on the preconstruction review requirements for stationary sources of air pollution (not including indirect sources) under 40 CFR subpart I and section 129 of the Clean Air Act Amendments of 1977, Public Law 95–95, (note under 42 U.S.C. 7502). A major new source or major modification which would locate in an area designated in 40 CFR 81.300 *et seq.*, as nonattainment for a pollutant for which the source or modification would be major may be allowed to construct only if the stringent conditions set forth below are met. These conditions are designed to insure

that the new source's emissions will be controlled to the greatest degree possible; that more than equivalent offsetting emission reductions (*emission offsets*) will be obtained from existing sources; and that there will be progress toward achievement of the NAAQS.

For each area designated as exceeding an NAAQS (nonattainment area) under 40 CFR 81.300 *et seq.*, this Interpretative Ruling will be superseded after June 30, 1979—(a) by preconstruction review provisions of the revised SIP, if the SIP meets the requirements of Part D, Title 1, of the Act; or (b) by a prohibition on construction under the applicable SIP and section 110(a)(2)(I) of the Act, if the SIP does not meet the requirements of Part D. The Ruling will remain in effect to the extent not superseded under the Act. This prohibition on major new source construction does not apply to a source whose permit to construct was applied for during a period when the SIP was in compliance with Part D, or before the deadline for having a revised SIP in effect that satisfies Part D.

The requirement of this Ruling shall not apply to any major stationary source or major modification that was not subject to the Ruling as in effect on January 16, 1979, if the owner or operator:

A. Obtained all final Federal, State, and local preconstruction approvals or permits necessary under the applicable State Implementation Plan before August 7, 1980;

B. Commenced construction within 18 months from August 7, 1980, or any earlier time required under the applicable State Implementation Plan; and

C. Did not discontinue construction for a period of 18 months or more and completed construction within a reasonable time.

II. Initial Screening Analyses and Determination of Applicable Requirements

A. *Definitions*—For the purposes of this Ruling:

1. *Stationary source* means any building, structure, facility, or installation which emits or may emit any air pollutant subject to regulation under the Act.

2. *Building, structure, facility or installation* means all of the pollutant-emitting activities which belong to the same industrial grouping, are located on one or more contiguous or adjacent properties, and are under the control of the same person (or persons under common control) except the activities of any vessel. Pollutant-emitting activities shall be considered as part of the same industrial grouping if they belong to the same ''Major Group'' (i.e., which have the same two digit code) as described in the *Standard Industrial Classification Manual,* 1972, as amended by the 1977 Supplement (U.S. Government Printing Office stock numbers 4101–0066 and 003–005–00176–0, respectively).

3. *Potential to emit* means the maximum capacity of a stationary source to emit a pollutant under its physical and operational design. Any physical or operational limitation on the capacity of the source to emit a pollutant, including air pollution control equipment and restrictions on hours of operation or on the type or amount of material combusted, stored, or processed, shall be treated as part of its design only if the limitation or the effect it would have on emissions is federally enforceable. Secondary emissions do not count in determining the potential to emit of a stationary source.

4. (i) *Major stationary source* means:

(*a*) Any stationary source of air pollutants which emits, or has the potential to emit, 100 tons per year or more of any pollutant subject to regulation under the Act; or

(*b*) Any physical change that would occur at a stationary source not qualifying under paragraph 5.(i)(*a*) of section II of this appendix as a major stationary source, if the change would constitute a major stationary source by itself.

(ii) A major stationary source that is major for volatile organic compounds shall be considered major for ozone.

(iii) The fugitive emissions of a stationary source shall not be included in determining for any of the purposes of this ruling whether it is a major stationary source, unless the source belongs to one of the following categories of stationary sources:

(*a*) Coal cleaning plants (with thermal dryers);

(*b*) Kraft pulp mills;

(*c*) Portland cement plants;

(*d*) Primary zinc smelters;

(*e*) Iron and steel mills;

(*f*) Primary aluminum ore reduction plants;

(*g*) Primary copper smelters;

(*h*) Municipal incinerators capable of charging more than 250 tons of refuse per day;

(*i*) Hydrofluoric, sulfuric, or nitric acid plants;

(*j*) Petroleum refineries;

(*k*) Lime plants;

(*l*) Phosphate rock processing plants;

(*m*) Coke oven batteries;

(*n*) Sulfur recovery plants;

(*o*) Carbon black plants (furnace process);

(*p*) Primary lead smelters;

(*q*) Fuel conversion plants;

(*r*) Sintering plants;

(*s*) Secondary metal production plants;

(*t*) Chemical process plants;

(*u*) Fossil-fuel boilers (or combination thereof) totaling more than 250 million British thermal units per hour heat input;

(*v*) Petroleum storage and transfer units with a total storage capacity exceeding 300,000 barrels;

(*w*) Taconite ore processing plants;

(*x*) Glass fiber processing plants;

(*y*) Charcoal production plants;

(*z*) Fossil fuel-fired steam electric plants of more than 250 million British thermal units per hour heat input;

(*aa*) Any other stationary source category which, as of August 7, 1980, is being regulated under section 111 or 112 of the Act.

5. (i) *Major modification* means any physical change in or change in the method of operation of a major stationary source that would result in a significant net emissions increase of any pollutant subject to regulation under the Act.

(ii) Any net emissions increase that is considered significant for volatile organic compounds shall be considered significant for ozone.

(iii) A physical change or change in the method of operation shall not include:

(*a*) Routine maintenance, repair, and replacement;

(*b*) Use of an alternative fuel or raw material by reason of an order under section 2 (a) and (b) of the Energy Supply and Environmental Coordination Act of 1974 (or any superseding legislation) or by reason of a natural gas curtailment plan pursuant to the Federal Power Act;

(*c*) Use of an alternative fuel by reason of an order or rule under section 125 of the Act;

(*d*) Use of an alternative fuel at a steam generating unit to the extent that the fuel is generated from municipal solid waste;

(*e*) Use of an alternative fuel or raw material by a stationary source which:

(*1*) The source was capable of accommodating before December 21, 1976, unless such change would be prohibited under any federally enforceable permit condition which was established after December 21, 1976, pursuant to 40 CFR 52.21 or under regulations approved pursuant to 40 CFR subpart I or §51.166; or

(*2*) The source is approved to use under any permit issued under this ruling;

(*f*) An increase in the hours of operation or in the production rate, unless such change is prohibited under any federally enforceable permit condition which was established after December 21, 1976 pursuant to 40 CFR 52.21 or under regulations approved pursuant to 40 CFR subpart I or §51.166;

(*g*) Any change in ownership at a stationary source.

6. (i) *Net emissions increase* means the amount by which the sum of the following exceeds zero:

(*a*) Any increase in actual emissions from a particular physical change or change in the method of operation at a stationary source; and

(*b*) Any other increases and decreases in actual emissions at the source that are contemporaneous with the particular change and are otherwise creditable.

(ii) An increase or decrease in actual emissions is contemporaneous with the increase from the particular change only if it occurs between:

(*a*) The date five years before construction on the particular change commences and

(*b*) The date that the increase from the particular change occurs.

(iii) An increase or decrease in actual emissions is creditable only if the Administrator has not relied on it in issuing a permit for the source under this Ruling which permit is in effect when the increase in actual emissions from the particular change occurs.

(iv) An increase in actual emissions is creditable only to the extent that the new level of actual emissions exceeds the old level.

(v) A decrease in actual emissions is creditable only to the extent that:

(*a*) The old level of actual emissions or the old level of allowable emissions, whichever is lower, exceeds the new level of actual emissions;

(*b*) It is federally enforceable at and after the time that actual construction on the particular change begins;

(*c*) The reviewing authority has not relied on it in issuing any permit under regulations approved pursuant to 40 CFR 51.18; and

(*d*) It has approximately the same qualitative significance for public health and welfare as that attributed to the increase from the particular change.

(vi) An increase that results from a physical change at a source occurs when the emissions unit on which construction occurred becomes operational and begins to emit a particular pollutant. Any replacement unit that requires shakedown becomes operational only after a reasonable shakedown period, not to exceed 180 days.

7. *Emissions unit* means any part of a stationary source which emits or would have the potential to emit any pollutant subject to regulation under the Act.

8. *Secondary emissions* means emissions which would occur as a result of the construction or operation of a major stationary source or major modification, but do not come from the major stationary source or major modification itself. For the purpose of this Ruling, secondary emissions must be specific, well defined, quantifiable, and impact the same general area as the stationary source or modification which causes the secondary emissions. Secondary emissions include emissions from any offsite support facility which would not be constructed or increase its emissions except as a result of the construction or operation of the major stationary source or major modification. Secondary emissions do not include any emissions which come directly from a mobile source, such as emissions from the tailpipe of a motor vehicle, from a train, or from a vessel.

9. *Fugitive emissions* means those emissions which could not reasonably pass through a stack, chimney, vent, or other functionally equivalent opening.

10. (i) *Significant* means, in reference to a net emissions increase or the potential of a source to emit any of the following pollutants, a rate of emissions that would equal or exceed any of the following rates:

Pollutant and Emissions Rate

Carbon monoxide: 100 tons per year (tpy)
Nitrogen oxides: 40 tpy
Sulfur dioxide: 40 tpy
Particulate matter: 25 tpy of particulate matter emissions
Ozone: 40 tpy of volatile organic compounds
Lead: 0.6 tpy

11. *Allowable emissions* means the emissions rate calculated using the maximum rated capacity of the source (unless the source is subject to federally enforceable limits which restrict the operating rate, or hours of operation, or both) and the most stringent of the following:

(i) Applicable standards as set forth in 40 CFR parts 60 and 61;

(ii) Any applicable State Implementation Plan emissions limitation, including those with a future compliance date; or

(iii) The emissions rate specified as a federally enforceable permit condition, including those with a future compliance date.

12. *Federally enforceable* means all limitations and conditions which are enforceable by the Administrator, including those requirements developed pursuant to 40 CFR parts 60 and 61, requirements within any applicable State implementation plan, any permit requirements established pursuant to 40 CFR 52.21 or under regulations approved pursuant to 40 CFR part 51, subpart I, including operating permits issued under an EPA-approved program that is incorporated into the State implementation plan and expressly requires adherence to any permit issued under such program.

13. (i) *Actual emissions* means the actual rate of emissions of a pollutant from an emissions unit as determined in accordance with paragraphs 16. (ii) through (iv) of Section II.A. of this appendix.

(ii) In general, actual emissions as of a particular date shall equal the average rate, in tons per year, at which the unit actually emitted the pollutant during a two-year period which precedes the particular date and which is representative of normal source operation. The reviewing authority shall allow the use of a different time period upon a determination that it is more representative of normal source operation. Actual emissions shall be calculated using the unit's actual operating hours, production rates, and types of materials processed, stored or combusted during the selected time period.

(iii) The reviewing authority may presume that source-specific allowable emissions for the unit are equivalent to the actual emissions of the unit.

(iv) For any emissions unit which has not begun normal operations on the particular date, actual emissions shall equal the potential to emit of the unit on that date.

14. *Construction* means any physical change or change in the method of operation (including fabrication, erection, installation, demolition, or modification of an emissions unit) which would result in a change in actual emissions.

15. *Commence* as applied to construction of a major stationary source or major modification means that the owner or operator has all necessary preconstruction approvals or permits and either has:

(i) Begun, or caused to begin, a continuous program of actual on-site construction of the source, to be completed within a reasonable time; or

(ii) Entered into binding agreements or contractual obligations, which cannot be cancelled or modified without substantial loss to the owner or operator, to undertake a program of actual construction of the source to be completed within a reasonable time.

16. *Necessary preconstruction approvals or permits* means those permits or approvals required under federal air quality control laws and regulations and those air quality control laws and regulations which are part of the applicable State Implementation Plan.

17. *Begin actual construction* means, in general, initiation of physical on-site construction activities on an emissions unit which are of a permanent nature. Such activities include, but are not limited to, installation of building supports and foundations, laying of underground pipework, and construction of permanent storage structures. With respect to a change in method of operating this term refers to those on-site activities other than preparatory activities which mark the initiation of the change.

18. *Lowest achievable emission rate* means, for any source, the more stringent rate of emissions based on the following:

(i) The most stringent emissions limitation which is contained in the implementation plan of any State for such class or category of stationary source, unless the owner or operator of the proposed stationary source demonstrates that such limitations are not achievable; or

(ii) The most stringent emissions limitation which is achieved in practice by such class or category of stationary source. This limitation, when applied to a modification, means the lowest achievable emissions rate for the new or modified emissions units within the stationary source. In no event shall the application of this term permit a proposed new or modified stationary source to emit any pollutant in excess of the amount allowable under applicable new source standards of performance.

19. *Resource recovery facility* means any facility at which solid waste is processed for

the purpose of extracting, converting to energy, or otherwise separating and preparing solid waste for reuse. Energy conversion facilities must utilize solid waste to provide more than 50 percent of the heat input to be considered a resource recovery facility under this Ruling.

20. *Volatile organic compounds (VOC)* is as defined in §51.100(s) of this part.

B. *Review of all sources for emission limitation compliance.* The reviewing authority must examine each proposed major new source and proposed major modification[1] to determine if such a source will meet all applicable emission requirements in the SIP, any applicable new source performance standard in 40 CFR part 60, or any national emission standard for hazardous air pollutants in 40 CFR part 61. If the reviewing authority determines that the proposed major new source cannot meet the applicable emission requirements, the permit to construct must be denied.

C. *Review of specified sources for air quality impact.* In addition, the reviewing authority must determine whether the major stationary source or major modification would be constructed in an area designated in 40 CFR 81.300 *et seq.* as nonattainment for a pollutant for which the stationary source or modification is major.

D.—E. [Reserved]

F. *Fugitive emissions sources.* Section IV. A. of this Ruling shall not apply to a source or modification that would be a major stationary source or major modification only if fugitive emissions, to the extent quantifiable, are considered in calculating the potential to emit of the stationary source or modification and the source does not belong to any of the following categories:

(1) Coal cleaning plants (with thermal dryers);
(2) Kraft pulp mills;
(3) Portland cement plants;
(4) Primary zinc smelters;
(5) Iron and steel mills;
(6) Primary aluminum ore reduction plants;
(7) Primary copper smelters;
(8) Municipal incinerators capable of charging more than 250 tons of refuse per day;
(9) Hydrofluoric, sulfuric, or nitric acid plants;
(10) Petroleum refineries;
(11) Lime plants;
(12) Phosphate rock processing plants;
(13) Coke oven batteries;
(14) Sulfur recovery plants;
(15) Carbon black plants (furnace process);
(16) Primary lead smelters;
(17) Fuel conversion plants;
(18) Sintering plants;
(19) Secondary metal production plants;
(20) Chemical process plants;
(21) Fossil-fuel boilers (or combination thereof) totaling more than 250 million British thermal units per hour heat input;
(22) Petroleum storage and transfer units with a total storage capacity exceeding 300,000 barrels;
(23) Taconite ore processing plants;
(24) Glass fiber processing plants;
(25) Charcoal production plants;
(26) Fossil fuel-fired steam electric plants of more than 250 million British thermal units per hour heat input;
(27) Any other stationary source category which, as of August 7, 1980, is being regulated under section 111 or 112 of the Act.

G. *Secondary emissions.* Secondary emissions need not be considered in determining whether the emission rates in Section II.C. above would be exceeded. However, if a source is subject to this Ruling on the basis of the direct emissions from the source, the applicable conditions of this Ruling must also be met for secondary emissions. However, secondary emissions may be exempt from Conditions 1 and 2 of Section IV. Also, since EPA's authority to perform or require indirect source review relating to mobile sources regulated under Title II of the Act (motor vehicles and aircraft) has been restricted by statute, consideration of the indirect impacts of motor vehicles and aircraft traffic is not required under this Ruling.

III. Sources Locating in Designated Clean or Unclassifiable Areas Which Would Cause or Contribute to a Violation of a National Ambient Air Quality Standard

A. This section applies only to major sources or major modifications which would locate in an area designated in 40 CFR 81.300 *et seq.* as attainment or unclassifiable in a state where EPA has not yet approved the state preconstruction review program required by 40 CFR 51.165(b), if the source or modification would exceed the following significance levels at any locality that does not meet the NAAQS:

Pollutant	Annual	Averaging time (hours)			
		24	8	3	1
SO_2	1.0 μg/m³	5 μg/m³		25 μg/m³	

[1] Hereafter the term *source* will be used to denote both any source and any modification.

Pollutant	Annual	Averaging time (hours)			
		24	8	3	1
TSP	1.0 μg/m³	5 μg/m³			
NO_2	1.0 μg/m³				
CO			0.5 mg/m³		2 mg/m³.

B. Sources to which this section applies must meet Conditions 1, 2, and 4 of Section IV.A. of this ruling.[2] However, such sources may be exempt from Condition 3 of Section IV.A. of this ruling.

C. *Review of specified sources for air quality impact.* For *stable* air pollutants (i.e. SO_2, particulate matter and CO), the determination of whether a source will cause or contribute to a violation of an NAAQS generally should be made on a case-by-case basis as of the proposed new source's start-up date using the source's allowable emissions in an atmospheric simulation model (unless a source will clearly impact on a receptor which exceeds an NAAQS).

For sources of nitrogen oxides, the initial determination of whether a source would cause or contribute to a violation of the NAAQS for NO_2 should be made using an atmospheric simulation model assuming all the nitric oxide emitted is oxidized to NO_2 by the time the plume reaches ground level. The initial concentration estimates may be adjusted if adequate data are available to account for the expected oxidation rate.

For ozone, sources of volatile organic compounds, locating outside a designated ozone nonattainment area, will be presumed to have no significant impact on the designated nonattainment area. If ambient monitoring indicates that the area of source location is in fact nonattainment, then the source may be permitted under the provisions of any state plan adopted pursuant to section 110(a)(2)(D) of the Act until the area is designated nonattainment and a State Implementation Plan revision is approved. If no state plan pursuant to section 110(a)(2)(D) has been adopted and approved, then this Ruling shall apply.

As noted above, the determination as to whether a source would cause or contribute to a violation of an NAAQS should be made as of the new source's start-up date. Therefore, if a designated nonattainment area is projected to be an attainment area as part of an approved SIP control strategy by the new source start-up date, offsets would not be required if the new source would not cause a new violation.

D. *Sources locating in clean areas,* but would cause a new violating of an NAAQS. If the reviewing authority finds that the emissions from a proposed source would cause a new violation of an NAAQS, but would not contribute to an existing violation, approval may be granted only if both of the following conditions are met:

Condition 1. The new source is required to meet a more stringent emission limitation[3] and/or the control of existing sources below allowable levels is required so that the source will not cause a violation of any NAAQS.

Condition 2. The new emission limitations for the new source as well as any existing sources affected must be enforceable in accordance with the mechanisms set forth in Section V of this appendix.

IV. Sources That Would Locate in a Designated Nonattainment Area

A. *Conditions for approval.* If the reviewing authority finds that the major stationary source or major modification would be constructed in an area designated in 40 CFR 81.300 *et seq* as nonattainment for a pollutant for which the stationary source or modification is major, approval may be granted only if the following conditions are met:

[2] The discussion in this paragraph is a proposal, but represents EPA's interim policy until final rulemaking is completed.

[3] If the reviewing authority determines that technological or economic limitations on the application of measurement methodology to a particular class of sources would make the imposition of an enforceable numerical emission standard infeasible, the authority may instead prescribe a design, operational or equipment standard. In such cases, the reviewing authority shall make its best estimate as to the emission rate that will be achieved and must specify that rate in the required submission to EPA (see Part V). Any permits issued without an enforceable numerical emission standard must contain enforceable conditions which assure that the design characteristics or equipment will be properly maintained (or that the operational conditions will be properly performed) so as to continuously achieve the assumed degree of control. Such conditions shall be enforceable as emission limitations by private parties under section 304. Hereafter, the term *emission limitation* shall also include such design, operational, or equipment standards.

Condition 1. The new source is required to meet an emission Limitation[4] which specifies the lowest achievable emission rate for such source.[5]

Condition 2. The applicant must certify that all existing major sources owned or operated by the applicant (or any entity controlling, controlled by, or under common control with the appplicant) in the same State as the proposed source are in compliance with all applicable emission limitations and standards under the Act (or are in compliance with an expeditious schedule which is Federally enforceable or contained in a court decree).

Condition 3. Emission reductions (*offsets*) from existing sources[6] in the area of the proposed source (whether or not under the same ownership) are required such that there will be reasonable progress toward attainment of the applicable NAAQs.[7]

Only intrapollutant emission offsets will be acceptable (e.g., hydrocarbon increases may not be offset against SO_2 reductions).

Condition 4. The emission offsets will provide a positive net air quality benefit in the affected area (see Section IV.D. below).[8] Atmospheric simulation modeling is not necessary for volatile organic compounds and NO_x. Fulfillment of Condition 3 and Section IV.D. will be considered adequate to meet this condition.

B. *Exemptions from certain conditions.* The reviewing authority may exempt the following sources from Condition 1 under Section III or Conditions 3 and 4. Section IV.A.:

(i) Resource recovery facilities burning municipal solid waste, and (ii) sources which must switch fuels due to lack of adequate fuel supplies or where a source is required to be modified as a result of EPA regulations (e.g., lead-in-fuel requirements) and no exemption from such regulation is available to the source. Such an exemption may be granted only if:

1. The applicant demonstrates that it made its best efforts to obtain sufficient emission offsets to comply with Condition 1 under Section III or Conditions 3 and 4 under Section IV.A. and that such efforts were unsuccessful;

2. The applicant has secured all available emission offsets; and

3. The applicant will continue to seek the necessary emission offsets and apply them when they become available.

Such an exemption may result in the need to revise the SIP to provide additional control of existing sources.

Temporary emission sources, such as pilot plants, portable facilities which will be relocated outside of the nonattainment area after a short period of time, and emissions resulting from the construction phase of a new source, are exempt from Conditions 3 and 4 of this section.

C. *Baseline for determining credit for emission and air quality offsets.* The baseline for determining credit for emission and air quality offsets will be the SIP emission limitations in effect at the time the application to construct or modify a source is filed. Thus, credit for emission offset purposes may be allowable for existing control that goes beyond that required by the SIP. Emission offsets generally should be made on a pounds per hour basis when all facilities involved in the emission offset calculations are operating at

[4] If the reviewing authority determines that technological or economic limitations on the application of measurement methodology to a particular class of sources would make the imposition of an enforceable numerical emission standard infeasible, the authority may instead prescribe a design, operational or equipment standard. In such cases, the reviewing authority shall make its best estimate as to the emission rate that will be achieved and must specify that rate in the required submission to EPA (see Part V). Any permits issued without an enforceable numerical emission standard must contain enforceable conditions which assure that the design characteristics or equipment will be properly maintained (or that the operational conditions will be properly performed) so as to continuously achieve the assumed degree of control. Such conditions shall be enforceable as emission limitations by private parties under section 304. Hereafter, the term *emission limitation* shall also include such design, operational, or equipment standards.

[5] Required only for those pollutants for which the increased allowable emissions exceed 50 tons per year, 1000 pounds per day, or 100 pounds per hour, although the reviewing authority may address other pollutants if deemed appropriate. The preceding hourly and daily rates shall apply only with respect to a pollutant for which a national ambient air quality standard, for a period less than 24 hours or for a 24-hour period, as appropriate, has been established.

[6] Subject to the provisions of section IV.C. below.

[7] The discussion in this paragraph is a proposal, but represents EPA's interim policy until final rulemaking is completed.

[8] Required only for those pollutants for which the increased allowable emissions exceed 50 tons per year, 1000 pounds per day, or 100 pounds per hour, although the reviewing authority may address other pollutants if deemed appropriate. The preceding hourly and daily rates shall apply only with respect to a pollutant for which a national ambient air quality standard, for a period less than 24 hours or for a 24-hour period, as appropriate, has been established.

their maximum expected or allowed production rate. The reviewing agency should specify other averaging periods (e.g., tons per year) in addition to the pounds per hour basis if necessary to carry out the intent of this Ruling. When offsets are calculated on a tons per year basis, the baseline emissions for existing sources providing the offsets should be calculated using the actual annual operating hours for the previous one or two year period (or other appropriate period if warranted by cyclical business conditions). Where the SIP requires certain hardware controls in lieu of an emission limitation (e.g., floating roof tanks for petroleum storage), baseline allowable emissions should be based on actual operating conditions for the previous one or two year period (i.e., actual throughput and vapor pressures) in conjunction with the required hardware controls.

1. *No meaningful or applicable SIP requirement.* Where the applicable SIP does not contain an emission limitation for a source or source category, the emission offset baseline involving such sources shall be the actual emissions determined in accordance with the discussion above regarding operating conditions.

Where the SIP emission limit allows greater emissions than the uncontrolled emission rate of the source (as when a State has a single particulate emission limit for all fuels), emission offset credit will be allowed only for control below the uncontrolled emission rate.

2. *Combustion of fuels.* Generally, the emissions for determining emission offset credit involving an existing fuel combustion source will be the allowable emissions under the SIP for the type of fuel being burned at the time the new source application is filed (i.e., if the existing source has switched to a different type of fuel at some earlier date, any resulting emission reduction [either actual or allowable] shall not be used for emission offset credit). If the existing source commits to switch to a cleaner fuel at some future date, emission offset credit based on the allowable emissions for the fuels involved is not acceptable unless the permit is conditioned to require the use of a specified alternative control measure which would achieve the same degree of emission reduction should the source switch back to a dirtier fuel at some later date. The reviewing authority should ensure that adequate long-term supplies of the new fuel are available before granting emission offset credit for fuel switches.

3. (i) *Operating hours and source shutdown.*

A source may generally be credited with emissions reductions achieved by shutting down an existing source or permanently curtailing production or operating hours below baseline levels (see initial discussion in this Section IV.C), if such reductions are permanent, quantifiable, and federally enforceable, and if the area has an EPA-approved attainment plan. In addition, the shutdown or curtailment is creditable only if it occurred on or after the date specified for this purpose in the plan, and if such date is on or after the date of the most recent emissions inventory used in the plan's demonstration of attainment. Where the plan does not specify a cutoff date for shutdown credits, the date of the most recent emissions inventory or attainment demonstration, as the case may be, shall apply. However, in no event may credit be given for shutdowns which occurred prior to August 7, 1977. For purposes of this paragraph, a permitting authority may choose to consider a prior shutdown or curtailment to have occurred after the date of its most recent emissions inventory, if the inventory explicitly includes as current ''existing'' emissions the emissions from such previously shutdown or curtailed sources.

(ii) Such reductions may be credited in the absence of an approved attainment demonstration only if the shutdown or curtailment occurred on or after the date the new source application is filed, or, if the applicant can establish that the proposed new source is a replacement for the shutdown or curtailed source and the cutoff date provisions of section IV.C.3.(i) are observed.

4. *Credit for VOC substitution.* As set forth in the Agency's ''Recommended Policy on Control of Volatile Organic Compounds'' (42 FR 35314, July 8, 1977), EPA has found that almost all non-methane VOCs are photochemically reactive and that low reactivity VOCs eventually form as much ozone as the highly reactive VOCs. Therefore, no emission offset credit may be allowed for replacing one VOC compound with another of lesser reactivity, except for those compounds listed in Table 1 of the above policy statement.

5. *''Banking'' of emission offset credit.* For new sources obtaining permits by applying offsets after January 16, 1979, the reviewing authority may allow offsets that exceed the requirements of reasonable progress toward attainment (Condition 3) to be ''banked'' (i.e., saved to provide offsets for a source seeking a permit in the future) for use under this Ruling. Likewise, the reviewing authority may allow the owner of an existing source that reduces its own emissions to bank any resulting reductions beyond those required by the SIP for use under this Ruling, even if none of the offsets are applied immediately to a new source permit. A reviewing authority may allow these banked offsets to be used under the preconstruction review program required by Part D, as long as these banked emissions are identified and accounted for in the SIP control strategy. A reviewing authority may not approve the construction of a source using banked offsets if the new source would interfere with the SIP control strategy or if such use would

violate any other condition set forth for use of offsets. To preserve banked offsets, the reviewing authority should identify them in either a SIP revision or a permit, and establish rules as to how and when they may be used.

6. *Offset credit for meeting NSPS or NESHAPS.* Where a source is subject to an emission limitation established in a New Source Performance Standard (NSPS) or a National Emission Standard for Hazardous Air Pollutants (NESHAPS), (*i.e.,* requirements under sections 111 and 112, respectively, of the Act), and a different SIP limitation, the more stringent limitation shall be used as the baseline for determining credit for emission and air quality offsets. The difference in emissions between the SIP and the NSPS or NESHAPS, for such source may not be used as offset credit. However, if a source were not subject to an NSPS or NESHAPS, for example if its construction had commenced prior to the proposal of an NSPS or NESHAPS for that source category, offset credit can be permitted for tightening the SIP to the NSPS or NESHAPS level for such source.

D. *Location of offsetting emissions.* In the case of emission offsets involving volatile organic compounds (VOC), the offsets may be obtained from sources located anywhere in the broad vicinity of the proposed new source. Generally, offsets will be acceptable if obtained from within the same AQCR as the new source or from other areas which may be contributing to the ozone problem at the proposed new source location. As with other pollutants, it is desirable to obtain offsets from sources located as close to the proposed new source site as possible. If the proposed offsets would be from sources located at greater distances from the new source, the reviewing authority should increase the ratio of the required offsets and require a showing that nearby offsets were investigated and reasonable alternatives were not available.[9]

Offsets for NO_x sources may also be obtained within the broad vicinity of the proposed new source. This is because areawide ozone and NO_2 levels are generally not as dependent on specific VOC or NO_x source location as they are on overall area emissions. Since the air quality impact of SO_2, particulate and carbon monoxide sources is site dependent, simple areawide mass emission offsets are not appropriate. For these pollutants, the reviewing authority should consider atmospheric simulation modeling to ensure that the emission offsets provide a positive net air quality benefit. However, to avoid unnecessary consumption of limited, costly and time consuming modeling resources, in most cases it can be assumed that if the emission offsets are obtained from an existing source on the same premises or in the immediate vicinity of the new source, and the pollutants disperse from substantially the same effective stack height, the air quality test under Condition 4 of Section IV.A. of this appendix will be met. Thus, when stack emissions are offset against a ground level source at the same site, modeling would be required. The reviewing authority may perform this analysis or require the applicant to submit appropriate modeling results.

E. *Reasonable progress towards attainment.* As long as the emission offset is greater than one-for-one, and the other criteria set forth above are met, EPA does not intend to question a reviewing authority's judgment as to what constitutes reasonable progress towards attainment as required under Condition 3 in Section IV.A. of this appendix. This does not apply to ''reasonable further progress'' as required by Section 173.

F. *Source obligation.* At such time that a particular source or modification becomes a major stationary source or major modification solely by virtue of a relaxation in any enforceable limitation which was established after August 7, 1980, on the capacity of the source or modification otherwise to emit a pollutant, such as a restriction on hours of operation, then the requirements of this Ruling shall apply to the source or modification as though construction had not yet commenced on the source or modification.

V. Administrative Procedures

The necessary emission offsets may be proposed either by the owner of the proposed source or by the local community or the State. The emission reduction committed to must be enforceable by authorized State and/or local agencies and under the Clean Air Act, and must be accomplished by the new source's start-up date. If emission reductions are to be obtained in a State that neighbors the State in which the new source is to be located, the emission reductions committed to must be enforceable by the neighboring State and/or local agencies and under the Clean Air Act. Where the new facility is a replacement for a facility that is being shut down in order to provide the necessary offsets, the reviewing authority may allow up to 180 days for shakedown of the new facility before the existing facility is required to cease operation.

A. *Source initiated emission offsets.* A source may propose emission offsets which involve: (1) Reductions from sources controlled by the source owner (internal emission offsets); and/or (2) reductions from neighboring sources (external emission offsets). The source does not have to investigate all possible emission offsets. As long as the emission offsets obtained represent reasonable

[9] The discussion in this paragraph is a proposal, but represents EPA's interim policy until final rulemaking is completed.

progress toward attainment, they will be acceptable. It is the reviewing authority's responsibility to assure that the emission offsets will be as effective as proposed by the source. An internal emission offset will be considered enforceable if it is made a SIP requirement by inclusion as a condition of the new source permit and the permit is forwarded to the appropriate EPA Regional Office.[10] An external emission offset will not be enforceable unless the affected source(s) providing the emission reductions is subject to a new SIP requirement to ensure that its emissions will be reduced by a specified amount in a specified time. Thus, if the source(s) providing the emission reductions does not obtain the necessary reduction, it will be in violation of a SIP requirement and subject to enforcement action by EPA, the State and/or private parties.

The form of the SIP revision may be a State or local regulation, operating permit condition, consent or enforcement order, or any other mechanism available to the State that is enforceable under the Clean Air Act. If a SIP revision is required, the public hearing on the revision may be substituted for the normal public comment procedure required for all major sources under 40 CFR 51.18. The formal publication of the SIP revision approval in the FEDERAL REGISTER need not appear before the source may proceed with construction. To minimize uncertainty that may be caused by these procedures, EPA will, if requested by the State, propose a SIP revision for public comment in the FEDERAL REGISTER concurrently with the State public hearing process. Of course, any major change in the final permit/SIP revision submitted by the State may require a reproposal by EPA.

B. *State or community initiated emission offsets.* A State or community which desires that a source locate in its area may commit to reducing emissions from existing sources (including mobile sources) to sufficiently outweigh the impact of the new source and thus open the way for the new source. As with source-initiated emission offsets, the commitment must be something more than one-for-one. This commitment must be submitted as a SIP revision by the State.

VI. POLICY WHERE ATTAINMENT DATES HAVE NOT PASSED

In some cases, the dates for attainment of primary standards specified in the SIP under section 110 have not yet passed due to a delay in the promulgation of a plan under this section of the Act. In addition the Act provides more flexibility with respect to the dates for attainment of secondary NAAQS than for primary standards. Rather than setting specific deadlines, section 110 requires secondary NAAQS to be achieved within a ''reasonable time''. Therefore, in some cases, the date for attainment of secondary standards specified in the SIP under section 110 may also not yet have passed. In such cases, a new source locating in an area designated in 40 CFR 81.3000 *et seq.* as nonattainment (or, where Section III of this Ruling is applicable, a new source which would cause or contribute to an NAAQS violation) may be exempt from the Conditions of Section IV. A. so long as the new source meets the applicable SIP emissions limitations and will not interfere with the attainment date specified in the SIP under section 110 of the Act.

(Secs. 101(b)(1), 110, 160–169, 171–178, and 301(a), Clean Air Act, as amended (42 U.S.C. 7401(b)(1), 7410, 7470–7479, 7501–7508, and 7601(a)); sec. 129(a), Clean Air Act Amendments of 1977 (Pub. L. 95–95, 91 Stat. 685 (Aug., 7, 1977)))

[44 FR 3282, Jan. 16, 1979, as amended at 45 FR 31311, May 13, 1980; 45 FR 52741, Aug. 7, 1980; 45 FR 59879, Sept. 11, 1980; 46 FR 50771, Oct. 14, 1981; 47 FR 27561, June 25, 1982; 49 FR 43210, Oct. 26, 1984; 51 FR 40661, 40675, Nov. 7, 1986; 52 FR 24714, July 1, 1987; 52 FR 29386, Aug 7, 1987; 54 FR 27285, 27299, June 28, 1989; 57 FR 3946, Feb. 3, 1992]

APPENDIXES T–U—[RESERVED]

APPENDIX V TO PART 51—CRITERIA FOR DETERMINING THE COMPLETENESS OF PLAN SUBMISSIONS

1.0. Purpose

This appendix V sets forth the minimum criteria for determining whether a State implementation plan submitted for consideration by EPA is an official submission for purposes of review under §51.103.

1.1 The EPA shall return to the submitting official any plan or revision thereof which fails to meet the criteria set forth in this appendix V, and request corrective action, identifying the component(s) absent or insufficient to perform a review of the submitted plan.

1.2 The EPA shall inform the submitting official whether or not a plan submission meets the requirements of this appendix V within 60 days of EPA's receipt of the submittal, but no later than 6 months after the date by which the State was required to submit the plan or revision. If a completeness determination is not made by 6 months from receipt of a submittal, the submittal shall be deemed complete by operation of law on the date 6 months from receipt. A determination of completeness under this paragraph means

[10] The emission offset will, therefore, be enforceable by EPA under section 113 as an applicable SIP requirement and will be enforceable by private parties under section 304 as an emission limitation.

that the submission is an official submission for purposes of §51.103.

2.0. Criteria

The following shall be included in plan submissions for review by EPA:

2.1. Administrative Materials

(a) A formal letter of submittal from the Governor or his designee, requesting EPA approval of the plan or revision thereof (hereafter ''the plan'').

(b) Evidence that the State has adopted the plan in the State code or body of regulations; or issued the permit, order, consent agreement (hereafter ''document'') in final form. That evidence shall include the date of adoption or final issuance as well as the effective date of the plan, if different from the adoption/issuance date.

(c) Evidence that the State has the necessary legal authority under State law to adopt and implement the plan.

(d) A copy of the actual regulation, or document submitted for approval and incorporation by reference into the plan, including indication of the changes made to the existing approved plan, where applicable. The submittal shall be a copy of the official State regulation /document signed, stamped, dated by the appropriate State official indicating that it is fully enforceable by the State. The effective date of the regulation/document shall, whenever possible, be indicated in the document itself.

(e) Evidence that the State followed all of the procedural requirements of the State's laws and constitution in conducting and completing the adoption/issuance of the plan.

(f) Evidence that public notice was given of the proposed change consistent with procedures approved by EPA, including the date of publication of such notice.

(g) Certification that public hearings(s) were held in accordance with the information provided in the public notice and the State's laws and constitution, if applicable.

(h) Compilation of public comments and the State's response thereto.

2.2. Technical Support

(a) Identification of all regulated pollutants affected by the plan.

(b) Identification of the locations of affected sources including the EPA attainment/nonattainment designation of the locations and the status of the attainment plan for the affected areas(s).

(c) Quantification of the changes in plan allowable emissions from the affected sources; estimates of changes in current actual emissions from affected sources or, where appropriate, quantification of changes in actual emissions from affected sources through calculations of the differences between certain baseline levels and allowable emissions anticipated as a result of the revision.

(d) The State's demonstration that the national ambient air quality standards, prevention of significant deterioration increments, reasonable further progress demonstration, and visibility, as applicable, are protected if the plan is approved and implemented. For all requests to redesignate an area to attainment for a national primary ambient air quality standard, under section 107 of the Act, a revision must be submitted to provide for the maintenance of the national primary ambient air quality standards for at least 10 years as required by section 175A of the Act.

(e) Modeling information required to support the proposed revision, including input data, output data, models used, justification of model selections, ambient monitoring data used, meteorological data used, justification for use of offsite data (where used), modes of models used, assumptions, and other information relevant to the determination of adequacy of the modeling analysis.

(f) Evidence, where necessary, that emission limitations are based on continuous emission reduction technology.

(g) Evidence that the plan contains emission limitations, work practice standards and recordkeeping/reporting requirements, where necessary, to ensure emission levels.

(h) Compliance/enforcement strategies, including how compliance will be determined in practice.

(i) Special economic and technological justifications required by any applicable EPA policies, or an explanation of why such justifications are not necessary.

2.3. Exceptions

2.3.1. The EPA, for the purposes of expediting the review of the plan, has adopted a procedure referred to as ''parallel processing.'' Parallel processing allows a State to submit the plan prior to actual adoption by the State and provides an opportunity for the State to consider EPA comments prior to submission of a final plan for final review and action. Under these circumstances, the plan submitted will not be able to meet all of the requirements of paragraph 2.1 (all requirements of paragraph 2.2 will apply). As a result, the following exceptions apply to plans submitted explicitly for parallel processing:

(a) The letter required by paragraph 2.1(a) shall request that EPA propose approval of the proposed plan by parallel processing.

(b) In lieu of paragraph 2.1(b) the State shall submit a schedule for final adoption or issuance of the plan.

(c) In lieu of paragraph 2.1(d) the plan shall include a copy of the proposed/draft regulation or document, including indication of the proposed changes to be made to the existing approved plan, where applicable.

(d) The requirements of paragraphs 2.1(e)–2.1(h) shall not apply to plans submitted for parallel processing.

2.3.2. The exceptions granted in paragraph 2.3.1 shall apply only to EPA's determination of proposed action and all requirements of paragraph 2.1 shall be met prior to publication of EPA's final determination of plan approvability.

[55 FR 5830, Feb. 16, 1990, as amended at 56 FR 42219, Aug. 26, 1991; 56 FR 57288, Nov. 8, 1991]

APPENDIX W TO PART 51—GUIDELINE ON AIR QUALITY MODELS (REVISED)

[EPA Document Number EPA–450/2–78–027R]

PREFACE

Industry and control agencies have long expressed a need for consistency in the application of air quality models for regulatory purposes. In the 1977 Clean Air Act, Congress mandated such consistency and encouraged the standardization of model applications. The Guideline on Air Quality Models was first published in April 1978 to satisfy these requirements by specifying models and providing guidance for their use. This guideline provides a common basis for estimating the air quality concentrations used in assessing control strategies and developing emission limits.

The continuing development of new air quality models in response to regulatory requirements and the expanded requirements for models to cover even more complex problems have emphasized the need for periodic review and update of guidance on these techniques. Four primary on-going activities provide direct input to revisions of this modeling guideline. The first is a series of annual EPA workshops conducted for the purpose of ensuring consistency and providing clarification in the application of models. The second activity, directed toward the improvement of modeling procedures, is the cooperative agreement that EPA has with the scientific community represented by the American Meteorological Society. This agreement provides scientific assessment of procedures and proposed techniques and sponsors workshops on key technical issues. The third activity is the solicitation and review of new models from the technical and user community. In the March 27, 1980 FEDERAL REGISTER, a procedure was outlined for the submittal to EPA of privately developed models. After extensive evaluation and scientific review, these models, as well as those made available by EPA, are considered for recognition in this guideline. The fourth activity is the extensive on-going research efforts by EPA and others in air quality and meteorological modeling.

Based primarily on these four activities, this document embodies revisions to the ''Guideline on Air Quality Models.'' Although the text has been revised from the 1978 guide, the present content and topics are similar. As necessary, new sections and topics are included. EPA does not make changes to the guidance on a predetermined schedule, but rather on an as needed basis. EPA believes that revisions to this guideline should be timely and responsive to user needs and should involve public participation to the greatest possible extent. All future changes to the guidance will be proposed and finalized in the FEDERAL REGISTER. Information on the current status of modeling guidance can always be obtained from EPA's Regional Offices.

TABLE OF CONTENTS

List of Tables

1.0 Introduction
2.0 Overview of Model Use
2.1 Suitability of Models
2.2 Classes of Models
2.3 Levels of Sophistication of Models
3.0 Recommended Air Quality Models
3.1 Preferred Modeling Techniques
3.1.1 Discussion
3.1.2 Recommendations
3.2 Use of Alternative Models
3.2.1 Discussion
3.2.2 Recommendations
3.3 Availability of Supplementary Modeling Guidance
3.3.1 The Model Clearinghouse
3.3.2 Regional Meteorologists Workshops
4.0 Simple-Terrain Stationary-Source Models
4.1 Discussion
4.2 Recommendations
4.2.1 Screening Techniques
4.2.2 Refined Analytical Techniques
5.0 Model Use in Complex Terrain
5.1 Discussion
5.2 Recommendations
5.2.1 Screening Techniques
5.2.2 Refined Analytical Techniques
6.0 Models for Ozone, Carbon Monoxide and Nitrogen Dioxide
6.1 Discussion
6.2 Recommendations
6.2.1 Models for Ozone
6.2.2 Models for Carbon Monoxide
6.2.3 Models for Nitrogen Dioxide (Annual Average)
7.0 Other Model Requirements
7.1 Discussion
7.2 Recommendations
7.2.1 Fugitive Dust/Fugitive Emissions
7.2.2 Particulate Matter
7.2.3 Lead
7.2.4 Visibility
7.2.5 Good Engineering Practice Stack Height
7.2.6 Long Range Transport (LRT) (i.e., beyond 50km)
7.2.7 Modeling Guidance for Other Governmental Programs

7.2.8 Air Pathway Analyses (Air Toxics and Hazardous Waste)
8.0 General Modeling Considerations
8.1 Discussion
8.2 Recommendations
8.2.1 Design Concentrations
8.2.2 Critical Receptor Sites
8.2.3 Dispersion Coefficients
8.2.4 Stability Categories
8.2.5 Plume Rise
8.2.6 Chemical Transformation
8.2.7 Gravitational Settling and Deposition
8.2.8 Urban/Rural Classification
8.2.9 Fumigation
8.2.10 Stagnation
8.2.11 Calibration of Models
9.0 Model Input Data
9.1 Source Data
9.1.1 Discussion
9.1.2 Recommendations
9.2 Background Concentrations
9.2.1 Discussion
9.2.2 Recommendations (Isolated Single Source)
9.2.3 Recommendations (Multi-Source Areas)
9.3 Meteorological Input Data
9.3.1 Length of Record of Meteorological Data
9.3.2 National Weather Service Data
9.3.3 Site-Specific Data
9.3.4 Treatment of Calms
10.0 Accuracy and Uncertainty of Models
10.1 Discussion
10.1.1 Overview of Model Uncertainty
10.1.2 Studies of Model Accuracy
10.1.3 Use of Uncertainty in Decision-Making
10.1.4 Evaluation of Models
10.2 Recommendations
11.0 Regulatory Application of Models
11.1 Discussion
11.2 Recommendations
11.2.1 Analysis Requirements
11.2.2 Use of Measured Data in Lieu of Model Estimates
11.2.3 Emission Limits
12.0 References
13.0 Bibliography
14.0 Glossary of Terms
Appendix A to Appendix W of Part 51—Summaries of Preferred Air Quality Models
Appendix B to Appendix W of Part 51—Summaries of Alternative Air Quality Models
Appendix C to Appendix W of Part 51—Example Air Quality Analysis Checklist

LIST OF TABLES

Table No.	Title
4–1	Preferred Models for Selected Applications in Simple Terrain.
5–1a	Neutral/Stable Meteorological Matrix for CTSCREEN.
5–1b	Unstable/Convective Meteorological Matrix for CTSCREEN.

LIST OF TABLES—Continued

Table No.	Title
5–2	Preferred Options for the SHORTZ/LONGZ Computer Codes When Used in a Screening Mode.
5–3	Preferred Options for the RTDM Computer Code When Used in a Screening Mode.
9–1	Model Emission Input Data for Point Sources.
9–2	Point Source Model Input Data (Emissions) for PSD NAAQS Compliance Demonstrations.
9–3	Averaging Times for Site-Specific Wind and Turbulence Measurements.

1.0 INTRODUCTION

This guideline recommends air quality modeling techniques that should be applied to State Implementation Plan (SIP)[1] revisions for existing sources and to new source reviews,[2] including prevention of significant deterioration (PSD).[3] It is intended for use by EPA Regional Offices in judging the adequacy of modeling analyses performed by EPA, State and local agencies and by industry. The guidance is appropriate for use by other Federal agencies and by State agencies with air quality and land management responsibilities. It serves to identify, for all interested parties, those techniques and data bases EPA considers acceptable. The guide is not intended to be a compendium of modeling techniques. Rather, it should serve as a basis by which air quality managers, supported by sound scientific judgment, have a common measure of acceptable technical analysis.

Due to limitations in the spatial and temporal coverage of air quality measurements, monitoring data normally are not sufficient as the sole basis for demonstrating the adequacy of emission limits for existing sources. Also, the impacts of new sources that do not yet exist can only be determined through modeling. Thus, models, while uniquely filling one program need, have become a primary analytical tool in most air quality assessments. Air quality measurements though can be used in a complementary manner to dispersion models, with due regard for the strengths and weaknesses of both analysis techniques. Measurements are particularly useful in assessing the accuracy of model estimates. The use of air quality measurements alone however could be preferable, as detailed in a later section of this document, when models are found to be unacceptable and monitoring data with sufficient spatial and temporal coverage are available.

It would be advantageous to categorize the various regulatory programs and to apply a designated model to each proposed source needing analysis under a given program. However, the diversity of the nation's topography and climate, and variations in source configurations and operating characteristics dictate against a strict modeling ''cookbook.'' There is no one model capable of

properly addressing all conceivable situations even within a broad category such as point sources. Meteorological phenomena associated with threats to air quality standards are rarely amenable to a single mathematical treatment; thus, case-by-case analysis and judgment are frequently required. As modeling efforts become more complex, it is increasingly important that they be directed by highly competent individuals with a broad range of experience and knowledge in air quality meteorology. Further, they should be coordinated closely with specialists in emissions characteristics, air monitoring and data processing. The judgment of experienced meteorologists and analysts is essential.

The model that most accurately estimates concentrations in the area of interest is always sought. However, it is clear from the needs expressed by the States and EPA Regional Offices, by many industries and trade associations, and also by the deliberations of Congress, that consistency in the selection and application of models and data bases should also be sought, even in case-by-case analyses. Consistency ensures that air quality control agencies and the general public have a common basis for estimating pollutant concentrations, assessing control strategies and specifying emission limits. Such consistency is not, however, promoted at the expense of model and data base accuracy. This guide provides a consistent basis for selection of the most accurate models and data bases for use in air quality assessments.

Recommendations are made in this guide concerning air quality models, data bases, requirements for concentration estimates, the use of measured data in lieu of model estimates, and model evaluation procedures. Models are identified for some specific applications. The guidance provided here should be followed in all air quality analyses relative to State Implementation Plans and in analyses required by EPA, State and local agency air programs. The EPA may approve the use of another technique that can be demonstrated to be more appropriate than those recommended in this guide. This is discussed at greater length in Section 3.0. In all cases, the model applied to a given situation should be the one that provides the most accurate representation of atmospheric transport, dispersion, and chemical transformations in the area of interest. However, to ensure consistency, deviations from this guide should be carefully documented and fully supported.

From time to time situations arise requiring clarification of the intent of the guidance on a specific topic. Periodic workshops are held with the EPA Regional Meteorologists to ensure consistency in modeling guidance and to promote the use of more accurate air quality models and data bases. The workshops serve to provide further explanations of guideline requirements to the Regional Offices and workshop reports are issued with this clarifying information. In addition, findings from on-going research programs, new model submittals, or results from model evaluations and applications are continuously evaluated. Based on this information changes in the guidance may be indicated.

All changes to this guidance must follow rulemaking requirements since the guideline is codified in Appendix W of part 51. EPA will promulgate proposed and final rules in the FEDERAL REGISTER to amend this Appendix. Ample opportunity for public comment will also be provided for each proposed change and public hearings scheduled if requested. Final rule changes will also be made available through the National Technical Information Service (NTIS).

A wide range of topics on modeling and data bases are discussed in the remainder of this guideline. Chapter 2 gives an overview of models and their appropriate use. Chapter 3 provides specific guidance on the use of ''preferred'' air quality models and on the selection of alternative techniques. Chapters 4 through 7 provide recommendations on modeling techniques for application to simple-terrain stationary source problems, complex terrain problems, and mobile source problems. Specific modeling requirements for selected regulatory issues are also addressed. Chapter 8 discusses issues common to many modeling analyses, including acceptable model components. Chapter 9 makes recommendations for data inputs to models including source, meteorological and background air quality data. Chapter 10 covers the uncertainty in model estimates and how that information can be useful to the regulatory decision-maker. The last chapter summarizes how estimates and measurements of air quality are used in assessing source impact and in evaluating control strategies.

Appendix W to 40 CFR part 51 (the ''Guideline on Air Quality Models (Revised)'') itself contains three appendices: A, B, and C. Thus, when reference is made to ''appendix A'' in this document, it refers to the appendix A to appendix W to 40 CFR part 51. Appendices B and C are referenced in the same way.

Appendix A contains summaries of refined air quality models that are ''preferred'' for specific applications; both EPA models and models developed by others are included. Appendix B contains summaries of other refined models that may be considered with a case-specific justification. Appendix C contains a checklist of requirements for an air quality analysis.

2.0 OVERVIEW OF MODEL USE

Before attempting to implement the guidance contained in this document, the reader

should be aware of certain general information concerning air quality models and their use. Such information is provided in this section.

2.1 Suitability of Models

The extent to which a specific air quality model is suitable for the evaluation of source impact depends upon several factors. These include: (1) The meteorological and topographic complexities of the area; (2) the level of detail and accuracy needed for the analysis; (3) the technical competence of those undertaking such simulation modeling; (4) the resources available; and (5) the detail and accuracy of the data base, i.e., emissions inventory, meteorological data, and air quality data. Appropriate data should be available before any attempt is made to apply a model. A model that requires detailed, precise, input data should not be used when such data are unavailable. However, assuming the data are adequate, the greater the detail with which a model considers the spatial and temporal variations in emissions and meteorological conditions, the greater the ability to evaluate the source impact and to distinguish the effects of various control strategies.

Air quality models have been applied with the most accuracy or the least degree of uncertainty to simulations of long term averages in areas with relatively simple topography. Areas subject to major topographic influences experience meteorological complexities that are extremely difficult to simulate. Although models are available for such circumstances, they are frequently site specific and resource intensive. In the absence of a model capable of simulating such complexities, only a preliminary approximation may be feasible until such time as better models and data bases become available.

Models are highly specialized tools. Competent and experienced personnel are an essential prerequisite to the successful application of simulation models. The need for specialists is critical when the more sophisticated models are used or the area being investigated has complicated meteorological or topographic features. A model applied improperly, or with inappropriately chosen data, can lead to serious misjudgments regarding the source impact or the effectiveness of a control strategy.

The resource demands generated by use of air quality models vary widely depending on the specific application. The resources required depend on the nature of the model and its complexity, the detail of the data base, the difficulty of the application, and the amount and level of expertise required. The costs of manpower and computational facilities may also be important factors in the selection and use of a model for a specific analysis. However, it should be recognized that under some sets of physical circumstances and accuracy requirements, no present model may be appropriate. Thus, consideration of these factors should not lead to selection of an inappropriate model.

2.2 Classes of Models

The air quality modeling procedures discussed in this guide can be categorized into four generic classes: Gaussian, numerical, statistical or empirical, and physical. Within these classes, especially Gaussian and numerical models, a large number of individual ''computational algorithms'' may exist, each with its own specific applications. While each of the algorithms may have the same generic basis, e.g., Gaussian, it is accepted practice to refer to them individually as models. For example, the CRSTER model and the RAM model are commonly referred to as individual models. In fact, they are both variations of a basic Gaussian model. In many cases the only real difference between models within the different classes is the degree of detail considered in the input or output data.

Gaussian models are the most widely used techniques for estimating the impact of nonreactive pollutants. Numerical models may be more appropriate than Gaussian models for area source urban applications that involve reactive pollutants, but they require much more extensive input data bases and resources and therefore are not as widely applied. Statistical or empirical techniques are frequently employed in situations where incomplete scientific understanding of the physical and chemical processes or lack of the required data bases make the use of a Gaussian or numerical model impractical. Various specific models in these three generic types are discussed in this guideline.

Physical modeling, the fourth generic type, involves the use of wind tunnel or other fluid modeling facilities. This class of modeling is a complex process requiring a high level of technical expertise, as well as access to the necessary facilities. Nevertheless, physical modeling may be useful for complex flow situations, such as building, terrain or stack down-wash conditions, plume impact on elevated terrain, diffusion in an urban environment, or diffusion in complex terrain. It is particularly applicable to such situations for a source or group of sources in a geographic area limited to a few square kilometers. If physical modeling is available and its applicability demonstrated, it may be the best technique. A discussion of physical modeling is beyond the scope of this guide. The EPA publication ''Guideline for Fluid Modeling of Atmospheric Diffusion,''[4] provides information on fluid modeling applications and the limitations of that method.

2.3 Levels of Sophistication of Models

In addition to the various classes of models, there are two levels of sophistication. The first level consists of general, relatively simple estimation techniques that provide conservative estimates of the air quality impact of a specific source, or source category. These are screening techniques or screening models. The purpose of such techniques is to eliminate the need of further more detailed modeling for those sources that clearly will not cause or contribute to ambient concentrations in excess of either the National Ambient Air Quality Standards (NAAQS)[5] or the allowable prevention of significant deterioration (PSD) concentration increments.[3] If a screening technique indicates that the concentration contributed by the source exceeds the PSD increment or the increment remaining to just meet the NAAQS, then the second level of more sophisticated models should be applied.

The second level consists of those analytical techniques that provide more detailed treatment of physical and chemical atmospheric processes, require more detailed and precise input data, and provide more specialized concentration estimates. As a result they provide a more refined and, at least theoretically, a more accurate estimate of source impact and the effectiveness of control strategies. These are referred to as refined models.

The use of screening techniques followed by a more refined analysis is always desirable, however there are situations where the screening techniques are practically and technically the only viable option for estimating source impact. In such cases, an attempt should be made to acquire or improve the necessary data bases and to develop appropriate analytical techniques.

3.0 Recommended Air Quality Models

This section recommends refined modeling techniques that are preferred for use in regulatory air quality programs. The status of models developed by EPA, as well as those submitted to EPA for review and possible inclusion in this guidance, is discussed. The section also addresses the selection of models for individual cases and provides recommendations for situations where the preferred models are not applicable. Two additional sources of modeling guidance, the Model Clearinghouse[6] and periodic Regional Meteorologists' workshops, are also briefly discussed here.

In all regulatory analyses, especially if other than preferred models are selected for use, early discussions among Regional Office staff, State and local control agencies, industry representatives, and where appropriate, the Federal Land Manager, are invaluable and are encouraged. Agreement on the data base to be used, modeling techniques to be applied and the overall technical approach, prior to the actual analyses, helps avoid misunderstandings concerning the final results and may reduce the later need for additional analyses. The use of an air quality checklist, such as presented in appendix C, and the preparation of a written protocol help to keep misunderstandings at a minimum.

It should not be construed that the preferred models identified here are to be permanently used to the exclusion of all others or that they are the only models available for relating emissions to air quality. The model that most accurately estimates concentrations in the area of interest is always sought. However, designation of specific models is needed to promote consistency in model selection and application.

The 1980 solicitation of new or different models from the technical community[7] and the program whereby these models are evaluated, established a means by which new models are identified, reviewed and made available in the guideline. There is a pressing need for the development of models for a wide range of regulatory applications. Refined models that more realistically simulate the physical and chemical process in the atmosphere and that more reliably estimate pollutant concentrations are required. Thus, the solicitation of models is considered to be continuous.

3.1 Preferred Modeling Techniques

3.1.1 Discussion

EPA has developed approximately 10 models suitable for regulatory application. More than 20 additional models were submitted by private developers for possible inclusion in the guideline. These refined models have all been organized into eight categories of use: rural, urban industrial complex, reactive pollutants, mobile sources, complex terrain, visibility, and long range transport. They are undergoing an intensive evaluation by category. The evaluation exercises[8,9,10] include statistical measures of model performance in comparison with measured air quality data as suggested by the American Meteorological Society[11] and, where possible, peer scientific reviews.[12,13,14]

When a single model is found to perform better than others in a given category, it is recommended for application in that category as a preferred model and listed in Appendix A. If no one model is found to clearly perform better through the evaluation exercise, then the preferred model listed in appendix A is selected on the basis of other factors such as past use, public familiarity, cost or resource requirements, and availability. No further evaluation of a preferred model is required if the source follows EPA recommendations specified for the model in this

guideline. The models not specifically recommended for use in a particular category are summarized in appendix B. These models should be compared with measured air quality data when they are used for regulatory applications consistent with recommendations in section 3.2.

The solicitation of new refined models which are based on sounder scientific principles and which more reliably estimate pollutant concentrations is considered by EPA to be continuous. Models that are submitted in accordance with the provisions outlined in the FEDERAL REGISTER notice of March 1980 (45 FR 20157)[7] will be evaluated as submitted. These requirements are:

1. The model must be computerized and functioning in a common Fortran language suitable for use on a variety of computer systems.

2. The model must be documented in a user's guide which identifies the mathematics of the model, data requirements and program operating characteristics at a level of detail comparable to that available for currently recommended models, e.g., the Single Source [CRSTER] Model.

3. The model must be accompanied by a complete test data set including input parameters and output results. The test data must be included in the user's guide as well as provided in computer-readable form.

4. The model must be useful to typical users, e.g., State air pollution control agencies, for specific air quality control problems. Such users should be able to operate the computer program(s) from available documentation.

5. The model documentation must include a comparison with air quality data or with other well-established analytical techniques.

6. The developer must be willing to make the model available to users at reasonable cost or make it available for public access through the National Technical Information Service; the model cannot be proprietary.

The evaluation process will include a determination of technical merit, in accordance with the above six items including the practicality of the model for use in ongoing regulatory programs. Each model will also be subjected to a performance evaluation for an appropriate data base and to a peer scientific review. Models for wide use (not just an isolated case!) found to perform better, based on an evaluation for the same data bases used to evaluate models in appendix A, will be proposed for inclusion as preferred models in future guideline revisions.

3.1.2 Recommendations

Appendix A identifies refined models that are preferred for use in regulatory applications. If a model is required for a particular application, the user should select a model from that appendix. These models may be used without a formal demonstration of applicability as long as they are used as indicated in each model summary of appendix A. Further recommendations for the application of these models to specific source problems are found in subsequent sections of this guideline.

If changes are made to a preferred model without affecting the concentration estimates, the preferred status of the model is unchanged. Examples of modifications that do not affect concentrations are those made to enable use of a different computer or those that affect only the format or averaging time of the model results. However, when any changes are made, the Regional Administrator should require a test case example to demonstrate that the concentration estimates are not affected.

A preferred model should be operated with the options listed in appendix A as ''Recommendations for Regulatory Use.'' If other options are exercised, the model is no longer ''preferred.'' Any other modification to a preferred model that would result in a change in the concentration estimates likewise alters its status as a preferred model. Use of the model must then be justified on a case-by-case basis.

3.2 Use of Alternative Models

3.2.1 Discussion Selection of the best techniques for each individual air quality analysis is always encouraged, but the selection should be done in a consistentmanner. A simple listing of models in this guide cannot alone achieve that consistency nor can it necessarily provide the best model for all possible situations. An EPA document, ''Interim Procedures for Evaluating Air Quality Models'',[15,16] has been prepared to assist in developing a consistent approach when justifying the use of other than the preferred modeling techniques recommended in this guide. An alternative to be considered to the performance measures contained in chapter 3 of this document is set forth in another EPA document ''Protocol for Determining the Best Performing Model''.[17] The procedures in both documents provide a general framework for objective decision-making on the acceptability of an alternative model for a given regulatory application. The documents contain procedures for conducting both the technical evaluation of the model and the field test or performance evaluation.

This section discusses the use of alternate modeling techniques and defines three situations when alternative models may be used.

3.2.2 Recommendations. Determination of acceptability of a model is a Regional Office responsibility. Where the Regional Administrator finds that an alternative model is more appropriate than a preferred model, that model may be used subject to the recommendations below. This finding will normally result from a determination that (1) a

preferred air quality model is not appropriate for the particular application; or (2) a more appropriate model or analytical procedure is available and is applicable.

An alternative model should be evaluated from both a theoretical and a performance perspective before it is selected for use. There are three separate conditions under which such a model will normally be approved for use: (1) If a demonstration can be made that the model produces concentration estimates equivalent to the estimates obtained using a preferred model; (2) if a statistical performance evaluation has been conducted using measured air quality data and the results of that evaluation indicate the alternative model performs better for the application than a comparable model in appendix A; and (3) if there is no preferred model for the specific application but a refined model is needed to satisfy regulatory requirements. Any one of these three separate conditions may warrant use of an alternative model. Some known alternative models that are applicable for selected situations are contained in appendix B. However, inclusion there does not infer any unique status relative to other alternative models that are being or will be developed in the future.

Equivalency is established by demonstrating that the maximum or highest, second highest concentrations are within 2 percent of the estimates obtained from the preferred model. The option to show equivalency is intended as a simple demonstration of acceptability for an alternative model that is so nearly identical (or contains options that can make it identical) to a preferred model that it can be treated for practical purposes as the preferred model. Two percent was selected as the basis for equivalency since it is a rough approximation of the fraction that PSD Class I increments are of the NAAQS for SO_2, i.e., the difference in concentrations that is judged to be significant. However, notwithstanding this demonstration, use of models that are not equivalent may be used when one of the two other conditions identified below are satisfied.

The procedures and techniques for determining the acceptability of a model for an individual case based on superior performance is contained in the document entitled ''Interim Procedures for Evaluating Air Quality Models'',[15] and should be followed, as appropriate.[a] Preparation and implementation of an evaluation protocol which is acceptable to both control agencies and regulated industry is an important element in such an evaluation.

When no appendix A model is applicable to the modeling problem, an alternative refined model may be used provided that:

1. The model can be demonstrated to be applicable to the problem on a theoretical basis, and

2. The data bases which are necessary to perform the analysis are available and adequate, and

3a. Performance evaluations of the model in similar circumstances have shown that the model is not biased toward underestimates, or

3b. After consultation with the EPA Regional Office, a second model is selected as a baseline or reference point for performance and the interim procedures[15]/protocol[17] are then used to demonstrate that the proposed model performs better than the reference model.

3.3 Availability of Supplementary Modeling Guidance

The Regional Administrator has the authority to select models that are appropriate for use in a given situation. However, there is a need for assistance and guidance in the selection process so that fairness and consistency in modeling decisions is fostered among the various Regional Offices and the States. To satisfy that need, EPA established the Model Clearinghouse and also holds periodic workshops with headquarters, Regional Office and State modeling representatives.

3.3.1 The Model Clearinghouse

3.3.1.1 *Discussion*. The Model Clearinghouse is the single EPA focal point for review of air quality simulation models proposed for use in specific regulatory applications. Details concerning the Clearinghouse and its operation are found in the document, ''Model Clearinghouse: Operational Plan.''[6] Three primary functions of the Clearinghouse are:

(1) Review of decisions proposed by EPA Regional Offices on the use of modeling techniques and data bases.

(2) Periodic visits to Regional Offices to gather information pertinent to regulatory model usage.

(3) Preparation of an annual report summarizing activities of the Clearinghouse including specific determinations made during the course of the year.

3.3.1.2 *Recommendations*. The Regional Administrator may request assistance from the Model Clearinghouse after an initial evaluation and decision has been reached concerning the application of a model, analytical

[a] Another EPA document, ''Protocol for Determining the Best Performing Model'',[17] contains advanced statistical techniques for determining which model performs better than other competing models. In many cases, this protocol should be considered by users of the ''Interim Procedures for Evaluating Air Quality Models'' in preference to the material currently in Chapter 3 of that document.

technique or data base in a particular regulatory action. The Clearinghouse may also consider and evaluate the use of modeling techniques submitted in support of any regulatory action. Additional responsibilities are: (1) Review proposed action for consistency with agency policy; (2) determine technical adequacy; and (3) make recommendations concerning the technique or data base.

3.3.2 Regional Meteorologists Workshops

3.3.2.1 *Discussion*. EPA conducts an annual in-house workshop for the purpose of mutual discussion and problem resolution among Regional Office modeling specialists, EPA research modeling experts, EPA Headquarters modeling and regulatory staff and representatives from State modeling programs. A summary of the issues resolved at previous workshops was issued in 1981 as ''Regional Workshops on Air Quality Modeling: A Summary Report.''[17] That report clarified procedures not specifically defined in the 1978 guideline and was issued to ensure the consistent interpretation of model requirements from Region to Region. Similar workshops for the purpose of clarifying guideline procedures or providing detailed instructions for the use of those procedures are anticipated in the future.

3.3.2.2 *Recommendations*. The Regional Office should always be consulted for information and guidance concerning modeling methods and interpretations of modeling guidance, and to ensure that the air quality model user has available the latest most up-to-date policy and procedures.

4.0 Simple-Terrain Stationary Source Models

4.1 Discussion

Simple terrain, as used here, is considered to be an area where terrain features are all lower in elevation than the top of the stack of the source(s) in question. The models recommended in this section are generally used in the air quality impact analysis of stationary sources for most criteria pollutants. The averaging time of the concentration estimates produced by these models ranges from 1 hour to an annual average.

Model evaluation exercises have been conducted to determine the ''best, most appropriate point source model'' for use in simple terrain.[8,12] However, no one model has been found to be clearly superior. Thus, based on past use, public familiarity, and availability CRSTER remains the recommended model for rural, simple terrain, single point source applications. Similar determinations were made for the other refined models that are identified in the following sections.

4.2 Recommendations

4.2.1 Screening Techniques

Point source screening techniques are an acceptable approach to air quality analyses. One such approach is contained in the EPA document ''Screening Procedures for Estimating the Air Quality Impact of Stationary Sources.''[18] A computerized version of the screening technique, SCREEN2, is available.[19,20] For the current version of SCREEN, see reference 20.

All screening procedures should be adjusted to the site and problem at hand. Close attention should be paid to whether the area should be classified urban or rural in accordance with Section 8.2.8. The climatology of the area should be studied to help define the worst-case meteorological conditions. Agreement should be reached between the model user and the reviewing authority on the choice of the screening model for each analysis, and on the input data as well as the ultimate use of the results.

4.2.2 Refined Analytical Techniques

Table 4–1 lists preferred models for selected applications. These preferred models should be used for the sources, land use categories and averaging times indicated in the table. A brief description of each of these models is found in appendix A. Also listed in that appendix are the model input requirements, the standard options that should be selected when running the program and output options.

When modeling for compliance with short term NAAQS and PSD increments is of primary concern, the short term models listed in Table 4-l may also be used to provide long term concentration estimates. When modeling for sources for which long term standards alone are applicable (e.g., lead), then the long term models should be used.

The conversion from long term to short term concentration averages by any transformation technique is not acceptable in regulatory applications.

TABLE 4–1.—PREFERRED MODELS FOR SELECTED APPLICATIONS IN SIMPLE TERRAIN

	Land use	Model[1]
Short Term (i.e., 1–24 hours):		
Single Source	Rural	CRSTER
	Urban	RAM
Multiple Source	Rural	MPTER
	Urban	RAM
Complicated Sources[2]	Rural/Urban	ISCST[3]
Buoyant Industrial Line Sources.	Rural	BLP
Long Term (i.e., monthly, seasonal or annual):		
Single Source	Rural	CRSTER
	Urban	RAM
Multiple Source	Rural	MPTER

TABLE 4–1.—PREFERRED MODELS FOR SELECTED APPLICATIONS IN SIMPLE TERRAIN—Continued

	Land use	Model [1]
	Urban	CDM 2.0 or RAM [4]
Complicated Sources [2]	Rural/Urban	ISCLT [3]
Buoyant Industrial Line Sources.	Rural	BLP
* * * * *		

[1] The models as listed here reflect the applications for which they were originally intended. Several of these models have been adapted to contain options which allow them to be interchanged. For example, ISCST could be substituted for ISCLT. Similarly, for a point source application, ISCST with urban option can be substituted for RAM. Where a substitution is convenient to the user and equivalent estimates are assured, it may be made.

[2] Complicated sources are those with special problems such as aerodynamic downwash, particle deposition, volume and area sources, etc.

[3] For the current version of ISC, see reference 58 and note the model description provided in Appendix A of this document.

[4] If only a few sources in an urban area are to be modeled, RAM should be used.

5.0 MODEL USE IN COMPLEX TERRAIN

5.1 Discussion

For the purpose of this guideline, complex terrain is defined as terrain exceeding the height of the stack being modeled. Complex terrain dispersion models are normally applied to stationary sources of pollutants such as SO_2 and particulates.

A major outcome from the EPA Complex Terrain Model Development project has been the publication of a refined dispersion model (CTDM) suitable for regulatory application to plume impaction assessments in complex terrain.[21] Although CTDM as originally produced was only applicable to those hours characterized as neutral or stable, a computer code for all stability conditions, CTDMPLUS,[19] together with a user's guide,[22] and on-site meteorological and terrain data processors,[23,24] is now available. Moreover, CTSCREEN,[19,25] a version of CTDMPLUS that does not require on-site meteorological data inputs, is also available as a screening technique.

The methods discussed in this section should be considered in two categories: (1) Screening techniques, and (2) the refined dispersion model, CTDMPLUS, discussed below and listed in Appendix A.

Continued improvements in ability to accurately model plume dispersion in complex terrain situations can be expected, e.g., from research on lee side effects due to terrain obstacles. New approaches to improve the ability of models to realistically simulate atmospheric physics, e.g., hybrid models which incorporate an accurate wind field analysis, will ultimately provide more appropriate tools for analyses. Such hybrid modeling techniques are also acceptable for regulatory applications after the appropriate demonstration and evaluation.[15]

5.2 Recommendations

Recommendations in this Section apply primarily to those situations where the impaction of plumes on terrain at elevations equal to or greater than the plume centerline during stable atmospheric conditions are determined to be the problem. If a violation of any NAAQS or the controlling increment is indicated by using any of the preferred screening techniques, then a refined complex terrain model may be used. Phenomena such as fumigation, wind direction shear, lee-side effects, building wake- or terrain-induced downwash, deposition, chemical transformation, variable plume trajectories, and long range transport are not addressed by the recommendations in this section.

Where site-specific data are used for either screening or refined complex terrain models, a data base of at least 1 full-year of meteorological data is preferred. If more data are available, they should be used. Meteorological data used in the analysis should be reviewed for both spatial and temporal representativeness.

Placement of receptors requires very careful attention when modeling in complex terrain. Often the highest concentrations are predicted to occur under very stable conditions, when the plume is near, or impinges on, the terrain. The plume under such conditions may be quite narrow in the vertical, so that even relatively small changes in a receptor's location may substantially affect the predicted concentration. Receptors within about a kilometer of the source may be even more sensitive to location. Thus, a dense array of receptors may be required in some cases. In order to avoid excessively large computer runs due to such a large array of receptors, it is often desirable to model the area twice. The first model run would use a moderate number of receptors carefully located over the area of interest. The second model run would use a more dense array of receptors in areas showing potential for high concentrations, as indicated by the results of the first model run.

When CTSCREEN or CTDMPLUS is used, digitized contour data must be first processed by the CTDM Terrain Processor[23] to provide hill shape parameters in a format suitable for direct input to CTDMPLUS. Then the user supplies receptors either through an interactive program that is part of the model or directly, by using a text editor; using both methods to select receptors will generally be necessary to assure that the maximum concentrations are estimated by either model. In cases where a terrain feature may ''appear to the plume'' as smaller, multiple hills, it may be necessary to model the terrain both as a single feature and as

multiple hills to determine design concentrations.

The user is encouraged to confer with the Regional Office if any unresolvable problems are encountered with any screening or refined analytical procedures, e.g., meteorological data, receptor siting, or terrain contour processing issues.

5.2.1 Screening Techniques

Five preferred screening techniques are currently available to aid in the evaluation of concentrations due to plume impaction during stable conditions: (1) for 24-hour impacts, the Valley Screening Technique[19] as outlined in the Valley Model User's Guide;[26] (2) CTSCREEN,[19] as outlined in the CTSCREEN User's Guide;[25] (3) COMPLEX I;[19] (4) SHORTZ/LONGZ;[19,27] and (5) Rough Terrain Dispersion Model (RTDM)[19,90] in its prescribed mode described below. As appropriate, any of these screening techniques may be used consistent with the needs, resources, and available data of the user.

The Valley Model, COMPLEX I, SHORTZ/LONGZ, and RTDM should be used only to estimate concentrations at receptors whose elevations are greater than or equal to plume height. For receptors at or below stack height, a simple terrain model should be used (see Chapter 4). Receptors between stack height and plume height present a unique problem since none of the above models were designed to handle receptors in this narrow regime, the definition of which will vary hourly as meteorological conditions vary. CTSCREEN may be used to estimate concentrations under all stability conditions at all receptors located ''on terrain'' above stack top, but has limited applicability in multi-source situations. As a result, the estimation of concentrations at receptors between stack height and plume height should be considered on a case-by-case basis after consultation with the EPA Regional Office; the most appropriate technique may be a function of the actual source(s) and terrain configuration unique to that application. One technique that will generally be acceptable, but is not necessarily preferred for any specific application, involves applying both a complex terrain model (except for the Valley Model) and a simple terrain model. The Valley Model should not be used for any intermediate terrain receptor. For each receptor between stack height and plume height, an hour-by-hour comparison of the concentration estimates from both models is made. The higher of the two modeled concentrations should be chosen to represent the impact at that receptor for that hour, and then used to compute the concentration for the appropriate averaging time(s). For the simple terrain models, terrain may have to be ''chopped off'' at stack height, since these models are frequently limited to receptors no greater than stack height.

5.2.1.1 *Valley Screening Technique.* The Valley Screening Technique may be used to determine 24-hour averages. This technique uses the Valley Model with the following worst-case assumptions for rural areas: (1) P-G stability ''F''; (2) wind speed of 2.5 m/s; and (3) 6 hours of occurrence. For urban areas the stability should be changed to ''P-G stability E.''

When using the Valley Screening Technique to obtain 24-hour average concentrations the following apply: (1) Multiple sources should be treated individually and the concentrations for each wind direction summed; (2) only one wind direction should be used (see User's Guide,[26] page 2–15) even if individual runs are made for each source; (3) for buoyant sources, the BID option may be used, and the option to use the 2.6 stable plume rise factor should be selected; (4) if plume impaction is likely on any elevated terrain closer to the source than the distance from the source to the final plume rise, then the transitional (or gradual) plume rise option for stable conditions should be selected.

The standard polar receptor grid found in the Valley Model User's Guide may not be sufficiently dense for all analyses if only one geographical scale factor is used. The user should choose an additional set of receptors at appropriate downwind distances whose elevations are equal to plume height minus 10 meters. Alternatively, the user may exercise the ''Valley equivalent'' option in COMPLEX I or SCREEN and note the comments above on the placement of receptors in complex terrain models.

When using the ''Valley equivalent'' option in COMPLEX I, set the wind profile exponents (PL) to 0.0, respectively, for all six stability classes.

5.2.1.2 *CTSCREEN.* CTSCREEN may be used to obtain conservative, yet realistic, worst-case estimates for receptors located on terrain above stack height. CTSCREEN accounts for the three-dimensional nature of plume and terrain interaction and requires detailed terrain data representative of the modeling domain. The model description and user's instructions are contained in the user's guide.[25] The terrain data must be digitized in the same manner as for CTDMPLUS and a terrain processor is available.[23] A discussion of the model's performance characteristics is provided in a technical paper.[91] CTSCREEN is designed to execute a fixed matrix of meteorological values for wind speed (u), standard deviation of horizontal and vertical wind speeds (σ_v, σ_w), vertical potential temperature gradient ($d\theta/dz$), friction velocity (u_*), Monin-Obukhov length (L), mixing height (z_i) as a function of terrain height, and wind directions for both

neutral/stable conditions and unstable convective conditions. Table 5–1 contains the matrix of meteorological variables that is used for each CTSCREEN analysis. There are 96 combinations, including exceptions, for each wind direction for the neutral/stable case, and 108 combinations for the unstable case. The specification of wind direction, however, is handled internally, based on the source and terrain geometry. The matrix was developed from examination of the range of meteorological variables associated with maximum monitored concentrations from the data bases used to evaluate the performance of CTDMPLUS. Although CTSCREEN is designed to address a single source scenario, there are a number of options that can be selected on a case-by-case basis to address multi-source situations. However, the Regional Office should be consulted, and concurrence obtained, on the protocol for modeling multiple sources with CTSCREEN to ensure that the worst case is identified and assessed. The maximum concentration output from CTSCREEN represents a worst-case 1-hour concentration. Time-scaling factors of 0.7 for 3-hour, 0.15 for 24-hour and 0.03 for annual concentration averages are applied internally by CTSCREEN to the highest 1-hour concentration calculated by the model.

5.2.1.3 *COMPLEX I.* If the area is rural, COMPLEX I may be used to estimate concentrations for all averaging times. COMPLEX I is a modification of the MPTER model that incorporates the plume impaction algorithm of the Valley Model.[19] It is a multiple-source screening technique that accepts hourly meteorological data as input. The output is the same as the normal MPTER output. When using COMPLEX I the following options should be selected: (1) set terrain adjustment IOPT(1) = 1; (2) set buoyancy induced dispersion IOPT (4) = 1; (3) set IOPT (25) = 1; (4) set the terrain adjustment values to 0.5, 0.5, 0.5 0.5, 0.0, 0.0, (respectively for six stability classes); and (5) set Z MIN = 10.

When using the ''Valley equivalent'' option (only) in COMPLEX I, set the wind profile exponents (PL) to 0.0, respectively, for all six stability classes. For all other regulatory uses of COMPLEX I, set the wind profile exponents to the values used in the simple terrain models, i.e., 0.07, 0.07, 0.10, 0.15, 0.35, and 0.55, respectively, for rural modeling.

Gradual plume rise should be used to estimate concentrations at nearby elevated receptors, if plume impaction is likely on any elevated terrain closer to the source than the distance from the source to the final plume rise (see Section 8.2.5).

5.2.1.4 *SHORTZ/LONGZ.* If the source is located in an urbanized (Section 8.2.8) complex terrain valley, then the suggested screening technique is SHORTZ for short-term averages or LONGZ for long-term averages. SHORTZ and LONGZ may be used as screening techniques in these complex terrain applications without demonstration and evaluation. Application of these models in other than urbanized valley situations will require the same evaluation and demonstration procedures as are required for all Appendix B models.

Both SHORTZ and LONGZ have a number of options. When using these models as screening techniques for urbanized valley applications, the options listed in Table 5–2 should be selected.

5.2.1.5 *RTDM (Screening Mode).* RTDM with the options specified in Table 5–3 may be used as a screening technique in rural complex terrain situations without demonstration and evaluation.

The RTDM screening technique can provide a more refined concentration estimate if on-site wind speed and direction characteristic of plume dilution and transport are used as input to the model. In complex terrain, these winds can seldom be estimated accurately from the standard surface (10m level) measurements. Therefore, in order to increase confidence in model estimates, EPA recommends that wind data input to RTDM should be based on fixed measurements at stack top height. For stacks greater than 100m, the measurement height may be limited to 100m in height relative to stack base. However, for very tall stacks, see guidance in section 9.3.3.2. This recommendation is broadened to include wind data representative of plume transport height where such data are derived from measurements taken with remote sensing devices such as SODAR. The data from both fixed and remote measurements should meet quality assurance and recovery rate requirements. The user should also be aware that RTDM in the screening mode accepts the input of measured wind speeds at only one height. The default values for the wind speed profile exponents shown in Table 5–3 are used in the model to determine the wind speed at other heights. RTDM uses wind speed at stack top to calculate the plume rise and the critical dividing streamline height, and the wind speed at plume transport level to calculate dilution. RTDM treats wind direction as constant with height.

RTDM makes use of the ''critical dividing streamline'' concept and thus treats plume interactions with terrain quite differently from other models such as SHORTZ and COMPLEX I. The plume height relative to the critical dividing streamline determines whether the plume impacts the terrain, or is lifted up and over the terrain. The receptor spacing to identify maximum impact concentrations is quite critical depending on the location of the plume in the vertical. Analysis of the expected plume height relative to the height of the critical dividing streamline should be performed for differing meteorological conditions in order to help develop an

appropriate array of receptors. Then it is advisable to model the area twice according to the suggestions in section 5.2.

5.2.1.6 *Restrictions.* For screening analyses using the Valley Screening Technique, COMPLEX I or RTDM, a sector greater than 22½° should not be allowed. Full ground reflection should always be used in the Valley Screening Technique and COMPLEX I.

5.2.2 Refined Analytical Techniques

When the results of the screening analysis demonstrate a possible violation of NAAQS or the controlling PSD increments, a more refined analysis may need to be conducted.

The Complex Terrain Dispersion Model PLus Algorithms for Unstable Situations (CTDMPLUS) is a refined air quality model that is preferred for use in all stability conditions for complex terrain applications. CTDMPLUS is a sequential model that requires five input files: (1) General program specifications; (2) a terrain data file; (3) a receptor file; (4) a surface meteorological data file; and (5) a user created meteorological profile data file. Two optional input files consist of hourly emissions parameters and a file containing upper air data from rawinsonde data files, e.g., a National Climatic Data Center TD–6201 file, unless there are no hours categorized as unstable in the record. The model description and user instructions are contained in Volume 1 of the User's Guide.[22] Separate publications[23,24] describe the terrain preprocessor system and the meteorological preprocessor program. In *Part I* of a technical article[92] is a discussion of the model and its preprocessors; the model's performance characteristics are discussed in *Part II* of the same article.[93] The size of the CTDMPLUS executable file on a personal computer is approximately 360K bytes. The model produces hourly average concentrations of stable pollutants, i.e., chemical transformation or decay of species and settling/deposition are not simulated. To obtain concentration averages corresponding to the NAAQS, e.g., 3- or 24-hour, or annual averages, the user must execute a postprocessor program such as CHAVG.[19] CTDMPLUS is applicable to all receptors on terrain elevations above stack top. However, the model contains no algorithms for simulating building downwash or the mixing or recirculation found in cavity zones in the lee of a hill. The path taken by a plume through an array of hills cannot be simulated. CTDMPLUS does not explicitly simulate calm meteorological periods, and for those situations the user should follow the guidance in Section 9.3.4. The user should follow the recommendations in the User's Guide under General Program Specifications for: (1) Selecting mixed layer heights, (2) setting minimum scalar wind speed to 1 m/s, and (3) scaling wind direction with height. Close coordination with the Regional Office is essential to insure a consistent, technically sound application of this model.

The performance of CTDMPLUS is greatly improved by the use of meteorological data from several levels up to plume height. However, due to the vast range of source-plume-hill geometries possible in complex terrain, detailed requirements for meteorological monitoring in support of refined analyses using CTDMPLUS should be determined on a case-by-case basis. The following general guidance should be considered in the development of a meteorological monitoring protocol for regulatory applications of CTDMPLUS and reviewed in detail by the Regional Office before initiating any monitoring. As appropriate, the On-Site Meteorological Program Guidance document[66] should be consulted for specific guidance on siting requirements for meteorological towers, selection and exposure of sensors, etc. As more experience is gained with the model in a variety of circumstances, more specific guidance may be developed.

Site specific meteorological data are critical to dispersion modeling in complex terrain and, consequently, the meteorological requirements are more demanding than for simple terrain. Generally, three different meteorological files (referred to as surface, profile, and rawin files) are needed to run CTDMPLUS in a regulatory mode.

The surface file is created by the meteorological preprocessor (METPRO)[24] based on on-site measurements or estimates of solar and/or net radiation, cloud cover and ceiling, and the mixed layer height. These data are used in METPRO to calculate the various surface layer scaling parameters (roughness length, friction velocity, and Monin-Obukhov length) which are needed to run the model. All of the user inputs required for the surface file are based either on surface observations or on measurements at or below 10m.

The profile data file is prepared by the user with on-site measurements (from at least three levels) of wind speed, wind direction, turbulence, and potential temperature. These measurements should be obtained up to the representative plume height(s) of interest (i.e., the plume height(s) under those conditions important to the determination of the design concentration). The representative plume height(s) of interest should be determined using an appropriate complex terrain screening procedure (e.g., CTSCREEN) and should be documented in the monitoring/modeling protocol. The necessary meteorological measurements should be obtained from an appropriately sited meteorological tower augmented by SODAR if the representative plume height(s) of interest exceed 100m. The meteorological tower need not exceed the lesser of the representative plume height of interest (the highest plume height

if there is more than one plume height of interest) or 100m.

Locating towers on nearby terrain to obtain stack height or plume height measurements for use in profiles by CTDMPLUS should be avoided unless it can clearly be demonstrated that such measurements would be representative of conditions affecting the plume.

The rawin file is created by a second meteorological preprocessor (READ62)[24] based on NWS (National Weather Service) upper air data. The rawin file is used in CTDMPLUS to calculate vertical potential temperature gradients for use in estimating plume penetration in unstable conditions. The representativeness of the off-site NWS upper air data should be evaluated on a case-by-case basis.

In the absence of an appropriate refined model, screening results may need to be used to determine air quality impact and/or emission limits.

TABLE 5–1a.—NEUTRAL/STABLE METEOROLOGICAL MATRIX FOR CTSCREEN

Variable	Specific Values				
U (m/s)	1.0	2.0	3.0	4.0	5.0
σ_v (m/s)	0.3	0.75	.....	.....	.....
σ_w (m/s)	0.08	0.15	0.30	0.75	.....
$\Delta\Theta/\Delta z$ (K/m)	0.01	0.02	0.035	.....	.....
WD (Wind direction optimized internally for each meteorological combination)					

Exceptions:
(1) If $U \leq 2$ m/s and $\sigma_v \leq 0.3$ m/s, then include $\sigma_w = 0.04$ m/s.
(2) If $\sigma_w = 0.75$ m/s and $U \geq 3.0$ m/s, then $\Delta\Theta/\Delta z$ is limited to ≤ 0.01 K/m.
(3) If $U \geq 4$ m/s, then $\sigma_w \geq 0.15$ m/s.
(4) $\sigma_w \leq \sigma_v$

TABLE 5–1b.—UNSTABLE/CONVECTIVE METEOROLOGICAL MATRIX FOR CTSCREEN

Variable	Specific Values				
U (m/s)	1.0	2.0	3.0	4.0	5.0
u_* (m/s)	0.1	0.3	0.5	.....	.....
L (m)	−10	−50	−90	.....	.....
$\Delta\Theta/\Delta z$ (K/m) 0.030 (potential temperature gradient above z_i)					
z_i (m)	0.5h	1.0h	1.5h	.....	.....

Where h = terrain height.

TABLE 5–2.—PREFERRED OPTIONS FOR THE SHORTZ/LONGZ COMPUTER CODES WHEN USED IN A SCREENING MODE

Option	Selection
I Switch 9	If using NWS data, set = 0. If using site-specific data, check with the Regional Office.
I Switch 17	Set = 1 (urban option).
GAMMA 1	Use default values (0.6 entrainment coefficient).
GAMMA 2	Always default to ''stable''.
XRY	Set = 0 (50m rectilinear expansion distance).
NS, VS, FRQ (SHORTZ) (particle size, etc.)	Do not use (applicable only in flat terrain.) NUS, VS, FRQ (LONGZ)
ALPHA	Select 0.9.
SIGEPU	(Use Cramer curves (default); if site-specific turbulence data are available, see Regional Office for advice. (dispersion parameters) SIGAPU
P (wind profile)	Select default values given in Table 2–2 of User's Instructions; if site-specific data are available, see Regional Office for advice.

TABLE 5–3.—PREFERRED OPTIONS FOR THE RTDM COMPUTER CODE WHEN USED IN A SCREENING MODE

Parameter	Variable	Value	Remarks
PR001–003	SCALE		Scale factors assuming horizontal distance is in kilometers, vertical distance is in feet, and wind speed is in meters per second.
PR004	ZWIND1	Wind measurement height.	See Section 5.2.1.4.
	ZWIND2	Not used	Height of second anemometer.
	IDILUT	1	Dilution wind speed scaled to plume height.
	ZA	0 (default)	Anemometer-terrain height above stack base.
PR005	EXPON	0.09, 0.11, 0.12, 0.14, 0.2, 0.3 (default).	Wind profile exponents.
PR006	ICOEF	3 (default)	Briggs Rural/ASME (1979) dispersion parameters.
PR009	IPPP	0 (default)	Partial plume penetration; not used.
PR010	IBUOY	1 (default)	Buoyancy-enhanced dispersion is used.
	ALPHA	3.162 (default)	Buoyancy-enhanced dispersion coefficient.
PR011	IDMX	1 (default)	Unlimited mixing height for stable conditions.
PR012	ITRANS	1 (default)	Transitional plume rise is used.
PR.013	TERCOR	6*0.5 (default)	Plume patch correction factors.
PR014	RVPTG	0.02, 0.035 (default)	Vertical potential temperature gradient values for stabilities E and F.
PR015	ITIPD	1	Stack-tip downwash is used.
PR020	ISHEAR	0 (default)	Wind shear; not used
PR022	IREFL	1 (default)	Partial surface reflection is used.
PR023	IHORIZ	2 (default)	Sector averaging.
	SECTOR	6*22.5 (default)	Using 22.5° sectors.
PR016 to 019; 021; and 024.	IY, IZ, IRVPTG, IHVPTG; IEPS; IEMIS	0	Hourly values of turbulence, vertical potential temperature gradient, wind speed profile exponents, and stack emissions are not used.

6.0 MODELS FOR OZONE, CARBON MONOXIDE AND NITROGEN DIOXIDE

6.1 Discussion

Models discussed in this section are applicable to pollutants often associated with mobile sources, e.g., ozone (O_3), carbon monoxide (CO) and nitrogen dioxide (NO_2). Where stationary sources of CO and NO_2 are of concern, the reader is referred to sections 4 and 5.

A control agency with jurisdiction over areas with significant ozone problems and which has sufficient resources and data to use a photochemical dispersion model is encouraged to do so. Experience with and evaluations of the Urban Airshed Model show it to be an acceptable, refined approach, and better data bases are becoming available that support the more sophisticated analytical procedures. However, empirical models (e.g., EKMA) fill the gap between more sophisticated photochemical dispersion models and proportional (rollback) modeling techniques and may be the only applicable procedure if the available data bases are insufficient for refined dispersion modeling.

Models for assessing the impact of carbon monoxide emissions are needed for a number of different purposes, e.g., to evaluate the effects of point sources, congested intersections and highways, as well as the cumulative effect on ambient CO concentrations of all sources of CO in an urban area.[94,95]

Nitrogen oxides are reactive and also an important contribution to the photochemical ozone problem. They are usually of most concern in areas of high ozone concentrations. Unless suitable photochemical dispersion models are used, assumptions regarding the conversion of NO to NO_2 are required when modeling. Site-specific conversion factors may be developed. If site-specific conversion factors are not available or photochemical models are not used, NO_2 modeling should be considered only a screening procedure.

6.2 Recommendations

6.2.1 Models for Ozone

The Urban Airshed Model (UAM)[19,28] is recommended for photochemical or reactive pollutant modeling applications involving entire urban areas. To ensure proper execution of this numerical model, users must satisfy the extensive input data requirements for the model as listed in appendix A and the users guide. Users are also referred to the ''Guideline for Regulatory Application of the Urban Airshed Model''[29] for additional data requirements and procedures for operating this model.

The empirical model, City-specific EKMA,[19, 30–33] has limited applicability for urban ozone analyses. Model users should consult the appropriate Regional Office on a

case-by-case basis concerning acceptability of this modeling technique.

Appendix B contains some additional models that may be applied on a case-by-case basis for photochemical or reactive pollutant modeling. Other photochemical models, including multi-layered trajectory models, that are available may be used if shown to be appropriate. Most photochemical dispersion models require emission data on individual hydrocarbon species and may require three dimensional meteorological information on an hourly basis. Reasonably sophisticated computer facilities are also often required. Because the input data are not universally available and studies to collect such data are very resource intensive, there are only limited evaluations of those models.

For those cases which involve estimating the impact on ozone concentrations due to stationary sources of VOC and NO_x, whether for permitting or other regulatory cases, the model user should consult the appropriate Regional Office on the acceptability of the modeling technique.

Proportional (rollback/forward) modeling is not an acceptable procedure for evaluating ozone control strategies.

6.2.2 Models for Carbon Monoxide

For analyzing CO impacts at roadway intersections, users should follow the procedures in the ''Guideline for Modeling Carbon Monoxide from Roadway Intersections''.[34] The recommended model for such analyses is CAL3QHC.[35] This model combines CALINE3 (already in Appendix A) with a traffic model to calculate delays and queues that occur at signalized intersections. In areas where the use of either TEXIN2 or CALINE4 has previously been established, its use may continue. The capability exists for these intersection models to be used in either a screening or refined mode. The screening approach is described in reference 34; a refined approach may be considered on a case-by-case basis. The latest version of the MOBILE (mobile source emission factor) model should be used for emissions input to intersection models.

For analyses of highways characterized by uninterrupted traffic flows, CALINE3 is recommended, with emissions input from the latest version of the MOBILE model.

The recommended model for urban areawide CO analyses is RAM or Urban Airshed Model (UAM); see appendix A. Information on SIP development and requirements for using these models can be found in references 34, 96, 97 and 98.

Where point sources of CO are of concern, they should be treated using the screening and refined techniques described in Section 4 or 5 of the Guideline.

6.2.3 Models for Nitrogen Dioxide (Annual Average)

a. A tiered screening approach is recommended to obtain annual average estimates of NO_2 from point sources for New Source Review analysis, including PSD, and for SIP planning purposes. This multi-tiered approach is conceptually shown in Figure 6–1 below:

FIGURE 6–1.—MULTI-TIERED SCREENING APPROACH FOR ESTIMATING ANNUAL NO_2 CONCENTRATIONS FROM POINT SOURCES

Tier 1:
Assume Total Conversion of NO to NO_2

Tier 2:
Multiply Annual NO_X Estimate by Empirically Derived NO_2 / NO_X Ratio

b. For Tier 1 (the initial screen), use an appropriate Gaussian model from appendix A to estimate the maximum annual average concentration and assume a total conversion of NO to NO_2. If the concentration exceeds the NAAQS and/or PSD increments for NO_2, proceed to the 2nd level screen.

c. For Tier 2 (2nd level) screening analysis, multiply the Tier 1 estimate(s) by an empirically derived NO_2/NO_X value of 0.75 (annual national default).[36] An annual NO_2/NO_X ratio differing from 0.75 may be used if it can be shown that such a ratio is based on data likely to be representative of the location(s) where maximum annual impact from the individual source under review occurs. In the case where several sources contribute to consumption of a PSD increment, a locally derived annual NO_2/NO_X ratio should also be shown to be representative of the location where the maximum collective impact from the new plus existing sources occurs.

d. In urban areas, a proportional model may be used as a preliminary assessment to evaluate control strategies to meet the NAAQS for multiple minor sources, i.e. minor point, area and mobile sources of NO_X; concentrations resulting from major point sources should be estimated separately as discussed above, then added to the impact of the minor sources. An acceptable screening technique for urban complexes is to assume that all NO_X is emitted in the form of NO_2 and to use a model from appendix A for nonreactive pollutants to estimate NO_2 concentrations. A more accurate estimate can be obtained by: (1) calculating the annual average concentrations of NO_X with an urban model, and (2) converting these estimates to NO_2 concentrations using an empirically derived annual NO_2/NO_X ratio. A value of 0.75 is recommended for this ratio. However, a spatially averaged annual NO_2/NO_X ratio

may be determined from an existing air quality monitoring network and used in lieu of the 0.75 value if it is determined to be representative of prevailing ratios in the urban area by the reviewing agency. To ensure use of appropriate locally derived annual NO_2/NO_X ratios, monitoring data under consideration should be limited to those collected at monitors meeting siting criteria defined in 40 CFR part 58, appendix D as representative of ''neighborhood'', ''urban'', or ''regional'' scales.

Furthermore, the highest annual spatially averaged NO_2/NO_X ratio from the most recent 3 years of complete data should be used to foster conservatism in estimated impacts.

e. To demonstrate compliance with NO_2 PSD increments in urban areas, emissions from major and minor sources should be included in the modeling analysis. Point and area source emissions should be modeled as discussed above. If mobile source emissions do not contribute to localized areas of high ambient NO_2 concentrations, they should be modeled as area sources. When modeled as area sources, mobile source emissions should be assumed uniform over the entire highway link and allocated to each area source grid square based on the portion of highway link within each grid square. If localized areas of high concentrations are likely, then mobile sources should be modeled as line sources with the preferred model ISCLT2.

f. More refined techniques to handle special circumstances may be considered on a case-by-case basis and agreement with the reviewing authority should be obtained. Such techniques should consider individual quantities of NO and NO_2 emissions, atmospheric transport and dispersion, and atmospheric transformation of NO to NO_2. Where they are available, site-specific data on the conversion of NO to NO_2 may be used. Photochemical dispersion models, if used for other pollutants in the area, may also be applied to the NO_X problem.

7.0 Other Model Requirements

7.1 Discussion

This section covers those cases where specific techniques have been developed for special regulatory programs. Most of the programs have, or will have when fully developed, separate guidance documents that cover the program and a discussion of the tools that are needed. The following paragraphs reference those guidance documents, when they are available. No attempt has been made to provide a comprehensive discussion of each topic since the reference documents were designed to do that. This section will undergo periodic revision as new programs are added and new techniques are developed.

Other Federal agencies have also developed specific modeling approaches for their own regulatory or other requirements. An example of this is the three-volume manual issued by the U.S. Department of Housing and Urban Development, ''Air Quality Considerations in Residential Planning.''[37] Although such regulatory requirements and manuals may have come about because of EPA rules or standards, the implementation of such regulations and the use of the modeling techniques is under the jurisdiction of the agency issuing the manual or directive.

The need to estimate impacts at distances greater than 50km (the nominal distance to which EPA considers most Gaussian models applicable) is an important one especially when considering the effects from secondary pollutants. Unfortunately, models submitted to EPA have not as yet undergone sufficient field evaluation to be recommended for general use. Existing data bases from field studies at mesoscale and long range transport distances are limited in detail. This limitation is a result of the expense to perform the field studies required to verify and improve mesoscale and long range transport models. Particularly important and sparse are meteorological data adequate for generating three dimensional wind fields. Application of models to complicated terrain compounds the difficulty. EPA has completed limited evaluation of several long range transport (LRT) models against two sets of field data. The evaluation results are discussed in the document, ''Evaluation of Short-Term Long-Range Transport Models.''[99,100] For the time being, long range and mesoscale transport models must be evaluated for regulatory use on a case-by-case basis.

There are several regulatory programs for which air pathway analysis procedures and modeling techniques have been developed. For continuous emission releases, ISC forms the basis of many analytical techniques. EPA is continuing to evaluate the performance of a number of proprietary and public domain models for intermittent and non-stack emission releases. Until EPA completes its evaluation, it is premature to recommend specific models for air pathway analyses of intermittent and non-stack releases in this guideline.

Regional scale models are used by EPA to develop and evaluate national policy and assist State and local control agencies. Two such models are the Regional Oxidant Model (ROM)[101,102,103] and the Regional Acid Deposition Model (RADM).[104] Due to the level of resources required to apply these models, it is not envisioned that regional scale models will be used directly in most model applications.

7.2 Recommendations

7.2.1 Fugitive Dust/Fugitive Emissions

Fugitive dust usually refers to the dust put into the atmosphere by the wind blowing

over plowed fields, dirt roads or desert or sandy areas with little or no vegetation. Reentrained dust is that which is put into the air by reason of vehicles driving over dirt roads (or dirty roads) and dusty areas. Such sources can be characterized as line, area or volume sources. Emission rates may be based on site-specific data or values from the general literature.

Fugitive emissions are usually defined as emissions that come from an industrial source complex. They include the emissions resulting from the industrial process that are not captured and vented through a stack but may be released from various locations within the complex. Where such fugitive emissions can be properly specified, the ISC model, with consideration of gravitational settling and dry deposition, is the recommended model. In some unique cases a model developed specifically for the situation may be needed.

Due to the difficult nature of characterizing and modeling fugitive dust and fugitive emissions, it is recommended that the proposed procedure be cleared by the appropriate Regional Office for each specific situation before the modeling exercise is begun.

7.2.2 Particulate Matter

The new particulate matter NAAQS, promulgated on July 1, 1987 (52 FR 24634), includes only particles with an aerodynamic diameter less than or equal to a nominal 10 micrometers (PM–10). EPA has also proposed regulations for PSD increments measured as PM–10 in a notice published on October 5, 1989 (54 FR 41218).

Screening techniques like those identified in section 4 are also applicable to PM–10 and to large particles. It is recommended that subjectively determined values for ''half-life'' or pollutant decay not be used as a surrogate for particle removal. Conservative assumptions which do not allow removal or transformation are suggested for screening. Proportional models (rollback/forward) may not be applied for screening analysis, unless such techniques are used in conjunction with receptor modeling.

Refined models such as those in Section 4 are recommended for PM–10 and large particles. However, where possible, particle size, gas-to-particle formation, and their effect on ambient concentrations may be considered. For urban-wide refined analyses CDM 2.0 or RAM should be used. CRSTER and MPTER are recommended for point sources of small particles. For source-specific analyses of complicated sources, the ISC model is preferred. No model recommended for general use at this time accounts for secondary particulate formation or other transformations in a manner suitable for SIP control strategy demonstrations. Where possible, the use of receptor models[38,39,105,106,107] in conjunction with dispersion models is encouraged to more precisely characterize the emissions inventory and to validate source specific impacts calculated by the dispersion model. A SIP development guideline,[108] model reconciliation guidance,[106] and an example model application[109] are available to assist in PM–10 analyses and control strategy development.

Under certain conditions, recommended dispersion models are not available or applicable. In such circumstances, the modeling approach should be approved by the appropriate Regional Office on a case-by-case basis. For example, where there is no recommended air quality model and area sources are a predominant component of PM–10, an attainment demonstration may be based on rollback of the apportionment derived from two reconciled receptor models, if the strategy provides a conservative demonstration of attainment. At this time, analyses involving model calculations for distances beyond 50km and under stagnation conditions should also be justified on a case-by-case basis (see Sections 7.2.6 and 8.2.10).

As an aid to assessing the impact on ambient air quality of particulate matter generated from prescribed burning activities, reference 110 is available.

7.2.3 Lead

The air quality analyses required for lead implementation plans are given in §§51.83, 51.84 and 51.85 of 40 CFR part 51. Sections 51.83 and 51.85 require the use of a modified rollback model as a minimum to demonstrate attainment of the lead air quality standard but the use of a dispersion model is the preferred approach. Section 51.83 requires the analysis of an entire urban area if the measured lead concentration in the urbanized area exceeds a quarterly (three month) average of 4.0 $\mu g/m^3$. Section 51.84 requires the use of a dispersion model to demonstrate attainment of the lead air quality standard around specified lead point sources. For other areas reporting a violation of the lead standard, §51.85 requires an analysis of the area in the vicinity of the monitor reporting the violation. The NAAQS for lead is a quarterly (three month) average, thus requiring the use of modeling techniques that can provide long-term concentration estimates.

The SIP should contain an air quality analysis to determine the maximum quarterly lead concentration resulting from major lead point sources, such as smelters, gasoline additive plants, etc. For these applications the ISC model is preferred, since the model can account for deposition of particles and the impact of fugitive emissions. If the source is located in complicated terrain or is subject to unusual climatic conditions, a case-specific review by the appropriate Regional Office may be required.

In modeling the effect of traditional line sources (such as a specific roadway or highway) on lead air quality, dispersion models applied for other pollutants can be used. Dispersion models such as CALINE3 and APRAC–3 have been widely used for modeling carbon monoxide emissions from highways. However, where deposition is of concern, the line source treatment in ISC may be used. Also, where there is a point source in the middle of a substantial road network, the lead concentrations that result from the road network should be treated as background (see Section 9.2); the point source and any nearby major roadways should be modeled separately using the ISC model.

To model an entire major urban area or to model areas without significant sources of lead emissions, as a minimum a proportional (rollback) model may be used for air quality analysis. The rollback philosophy assumes that measured pollutant concentrations are proportional to emissions. However, urban or other dispersion models are encouraged in these circumstances where the use of such models is feasible.

For further information concerning the use of models in the development of lead implementation plans, the documents ''Supplementary Guidelines for Lead Implementation Plans,''[40] and ''Updated Information on Approval and Promulgation of Lead Implementation Plans,''[41] should be consulted.

7.2.4 Visibility

The visibility regulations as promulgated in December 1980[b] require consideration of the effect of new sources on the visibility values of Federal Class I areas. The state of scientific knowledge concerning identifying, monitoring, modeling, and controlling visibility impairment is contained in an EPA report ''Protecting Visibility: An EPA Report to Congress''.[42] In 1985, EPA promulgated Federal Implementation Plans (FIPs) for states without approved visibility provisions in their SIPs. A monitoring plan was established as part of the FIPs.[c]

Guidance and a screening model, VISCREEN, is contained in the EPA document ''Workbook for Plume Visual Impact Screening and Analysis (Revised).''[43] VISCREEN can be used to calculate the potential impact of a plume of specified emissions for specific transport and dispersion conditions. If a more comprehensive analysis is required, any refined model should be selected in consultation with the EPA Regional Office and the appropriate Federal Land Manager who is responsible for determining whether there is an adverse effect by a plume on a Class I area.

PLUVUE II, listed in Appendix B, may be applied on a case-by-case basis when refined plume visibility evaluations are needed. Plume visibility models have been evaluated against several data sets.[44,45]

7.2.5 Good Engineering Practice Stack Height

The use of stack height credit in excess of Good Engineering Practice (GEP) stack height or credit resulting from any other dispersion technique is prohibited in the development of emission limitations by 40 CFR 51.118 and 40 CFR 51.164. The definitions of GEP stack height and dispersion technique are contained in 40 CFR 51.100. Methods and procedures for making the appropriate stack height calculations, determining stack height credits and an example of applying those techniques are found in references 46, 47, 48, and 49.

If stacks for new or existing major sources are found to be less than the height defined by EPA's refined formula for determining GEP height,[d] then air quality impacts associated with cavity or wake effects due to the nearby building structures should be determined. Detailed downwash screening procedures[18] for both the cavity and wake regions should be followed. If more refined concentration estimates are required, the Industrial Source Complex (ISC) model contains algorithms for building wake calculations and should be used. Fluid modeling can provide a great deal of additional information for evaluating and describing the cavity and wake effects.

7.2.6 Long Range Transport (LRT) (i.e., beyond 50km)

Section 165(e) of the Clean Air Act requires that suspected significant impacts on PSD Class I areas be determined. However, 50km is the useful distance to which most Gaussian models are considered accurate for setting emission limits. Since in many cases PSD analyses may show that Class I areas may be threatened at distances greater than 50km from new sources, some procedure is needed to (1) determine if a significant impact will occur, and (2) identify the model to be used in setting an emission limit if the Class I increments are threatened (models for this purpose should be approved for use on a case-by-case basis as required in section 3.2). This procedure and the models selected for use should be determined in consultation with the EPA Regional Office and the appropriate Federal Land Manager (FLM). While the ultimate decision on whether a Class I area is adversely affected is the responsibility of the permitting authority, the FLM has

[b] 40 CFR 51.300–307.

[c] 40 CFR 51.300–307.

[d] The EPA refined formula height is defined as H + 1.5L (see Reference 46).

an affirmative responsibility to protect air quality related values that may be affected.

If LRT is determined to be important, then estimates utilizing an appropriate refined model for receptors at distances greater than 50 km should be obtained. MESOPUFF II, listed in appendix B, may be applied on a case-by-case basis when LRT estimates are needed. Additional information on applying this model is contained in the EPA document ''A Modeling Protocol For Applying MESOPUFF II to Long Range Transport Problems''.[111]

7.2.7 Modeling Guidance for Other Governmental Programs

When using the models recommended or discussed in this guideline in support of programmatic requirements not specifically covered by EPA regulations, the model user should consult the appropriate Federal or State agency to ensure the proper application and use of that model. For modeling associated with PSD permit applications that involve a Class I area, the appropriate Federal Land Manager should be consulted on all modeling questions.

The Offshore and Coastal Dispersion (OCD) model[112] was developed by the Minerals Management Service and is recommended for estimating air quality impact from offshore sources on onshore flat terrain areas. The OCD model is not recommended for use in air quality impact assessments for onshore sources. Sources located on or just inland of a shoreline where fumigation is expected should be treated in accordance with section 8.2.9.

The Emissions and Dispersion Modeling System (EDMS)[113] was developed by the Federal Aviation Administration and the United States Air Force and is recommended for air quality assessment of primary pollutant impacts at airports or air bases. Regulatory application of EDMS is intended for estimating the cumulative effect of changes in aircraft operations, point source, and mobile source emissions on pollutant concentrations. It is not intended for PSD, SIP, or other regulatory air quality analyses of point or mobile sources at or peripheral to airport property that are independent of changes in aircraft operations. If changes in other than aircraft operations are associated with analyses, a model recommended in chapter 4, 5, or 6 should be used.

7.2.8 Air Pathway Analyses (Air Toxics and Hazardous Waste)

Modeling is becoming an increasingly important tool for regulatory control agencies to assess the air quality impact of releases of toxics and hazardous waste materials. Appropriate screening techniques[114 115] for calculating ambient concentrations due to various well-defined neutrally buoyant toxic/hazardous pollutant releases are available.

Several regulatory programs within EPA have developed modeling techniques and guidance for conducting air pathway analyses as noted in references 116–129. ISC forms the basis of the modeling procedures for air pathway analyses of many of these regulatory programs and, where identified, is appropriate for obtaining refined ambient concentration estimates of neutrally buoyant continuous air toxic releases from traditional sources. Appendix A to this Guideline contains additional models appropriate for obtaining refined estimates of continuous air toxic releases from traditional sources. Appendix B contains models that may be used on a case-by-case basis for obtaining refined estimates of denser-than-air intermittent gaseous releases, e.g., DEGADIS;[130] guidance for the use of such models is also available.[131]

Many air toxics models require input of chemical properties and/or chemical engineering variables in order to appropriately characterize the source emissions prior to dispersion in the atmosphere; reference 132 is one source of helpful data. In addition, EPA has numerous programs to determine emission factors and other estimates of air toxic emissions. The Regional Office should be consulted for guidance on appropriate emission estimating procedures and any uncertainties that may be associated with them.

8.0 General Modeling Considerations

8.1 Discussion

This section contains recommendations concerning a number of different issues not explicitly covered in other sections of this guide. The topics covered here are not specific to any one program or modeling area but are common to nearly all modeling analyses.

8.2 Recommendations

8.2.1 Design Concentrations

8.2.1.1 *Design Concentrations for Criteria Pollutants with Deterministic Standards.* An air quality analysis for SO_2, CO, Pb, and NO_2 is required to determine if the source will (1) cause a violation of the NAAQS, or (2) cause or contribute to air quality deterioration greater than the specified allowable PSD increment. For the former, background concentration (see Section 9.2) should be added to the estimated impact of the source to determine the design concentration. For the latter, the design concentration includes impact from all increment consuming sources.

If the air quality analyses are conducted using the period of meteorological input data recommended in section 9.3.1.2 (e.g., 5 years of NWS data or 1 year of site-specific data), then the design concentration based on the

highest, second-highest short term concentration or long term average, whichever is controlling, should be used to determine emission limitations to assess compliance with the NAAQS and to determine PSD increments.

When sufficient and representative data exist for less than a 5-year period from a nearby NWS site, or when on-site data have been collected for less than a full continuous year, or when it has been determined that the on-site data may not be temporally representative, then the highest concentration estimate should be considered the design value. This is because the length of the data record may be too short to assure that the conditions producing worst-case estimates have been adequately sampled. The highest value is then a surrogate for the concentration that is not to be exceeded more than once per year (the wording of the deterministic standards). Also, the highest concentration should be used whenever selected worst-case conditions are input to a screening technique. This specifically applies to the use of techniques such as outlined in ''Screening Procedures for Estimating the Air Quality Impact of Stationary Sources, Revised''.[18] Specific guidance for CO may be found in the ''Guideline for Modeling Carbon Monoxide from Roadway Intersections''.[34]

If the controlling concentration is an annual average value and multiple years of data (on-site or NWS) are used, then the design value is the highest of the annual averages calculated for the individual years. If the controlling concentration is a quarterly average and multiple years are used, then the highest individual quarterly average should be considered the design value.

As long a period of record as possible should be used in making estimates to determine design values and PSD increments. If more than 1 year of site-specific data is available, it should be used.

8.2.1.2 *Design Concentrations for Criteria Pollutants with Expected Exceedance Standards.* Specific instructions for the determination of design concentrations for criteria pollutants with expected exceedance standards, ozone and PM–10, are contained in special guidance documents for the preparation of SIPs for those pollutants.[86 108] For all SIP revisions the user should check with the Regional Office to obtain the most recent guidance documents and policy memoranda concerning the pollutant in question.

8.2.2 Critical Receptor Sites

Receptor sites for refined modeling should be utilized in sufficient detail to estimate the highest concentrations and possible violations of a NAAQS or a PSD increment. In designing a receptor network, the emphasis should be placed on receptor resolution and location, not total number of receptors. The selection of receptor sites should be a case-bycase determination taking into consideration the topography, the climatology, monitor sites, and the results of the initial screening procedure. For large sources (those equivalent to a 500 MW power plant) and where violations of the NAAQS or PSD increment are likely, 360 receptors for a polar coordinate grid system and 400 receptors for a rectangular grid system, where the distance from the source to the farthest receptor is 10km, are usually adequate to identify areas of high concentration. Additional receptors may be needed in the high concentration location if greater resolution is indicated by terrain or source factors.

8.2.3 Dispersion Coefficients

Gaussian models used in most applications should employ dispersion coefficients consistent with those contained in the preferred models in Appendix A. Factors such as averaging time, urban/rural surroundings, and type of source (point vs. line) may dictate the selection of specific coefficients. Generally, coefficients used in appendix A models are identical to, or at least based on, Pasquill-Gifford coefficients[50] in rural areas and McElroy-Pooler[51] coefficients in urban areas.

Research is continuing toward the development of methods to determine dispersion coefficients directly from measured or observed variables.[52 53] No method to date has proved to be widely applicable. Thus, direct measurement, as well as other dispersion coefficients related to distance and stability, may be used in Gaussian modeling only if a demonstration can be made that such parameters are more applicable and accurate for the given situation than are algorithms contained in the preferred models.

Buoyancy-induced dispersion (BID), as identified by Pasquill,[54] is included in the preferred models and should be used where buoyant sources, e.g., those involving fuel combustion, are involved.

8.2.4 Stability Categories

The Pasquill approach to classifying stability is generally required in all preferred models (Appendix A). The Pasquill method, as modified by Turner,[55] was developed for use with commonly observed meteorological data from the National Weather Service and is based on cloud cover, insolation and wind speed.

Procedures to determine Pasquill stability categories from other than NWS data are found in subsection 9.3. Any other method to determine Pasquill stability categories must be justified on a case-by-case basis.

For a given model application where stability categories are the basis for selecting dispersion coefficients, both σ_y and σ_z should

be determined from the same stability category. ''Split sigmas'' in that instance are not recommended.

Sector averaging, which eliminates the σ_y term, is generally acceptable only to determine long term averages, such as seasonal or annual, and when the meteorological input data are statistically summarized as in the STAR summaries. Sector averaging is, however, commonly acceptable in complex terrain screening methods.

8.2.5 Plume Rise

The plume rise methods of Briggs[56 57] are incorporated in the preferred models and are recommended for use in all modeling applications. No provisions in these models are made for fumigation or multistack plume rise enhancement or the handling of such special plumes as flares; these problems should be considered on a case-by-case basis.

Since there is insufficient information to identify and quantify dispersion during the transitional plume rise period, gradual plume rise is not generally recommended for use. There are two exceptions where the use of gradual plume rise is appropriate: (1) In complex terrain screening procedures to determine close-in impacts; (2) when calculating the effects of building wakes. The building wake algorithm in the ISC model incorporates and automatically (i.e., internally) exercises the gradual plume rise calculations. If the building wake is calculated to affect the plume for any hour, gradual plume rise is also used in downwind dispersion calculations to the distance of final plume rise, after which final plume rise is used.

Stack tip downwash generally occurs with poorly constructed stacks and when the ratio of the stack exit velocity to wind speed is small. An algorithm developed by Briggs (Hanna, et al.)[57] is the recommended technique for this situation and is found in the point source preferred models.

Where aerodynamic downwash occurs due to the adverse influence of nearby structures, the algorithms included in the ISC2 mode1[58] should be used.

8.2.6 Chemical Transformation

The chemical transformation of SO_2 emitted from point sources or single industrial plants in rural areas is generally assumed to be relatively unimportant to the estimation of maximum concentrations when travel time is limited to a few hours. However, in urban areas, where synergistic effects among pollutants are of considerable consequence, chemical transformation rates may be of concern. In urban area applications, a half-life of 4 hours[55] may be applied to the analysis of SO_2 emissions. Calculations of transformation coefficients from site-specific studies can be used to define a ''half-life'' to be used in a Gaussian model with any travel time, or in any application, if appropriate documentation is provided. Such conversion factors for pollutant half-life should not be used with screening analyses.

Complete conversion of NO to NO_2 should be assumed for all travel time when simple screening techniques are used to model point source emissions of nitrogen oxides. If a Gaussian model is used, and data are available on seasonal variations in maximum ozone concentrations, the Ozone Limiting Method[36] is recommended. In refined analyses, case-by case conversion rates based on technical studies appropriate to the site in question may be used. The use of more sophisticated modeling techniques should be justified for individual cases.

Use of models incorporating complex chemical mechanisms should be considered only on a case-by-case basis with proper demonstration of applicability. These are generally regional models not designed for the evaluation of individual sources but used primarily for region-wide evaluations. Visibility models also incorporate chemical transformation mechanisms which are an integral part of the visibility model itself and should be used in visibility assessments.

8.2.7 Gravitational Settling and Deposition

An ''infinite half-life'' should be used for estimates of particle concentrations when Gaussian models containing only exponential decay terms for treating settling and deposition are used.

Gravitational settling and deposition may be directly included in a model if either is a significant factor. One preferred model (ISC) contains settling and deposition algorithms and is recommended for use when particulate matter sources can be quantified and settling and deposition are problems.

8.2.8 Urban/Rural Classification

The selection of either rural or urban dispersion coefficients in a specific application should follow one of the procedures suggested by Irwin[59] and briefly described below. These include a land use classification procedure or a population based procedure to determine whether the character of an area is primarily urban or rural.

Land Use Procedure: (1) Classify the land use within the total area, A_o, circumscribed by a 3km radius circle about the source using the meteorological land use typing scheme proposed by Auer[60]; (2) if land use types I1, I2, C1, R2, and R3 account for 50 percent or more of A_o, use urban dispersion coefficients; otherwise, use appropriate rural dispersion coefficients.

Population Density Procedure: (1) Compute the average population density, $\bar{p}$ per square kilometer with A_o as defined above; (2) If $\bar{p}$ is

greater than 750 people/km^2, use urban dispersion coefficients; otherwise use appropriate rural dispersion coefficients.

Of the two methods the land use procedure is considered more definitive. Population density should be used with caution and should not be applied to highly industrialized areas where the population density may be low and thus a rural classification would be indicated, but the area is sufficiently built-up so that the urban land use criteria would be satisfied. In this case, the classification should already be ''urban'' and urban dispersion parameters should be used.

Sources located in an area defined as urban should be modeled using urban dispersion parameters. Sources located in areas defined as rural should be modeled using the rural dispersion parameters. For analyses of whole urban complexes, the entire area should be modeled as an urban region if most of the sources are located in areas classified as urban.

8.2.9 Fumigation

Fumigation occurs when a plume (or multiple plumes) is emitted into a stable layer of air and that layer is subsequently mixed to the ground either through convective transfer of heat from the surface or because of advection to less stable surroundings. Fumigation may cause excessively high concentrations but is usually rather short-lived at a given receptor. There are no recommended refined techniques to model this phenomenon. There are, however, screening procedures (see ''Screening Procedures for Estimating the Air Quality Impact of Stationary Sources''[18]) that may be used to approximate the concentrations. Considerable care should be exercised in using the results obtained from the screening techniques.

Fumigation is also an important phenomenon on and near the shoreline of bodies of water. This can affect both individual plumes and area-wide emissions. When fumigation conditions are expected to occur from a source or sources with tall stacks located on or just inland of a shoreline, this should be addressed in the air quality modeling analysis. The Shoreline Dispersion Model (SDM) listed in Appendix B may be applied on a case-by-case basis when air quality estimates under shoreline fumigation conditions are needed.[133] Information on the results of EPA's evaluation of this model together with other coastal fumigation models may be found in reference 134. Selection of the appropriate model for applications where shoreline fumigation is of concern should be determined in consultation with the Regional Office.

8.2.10 Stagnation

Stagnation conditions are characterized by calm or very low wind speeds, and variable wind directions. These stagnant meteorological conditions may persist for several hours to several days. During stagnation conditions, the dispersion of air pollutants, especially those from low-level emissions sources, tends to be minimized, potentially leading to relatively high ground-level concentrations.

When stagnation periods such as these are found to occur, they should be addressed in the air quality modeling analysis. WYNDvalley, listed in appendix B, may be applied on a case-by-case basis for stagnation periods of 24 hours or longer in valley-type situations. Caution should be exercised when applying the model to elevated point sources. Users should consult with the appropriate Regional Office prior to regulatory application of WYNDvalley.

8.2.11 Calibration of Models

Calibration of long term multi-source models has been a widely used procedure even though the limitations imposed by statistical theory on the reliability of the calibration process for long term estimates are well known.[61] In some cases, where a more accurate model is not available, calibration may be the best alternative for improving the accuracy of the estimated concentrations needed for control strategy evaluations.

Calibration of short term models is not common practice and is subject to much greater error and misunderstanding. There have been attempts by some to compare short term estimates and measurements on an event-by-event basis and then to calibrate a model with results of that comparison. This approach is severely limited by uncertainties in both source and meteorological data and therefore it is difficult to precisely estimate the concentration at an exact location for a specific increment of time. Such uncertainties make calibration of short term models of questionable benefit. Therefore, short term model calibration is unacceptable.

9.0 Model Input Data

Data bases and related procedures for estimating input parameters are an integral part of the modeling procedure. The most appropriate data available should always be selected for use in modeling analyses. Concentrations can vary widely depending on the source data or meteorological data used. Input data are a major source of inconsistencies in any modeling analysis. This section attempts to minimize the uncertainty associated with data base selection and use by identifying requirements for data used in modeling. A checklist of input data requirements for modeling analyses is included as appendix C. More specific data requirements and the format required for the individual

models are described in detail in the users' guide for each model.

9.1 Source Data

9.1.1 Discussion

Sources of pollutants can be classified as point, line and area/volume sources. Point sources are defined in terms of size and may vary between regulatory programs. The line sources most frequently considered are roadways and streets along which there are well-defined movements of motor vehicles, but they may be lines of roof vents or stacks such as in aluminum refineries. Area and volume sources are often collections of a multitude of minor sources with individually small emissions that are impractical to consider as separate point or line sources. Large area sources are typically treated as a grid network of square areas, with pollutant emissions distributed uniformly within each grid square.

Emission factors are compiled in an EPA publication commonly known as AP–42;[62] an indication of the quality and amount of data on which many of the factors are based is also provided. Other information concerning emissions is available in EPA publications relating to specific source categories. The Regional Office should be consulted to determine appropriate source definitions and for guidance concerning the determination of emissions from and techniques for modeling the various source types.

9.1.2 Recommendations

For point source applications the load or operating condition that causes maximum ground-level concentrations should be established. As a minimum, the source should be modeled using the design capacity (100 percent load). If a source operates at greater than design capacity for periods that could result in violations of the standards or PSD increments, this load[e] should be modeled. Where the source operates at substantially less than design capacity, and the changes in the stack parameters associated with the operating conditions could lead to higher ground level concentrations, loads such as 50 percent and 75 percent of capacity should also be modeled. A range of operating conditions should be considered in screening analyses; the load causing the highest concentration, in addition to the design load, should be included in refined modeling. The following example for a power plant is typical of the kind of data on source characteristics and operating conditions that may be needed. Generally, input data requirements for air quality models necessitate the use of metric units; where English units are common for engineering usage, a conversion to metric is required.

a. Plant layout. The connection scheme between boilers and stacks, and the distance and direction between stacks, building parameters (length, width, height, location and orientation relative to stacks) for plant structures which house boilers, control equipment, and surrounding buildings within a distance of approximately five stack heights.

b. Stack parameters. For all stacks, the stack height and inside diameter (meters), and the temperature (K) and volume flow rate (actual cubic meters per second) or exit gas velocity (meters per second) for operation at 100 percent, 75 percent and 50 percent load.

c. Boiler size. For all boilers, the associated megawatts, 10^6 BTU/hr, and pounds of steam per hour, and the design and/or actual fuel consumption rate for 100 percent load for coal (tons/hour), oil (barrels/hour), and natural gas (thousand cubic feet/hour).

d. Boiler parameters. For all boilers, the percent excess air used, the boiler type (e.g., wet bottom, cyclone, etc.), and the type of firing (e.g., pulverized coal, front firing, etc.).

e. Operating conditions. For all boilers, the type, amount and pollutant contents of fuel, the total hours of boiler operation and the boiler capacity factor during the year, and the percent load for peak conditions.

f. Pollution control equipment parameters. For each boiler served and each pollutant affected, the type of emission control equipment, the year of its installation, its design efficiency and mass emission rate, the data of the last test and the tested efficiency, the number of hours of operation during the latest year, and the best engineering estimate of its projected efficiency if used in conjunction with coal combustion; data for any anticipated modifications or additions.

g. Data for new boilers or stacks. For all new boilers and stacks under construction and for all planned modifications to existing boilers or stacks, the scheduled date of completion, and the data or best estimates available for items (a) through (f) above following completion of construction or modification.

In stationary point source applications for compliance with short term ambient standards, SIP control strategies should be tested using the emission input shown on Table 9–1. When using a refined model, sources should be modeled sequentially with these loads for every hour of the year. To evaluate

[e] Malfunctions which may result in excess emissions are not considered to be a normal operating condition. They generally should not be considered in determining allowable emissions. However, if the excess emissions are the result of poor maintenance, careless operation, or other preventable conditions, it may be necessary to consider them in determining source impact.

SIPs for compliance with quarterly and annual standards, emission input data shown in Table 9–1 should again be used. Emissions from area sources should generally be based on annual average conditions. The source input information in each model user's guide should be carefully consulted and the checklist in Appendix C should also be consulted for other possible emission data that could be helpful. PSD NAAQS compliance demonstrations should follow the emission input data shown in Table 9–2. For purposes of emissions trading, new source review and demonstrations, refer to current EPA policy and guidance to establish input data.

Line source modeling of streets and highways requires data on the width of the roadway and the median strip, the types and amounts of pollutant emissions, the number of lanes, the emissions from each lane and the height of emissions. The location of the ends of the straight roadway segments should be specified by appropriate grid coordinates. Detailed information and data requirements for modeling mobile sources of pollution are provided in the user's manuals for each of the models applicable to mobile sources.

The impact of growth on emissions should be considered in all modeling analyses covering existing sources. Increases in emissions due to planned expansion or planned fuel switches should be identified. Increases in emissions at individual sources that may be associated with a general industrial/commercial/residential expansion in multi-source urban areas should also be treated. For new sources the impact of growth on emissions should generally be considered for the period prior to the start-up date for the source. Such changes in emissions should treat increased area source emissions, changes in existing point source emissions which were not subject to preconstruction review, and emissions due to sources with permits to construct that have not yet started operation.

TABLE 9–1.—MODEL EMISSION INPUT DATA FOR POINT SOURCES [1]

Averaging time	Emission limit (#/MMBtu)[2] ×	Operating level (MMBtu/hr)[2] ×	Operating factor (e.g., hr/yr, hr/day)
Stationary Point Source(s) Subject to SIP Emission Limit(s) Evaluation for Compliance with Ambient Standards (Including Areawide Demonstrations)			
Annual & quarterly	Maximum allowable emission limit or federally enforceable permit limit.	Actual or design capacity (whichever is greater), or federally enforceable permit condition.	Actual operating factor averaged over most recent 2 years.[3]
Short term	Maximum allowable emission limit or federally enforceable permit limit.	Actual or design capacity (whichever is greater), or federally enforceable permit condition [4].	Continuous operation, i.e., all hours of each time period under consideration (for all hours of the meteorological data base).[5]
Nearby Background Source(s)—Same input requirements as for stationary point source(s) above.			
Other Background Source(s)—If modeled (see Section 9.2.3), input data requirements are defined below.			
Annual & quarterly	Maximum allowable emission limit or federally enforceable permit limit.	Annual level when actually operating, averaged over the most recent 2 years [3].	Actual operating factor averaged over the most recent 2 years.[3]
Short term	Maximum allowable emission limit or federally enforceable permit limit.	Annual level when actually operating, averaged over the most recent 2 years [3].	Continuous operation, i.e., all hours of each time period under consideration (for all hours of the meteorological data base).[5]

[1] The model input data requirements shown on this table apply to stationary source control strategies for STATE IMPLEMENTATION PLANS. For purposes of emissions trading, new source review, or prevention of significant deterioration, other model input criteria may apply. Refer to the policy and guidance for these programs to establish the input data.

[2] Terminology applicable to fuel burning sources; analogous terminology (e.g., #/throughput) may be used for other types of sources.

[3] Unless it is determined that this period is not representative.

[4] Operating levels such as 50 percent and 75 percent of capacity should also be modeled to determine the load causing the highest concentration.

[5] If operation does not occur for all hours of the time period of consideration (e.g., 3 or 24 hours) and the source operation is constrained by a federally enforceable permit condition, an appropriate adjustment to the modeled emission rate may be made (e.g., if operation is only 8 a.m. to 4 p.m. each day, only these hours will be modeled with emissions from the source. Modeled emissions should not be averaged across non-operating time periods.)

TABLE 9–2.—POINT SOURCE MODEL INPUT DATA (EMISSIONS) FOR PSD NAAQS COMPLIANCE DEMONSTRATIONS

Averaging time	Emission limit (#/MMBtu)[1] ×	Operating level (MMBtu)[1] ×	Operating factor (e.g., hr/yr, hr/day)
Proposed Major New or Modified Source			
Annual & quarterly	Maximum allowable emission limit or federally enforceable permit limit.	Design capacity or federally enforceable permit condition.	Continuous operation (i.e., 8760 hours).[2]
Short term (≤ 24 hours)	Maximum allowable emission limit or federally enforceable permit limit.	Design capacity or federally enforceable permit condition[3].	Continuous operation (i.e., all hours of each time period under consideration) (for all hours of the meteorological data base).[2]
Nearby Background Source(s)[4]			
Annual & quarterly	Maximum allowable emission limit or federally enforceable permit limit.	Actual or design capacity (whichever is greater), or federally enforceable permit condition.	Actual operating factor averaged over the most recent 2 years.[5 7]
Short term (≤ 24 hours)	Maximum allowable emission limit or federally enforceable permit limit.	Actual or design capacity (whichever is greater), or federally enforceable permit condition[3].	Continuous operation (i.e., all hours of each time period under consideration) (for all hours of the meteorological data base).[2]
Other Background Source(s)[6]			
Annual & quarterly	Maximum allowable emission limit or federally enforceable permit limit.	Annual level when actually operating, averaged over the most recent 2 years[5].	Actual operating factor averaged over the most recent 2 years.[5 7]
Short term (≤ 24 hours)	Maximum allowable emission limit or federally enforceable permit limit.	Annual level when actually operating, averaged over the most recent 2 years[5].	Continuous operation (i.e., all hours of each time period under consideration) (for all hours of the meteorological data base).[2]

[1] Terminology applicable to fuel burning sources; analogous terminology (e.g., #/throughput) may be used for other types of sources.
[2] If operation does not occur for all hours of the time period of consideration (e.g., 3 or 24 hours) and the source operation is constrained by a federally enforceable permit condition, an appropriate adjustment to the modeled emission rate may be made (e.g., if operation is only 8:00 a.m. to 4:00 p.m. each day, only these hours will be modeled with emissions from the source. Modeled emissions should not be averaged across non-operating time periods.
[3] Operating levels such as 50 percent and 75 percent of capacity should also be modeled to determine the load causing the highest concentration.
[4] Includes existing facility to which modification is proposed if the emissions from the existing facility will not be affected by the modification. Otherwise use the same parameters as for major modification.
[5] Unless it is determined that this period is not representative.
[6] Generally, the ambient impacts from non-nearby background sources can be represented by air quality data unless adequate data do not exist.
[7] For those permitted sources not yet in operation or that have not established an appropriate factor, continuous operation (i.e., 8760 hours) should be used.

9.2 Background Concentrations

9.2.1 Discussion

Background concentrations are an essential part of the total air quality concentration to be considered in determining source impacts. Background air quality includes pollutant concentrations due to: (1) Natural sources; (2) nearby sources other than the one(s) currently under consideration; and (3) unidentified sources.

Typically, air quality data should be used to establish background concentrations in the vicinity of the source(s) under consideration. The monitoring network used for background determinations should conform to the same quality assurance and other requirements as those networks established for PSD purposes.[63] An appropriate data validation procedure should be applied to the data prior to use.

If the source is not isolated, it may be necessary to use a multi-source model to establish the impact of nearby sources. Background concentrations should be determined for each critical (concentration) averaging time.

9.2.2 Recommendations (Isolated Single Source)

Two options are available to determine the background concentration near isolated sources.

Option One: Use air quality data collected in the vicinity of the source to determine the background concentration for the averaging times of concern.[f] Determine the mean background concentration at each monitor by excluding values when the source in question is impacting the monitor. The mean annual background is the average of the annual concentrations so determined at each monitor. For shorter averaging periods, the meteorological conditions accompanying the concentrations of concern should be identified. Concentrations for meteorological conditions of concern, at monitors not impacted by the source in question, should be averaged for each separate averaging time to determine the average background value. Monitoring sites inside a 90° sector downwind of the source may be used to determine the area of impact. One hour concentrations may be added and averaged to determine longer averaging periods.

Option Two: If there are no monitors located in the vicinity of the source, a ''regional site'' may be used to determine background. A ''regional site'' is one that is located away from the area of interest but is impacted by similar natural and distant man-made sources.

9.2.3 Recommendations (Multi-Source Areas)

In multi-source areas two components of background should be determined.

Nearby Sources: All sources expected to cause a significant concentration gradient in the vicinity of the source or sources under consideration for emission limit(s) should be explicitly modeled. For evaluation for compliance with the short term and annual ambient standards, the nearby sources should be modeled using the emission input data shown in Table 9–1 or 9–2. The number of such sources is expected to be small except in unusual situations. The nearby source inventory should be determined in consultation with the reviewing authority. It is envisioned that the nearby sources and the sources under consideration will be evaluated together using an appropriate Appendix A model.

The impact of the nearby sources should be examined at locations where interactions between the plume of the point source under consideration and those of nearby sources (plus natural background) can occur. Significant locations include: (1) The area of maximum impact of the point source; (2) the area of maximum impact of nearby sources; and (3) the area where all sources combine to cause maximum impact. These locations may be identified through trial and error analyses.

Other Sources: That portion of the background attributable to all other sources (e.g., natural sources, minor sources and distant major sources) should be determined by the procedures found in section 9.2.2 or by application of a model using Table 9–1 or 9–2.

9.3 Meteorological Input Data

The meteorological data used as input to a dispersion model should be selected on the basis of spatial and climatological (temporal) representativeness as well as the ability of the individual parameters selected to characterize the transport and dispersion conditions in the area of concern. The representativeness of the data is dependent on: (1) The proximity of the meteorological monitoring site to the area under consideration; (2) the complexity of the terrain; (3) the exposure of the meteorological monitoring site; and (4) the period of time during which data are collected. The spatial representativeness of the data can be adversely affected by large distances between the source and receptors of interest and the complex topographic characteristics of the area. Temporal representativeness is a function of the year-to-year variations in weather conditions.

Model input data are normally obtained either from the National Weather Service or as part of an on-site measurement program. Local universities, FAA, military stations, industry and pollution control agencies may also be sources of such data. Some recommendations for the use of each type of data are included in this subsection.

9.3.1 Length of Record of Meteorological Data

9.3.1.1 *Discussion*. The model user should acquire enough meteorological data to ensure that worst-case meteorological conditions are adequately represented in the model results. The trend toward statistically based standards suggests a need for all meteorological conditions to be adequately represented in the data set selected for model input. The number of years of record needed to obtain a stable distribution of conditions depends on the variable being measured and has been estimated by Landsberg and Jacobs[64] for various parameters. Although that study indicates in excess of 10 years may be required to achieve stability in the frequency distributions of some meteorological variables, such long periods are not reasonable for model input data. This is due in part to the fact that hourly data in model input

[f] For purposes of PSD, the location of monitors as well as data quality assurance procedures must satisfy requirements listed in the PSD Monitoring Guidelines.[63]

format are frequently not available for such periods and that hourly calculations of concentration for long periods are prohibitively expensive. A recent study[65] compared various periods from a 17-year data set to determine the minimum number of years of data needed to approximate the concentrations modeled with a 17-year period of meteorological data from one station. This study indicated that the variability of model estimates due to the meteorological data input was adequately reduced if a 5-year period of record of meteorological input was used.

9.3.1.2 *Recommendations.* Five years of representative meteorological data should be used when estimating concentrations with an air quality model. Consecutive years from the most recent, readily available 5-year period are preferred. The meteorological data may be data collected either onsite or at the nearest National Weather Service (NWS) station. If the source is large, e.g., a 500 MW power plant, the use of 5 years of NWS meteorological data or at least 1 year of site-specific data is required.

If one year or more, up to five years, of sitespecific data is available, these data are preferred for use in air quality analyses. Such data should have been subjected to quality assurance procedures as described in Section 9.3.3.2.

For permitted sources whose emission limitations are based on a specific year of meteorological data that year should be added to any longer period being used (e.g., 5 years of NWS data) when modeling the facility at a later time.

9.3.2 National Weather Service Data

9.3.2.1 *Discussion*. The National Weather Service (NWS) meteorological data are routinely available and familiar to most model users. Although the NWS does not provide direct measurements of all the needed dispersion model input variables, methods have been developed and successfully used to translate the basic NWS data to the needed model input. Direct measurements of model input parameters have been made for limited model studies and those methods and techniques are becoming more widely applied; however, most model applications still rely heavily on the NWS data.

There are two standard formats of the NWS data for use in air quality models. The short term models use the standard hourly weather observations available from the National Climatic Data Center (NCDC). These observations are then ''preprocessed'' before they can be used in the models. ''STAR'' summaries are available from NCDC for long term model use. These are joint frequency distributions of wind speed, direction and P–G stability category. They are used as direct input to models such as the long term version of ISC.[58]

9.3.2.2 *Recommendations.* The preferred short term models listed in appendix A all accept as input the NWS meteorological data preprocessed into model compatible form. Long-term (monthly seasonal or annual) preferred models use NWS ''STAR'' summaries. Summarized concentration estimates from the short term models may also be used to develop long-term averages; however, concentration estimates based on the two separate input data sets may not necessarily agree.

Although most NWS measurements are made at a standard height of 10 meters, the actual anemometer height should be used as input to the preferred model.

National Weather Service wind directions are reported to the nearest 10 degrees. A specific set of randomly generated numbers has been developed for use with the preferred EPA models and should be used to ensure a lack of bias in wind direction assignments within the models.

Data from universities, FAA, military stations, industry and pollution control agencies may be used if such data are equivalent in accuracy and detail to the NWS data.

9.3.3 Site-Specific Data

9.3.3.1 *Discussion*. Spatial or geographical representativeness is best achieved by collection of all of the needed model input data at the actual site of the source(s). Site-specific measured data are therefore preferred as model input, provided appropriate instrumentation and quality assurance procedures are followed and that the data collected are representative (free from undue local or ''micro'' influences) and compatible with the input requirements of the model to be used. However, direct measurements of all the needed model input parameters may not be possible. This section discusses suggestions for the collection and use of on-site data. Since the methods outlined in this section are still being tested, comparison of the model parameters derived using these site-specific data should be compared at least on a spot-check basis, with parameters derived from more conventional observations.

9.3.3.2 *Recommendations.*

a. *Site-specific Data Collection*. The document ''On-Site Meteorological Program Guidance for Regulatory Modeling Applications''[66] provides recommendations on the collection and use of on-site meteorological data. Recommendations on characteristics, siting, and exposure of meteorological instruments and on data recording, processing, completeness requirements, reporting, and archiving are also included. This publication should be used as a supplement to the limited guidance on these subjects now found in the ''Ambient Monitoring Guidelines for Prevention of Significant Deterioration''.[63] Detailed information on quality assurance is

provided in the ''Quality Assurance Handbook for Air Pollution Measurement Systems: Volume IV''.[67] As a minimum, site-specific measurements of ambient air temperature, transport wind speed and direction, and the parameters to determine Pasquill-Gifford (P–G) stability categories should be available in meteorological data sets to be used in modeling. Care should be taken to ensure that meteorological instruments are located to provide representative characterization of pollutant transport between sources and receptors of interest. The Regional Office will determine the appropriateness of the measurement locations.

b. All site-specific data should be reduced to hourly averages. Table 9–3 lists the wind related parameters and the averaging time requirements.

c. *Solar Radiation Measurements.* Total solar radiation should be measured with a reliable pyranometer, sited and operated in accordance with established on-site meteorological guidance.[66]

d. *Temperature Measurements.* Temperature measurements should be made at standard shelter height (2m) in accordance with established on-site meteorological guidance.[66]

e. *Temperature Difference Measurements.* Temperature difference (ΔT) measurements for use in estimating P–G stability categories using the SRDT methodology (see Stability Categories) should be obtained using two matched thermometers or a reliable thermocouple system to achieve adequate accuracy.

f. Siting, probe placement, and operation of ΔT systems should be based on guidance found in Chapter 3 of reference 66, and such guidance should be followed when obtaining vertical temperature gradient data for use in plume rise estimates or in determining the critical dividing streamline height.

g. *Wind Measurements.* For refined modeling applications in simple terrain situations, if a source has a stack below 100m, select the stack top height as the wind measurement height for characterization of plume dilution and transport. For sources with stacks extending above 100m, a 100m tower is suggested unless the stack top is significantly above 100m (i.e., ≥200m). In cases with stack tops ≥200m, remote sensing may be a feasible alternative. In some cases, collection of stack top wind speed may be impractical or incompatible with the input requirements of the model to be used. In such cases, the Regional Office should be consulted to determine the appropriate measurement height.

h. For refined modeling applications in complex terrain, multiple level (typically three or more) measurements of wind speed and direction, temperature and turbulence (wind fluctuation statistics) are required. Such measurements should be obtained up to the representative plume height(s) of interest (i.e., the plume height(s) under those conditions important to the determination of the design concentration). The representative plume height(s) of interest should be determined using an appropriate complex terrain screening procedure (e.g., CTSCREEN) and should be documented in the monitoring/modeling protocol. The necessary meteorological measurements should be obtained from an appropriately sited meteorological tower augmented by SODAR if the representative plume height(s) of interest exceed 100m. The meteorological tower need not exceed the lesser of the representative plume height of interest (the highest plume height if there is more than one plume height of interest) or 100m.

i. In general, the wind speed used in determining plume height is defined as the wind speed at stack top.

j. Specifications for wind measuring instruments and systems are contained in the ''On-Site Meteorological Program Guidance for Regulatory Modeling Applications''.[66]

k. *Stability Categories.* The P–G stability categories, as originally defined, couple near-surface measurements of wind speed with subjectively determined insolation assessments based on hourly cloud cover and ceiling height observations. The wind speed measurements are made at or near 10m. The insolation rate is typically assessed using observations of cloud cover and ceiling height based on criteria outlined by Turner.[50] It is recommended that the P–G stability category be estimated using the Turner method with site-specific wind speed measured at or near 10m and representative cloud cover and ceiling height. Implementation of the Turner method, as well as considerations in determining representativeness of cloud cover and ceiling height in cases for which site-specific cloud observations are unavailable, may be found in section 6 of reference 66. In the absence of requisite data to implement the Turner method, the SRDT method or wind fluctuation statistics (i.e., the σ_E and σ_A methods) may be used.

l. The SRDT method, described in section 6.4.4.2 of reference 66, is modified slightly from that published by Bowen et al. (1983)[136] and has been evaluated with three on-site data bases.[137] The two methods of stability classification which use wind fluctuation statistics, the σ_E and σ_A methods, are also described in detail in section 6.4.4 of reference 66 (note applicable tables in section 6). For additional information on the wind fluctuation methods, see references 68–72.

m. Hours in the record having missing data should be treated according to an established data substitution protocol and after valid data retrieval requirements have been met. Such protocols are usually part of the approved monitoring program plan. Data substitution guidance is provided in section 5.3 of reference 66.

n. *Meteorological Data Processors.* The following meteorological preprocessors are recommended by EPA: RAMMET, PCRAMMET, STAR, PCSTAR, MPRM,[135] and METPRO.[24] RAMMET is the recommended meteorological preprocessor for use in applications employing hourly NWS data. The RAMMET format is the standard data input format used in sequential Gaussian models recommended by EPA. PCRAMMET[138] is the PC equivalent of the mainframe version (RAMMET). STAR is the recommended preprocessor for use in applications employing joint frequency distributions (wind direction and wind speed by stability class) based on NWS data. PCSTAR is the PC equivalent of the mainframe version (STAR). MPRM is the recommended preprocessor for use in applications employing on-site meteorological data. The latest version (MPRM 1.3) has been configured to implement the SRDT method for estimating P–G stability categories. MPRM is a general purpose meteorological data preprocessor which supports regulatory models requiring RAMMET formatted data and STAR formatted data. In addition to on-site data, MPRM provides equivalent processing of NWS data. METPRO is the required meteorological data preprocessor for use with CTDMPLUS. All of the above mentioned data preprocessors are available for downloading from the SCRAM BBS.[19]

TABLE 9–3.—AVERAGING TIMES FOR SITE-SPECIFIC WIND AND TURBULENCE MEASUREMENTS

Parameter	Averaging time
Surface wind speed (for use in stability determinations).	1-hr.
Transport direction	1-hr.
Dilution wind speed	1-hr.
Turbulence measurements (σ_E and σ_A) for use in stability determinations.	1-hr.[1]

[1] To minimize meander effects in σ_A when wind conditions are light and/or variable, determine the hourly average σ value from four sequential 15-minute σ's according to the following formula:

$$\sigma_{1-\mathrm{hr}} = \sqrt{\frac{\sigma_{15}{}^2 + \sigma_{15}{}^2 + \sigma_{15}{}^2 + \sigma_{15}{}^2}{4}}$$

9.3.4 Treatment of Calms

9.3.4.1 *Discussion.* Treatment of calm or light and variable wind poses a special problem in model applications since Gaussian models assume that concentration is inversely proportional to wind speed. Furthermore, concentrations become unrealistically large when wind speeds less than 1 m/s are input to the model. A procedure has been developed for use with NWS data to prevent the occurrence of overly conservative concentration estimates during periods of calms. This procedure acknowledges that a Gaussian plume model does not apply during calm conditions and that our knowledge of plume behavior and wind patterns during these conditions does not, at present, permit the development of a better technique. Therefore, the procedure disregards hours which are identified as calm. The hour is treated as missing and a convention for handling missing hours is recommended.

Preprocessed meteorological data input to most appendix A EPA models substitute a 1.00 m/s wind speed and the previous direction for the calm hour. The new treatment of calms in those models attempts to identify the original calm cases by checking for a 1.00 m/s wind speed coincident with a wind direction equal to the previous hour's wind direction. Such cases are then treated in a prescribed manner when estimating short term concentrations.

9.3.4.2 *Recommendations.* Hourly concentrations calculated with Gaussian models using calms should not be considered valid; the wind and concentration estimates for these hours should be disregarded and considered to be missing. Critical concentrations for 3-, 8-, and 24-hour averages should be calculated by dividing the sum of the hourly concentration for the period by the number of valid or nonmissing hours. If the total number of valid hours is less than 18 for 24-hour averages, less than 6 for 8-hour averages or less than 3 for 3-hour averages, the total concentration should be divided by 18 for the 24-hour average, 6 for the 8-hour average and 3 for the 3-hour average. For annual averages, the sum of all valid hourly concentrations is divided by the number of non-calm hours during the year. A post-processor computer program, CALMPRO[73] has been prepared following these instructions and has been hardwired in the following models: RAM, ISC, MPTER and CRSTER.

The recommendations above apply to the use of calms for short term averages and do not apply to the determination of long term averages using ''STAR'' data summaries. Calms should continue to be included in the preparation of ''STAR'' summaries. A treatment for calms and very light winds is built into the software that produces the ''STAR'' summaries.

Stagnant conditions, including extended periods of calms, often produce high concentrations over wide areas for relatively long averaging periods. The standard short term Gaussian models are often not applicable to such situations. When stagnation conditions are of concern, other modeling techniques should be considered on a case-by-case basis. (See also section 8.2.10)

When used in Gaussian models, measured on-site wind speeds of less than 1 m/s but higher than the response threshold of the instrument should be input as 1m/s; the corresponding wind direction should also be input. Observations below the response threshold of the instrument are also set to 1 m/s but the wind direction from the previous hour is used. If the wind speed or direction can not be determined, that hour should be treated as missing and short term averages should then be calculated as above.

10.0 Accuracy and Uncertainty of Models

10.1 Discussion

Increasing reliance has been placed on concentration estimates from models as the primary basis for regulatory decisions concerning source permits and emission control requirements. In many situations, such as review of a proposed source, no practical alternative exists. Therefore, there is an obvious need to know how accurate models really are and how any uncertainty in the estimates affects regulatory decisions. EPA recognizes the need for incorporating such information and has sponsored workshops[11,74] on model accuracy, the possible ways to quantify accuracy, and on considerations in the incorporation of model accuracy and uncertainty in the regulatory process. The Second (EPA) Conference on Air Quality Modeling, August 1982,[75] was devoted to that subject.

10.1.1 Overview of Model Uncertainty

Dispersion models generally attempt to estimate concentrations at specific sites that really represent an ensemble average of numerous repetitions of the same event. The event is characterized by measured or ''known'' conditions that are input to the models, e.g., wind speed, mixed layer height, surface heat flux, emission characteristics, etc. However, in addition to the known conditions, there are unmeasured or unknown variations in the conditions of this event, e.g., unresolved details of the atmospheric flow such as the turbulent velocity field. These unknown conditions, may vary among repetitions of the event. As a result, deviations in observed concentrations from their ensemble average, and from the concentrations estimated by the model, are likely to occur even though the known conditions are fixed. Even with a perfect model that predicts the correct ensemble average, there are likely to be deviations from the observed concentrations in individual repetitions of the event, due to variations in the unknown conditions. The statistics of these concentration residuals are termed ''inherent'' uncertainty. Available evidence suggests that this source of uncertainty alone may be responsible for a typical range of variation in concentrations of as much as ±50 percent.[76]

Moreover, there is ''reducible'' uncertainty[77] associated with the model and its input conditions; neither models nor data bases are perfect. Reducible uncertainties are caused by: (1) Uncertainties in the input values of the known conditions—emission characteristics and meteorological data; (2) errors in the measured concentrations which are used to compute the concentration residuals; and (3) inadequate model physics and formulation. The ''reducible'' uncertainties can be minimized through better (more accurate and more representative) measurements and better model physics.

To use the terminology correctly, reference to model accuracy should be limited to that portion of reducible uncertainty which deals with the physics and the formulation of the model. The accuracy of the model is normally determined by an evaluation procedure which involves the comparison of model concentration estimates with measured air quality data.[78] The statement of accuracy is based on statistical tests or performance measures such as bias, noise, correlation, etc.[11] However, information that allows a distinction between contributions of the various elements of inherent and reducible uncertainty is only now beginning to emerge. As a result most discussions of the accuracy of models make no quantitative distinction between (1) limitations of the model versus (2) limitations of the data base and of knowledge concerning atmospheric variability. The reader should be aware that statements on model accuracy and uncertainty may imply the need for improvements in model performance that even the ''perfect'' model could not satisfy.

10.1.2 Studies of Model Accuracy

A number of studies[79,80] have been conducted to examine model accuracy, particularly with respect to the reliability of short-term concentrations required for ambient standard and increment evaluations. The results of these studies are not surprising. Basically, they confirm what leading atmospheric scientists have said for some time: (1) Models are more reliable for estimating longer time-averaged concentrations than for estimating short-term concentrations at specific locations; and (2) the models are reasonably reliable in estimating the magnitude

of highest concentrations occurring sometime, somewhere within an area. For example, errors in highest estimated concentrations of ± 10 to 40 percent are found to be typical,[81] i.e., certainly well within the often quoted factor-of-two accuracy that has long been recognized for these models. However, estimates of concentrations that occur at a specific time and site, are poorly correlated with actually observed concentrations and are much less reliable.

As noted above, poor correlations between paired concentrations at fixed stations may be due to ''reducible'' uncertainties in knowledge of the precise plume location and to unquantified inherent uncertainties. For example, Pasquill[82] estimates that, apart from data input errors, maximum ground-level concentrations at a given hour for a point source in flat terrain could be in error by 50 percent due to these uncertainties. Uncertainty of five to 10 degrees in the measured wind direction, which transports the plume, can result in concentration errors of 20 to 70 percent for a particular time and location, depending on stability and station location. Such uncertainties do not indicate that an estimated concentration does not occur, only that the precise time and locations are in doubt.

10.1.3 Use of Uncertainty in Decision-Making

The accuracy of model estimates varies with the model used, the type of application, and site-specific characteristics. Thus, it is desirable to quantify the accuracy or uncertainty associated with concentration estimates used in decision-making. Communications between modelers and decision-makers must be fostered and further developed. Communications concerning concentration estimates currently exist in most cases, but the communications dealing with the accuracy of models and its meaning to the decision-maker are limited by the lack of a technical basis for quantifying and directly including uncertainty in decisions. Procedures for quantifying and interpreting uncertainty in the practical application of such concepts are only beginning to evolve; much study is still required.[74,75,77]

In all applications of models an effort is encouraged to identify the reliability of the model estimates for that particular area and to determine the magnitude and sources of error associated with the use of the model. The analyst is responsible for recognizing and quantifying limitations in the accuracy, precision and sensitivity of the procedure. Information that might be useful to the decision-maker in recognizing the seriousness of potential air quality violations includes such model accuracy estimates as accuracy of peak predictions, bias, noise, correlation, frequency distribution, spatial extent of high concentration, etc. Both space/time pairing of estimates and measurements and unpaired comparisons are recommended. Emphasis should be on the highest concentrations and the averaging times of the standards or increments of concern. Where possible, confidence intervals about the statistical values should be provided. However, while such information can be provided by the modeler to the decision-maker, it is unclear how this information should be used to make an air pollution control decision. Given a range of possible outcomes, it is easiest and tends to ensure consistency if the decision-maker confines his judgment to use of the ''best estimate'' provided by the modeler (i.e., the design concentration estimated by a model recommended in this guideline or an alternate model of known accuracy). This is an indication of the practical limitations imposed by current abilities of the technical community.

To improve the basis for decision-making, EPA has developed and is continuing to study procedures for determining the accuracy of models, quantifying the uncertainty, and expressing confidence levels in decisions that are made concerning emissions controls.[83,84] However, work in this area involves ''breaking new ground'' with slow and sporadic progress likely. As a result, it may be necessary to continue using the ''best estimate'' until sufficient technical progress has been made to meaningfully implement such concepts dealing with uncertainty.

10.1.4 Evaluation of Models

A number of actions are being taken to ensure that the best model is used correctly for each regulatory application and that a model is not arbitrarily imposed. First, this guideline clearly recommends the most appropriate model be used in each case. Preferred models, based on a number of factors, are identified for many uses. General guidance on using alternatives to the preferred models is also provided. Second, all the models in eight categories (i.e., rural, urban, industrial complex, reactive pollutants, mobile source, complex terrain, visibility and long range transport) that are candidates for inclusion in this guideline are being subjected to a systematic performance evaluation and a peer scientific review.[85] The same data bases are being used to evaluate all models within each of eight categories. Statistical performance measures, including measures of difference (or residuals) such as bias, variance of difference and gross variability of the difference, and measures of correlation such as time, space, and time and space combined as recommended by the AMS Woods Hole Workshop,[11] are being followed. The results of the scientific review are being incorporated in this guideline and will be the basis for future

revision.[12, 13] Third, more specific information has been provided for justifying the site specific use of alternative models in the documents ''Interim Procedures for Evaluating Air Quality Models'',[15] and the ''Protocol for Determining the Best Performing Model''.[17] Together these documents provide methods that allow a judgment to be made as to what models are most appropriate for a specific application. For the present, performance and the theoretical evaluation of models are being used as an indirect means to quantify one element of uncertainty in air pollution regulatory decisions.

In addition to performance evaluation of models, sensitivity analyses are encouraged since they can provide additional information on the effect of inaccuracies in the data bases and on the uncertainty in model estimates. Sensitivity analyses can aid in determining the effect of inaccuracies of variations or uncertainties in the data bases on the range of likely concentrations. Such information may be used to determine source impact and to evaluate control strategies. Where possible, information from such sensitivity analyses should be made available to the decision-maker with an appropriate interpretation of the effect on the critical concentrations.

10.2 Recommendations

No specific guidance on the consideration of model uncertainty in decision-making is being given at this time. There is incomplete technical information on measures of model uncertainty that are most relevant to the decision-maker. It is not clear how a decisionmaker could use such information, particularly given limitations of the Clean Air Act. As procedures for considering uncertainty develop and become implementable, this guidance will be changed and expanded. For the present, continued use of the ''best estimate'' is acceptable and is consistent with CAA requirements.

11.0 Regulatory Application of Models

11.1 Discussion

Procedures with respect to the review and analysis of air quality modeling and data analyses in support of SIP revisions, PSD permitting or other regulatory requirements need a certain amount of standardization to ensure consistency in the depth and comprehensiveness of both the review and the analysis itself. This section recommends procedures that permit some degree of standardization while at the same time allowing the flexibility needed to assure the technically best analysis for each regulatory application.

Dispersion model estimates, especially with the support of measured air quality data, are the preferred basis for air quality demonstrations. Nevertheless, there are instances where the performance of recommended dispersion modeling techniques, by comparison with observed air quality data, may be shown to be less than acceptable. Also, there may be no recommended modeling procedure suitable for the situation. In these instances, emission limitations may be established solely on the basis of observed air quality data as would be applied to a modeling analysis. The same care should be given to the analyses of the air quality data as would be applied to a modeling analysis.

The current NAAQS for SO_2 and CO are both stated in terms of a concentration not to be exceeded more than once a year. There is only an annual standard for NO_2 and a quarterly standard for Pb. The PM–10 and ozone standards permit the exceedance of a concentration on an average of not mornvention is to average over a 3-year period.[5, 86, 103] This represents a change from a deterministic to a more statistical form of the standard and permits some consideration to be given to unusual circumstances. The NAAQS are subjected to extensive review and possible revision every 5 years.

This section discusses general requirements for concentration estimates and identifies the relationship to emission limits. The following recommendations apply to: (1) Revisions of State Implementation Plans; (2) the review of new sources and the prevention of significant deterioration (PSD); and (3) analyses of the emissions trades (''bubbles'').

11.2 *Recommendations*

11.2.1 Analysis Requirements

Every effort should be made by the Regional Office to meet with all parties involved in either a SIP revision or a PSD permit application prior to the start of any work on such a project. During this meeting, a protocol should be established between the preparing and reviewing parties to define the procedures to be followed, the data to be collected, the model to be used, and the analysis of the source and concentration data. An example of requirements for such an effort is contained in the Air Quality Analysis Checklist included here as Appendix C. This checklist suggests the level of detail required to assess the air quality resulting from the proposed action. Special cases may require additional data collection or analysis and this should be determined and agreed upon at this preapplication meeting. The protocol should be written and agreed upon by the parties concerned, although a formal legal document is not intended. Changes in such a protocol are often required as the data collection and analysis progresses. However, the protocol establishes a common understanding of the requirements.

An air quality analysis should begin with a screening model to determine the potential

of the proposed source or control strategy to violate the PSD increment or NAAQS. It is recommended that the screening techniques found in ''Screening Procedures for Estimating the Air Quality Impact of Stationary Sources''[18] be used for point source analyses. Screening procedures for area source analysis are discussed in ''Applying Atmospheric Simulation Models to Air Quality Maintenance Areas''.[87] For mobile source impact assessments the ''Guideline for Modeling Carbon Monoxide from Roadway Intersections''[34] is available.

If the concentration estimates from screening techniques indicate that the PSD increment or NAAQS may be approached or exceeded, then a more refined modeling analysis is appropriate and the model user should select a model according to recommendations in sections 4–8. In some instances, no refined technique may be specified in this guide for the situation. The model user is then encouraged to submit a model developed specifically for the case at hand. If that is not possible, a screening technique may supply the needed results.

Regional Offices should require permit applicants to incorporate the pollutant contributions of all sources into their analysis. Where necessary this may include emissions associated with growth in the area of impact of the new or modified source's impact. PSD air quality assessments should consider the amount of the allowable air quality increment that has already been granted to any other sources. Therefore, the most recent source applicant should model the existing or permitted sources in addition to the one currently under consideration. This would permit the use of newly acquired data or improved modeling techniques if such have become available since the last source was permitted. When remodeling, the worst case used in the previous modeling analysis should be one set of conditions modeled in the new analysis. All sources should be modeled for each set of meteorological conditions selected and for all receptor sites used in the previous applications as well as new sites specific to the new source.

11.2.2 Use of Measured Data in Lieu of Model Estimates

Modeling is the preferred method for determining emission limitations for both new and existing sources. When a preferred model is available, model results alone (including background) are sufficient. Monitoring will normally not be accepted as the sole basis for emission limitation determination in flat terrain areas. In some instances when the modeling technique available is only a screening technique, the addition of air quality data to the analysis may lend credence to model results.

There are circumstances where there is no applicable model, and measured data may need to be used. Examples of such situations are: (1) Complex terrain locations; (2) land/water interface areas; and (3) urban locations with a large fraction of particulate emissions from nontraditional sources. However, only in the case of an existing source should monitoring data alone be a basis for emission limits. In addition, the following items should be considered prior to the acceptance of the measured data:

a. Does a monitoring network exist for the pollutants and averaging times of concern;

b. Has the monitoring network been designed to locate points of maximum concentration;

c. Do the monitoring network and the data reduction and storage procedures meet EPA monitoring and quality assurance requirements;

d. Do the data set and the analysis allow impact of the most important individual sources to be identified if more than one source or emission point is involved;

e. Is at least one full year of valid ambient data available; and

f. Can it be demonstrated through the comparison of monitored data with model results that available models are not applicable?

The number of monitors required is a function of the problem being considered. The source configuration, terrain configuration, and meteorological variations all have an impact on number and placement of monitors. Decisions can only be made on a case-by-case basis. The Interim Procedures for Evaluating Air Quality Models[15] should be used in establishing criteria for demonstrating that a model is not applicable.

Sources should obtain approval from the Regional Office or reviewing authority for the monitoring network prior to the start of monitoring. A monitoring protocol agreed to by all concerned parties is highly desirable. The design of the network, the number, type and location of the monitors, the sampling period, averaging time as well as the need for meteorological monitoring or the use of mobile sampling or plume tracking techniques, should all be specified in the protocol and agreed upon prior to start-up of the network.

11.2.3 Emission Limits

11.2.3.1 *Design Concentrations.* Emission limits should be based on concentration estimates for the averaging time that results in the most stringent control requirements. The concentration used in specifying emission limits is called the design value or design concentration and is a sum of the concentration contributed by the source and the background concentration.

To determine the averaging time for the design value, the most restrictive National Ambient Air Quality Standard (NAAQS) should be identified by calculating, for each averaging time, the ratio of the applicable

NAAQS (S) minus background (B) to the predicted concentration (P) (i.e., (S–B)/P). The averaging time with the lowest ratio identifies the most restrictive standard. If the annual average is the most restrictive, the highest estimated annual average concentration from one or a number of years of data is the design value. When short term standards are most restrictive, it may be necessary to consider a broader range of concentrations than the highest value. For example, for pollutants such as SO_2, the highest, second-highest concentration is the design value. For pollutants with statistically based NAAQS, the design value is found by determining the more restrictive of: (1) The short-term concentration that is not expected to be exceeded more than once per year over the period specified in the standard, or (2) the long-term concentration that is not expected to exceed the long-term NAAQS. Determination of design values for PM–10 is presented in more detail in the ''PM–10 SIP Development Guideline''.[103]

When the highest, second-highest concentration is used in assessing potential violations of a short term NAAQS, criteria that are identified in ''Guideline for Interpretation of Air Quality Standards''[88] should be followed. This guideline specifies that a violation of a short term standard occurs at a site when the standard is exceeded a second time. Thus, emission limits that protect standards for averaging times of 24 hours or less are appropriately based on the highest, second-highest estimated concentration plus a background concentration which can reasonably be assumed to occur with the concentration.

11.2.3.2 *NAAQS Analyses for New or Modified Sources.* For new or modified sources predicted to have a significant ambient impact[63] and to be located in areas designated attainment or unclassifiable for the SO_2, Pb, NO_2, or CO NAAQS, the demonstration as to whether the source will cause or contribute to an air quality violation should be based on: (1) The highest estimated annual average concentration determined from annual averages of individual years; or (2) the highest, second-highest estimated concentration for averaging times of 24-hours or less; and (3) the significance of the spatial and temporal contribution to any modeled violation. For Pb, the highest estimated concentration based on an individual calendar quarter averaging period should be used. Background concentrations should be added to the estimated impact of the source. The most restrictive standard should be used in all cases to assess the threat of an air quality violation. For new or modified sources predicted to have a significant ambient impact[63] in areas designated attainment or unclassifiable for the PM–10 NAAQS, the demonstration of whether or not the source will cause or contribute to an air quality violation should be based on sufficient data to show whether: (1) The projected 24-hour average concentrations will exceed the 24-hour NAAQS more than once per year, on average; (2) the expected (i.e., average) annual mean concentration will exceed the annual NAAQS; and (3) the source contributes significantly, in a temporal and spatial sense, to any modeled violation.

11.2.3.3 *PSD Air Quality Increments and Impacts.* The allowable PSD increments for criteria pollutants are established by regulation and cited in 40 CFR 51.166. These maximum allowable increases in pollutant concentrations may be exceeded once per year at each site, except for the annual increment that may not be exceeded. The highest, second-highest increase in estimated concentrations for the short term averages as determined by a model should be less than or equal to the permitted increment. The modeled annual averages should not exceed the increment.

Screening techniques defined in sections 4 and 5 can sometimes be used to estimate short term incremental concentrations for the first new source that triggers the baseline in a given area. However, when multiple increment-consuming sources are involved in the calculation, the use of a refined model with at least 1 year of on-site or 5 years of off-site NWS data is normally required. In such cases, sequential modeling must demonstrate that the allowable increments are not exceeded temporally and spatially, i.e., for all receptors for each time period throughout the year(s) (time period means the appropriate PSD averaging time, e.g., 3-hour, 24-hour, etc.).

The PSD regulations require an estimation of the SO_2, particulate matter, and NO_2 impact on any Class I area. Normally, Gaussian models should not be applied at distances greater than can be accommodated by the steady state assumptions inherent in such models. The maximum distance for refined Gaussian model application for regulatory purposes is generally considered to be 50km. Beyond the 50km range, screening techniques may be used to determine if more refined modeling is needed. If refined models are needed, long range transport models should be considered in accordance with section 7.2.6. As previously noted in sections 3 and 7, the need to involve the Federal Land Manager in decisions on potential air quality impacts, particularly in relation to PSD Class I areas, cannot be overemphasized.

11.2.3.4 *Emissions Trading Policy (Bubbles).* EPA's final Emissions Trading Policy, commonly referred to as the ''bubble policy,'' was published in the FEDERAL REGISTER in 1986.[89] Principles contained in the policy should be used to evaluate ambient impacts of emission trading activities.

Emission increases and decreases within the bubble should result in ambient air quality equivalence. Two levels of analysis are defined for establishing this equivalence. In a Level I analysis the source configuration and setting must meet certain limitations (defined in the policy) that ensure ambient equivalence; no modeling is required. In a Level II analysis a modeling demonstration of ambient equivalence is required but only the sources involved in the emissions trade are modeled. The resulting ambient estimates of net increases/decreases are compared to a set of significance levels to determine if the bubble can be approved. A Level II analysis requires the use of a refined model and the most recent readily available full year of representative meteorological data. Sequential modeling must demonstrate that the significance levels are met temporally and spatially, i.e., for all receptors for each time period throughout the year (time period means the appropriate NAAQS averaging time, e.g., 3-hour, 24-hour, etc.).

For those bubbles that cannot meet the Level I or Level II requirements, the Emissions Trading Policy allows for a Level III analysis. A Level III analysis, from a modeling standpoint, is generally equivalent to the requirements for a standard SIP revision where all sources (and background) are considered and the estimates are compared to the NAAQS as in section 11.2.3.2.

The Emissions Trading Policy allows States to adopt generic regulations for processing bubbles. The modeling procedures recommended in this guideline apply to such generic regulations. However, an added requirement is that the modeling procedures contained in any generic regulation must be replicable such that there is no doubt as to how each individual bubble will be modeled. In general this means that the models, the data bases and the procedures for applying the model must be defined in the regulation. The consequences of the replicability requirement are that bubbles for sources located in complex terrain and certain industrial sources where judgments must be made on source characterization cannot be handled generically.

12.0 REFERENCES[g,h]

1. Code of Federal Regulations (Title 40, Part 51): Protection of the Environment; Requirements for Preparation, Adoption, and Submittal of Implementation Plans.

2. Environmental Protection Agency, 1977. Guidelines for the Regional Evaluation of State and Local New Source Review Program. EPA Publication No. EPA–450/2–77–027. U.S. Environmental Protection Agency, Research Triangle Park, NC. (NTIS No. PB–275053)

3. Environmental Protection Agency, 1980. Prevention of Significant Deterioration Workshop Manual. EPA Publication No. EPA–450/2–80–081. U.S. Environmental Protection Agency, Research Triangle Park, NC. (NTIS No. PB 81–136459)

4. Environmental Protection Agency, 1981. Guideline for Fluid Modeling of Atmospheric Diffusion. EPA Publication No. EPA–600/8–81–009. U.S. Environmental Protection Agency, Research Triangle Park, NC. (NTIS No. PB 81–201410)

5. Code of Federal Regulations (Title 40, part 50): Protection of the Environment; National Primary and Secondary Ambient Air Quality Standards.

6. Environmental Protection Agency, 1988. Model Clearinghouse: Operational Plan (Revised). Staff Report. U.S. Environmental Protection Agency, Research Triangle Park, NC. (Docket No. A–88–04, II–J–1)

7. Environmental Protection Agency, 1980. Guidelines on Air Quality Models. FEDERAL REGISTER, 45(61): 20157–20158.

8. Londergan, R.J., D.H. Minott, D.J. Wackter, T. Kincaid and D. Bonitata, 1982. Evaluation of Rural Air Quality Simulation Models. EPA Publication No. EPA–450/4–82–020. U.S. Environmental Protection Agency, Research Triangle Park, NC. (NTIS No. PB 83–182758)

9. Londergan, R.J., D.H. Minott, D.J. Wackter and R.R. Fizz, 1983. Evaluation of Urban Air Quality Simulation Models. EPA Publication No. EPA–450/4–83–020. U.S. Environmental Protection Agency, Research Triangle Park, NC. (NTIS No. PB 84–241173).

10. Londergan, R.J. and D.J. Wackter, 1984. Evaluation of Complex Terrain Air Quality Simulation Models. EPA Publication No. EPA–450/4–84–017. U.S. Environmental Protection Agency, Research Triangle Park, NC. (NTIS No. PB 85–119485).

11. Fox, D.G., 1981. Judging Air Quality Model Performance. Bulletin of the American Meteorological Society, 62(5): 599–609.

12. American Meteorological Society, 1983. Synthesis of the Rural Model Reviews. EPA Publication No. EPA–600/3–83–108. U.S. Environmental Protection Agency, Research Triangle Park, NC. (NTIS No. PB 84–121037)

13. American Meteorological Society, 1984. Review of the Attributes and Performance of

[g] Documents not available in the open literature or from the National Technical Information Service (NTIS) have been placed in Docket No. A–80–46 or A–88–04. Item Numbers for documents placed in the Docket are shown at the end of the reference.

[h] Some EPA references, e.g., model user's guides, etc., are periodically revised. Users are referred to the SCRAM BBS[19] to download updates or addenda; see Appendix A of this appendix, ''A.O INTRODUCTION AND AVAILABILITY''.

Six Urban Diffusion Models. EPA Publication No. EPA–600/S3–84–089. U.S. Environmental Protection Agency, Research Triangle Park, NC. (NTIS No. PB 84–236850)

14. White, F.D. (Ed.), J.K.S. Ching, R.L. Dennis and W.H. Snyder, 1985. Summary of Complex Terrain Model Evaluation. EPA Publication No. EPA–600/3–85–060. U.S. Environmental Protection Agency, Research Triangle Park, NC. (NTIS No. PB 85–236891)

15. Environmental Protection Agency, 1984. Interim Procedures for Evaluating Air Quality Models (Revised). EPA Publication No. EPA–450/4–84–023. U.S. Environmental Protection Agency, Research Triangle Park, NC. (NTIS No. PB 85–106060)

16. Environmental Protection Agency, 1985. Interim Procedures for Evaluating Air Quality Models: Experience with Implementation. EPA Publication No. EPA–450/4–85–006. U.S. Environmental Protection Agency, Research Triangle Park, NC. (NTIS No. PB 85–242477)

17. Environmental Protection Agency, 1992. Protocol for Determining the Best Performing Model. EPA Publication No. EPA–454/R–92–025. U.S. Environmental Protection Agency, Research Triangle Park, NC.

18. Environmental Protection Agency, 1992. Screening Procedures for Estimating the Air Quality Impact of Stationary Sources, Revised. EPA Publication No. EPA–454/R–92–019. U.S. Environmental Protection Agency, Research Triangle Park, NC.

19. Environmental Protection Agency, 1989. Support Center for Regulatory Air Models Bulletin Board System (SCRAM BBS). Source Receptor Analysis Branch, Research Triangle Park, NC. (Docket Nos. A–88–04, II–J–4a and b)

20. Environmental Protection Agency, 1995. SCREEN3 User's Guide. EPA Publication No. EPA–454/B–95–004. U.S. Environmental Protection Agency, Research Triangle Park, NC. (NTIS No. PB 95–222766)

21. Environmental Protection Agency, 1987. EPA Complex Terrain Model Development: Final Report. EPA Publication No. EPA–600/3–88–006. U.S. Environmental Protection Agency, Research Triangle Park, NC. (NTIS No. PB 88–162110)

22. Perry, S.G., D.J. Burns, L.H. Adams, R.J. Paine, M.G. Dennis, M.T. Mills, D.J. Strimaitis, R.J. Yamartino and E.M. Insley, 1989. User's Guide to the Complex Terrain Dispersion Model Plus Algorithms for Unstable Situations (CTDMPLUS) Volume 1; Model Description and User Instructions. EPA Publication No. EPA–600/8–89–041. U.S. Environmental Protection Agency, Research Triangle Park, NC. (NTIS No. PB 89–181424)

23. Mills, M.T., R.J. Paine, E.A. Insley and B.A. Egan, 1987. The Complex Terrain Dispersion Model Terrain Preprocessor System—User's Guide and Program Description. EPA Publication No. EPA–600/8–88–003. U.S. Environmental Protection Agency, Research Triangle Park, NC. (NTIS No. PB 88–162094)

24. Paine, R.J., 1987. User's Guide to the CTDM Meteorological Preprocessor Program. EPA Publication No. EPA–600/8–88–004. U.S. Environmental Protection Agency, Research Triangle Park, NC. (NTIS No. PB 88–162102)

25. Perry, S.G., D.J. Burns and A.J Cimorelli, 1990. User's Guide to CTDMPLUS: Volume 2. The Screening Mode (CTSCREEN). EPA Publication No. EPA–600/8–90–087. U.S. Environmental Protection Agency, Research Triangle Park, NC. (NTIS No. PB 91–136564)

26. Burt, E.W., 1977. Valley Model User's Guide. EPA Publication No. EPA–450/2–77–018. U.S. Environmental Protection Agency, Research Triangle Park, NC. (NTIS No. PB–274054)

27. Bjorklund, J.R. and J.F. Bowers, 1982. User's Instructions for the SHORTZ and LONGZ Computer Programs, Volumes I and II. EPA Publication No. EPA–903/9–82–004a and b. U.S. Environmental Protection Agency Region III, Philadelphia, PA. (NTIS Nos. PB 83–146092 and PB 83–146100)

28. Environmental Protection Agency, 1990. User's Guide for the Urban Airshed Model, Volume I–VIII. EPA Publication Nos. EPA–450/4–90–007a–c, d(R), e–g; EPA–454/B–93–004, respectively. U.S. Environmental Protection Agency, Research Triangle Park, NC. (NTIS Nos. PB 91–131227, PB 91–131235, PB 91–131243, PB 93–122380, PB 91–131268, PB 92–145382, and PB 92–224849, respectively, for Vols. I–VII)

29. Environmental Protection Agency, 1991. Guideline for Regulatory Application of the Urban Airshed Model. EPA Publication No. EPA–450/4–91–013 U.S. Environmental Protection Agency, Research Triangle Park, NC. (NTIS No. PB 92–108760/AS)

30. Environmental Protection Agency, 1989. Procedures for Applying City-Specific EKMA (Empirical Kinetic Modeling Approach). EPA Publication No. EPA–450/4–89–012. U.S. Environmental Protection Agency, Research Triangle Park, NC. (NTIS No. PB 90–256777)

31. Environmental Protection Agency, 1989. User's Manual for OZIPM–4 (Ozone Isopleth Plotting with Optional Mechanisms), Volumes 1 and 2. EPA Publication Nos. EPA–450/4–89–009a and b. U.S. Environmental Protection Agency, Research Triangle Park, NC. (NTIS Nos. PB 90–261488 and PB 90–255399)

32. Environmental Protection Agency, 1988. A PC Based System for Generating EKMA Input Files. EPA Publication No. EPA–450/4–88–016. U.S. Environmental Protection Agency, Research Triangle Park, NC. (NTIS No. PB 90–255407)

33. Meyer, Jr., E.L. and K.A. Baugues, 1987. Consideration of Transported Ozone and Precursors and Their Use in EKMA. EPA Publication No. EPA–450/4–89–010. U.S. Environmental Protection Agency, Research Triangle Park, NC. (NTIS No. PB 90–255415)

34. Environmental Protection Agency, 1992. Guideline for Modeling Carbon Monoxide from Roadway Intersections. EPA Publication No. EPA–454/R–92–005. U.S. Environmental Protection Agency, Research Triangle Park, NC.

35. Environmental Protection Agency, 1992. User's Guide for CAL3QHC Version 2: A Modeling Methodology for Predicting Pollutant Concentrations near Roadway Intersections. EPA Publication No. EPA–454/R–92–006. U.S. Environmental Protection Agency, Research Triangle Park, NC.

36. Chu, S. H. and E. L.Meyer, 1991. Use of Ambient Ratios to Estimate Impact of NO_x Sources on Annual NO_2 Concentrations. Proceedings, 84th Annual Meeting & Exhibition of the Air & Waste Management Association, Vancouver, B.C.; 16–21 June 1991. (16 pp.) (Docket No. A–92–65, II–A–7)

37. U.S. Department of Housing and Urban Development, 1980. Air Quality Considerations in Residential Planning. U.S. Superintendent of Documents, Washington, DC. (GPO Order Nos. 023–000–00577–8, 023–000–00576–0, 023–000–00575–1)

38. Environmental Protection Agency, 1981. Receptor Model Technical Series. Volume I: Overview of Receptor Model Application to Particulate Source Apportionment. EPA Publication No. EPA–450/4–81–016a (NTIS No. PB 82–139429); Volume II: Chemical Mass Balance. EPA Publication No. EPA–450/4–81–016b (NTIS No. PB 82–187345); Volume III (Revised): CMB User's Manual (Version 7.0). EPA Publication No. EPA–450/4–90–004 (NTIS No. PB 90–185067); Volume IV: Technical Considerations In Source Apportionment By Particle Identification. EPA Publication No. EPA–450/4–83–018 (NTIS No. PB 84–103340); Volume V: Source Apportionment Techniques and Considerations in Combining their Use. EPA Publication No. EPA–450/4–84–020 (NTIS No. PB 85–111524); Volume VI: A Guide To The Use of Factor Analysis and Multiple Regression (FA/MR) Techniques in Source Apportionment. EPA Publication No. EPA–450/4–85–007 (NTIS No. PB 86–107638). U.S. Environmental Protection Agency, Research Triangle Park, NC.

39. Pace, T.G., 1982. The Role of Receptor Models for Revised Particulate Matter Standards. A Specialty Conference on: Receptor Models Applied to Contemporary Pollution Problems. Air Pollution Control Association, Pittsburgh, PA; pp. 18–28. (Docket No. A–80–46, II–P–10)

40. Environmental Protection Agency, 1978. Supplementary Guidelines for Lead Implementation Plans. EPA Publication No. EPA–450/2–78–038. U.S. Environmental Protection Agency, Research Triangle Park, NC. (NTIS No. PB 82–232737)

41. Environmental Protection Agency, 1983. Updated Information on Approval and Promulgation of Lead Implementation Plans (DRAFT). U.S. Environmental Protection Agency, Research Triangle Park, NC. (Docket No. A–80–46, II–B–38)

42. Environmental Protection Agency, 1979. Protecting Visibility: An EPA Report to Congress. EPA Publication No. EPA–450/5–79–008. U.S. Environmental Protection Agency, Research Triangle Park, NC. (NTIS No. PB 80–220320)

43. Environmental Protection Agency, 1992. Workbook for Plume Visual Impact Screening and Analysis (Revised). EPA Publication No. EPA–454/R–92–023. U.S. Environmental Protection Agency, Research Triangle Park, NC.

44. Seigneur C., A.B. Hudischewskyj and R.W. Bergstrom, 1982. Evaluation of the EPA PLUVUE Model and the ERT Visibility Model Based on the 1979 VISTTA Data Base. EPA Publication No. EPA–450/4–82–008. U.S. Environmental Protection Agency, Research Triangle Park, NC. (NTIS No. PB 83–164723)

45. White, W.H., C. Seigneur, D.W. Heinold, M.W. Eltgroth, L.W. Richards, P.T. Roberts, P.S. Bhardwaja, W.D. Conner and W.E. Wilson, Jr., 1985. Predicting the Visibility of Chimney Plumes: An Intercomparison of Four Models with Observations at a Well-Controlled Power Plant. Atmospheric Environment, 19(3): 515–528.

46. Environmental Protection Agency, 1985. Guideline for Determination of Good Engineering Practice Stack Height (Technical Support Document for the Stack Height Regulations), Revised. EPA Publication No. EPA–450/4–80–023R. U.S. Environmental Protection Agency, Research Triangle Park, NC. (NTIS No. PB 85–225241)

47. Environmental Protection Agency, 1981. Guideline for Use of Fluid Modeling to Determine Good Engineering Practice (GEP) Stack Height. EPA Publication No. EPA–450/4–81–003. U.S. Environmental Protection Agency, Research Triangle Park, NC. (NTIS No. PB 82–145327)

48. Lawson, Jr., R.E. and W.H. Snyder, 1983. Determination of Good Engineering Practice Stack Height: A Demonstration Study for a Power Plant. EPA Publication No. EPA–600/3–83–024. U.S. Environmental Protection Agency, Research Triangle Park, NC. (NTIS No. PB 83–207407)

49. Snyder, W.H. and R.E. Lawson, Jr., 1985. Fluid Modeling Demonstration of Good Engineering-Practice Stack Height in Complex Terrain. EPA Publication No. EPA–600/3–85–022. U.S. Environmental Protection Agency, Research Triangle Park, NC. (NTIS No. PB 85–203107)

50. Turner, D.B., 1969. Workbook of Atmospheric Dispersion Estimates. PHS Publication No. 999–AP–26. U.S. Department of Health, Education and Welfare, Public Health Service, Cincinnati, OH. (NTIS No. PB–191482)

51. McElroy, J.L. and F. Pooler, Jr., 1968. St. Louis Dispersion Study, Volume II—

Analysis. National Air Pollution Control Administration Publication No. AP–53, U.S. Department of Health, Education and Welfare, Public Health Service, Arlington, VA. (NTIS No. PB–190255)

52. Irwin, J.S., 1983. Estimating Plume Dispersion—A Comparison of Several Sigma Schemes. Journal of Climate and Applied Meteorology, 22: 92–114.

53. Briggs, G.A. and F.S. Binkowski, 1985. Research on Diffusion in Atmospheric Boundary Layers: A Position Paper on Status and Needs. EPA Publication No. EPA–600/3–25–072. U.S. Environmental Protection Agency, Research Triangle Park, NC. (NTIS No. PB 86–122587)

54. Pasquill, F., 1976. Atmospheric Dispersion Parameters in Gaussian Plume Modeling, Part II. Possible Requirements for Change in the Turner Workbook Values. EPA Publication No. EPA–600/4–76–030b. U.S. Environmental Protection Agency, Research Triangle Park, NC. (NTIS No. PB–258036/3BA)

55. Turner, D.B., 1964. A Diffusion Model for an Urban Area. Journal of Applied Meteorology, 3(1): 83–91.

56. Briggs, G.A., 1975. Plume Rise Predictions. Chapter 3 in Lectures on Air Pollution and Environmental Impact Analyses. American Meteorological Society, Boston, MA; pp. 59–111.

57. Hanna, S.R., G.A. Briggs and R.P. Hosker, Jr., 1982. Plume Rise. Chapter 2 in Handbook on Atmospheric Diffusion. Technical Information Center, U.S. Department of Energy, Washington, DC; pp. 11–24. DOE/TIC–11223 (DE 82002045)

58. Environmental Protection Agency, 1995. User's Guide for the Industrial Source Complex (ISC3) Dispersion Models, Volumes 1 and 2. EPA Publication Nos. EPA–454/B–95–003a & b. U.S. Environmental Protection Agency, Research Triangle Park, NC. (NTIS Nos. PB–95–222741 and PB 95–222758, respectively)

59. Irwin, J.S., 1978. Proposed Criteria for Selection of Urban Versus Rural Dispersion Coefficients. (Draft Staff Report). Meteorology and Assessment Division, U.S. Environmental Protection Agency, Research Triangle Park, NC. (Docket No. A–80–46, II–B–8)

60. Auer, Jr., A.H., 1978. Correlation of Land Use and Cover with Meteorological Anomalies. Journal of Applied Meteorology, 17(5): 636–643.

61. Brier, G.W., 1973. Validity of the Air Quality Display Model Calibration Procedure. EPA Publication No. EPA–R4–73–017. U.S. Environmental Protection Agency, Research Triangle Park, NC. (NTIS No. PB–218716)

62. Environmental Protection Agency, 1985 and ff. Compilation of Air Pollutant Emission Factors, Volume I: Stationary Point and Area Sources (Fourth Edition; GPO Stock No. 055–000–00251–7), and Supplements; Volume II: Mobile Sources (NTIS PB 87–205266) and Supplement(s). EPA Publication No. AP–42. U.S. Environmental Protection Agency, Research Triangle Park, NC.

63. Environmental Protection Agency, 1987. Ambient Air Monitoring Guidelines for Prevention of Significant Deterioration (PSD). EPA Publication No. EPA–450/4–87–007. U.S. Environmental Protection Agency, Research Triangle Park, NC. (NTIS No. PB 90–168030)

64. Landsberg, H.E. and W.C. Jacobs, 1951. Compendium of Meteorology. American Meteorological Society, Boston, MA; pp. 976–992.

65. Burton, C.S., T.E. Stoeckenius and J.P. Nordin, 1983. The Temporal Representativeness of Short-Term Meteorological Data Sets: Implications for Air Quality Impact Assessments. Systems Applications, Inc., San Rafael, CA. (Docket No. A–80–46, II–G–11)

66. Environmental Protection Agency, 1987. On-Site Meteorological Program Guidance for Regulatory Modeling Applications. EPA Publication No. EPA–450/4–87–013. U.S. Environmental Protection Agency, Research Triangle Park, NC. (NTIS No. PB 87–227542)

67. Environmental Protection Agency, 1989. Quality Assurance for Air Pollution Measurement Systems, Volume IV—Meteorological Measurements. EPA Publication No. EPA–600/4–82–060R. U.S. Environmental Protection Agency, Research Triangle Park, NC.

68. Irwin, J.S., 1980. Dispersion Estimate Suggestion #8: Estimation of Pasquill Stability Categories. U.S. Environmental Protection Agency, Research Triangle Park, NC (Docket No. A–80–46, II–B–10)

69. Mitchell, Jr., A.E. and K.O. Timbre, 1979. Atmospheric Stability Class from Horizontal Wind Fluctuation. Presented at 72nd Annual Meeting of Air Pollution Control Association, Cincinnati, OH; June 24–29, 1979. (Docket No. A–80–46, II–P–9)

70. Nuclear Regulatory Commission, 1972. Meteorological Programs in Support of Nuclear Power Plants. Regulatory Guide 1.23 (DRAFT). U.S. Nuclear Regulatory Commission, Office of Standards Development, Washington, DC. (Docket No. A–80–46, II–P–11)

71. Smedman-Hogstrom, A. and V. Hogstrom, 1978. A Practical Method for Determining Wind Frequency Distributions for the Lowest 200m from Routine Meteorological Data. Journal of Applied Meteorology, 17(7): 942–954.

72. Smith, T.B. and S.M. Howard, 1972. Methodology for Treating Diffusivity. MRI 72 FR–1030. Meteorology Research, Inc., Altadena, CA. (Docket No. A–80–46, II–P–8)

73. Environmental Protection Agency, 1984. Calms Processor (CALMPRO) User's Guide. EPA Publication No. EPA–901/9–84–001. U.S. Environmental Protection Agency, Region I, Boston, MA. (NTIS No. PB 84–229467)

74. Burton, C.S., 1981. The Role of Atmospheric Models in Regulatory Decision-Making: Summary Report. Systems Applications, Inc., San Rafael, CA. Prepared under contract No. 68–01–5845 for U.S. Environmental

Protection Agency, Research Triangle Park, NC. (Docket No. A–80–46, II–M–6)

75. Environmental Protection Agency, 1981. Proceedings of the Second Conference on Air Quality Modeling, Washington, DC. U.S. Environmental Protection Agency, Research Triangle Park, NC. (Docket No. A–80–46, II–M–16)

76. Hanna, S.R., 1982. Natural Variability of Observed Hourly SO_2 and CO Concentrations in St. Louis. Atmospheric Environment, 16(6): 1435–1440.

77. Fox, D.G., 1983. Uncertainty in Air Quality Modeling. Bulletin of the American Meteorological Society, 65(1): 27–36.

78. Bowne, N.E., 1981. Validation and Performance Criteria for Air Quality Models. Appendix F in Air Quality Modeling and the Clean Air Act: Recommendations to EPA on Dispersion Modeling for Regulatory Applications. American Meteorological Society, Boston, MA; pp. 159–171. (Docket No. A–80–46, II–A–106)

79. Bowne, N.E. and R.J. Londergan, 1983. Overview, Results, and Conclusions for the EPRI Plume Model Validation and Development Project: Plains Site. EPRI EA–3074. Electric Power Research Institute, Palo Alto, CA.

80. Moore, G.E., T.E. Stoeckenius and D.A. Stewart, 1982. A Survey of Statistical Measures of Model Performance and Accuracy for Several Air Quality Models. EPA Publication No. EPA–450/4–83–001. U.S. Environmental Protection Agency, Research Triangle Park, NC. (NTIS No. PB 83–260810)

81. Rhoads, R.G., 1981. Accuracy of Air Quality Models. Staff Report. U.S. Environmental Protection Agency, Research Triangle Park, NC. (Docket No. A–80–46, II–G–6)

82. Pasquill, F., 1974. Atmospheric Diffusion, 2nd Edition. John Wiley and Sons, New York, NY; 479 pp.

83. Austin, B.S., T.E. Stoeckenius, M.C. Dudik and T.S. Stocking, 1988. User's Guide to the Expected Exceedances System. Systems Applications, Inc., San Rafael, CA. Prepared under Contract No. 68–02–4352 Option I for the U.S. Environmental Protection Agency, Research Triangle Park, NC. (Docket No. A–88–04, II–I–3)

84. Thrall, A.D., T.E. Stoeckenius and C.S. Burton, 1985. A Method for Calculating Dispersion Modeling Uncertainty Applied to the Regulation of an Emission Source. Systems Applications, Inc., San Rafael, CA. Prepared for the U.S. Environmental Protection Agency, Research Triangle Park, NC. (Docket No. A–80–46, IV–G–1)

85. Environmental Protection Agency, 1981. Plan for Evaluating Model Performance. Staff Report. U.S. Environmental Protection Agency, Research Triangle Park, NC. (Docket No. A–80–46, II–G–6)

86. Environmental Protection Agency, 1979. Guideline for the Interpretation of Ozone Air Quality Standards. EPA Publication No. EPA 450/4–79–003. U.S. Environmental Protection Agency, Research Triangle Park, NC. (NTIS No. PB–292271)

87. Environmental Protection Agency, 1974. Guidelines for Air Quality Maintenance Planning and Analysis, Volume 12: Applying Atmospheric Simulation Models to Air Quality Maintenance Areas. EPA Publication No. EPA–450/4–74–013. U.S. Environmental Protection Agency, Research Triangle Park, NC. (NTIS No. PB–237750)

88. Environmental Protection Agency, 1977. Guidelines for Interpretation of Air Quality Standards (Revised). OAQPS No. 1.2–008. U.S. Environmental Protection Agency, Research Triangle Park, NC. (NTIS No. PB 81–196420)

89. Environmental Protection Agency, 1986. Emissions Trading Policy Statement; General Principles for Creation, Banking, and Use of Emission Reduction Credits. FEDERAL REGISTER, 51(233): 43814–43860.

90. Environmental Research and Technology, 1987. User's Guide to the Rough Terrain Diffusion Model (RTDM), Rev. 3.20. ERT document No. PD535–585. Environmental Research and Technology, Inc., Concord, MA (NTIS No. PB 88–171467)

91. Burns, D.J., S.G. Perry and A.J. Cimorelli, 1991. An Advanced Screening Model for Complex Terrain Applications. Paper presented at the 7th Joint Conference on Applications of Air Pollution Meteorology (cosponsored by the American Meteorological Society and the Air & Waste Management Association), January 13–18, 1991, New Orleans, LA.

92. Perry, S.G., 1992. CTDMPLUS: A Dispersion Model for Sources near Complex Topography. Part I: Technical Formulations. Journal of Applied Meteorology, 31(7): 633–645.

93. Paumier, J.O., S.G. Perry and D.J. Burns, 1992. CTDMPLUS: A Dispersion Model for Sources near Complex Topography. Part II: Performance Characteristics. Journal of Applied Meteorology, 31(7): 646–660.

94. Environmental Protection Agency, 1986. Evaluation of Mobile Source Air Quality Simulation Models. EPA Publication No. EPA–450/4–86–002. U.S. Environmental Protection Agency, Research Triangle Park, NC. (NTIS No. PB 86–167293)

95. Shannon, J.D., 1987. Mobile Source Modeling Review. A report prepared under a cooperative agreement with the Environmental Protection Agency. (Docket No. A–88–04, II–J–2)

96. Environmental Protection Agency, 1991. Emission Inventory Requirements for Carbon Monoxide State Implementation Plans. EPA Publication No. EPA–450/4–91–011. U.S. Environmental Protection Agency, Research Triangle Park, NC. (NTIS No. PB 92–112150)

97. Environmental Protection Agency, 1992. Guideline for Regulatory Application of the Urban Airshed Model for Areawide Carbon Monoxide. EPA Publication No. EPA–450/4–

92–011 a and b. U.S. Environmental Protection Agency, Research Triangle Park, NC. (NTIS Nos. PB 92–213222 and PB 92–213230)

98. Environmental Protection Agency, 1992. Technical Support Document to Aid States with the Development of Carbon Monoxide State Implementation Plans. EPA Publication No. EPA–452/R–92–003. U.S. Environmental Protection Agency, Research Triangle Park, NC. (NTIS No. PB 92–233055)

99. Environmental Protection Agency, 1986. Evaluation of Short-Term Long-Range Transport Models, Volumes I and II. EPA Publication Nos. EPA–450/4–86–016 a and b. U.S. Environmental Protection Agency, Research Triangle Park, NC. (NTIS Nos. PB 87–142337 and PB 87–142345)

100. McNider, R.T., 1987. Review of Short-Term Long-Range Models. A report prepared under a cooperative agreement with the Environmental Protection Agency. (Docket No. A–88–04, II–I–10)

101. Lamb, R.G., 1983. A Regional Scale (1,000km) Model of Photochemical Air Pollution, Part I-Theoretical Formulation, Part II-Input Processor Network Design, and Part III-Tests of Numerical Algorithms. EPA Publication Nos. EPA–600/3–83–035, EPA–600/3–84–085, and EPA–600/3–85–037. U.S. Environmental Protection Agency, Research Triangle Park, NC. (NTIS Nos. PB 83–207688, PB 84–232651, and PB 85–203818, respectively)

102. Young, J.O., M. Aissa, T.L. Boehm et al., 1989. Development of the Regional Oxidant Model, Version 2.1. EPA Publication No. EPA–600/3–89–044. U.S. Environmental Protection Agency, Research Triangle Park, NC. (NTIS No. PB 89–194252)

103. Environmental Protection Agency, 1991. The Regional Oxidant Model (ROM) User's Guide. Part 1: The ROM Preprocessors. EPA Publication No. EPA–600/8–90–083a (NTIS No. PB 91–171926); Part 2: The ROM Processor Network. EPA Publication No. EPA–600/8–90–083b (NTIS No. PB 91–171934); Part 3: The Core Model. EPA Publication No. EPA–600/8–90–083c (NTIS No. PB 91–171942). U.S. Environmental Protection Agency, Research Triangle Park, NC.

104. Chang, J.S., R.A. Brost, I.S.A. Isaksen, S. Madronich, P. Middleton, W.R. Stockwell and C.J. Waleck, 1987. A Three-Dimensional Eulerian Acid Deposition Model: Physical Concepts and Formulation. Journal of Geophysical Research, 92(D12): 14681–14700.

105. Environmental Protection Agency, 1987. Protocol for Applying and Validating the CMB. U.S. Environmental Protection Agency. EPA Publication No. EPA–450/4–87–010. U.S. Environmental Protection Agency, Research Triangle Park, NC. (NTIS No. PB 87–206496)

106. Environmental Protection Agency, 1987. Protocol for Reconciling Differences Among Receptor and Dispersion Models. EPA Publication No. EPA–450/4–87–008. U.S. Environmental Protection Agency, Research Triangle Park, NC. (NTIS No. PB 87–206504)

107. Environmental Protection Agency, 1988. Chemical Mass Balance Model Diagnostics. EPA Publication No. EPA–450/4–88–005. U.S. Environmental Protection Agency, Research Triangle Park, NC. (NTIS No. PB 88–208319)

108. Environmental Protection Agency, 1987. PM–10 SIP Development Guideline. EPA Publication No. EPA–450/2–86–001. U.S. Environmental Protection Agency, Research Triangle Park, NC. (NTIS No. PB 87–206488)

109. Environmental Protection Agency, 1987. Example Modeling to Illustrate SIP Development for The PM–10 NAAQS. EPA Publication No. EPA–450/4–87–012. U.S. Environmental Protection Agency, Research Triangle Park, NC. (NTIS No. PB 87–205191)

110. Sestak, M. L. and A. R. Riebau, 1988. SASEM Simple Approach Smoke Estimation Model. U.S. Bureau of Land Management, Technical Note 382. BLM/YA/PT–88/003 + 7000. Available from Printed Materials Distribution Section, BLM Service Center (SC–658B), Denver, CO 80225–0047. (NTIS No. PB 90–185653)

111. Environmental Protection Agency, 1992. A Modeling Protocol for Applying Mesopuff II to Long Range Transport Problems. EPA Publication No. EPA–454/R–92–021. U.S. Environmental Protection Agency, Research Triangle Park, NC.

112. DiCristofaro, D.C. and S.R. Hanna, 1989. The Offshore and Coastal Dispersion (OCD) Model, Volume I: User's Guide, Volume II: Appendices. Version 4 Prepared for Minerals Management Services by Sigma Research Corporation, Westford, MA. (Docket No. A–88–04, II–D–A–06)

113. Federal Aviation Administration, 1988. A Microcomputer Pollution Model for Civilian Airports and Air Force Bases, Model Description, Model Application and Background, and EDMS User's Guide (June 1991). Federal Aviation Administration Publication Nos. FAA–EE–88–4 and 5; FAA–EE–91–3, respectively. United States Air Force Publication Nos. ESL–TR–88–53 and 55; ESL–TR–91–31, respectively. Federal Aviation Administration, Office of Environment and Energy, Washington, DC (NTIS Nos. ADA 199003, ADA 199794, and ADA 240528, respectively)

114. Environmental Protection Agency, 1992. Workbook of Screening Techniques for Assessing Impacts of Toxic Air Pollutants (Revised). EPA Publication No. EPA–454/R–92–024. U.S. Environmental Protection Agency, Research Triangle Park, NC.

115. Environmental Protection Agency, 1990. User's Guide to TSCREEN: A Model for Screening Toxic Air Pollutant Concentrations. EPA Publication No. EPA–450/4–90–013. U.S. Environmental Protection Agency, Research Triangle Park, NC. (NTIS No. PB 91–141820)

116. Environmental Protection Agency, 1989. Hazardous Waste TSDF Fugitive Particulate Matter Air Emissions Guidance Document. EPA Publication No. EPA–450/3–89–019. U.S. Environmental Protection Agency, Research Triangle Park, NC. (NTIS No. PB 90–103250)

117. Environmental Protection Agency, 1989. Procedures for Conducting Air Pathway Analyses for Superfund Applications, Volume I Applications of Air Pathway Analyses for Superfund Activities and Volume IV Procedures for Dispersion Modeling and Air Monitoring for Superfund Air Pathway Analysis, EPA–450/1–89–001 and 004. U.S. Environmental Protection Agency, Research Triangle Park, NC. (NTIS Nos. PB 89–113374 and PB 89–113382)

118. Environmental Protection Agency, 1988. Air Dispersion Modeling as Applied to Hazardous Waste Incinerator Evaluations, An Introduction For the Permit Writer. U.S. Environmental Protection Agency, Research Triangle Park, NC. (Docket No. A–88–04, II–J–10)

119. Environmental Protection Agency, 1989. U.S. EPA Office of Toxic Substances Graphical Exposure Modeling System (GEMS) User's Guide and GAMS Version 3.0 User's Guide (DRAFT). Prepared under Contract No. 68–02–0481 for the U.S. Environmental Protection Agency, Washington, DC (Docket No. A–88–04, II–J–5a and II–J–13)

120. Federal Emergency Management Agency, 1989. Handbook of Chemical Hazard Analysis Procedures. Available on request by writing to: Federal Emergency Management Agency, Publications Office, 500 C Street SW., Washington, DC 20472.

121. Environmental Protection Agency, 1987. Technical Guidance for Hazards Analysis: Emergency Planning for Extremely Hazardous Substances. Available on request by telephone: 1–(800)–535–0202.

122. Environmental Protection Agency, 1988. Superfund Exposure Assessment Manual. EPA–540/1–88–001, OSWER Directive 9285.5–1. Office of Remedial Response, Washington, DC 20460. (NTIS No. PB 89–135859)

123. Environmental Protection Agency, 1989. Incineration of Sewage Sludge; Technical Support Document. Office of Water Regulations and Standards, Washington, DC 20460. (NTIS No. PB 89–136592)

124. Environmental Protection Agency, 1989. Sludge Incineration Modeling (SIM) System User's Guide (Draft). Office of Pesticides and Toxic Substances, Exposure Evaluation Division, Washington, DC 20460. (NTIS No. PB 89–138762)

125. Environmental Protection Agency, 1989. Risk Assessment Guidance for Superfund. Volume I: Human Health Evaluation Manual Part A. (Interim Final). OSWER Directive 9285.7–01a. Office of Solid Waste and Emergency Response, Washington, DC 20460.

126. Environmental Protection Agency, 1986. User's Manual for the Human Exposure Model (HEM). EPA Publication No. EPA–450/5–86–001. Office of Air Quality Planning and Standards, Research Triangle Park, NC. 27711.

127. Environmental Protection Agency, 1992. A Tiered Modeling Approach for Assessing the Risks Due to Sources of Hazardous Air Pollutants. EPA Publication No. EPA–450/4–92–001. Environmental Protection Agency, Research Triangle Park, NC. (NTIS No. PB 92–164748)

128. Environmental Protection Agency, 1992. Toxic Modeling System Short-term (TOXST) User's Guide. EPA Publication No. EPA–450/4–92–002. Environmental Protection Agency, Research Triangle Park, NC.

129. Environmental Protection Agency, 1992. Toxic Modeling System Long-term (TOXLT) User's Guide. EPA Publication No. EPA–450/4–92–003. Environmental Protection Agency, Research Triangle Park, NC.

130. Environmental Protection Agency, 1989. User's Guide for the DEGADIS 2.1 Dense Gas Dispersion Model. EPA Publication No. EPA–450/4–89–019. U.S. Environmental Protection Agency, Research Triangle Park, NC. (NTIS No. PB 90–213893)

131. Environmental Protection Agency, 1991. Guidance on the Application of Refined Models for Air Toxics Releases. EPA Publication No. EPA–450/4–91–007. Environmental Protection Agency, Research Triangle Park, NC. (NTIS No. PB 91–190983)

132. Perry, R.H. and Chilton, C.H., 1973. Chemical Engineers' Handbook, Fifth Edition, McGraw-Hill Book Company, New York, NY.

133. Environmental Protection Agency, 1988. User's Guide to SDM—A Shoreline Dispersion Model. EPA Publication No. EPA–450/4–88–017. U.S. Environmental Protection Agency, Research Triangle Park, NC. (NTIS No. PB 89–164305)

134. Environmental Protection Agency, 1987. Analysis and Evaluation of Statistical Coastal Fumigation Models. EPA Publication No. EPA–450/4–87002. U.S. Environmental Protection Agency, Research Triangle Park, NC. (NTIS No. PB 87–175519)

135. Irwin, J.S., J.O. Paumier and R.W. Brode, 1988. Meteorological Processor for Regulatory Models (MPRM 1.2) User's Guide. EPA Publication No. EPA–600/3–88–043R. U.S. Environmental Protection Agency, Research Triangle Park, NC. (NTIS No. PB 89–127526)

136. Bowen, B.M., J.M. Dewart and A.I. Chen, 1983. Stability Class Determination: A Comparison for One Site. Proceedings, Sixth Symposium on Turbulence and Diffusion. American Meteorological Society, Boston, MA; pp. 211–214. (Docket No. A–92–65, II–A–5)

137. Environmental Protection Agency, 1993. An Evaluation of a Solar Radiation/Delta-T (SRDT) Method for Estimating Pasquill-Gifford (P–G) Stability Categories.

EPA Publication No. EPA–454/R–93–055. U.S. Environmental Protection Agency, Research Triangle Park, NC. (NTIS No. PB 94–113958)

138. Environmental Protection Agency, 1993. PCRAMMET User's Guide. EPA Publication No. EPA–454/B–93–009. U.S. Environmental Protection Agency, Research Triangle Park, NC.

13.0 BIBLIOGRAPHY[i]

American Meteorological Society, 1971–1985. Symposia on Turbulence, Diffusion, and Air Pollution (1st–7th). Boston, MA.

American Meteorological Society, 1977–1984. Joint Conferences on Applications of Air Pollution Meteorology (1st–4th). Sponsored by the American Meteorological Society and the Air Pollution Control Association. Boston, MA.

American Meteorological Society, 1978. Accuracy of Dispersion Models. Bulletin of the American Meteorological Society, 59(8): 1025–1026.

1American Meteorological Society, 1981. Air Quality Modeling and the Clean Air Act: Recommendations to EPA on Dispersion Modeling for Regulatory Applications. Boston, MA.

Briggs, G.A., 1969. Plume Rise. U.S. Atomic Energy Commission Critical Review Series, Oak Ridge National Laboratory, Oak Ridge, TN.

Dickerson, W.H. and P.H. Gudiksen, 1980. ASCOT FY 79 Program Report. Report UCRL–52899, ASCOT 80–1. Lawrence Livermore National Laboratory, Livermore, CA.

Drake, R.L. and S.M. Barrager, 1979. Mathematical Models for Atmospheric Pollutants. EPRI EA–1131. Electric Power Research Institute, Palo Alto, CA.

Environmental Protection Agency, 1978. Workbook for Comparison of Air Quality Models. EPA Publication No. EPA–450/2–78–028 a and b. U.S. Environmental Protection Agency, Research Triangle Park, NC.

Fox, D.G., and J.E. Fairobent, 1981. NCAQ Panel Examines Uses and Limitations of Air Quality Models. Bulletin of the American Meteorological Society, 62(2): 218–221.

Gifford, F.A., 1976. Turbulent Diffusion Typing Schemes: A Review. Nuclear Safety, 17(1): 68–86.

Gudiksen, P.H., and M.H. Dickerson, Eds., Executive Summary: Atmospheric Studies in Complex Terrain Technical Progress Report FY–1979 Through FY–1983. Lawrence Livermore National Laboratory, Livermore, CA. (Docket Reference No. II–I–103)

Hales, J.M., 1976. Tall Stacks and the Atmospheric Environment. EPA Publication No. EPA–450/3–76–007. U.S. Environmental Protection Agency, Research Triangle Park, NC.

Hanna, S.R., G.A. Briggs, J. Deardorff, B.A. Egan, G.A. Gifford and F. Pasquill, 1977. AMS Workshop on Stability Classification Schemes And Sigma Curves—Summary of Recommendations. Bulletin of the American Meteorological Society, 58(12): 1305–1309.

Hanna, S. R., G. A. Briggs and R. P. Hosker, Jr., 1982. Handbook on Atmospheric Diffusion. Technical Information Center, U.S. Department of Energy, Washington, D.C.

Haugen, D. A., Workshop Coordinator, 1975. Lectures on Air Pollution and Environmental Impact Analyses. Sponsored by the American Meteorological Society, Boston, MA.

Hoffnagle, G. F., M. E. Smith, T. V. Crawford and T. J. Lockhart, 1981. On-site Meteorological Insgtrumentation Requirements to Characterize Diffusion from Point Sources—A Workshop, 15–17 January 1980, Raleigh, NC. Bulletin of the American Meteorological Society, 62(2): 255–261.

McMahon, R. A. and P. J. Denison, 1979. Empirical Atmospheric Deposition Parameters—A Survey. Atmospheric Environment, 13: 571–585.

McRae, G. J., J. A. Leone and J. H. Seinfeld, 1983. Evaluation of Chemical Reaction Mechanisms for Photochemical Smog. Part I: Mechanism Descriptions and Documentation. EPA Publication No. EPA–600/3/83–086. U.S. Environmental Protection Agency, Research Triangle Park, NC.

Pasquill, F. and F. B. Smith, 1983. Atmospheric Diffusion, 3rd Edition. Ellis Horwood Limited, Chichester, West Sussex, England, 438 pp.

Roberts, J. J., Ed., 1977. Report to U.S. EPA of the Specialists' Conference on the EPA Modeling Guideline. U.S. Environmental Protection Agency, Research Triangle Park, NC.

Randerson, D., Ed., 1984. Atmospheric Science and Power Production. DOE/TIC 27601. Office of Scientific and Technical Information, U.S. Department of Energy, Oak Ridge, TN.

Smith, M. E., Ed., 1973. Recommended Guide for the Prediction of the Dispersion of Airborne Effluents. The American Society of Mechanical Engineers, New York, NY.

Stern, A. C., Ed., 1976. Air Pollution, Third Edition, Volume I: Air Pollutants, Their Transformation and Transport. Academic Press, New York, NY.

Turner, D. B., 1979. Atmospheric Dispersion Modeling: A Critical Review. Journal of the Air Pollution Control Association, 29(5): 502–519.

Whiteman, C. D. and K. J. Allwine, 1982. Green River Ambient Model Assessment Program FY–1982 Progress Report. PNL–4520. Pacific Northwest Laboratory, Richland, WA.

[i] The documents listed here are major sources of supplemental information on the theory and application of mathematical air quality models.

14.0 GLOSSARY OF TERMS

Air quality: Ambient pollutant concentrations and their temporal and spatial distribution.

Algorithm: A specific mathematical calculation procedure. A model may contain several algorithms.

Background: Ambient pollutant concentrations due to (1) natural sources, (2) nearby sources other than the one(s) currently under consideration; and (3) unidentified sources.

Calibrate: An objective adjustment using measured air quality data (e.g., an adjustment based on least-squares linear regression).

Calm: For purposes of air quality modeling, calm is used to define the situation when the wind is indeterminate with regard to speed or direction.

Complex Terrain: Terrain exceeding the height of the stack being modeled.

Computer Code: A set of statements that comprise a computer program.

Evaluate: To appraise the performance and accuracy of a model based on a comparison of concentration estimates with observed air quality data.

Fluid Modeling: Modeling conducted in a wind tunnel or water channel to quantitatively evaluate the influence of buildings and/or terrain on pollutant concentrations.

Fugitive Dust: Dust discharged to the atmosphere in an unconfined flow stream such as that from unpaved roads, storage piles and heavy construction operations.

Model: A quantitative or mathematical representation or simulation which attempts to describe the characteristics or relationships of physical events.

Preferred Model: A refined model that is recommended for a specific type of regulatory application.

Receptor: A location at which ambient air quality is measured or estimated.

Receptor Models: Procedures that examine an ambient monitor sample of particulate matter and the conditions of its collection to infer the types or relative mix of sources impacting on it during collection.

Refined Model: An analytical technique that provides a detailed treatment of physical and chemical atmospheric processes and requires detailed and precise input data. Specialized estimates are calculated that are useful for evaluating source impact relative to air quality standards and allowable increments. The estimates are more accurate than those obtained from conservative screening techniques.

Rollback: A simple model that assumes that if emissions from each source affecting a given receptor are decreased by the same percentage, ambient air quality concentrations decrease proportionately.

Screening Technique: A relatively simple analysis technique to determine if a given source is likely to pose a threat to air quality. Concentration estimates from screening techniques are conservative.

Simple Terrain: An area where terrain features are all lower in elevation than the top of the stack of the source.

APPENDIX A TO APPENDIX W OF PART 51—SUMMARIES OF PREFERRED AIR QUALITY MODELS

Table of Contents

A.0 Introduction and Availability
A.1 Buoyant Line and Point Source Dispersion Model (BLP)
A.2 CALINE3
A.3 Climatological Dispersion Model (CDM 2.0)
A.4 Gaussian-Plume Multiple Source Air Quality Algorithm (RAM)
A.5 Industrial Source Complex Model (ISC3)
A.6 Multiple Point Gaussian Dispersion Algorithm With Terrain Adjustment (MPTER)
A.7 Single Source (CRSTER) MODEL
A.8 Urban Airshed Model (UAM)
A.9 Offshore and Coastal Dispersion Model (OCD)
A.10 Emissions and Dispersion Model System (EDMS)
A.11 Complex Terrain Dispersion Model Plus Algorithms for Unstable situations (CTDMPLUS)
A.REF References

A.0 INTRODUCTION AND AVAILABILITY

This appendix summarizes key features of refined air quality models preferred for specific regulatory applications. For each model, information is provided on availability, approximate cost in 1990, regulatory use, data input, output format and options, simulation of atmospheric physics, and accuracy. These models may be used without a formal demonstration of applicability provided they satisfy the recommendations for regulatory use; not all options in the models are necessarily recommended for regulatory use.

Many of these models have been subjected to a performance evaluation using comparisons with observed air quality data. A summary of such comparisons for models contained in this appendix is included in ''A Survey of Statistical Measures of Model Performance and Accuracy for Several Air Quality Models,'' EPA–450/4–83–001. Where possible, several of the models contained herein have been subjected to evaluation exercises, including (1) statistical performance tests recommended by the American Meteorological Society and (2) peer scientific reviews. The models in this appendix have been selected on the basis of the results of the model evaluations, experience with previous use, familiarity of the model to various air

quality programs, and the costs and resource requirements for use.

The Availability statement for models in this Appendix that refers to the User's Network for Applied Modeling of Air Pollution (UNAMAP) should be ignored since UNAMAP is no longer operational. However, all models and user's documentation in this appendix are available from: Computer Products, National Technical Information Service (NTIS), U.S. Department of Commerce, Springfield, VA 22161, Phone: (703) 487–4650.

In addition, model codes and selected, abridged user's guides are available from the Support Center for Regulatory Air Models Bulletin Board System[19] (SCRAM BBS), telephone (919) 541–5742. The SCRAM BBS is an electronic bulletin board system designed to be user friendly and accessible from anywhere in the country. Model users with personal computers are encouraged to use the SCRAM BBS to download current model codes and text files.

A.1 Buoyant Line and Point Source Dispersion Model (BLP)

Reference

Schulman, Lloyd L., and Joseph S. Scire, 1980. Buoyant Line and Point Source (BLP) Dispersion Model User's Guide. Document P–7304B. Environmental Research and Technology, Inc., Concord, MA. (NTIS No. PB 81–164642)

Availability

This model is available as part of UNAMAP (Version 6). The computer code is available on magnetic tape from: Computer Products, National Technical Information Service, U.S. Department of Commerce, Springfield, VA 22161, Phone: (703) 487–4650.

Abstract:

BLP is a Gaussian plume dispersion model designed to handle unique modeling problems associated with aluminum reduction plants, and other industrial sources where plume rise and downwash effects from stationary line sources are important.

a. *Recommendations for Regulatory Use*

The BLP model is appropriate for the following applications:

Aluminum reduction plants which contain buoyant, elevated line sources;

Rural areas;

Transport distances less than 50 kilometers;

Simple terrain; and

One hour to one year averaging times.

The following options should be selected for regulatory applications:

Rural (IRU=1) mixing height option;

Default (no selection) for plume rise wind shear (LSHEAR), transitional point source plume rise (LTRANS), vertical potential temperature gradient (DTHTA), vertical wind speed power law profile exponents (PEXP), maximum variation in number of stability classes per hour (IDELS), pollutant decay (DECFAC), the constant in Briggs' stable plume rise equation (CONST2), constant in Briggs' neutral plume rise equation (CONST3), convergence criterion for the line source calculations (CRIT), and maximum iterations allowed for line source calculations (MAXIT); and

Terrain option (TERAN) set equal to 0.0, 0.0, 0.0, 0.0, 0.0, 0.0.

For other applications, BLP can be used if it can be demonstrated to give the same estimates as a recommended model for the same application, and will subsequently be executed in that mode.

BLP can be used on a case-by-case basis with specific options not available in a recommended model if it can be demonstrated, using the criteria in section 3.2, that the model is more appropriate for a specific application.

b. *Input Requirements*

Source data: Point sources require stack location, elevation of stack base, physical stack height, stack inside diameter, stack gas exit velocity, stack gas exit temperature, and pollutant emission rate. Line sources require coordinates of the end points of the line, release height, emission rate, average line source width, average building width, average spacing between buildings, and average line source buoyancy parameter.

Meteorological data: Hourly surface weather data from punched cards or from the preprocessor program RAMMET which provides hourly stability class, wind direction, wind speed, temperature, and mixing height.

Receptor data: Locations and elevations of receptors, or location and size of receptor grid or request automatically generated receptor grid.

c. *Output*

Printed output (from a separate post-processor program) includes:

Total concentration or, optionally, source contribution analysis; monthly and annual frequency distributions for 1-, 3-, and 24-hour average concentrations; tables of 1-, 3-, and 24-hour average concentrations at each receptor; table of the annual (or length of run) average concentrations at each receptor;

Five highest 1-, 3-, and 24-hour average concentrations at each receptor; and

Fifty highest 1-, 3-, and 24-hour concentrations over the receptor field.

d. *Type of Model*

BLP is a gaussian plume model.

e. *Pollutant Types*

BLP may be used to model primary pollutants. This model does not treat settling and deposition.

f. *Source-Receptor Relationship*

BLP treats up to 50 point sources, 10 parallel line sources, and 100 receptors arbitrarily located.

User-input topographic elevation is applied for each stack and each receptor.

g. *Plume Behavior*

BLP uses plume rise formulas of Schulman and Scire (1980).

Vertical potential temperature gradients of 0.02 Kelvin per meter for E stability and 0.035 Kelvin per meter are used for stable plume rise calculations. An option for user input values is included.

Transitional rise is used for line sources.

Option to suppress the use of transitional plume rise for point sources is included.

The building downwash algorithm of Schulman and Scire (1980) is used.

h. *Horizontal Winds*

Constant, uniform (steady-state) wind is assumed for an hour.

Straight line plume transport is assumed to all downwind distances.

Wind speeds profile exponents of 0.10, 0.15, 0.20, 0.25, 0.30, and 0.30 are used for stability classes A through F, respectively. An option for userdefined values and an option to suppress the use of the wind speed profile feature are included.

i. *Vertical Wind Speed*

Vertical wind speed is assumed equal to zero.

j. *Horizontal Dispersion*

Rural dispersion coefficients are from Turner (1969), with no adjustment made for variations in surface roughness or averaging time.

Six stability classes are used.

k. *Vertical Dispersion*

Rural dispersion coefficients are from Turner (1969), with no adjustment made for variations in surface roughness.

Six stability classes are used.

Mixing height is accounted for with multiple reflections until the vertical plume standard deviation equals 1.6 times the mixing height; uniform mixing is assumed beyond that point.

Perfect reflection at the ground is assumed.

l. *Chemical Transformation*

Chemical transformations are treated using linear decay. Decay rate is input by the user.

m. *Physical Removal*

Physical removal is not explicitly treated.

n. *Evaluation Studies*

Schulman, L.L., and J.S. Scire, 1980. Buoyant Line and Point Source (BLP) Dispersion Model User's Guide, P–7304B. Environmental Research and Technology, Inc., Concord, MA.

Scire, J.S., and L.L. Schulman, 1981. Evaluation of the BLP and ISC Models with SF_6 Tracer Data and SO_2 Measurements at Aluminum Reduction Plants. APCA Specialty Conference on Dispersion Modeling for Complex Sources, St. Louis, MO.

A.2 CALINE3

Reference

Benson, Paul E, 1979. CALINE3—A Versatile Dispersion Model for Predicting Air Pollutant Levels Near Highways and Arterial Streets. Interim Report, Report Number FHWA/CA/TL–79/23. Federal Highway Administration, Washington, DC. (NTIS No. PB 80–220841)

Availability

The CALINE3 model computer tape is available from NTIS as PB 80–220833. The model is also available from the California Department of Transportation (manual free of charge and approximately $50 for the computer tape). Requests should be directed to: Mr. Marlin Beckwith, Chief, Office of Computer Systems, California Department of Transportation, 1120 N. Street, Sacramento, CA 95814.

Abstract

CALINE3 can be used to estimate the concentrations of nonreactive pollutants from highway traffic. This steady-state Gaussian model can be applied to determine air pollution concentrations at receptor locations downwind of ''at-grade,'' ''fill,'' ''bridge,'' and ''cut section'' highways located in relatively uncomplicated terrain. The model is applicable for any wind direction, highway orientation, and receptor location. The model has adjustments for averaging time and surface roughness, and can handle up to 20 links and 20 receptors. It also contains an algorithm for deposition and settling velocity so that particulate concentrations can be predicted.

a. *Recommendations for Regulatory Use*

CALINE–3 is appropriate for the following applications:

Highway (line) sources;

Urban or rural areas;
Simple terrain;
Transport distances less than 50 kilometers; and
One-hour to 24-hour averaging times.

b. *Input Requirements*

Source data: Up to 20 highway links classed as ''at-grade,'' ''fill,'' ''bridge,'' or ''depressed''; coordinates of link end points; traffic volume; emission factor; source height; and mixing zone width.
Meteorological data: Wind speed, wind angle (measured in degrees clockwise from the Y axis), stability class, mixing height, ambient (background to the highway) concentration of pollutant.
Receptor data: Coordinates and height above ground for each receptor.

c. *Output*

Printed output includes:
Concentration at each receptor for the specified meteorological condition.

d. *Type of Model*

CALINE–3 is a Gaussian plume model.

e. *Pollutant Types*

CALINE–3 may be used to model primary pollutants.

f. *Source-Receptor Relationship*

Up to 20 highway links are treated.
CALINE–3 applies user input location and emission rate for each link. User-input receptor locations are applied.

g. *Plume Behavior*

Plume rise is not treated.

h. *Horizontal Winds*

User-input hourly wind speed and direction are applied.
Constant, uniform (steady-state) wind is assumed for an hour.

i. *Vertical Wind Speed*

Vertical wind speed is assumed equal to zero.

j. *Horizontal Dispersion*

Six stability classes are used.

Rural dispersion coefficients from Turner (1969) are used, with adjustment for roughness length and averaging time.

Initial traffic-induced dispersion is handled implicitly by plume size parameters.

k. *Vertical Dispersion*

Six stability classes are used.
Empirical dispersion coefficients from Benson (1979) are used including an adjustment for roughness length.

Initial traffic-induced dispersion is handled implicitly by plume size parameters.
Adjustment for averaging time is included.

l. *Chemical Transformation*

Not treated.

m. *Physical Removal*

Optional deposition calculations are included.

n. *Evaluation Studies*

Bemis, G. R. et al., 1977. Air Pollution and Roadway Location, Design, and Operation—Project Overview. FHWA–CA–TL–7080–77–25, Federal Highway Administration, Washington, DC.

Cadle, S. H. et al., 1976. Results of the General Motors Sulfate Dispersion Experiment, GMR–2107. General Motors Research Laboratories, Warren, MI.

Dabberdt, W. F., 1975. Studies of Air Quality on and Near Highways, Project 2761. Stanford Research Institute, Menlo Park, CA.

A.3 CLIMATOLOGICAL DISPERSION MODEL (CDM 2.0)

References

Irwin, J. S., T. Chico, and J. Catalano, 1985. CDM 2.0-Climatological Dispersion Model—User's Guide. U.S. Environmental Protection Agency, Research Triangle Park, NC. (NTIS No. PB 86–136546)

Availability

This model is available as part of UNAMAP (Version 6). The computer code is available on magnetic tape from: Computer Products, National Technical Information Service, U.S. Department of Commerce, Springfield, VA 22161, Phone: (703) 487–4650.

Abstract

CDM is a climatological steady-state Gaussian plume model for determining long-term (seasonal or annual) arithmetic average pollutant concentrations at any ground-level receptor in an urban area.

a. *Recommendations for Regulatory Use*

CDM is appropriate for the following applications:
Point and area sources;
Urban areas;
Flat terrain;
Transport distances less than 50 kilometers;
Long term averages over one month to one year or longer.
The following option should be selected for regulatory applications:
Set the regulatory ''default option'' (NDEF=l) which automatically selects stack

tip downwash, final plume rise, buoyancy-induced dispersion (BID), and the appropriate wind profile exponents.

Enter ''O'' for pollutant half-life for all pollutants except for SO_2 in an urban setting. This entry results in no decay (infinite half-life) being calculated. For SO_2 in an urban setting, the pollutant half-life (in hours) should be set to 4.0.

b. *Input Requirements*

Source data: Location, average emissions rates and heights of emissions for point and area sources. Point source data requirements also include stack gas temperature, stack gas exit velocity, and stack inside diameter for plume rise calculations for point sources.

Meteorological data: Stability wind rose (STAR deck day/night version), average mixing height and wind speed in each stability category, and average air temperature.

Receptor data: Cartesian coordinates of each receptor.

c. *Output*

11Printed output includes:

Average concentrations for the period of the stability wind rose data (arithmetic mean only) at each receptor, and

Optional point and area concentration rose for each receptor.

d. *Type of Model*

CDM is a climatological Gaussian plume model.

e. *Pollutant Types*

CDM may be used to model primary pollutants. Settling and deposition are not treated.

f. *Source-Receptor Relationship*

CDM applies user-specified locations for all point sources and receptors.

Area sources are input as multiples of a user-defined unit area source grid size.

User specified release heights are applied for individual point sources and the area source grid.

Actual separation between each source-receptor pair is used.

The user may select a single height at or above ground level that applies to all receptors.

No terrain differences between source and receptor are treated.

g. *Plume Behavior*

CDM uses Briggs (1969, 1971, 1975) plume rise equations. Optionally a plume rise-wind speed product may be input for each point source.

Stack tip downwash equation from Briggs (1974) is preferred for regulatory use. The Bjorklund and Bowers (1982) equation is also included.

No plume rise is calculated for area sources.

Does not treat fumigation or building downwash.

h. *Horizontal Winds*

Wind data are input as a stability wind rose (joint frequency distribution of 16 wind directions, 6 wind classes, and 5 stability classes).

Wind speed profile exponents for the urban case (EPA, 1980) are used, assuming the anemometer height is at 10.0 meters.

i. *Vertical Wind Speed*

Vertical wind speed is assumed equal to zero.

j. *Horizontal Dispersion*

Pollutants are assumed evenly distributed across a 22.5 or 10.0 degree sector.

k. *Vertical Dispersion*

There are seven vertical dispersion parameter schemes, but the following is recommended for regulatory applications:

- Briggs-urban (Gifford, 1976).

Mixing height has no effect until dispersion coefficient equals 0.8 times the mixing height; uniform vertical mixing is assumed beyond that point.

Buoyancy-induced disperion (Pasquill, 1976) is included as an option. Perfect reflection is assumed at the ground.

l. *Chemical Transformation*

Chemical transformations are treated using exponential decay. Half-life is input by the user.

m. *Physical Removal*

Physical removal is not explicitly treated.

n. *Evaluation Studies*

Irwin, J. S., and T. M. Brown, 1985. A Sensitivity Analysis of the Treatment of Area Sources by the Climatological Dispersion Model. *Journal of Air Pollution Control Association*, 35: 359–364.

Londergan, R., D. Minott, D. Wachter and R. Fizz, 1983. Evaluation of Urban Air Quality Simulation Models, EPA Publication No. EPA–450/4–83–020. U.S. Environmental Protection Agency, Research Triangle Park, NC.

Busse, A. D. and J. R. Zimmerman, 1973. User's Guide for the Climatological Dispersion Model—Appendix E. EPA Publication No. EPA/R4–73–024. Office of Research and Development, Research Triangle Park, NC.

Zimmerman, J. R., 1971. Some Preliminary Results of Modeling from the Air Pollution Study of Ankara, Turkey, Proceedings of the Second Meeting of the Expert Panel on Air Pollution Modeling, NATO Committee on

the Challenges of Modern Society, Paris, France.

Zimmerman, J. R., 1972. The NATO/CCMS Air Pollution Study of St. Louis, Missouri. Presented at the Third Meeting of the Expert Panel on Air Pollution Modeling, NATO Committee on the Challenges of Modern Society, Paris, France.

A.4 GAUSSIAN-PLUME MULTIPLE SOURCE AIR QUALITY ALGORITHM (RAM)

Reference

Turner, D. B., and J. H. Novak, 1978. User's Guide for RAM. Publication No. EPA–600/8–78–016, Vol. a and b. U.S. Environmental Protection Agency, Research Triangle Park, NC. (NTIS Nos. PB 294791 and PB 294792)

Catalano, J. A., D. B. Turner, and H. Novak, 1987. User's Guide for RAM— Second Edition. U.S. Environmental Protection Agency, Research Triangle Park, NC. (Distributed as part of UNAMAP, Version 6), Documentation)

Availability

This model is available as part of UNAMAP (Version 6). The computer code is available on magnetic tape from: Computer Products, National Technical Information Service, U.S. Department of Commerce, Springfield, VA 22161, Phone: (703) 487–4650.

Abstract

RAM is a steady-state Gaussian plume model for estimating concentrations of relatively stable pollutants, for averaging times from an hour to a day, from point and area sources in a rural or urban setting. Level terrain is assumed. Calculations are performed for each hour.

a. *Recommendations for Regulatory Use*

RAM is appropriate for the following applications:

Point and area sources;

Urban areas;

Flat terrain;

Transport distances less than 50 kilometers; and

One hour to one year averaging times.

The following options should be selected for regulatory applications:

Set the regulatory ''default option'' to automatically select stack tip downwash, final plume rise, buoyancy-induced dispersion (BID), the new treatment for calms, the appropriate wind profile exponents, and the appropriate value for pollutant half-life.

b. *Input Requirements*

Source data: Point sources require location, emission rate, physical stack height, stack gas exit velocity, stack inside diameter and stack gas temperature. Area sources require location, size, emission rate, and height of emissions.

Meteorological data: Hourly surface weather data from the preprocessor program RAMMET which provides hourly stability class, wind direction, wind speed, temperature, and mixing height. Actual anemometer height (a single value) is also required.

Receptor data: Coordinates of each receptor. Options for automatic placement of receptors near expected concentration maxima, and a gridded receptor array are included.

c. *Output*

Printed output optionally includes:

One to 24-hour and annual average concentrations at each receptor,

Limited individual source contribution list, and

Highest through fifth highest concentrations at each receptor for period, with the highest and high, second-high values flagged.

d. *Type of Model*

RAM is a Gaussian plume model.

e. *Pollutant Types*

RAM may be used to model primary pollutants. Settling and deposition are not treated.

f. *Source-Receptor Relationship*

RAM applies user-specified locations for all point sources and receptors.

Area sources are input as multiples of a user-defined unit area source grid size.

User specified stack heights are applied for individual point sources. 1Up to 3 effective release heights may be specified for the area sources. Area source release heights are assumed to be appropriate for a 5 meter per second wind and to be inversely proportional to wind speed.

Actual separation between each source-receptor pair is used.

All receptors are assumed to be at the same height at or above ground level.

No terrain differences between source and receptor are accounted for.

g. *Plume Behavior*

RAM uses Briggs (1969, 1971, 1975) plume rise equations for final rise.

Stack tip downwash equation from Briggs (1974) is used.

A user supplied fraction of the area source height is treated as the physical height. The remainder is assumed to be plume rise for a 5 meter per second wind speed, and to be inversely proportional to wind speed.

Fumigation and building downwash are not treated.

h. *Horizontal Winds*

Constant, uniform (steady state) wind is assumed for an hour.

Straight line plume transport is assumed to all downwind distances.

Separate wind speed profile exponents (EPA, 1980) for urban cases are used.

i. *Vertical Wind Speed*

Vertical wind speed is assumed equal to zero.

j. *Horizontal Dispersion*

Urban dispersion coefficients from Briggs (Gifford, 1976) are used.

Buoyancy-induced dispersion (Pasquill, 1976) is included.

Six stability classes are used.

k. *Vertical Dispersion*

Urban dispersion coefficients from Briggs (Gifford, 1976) are used.

Buoyancy-induced dispersion (Pasquill, 1976) is included.

Six stability classes are used.

Mixing height is accounted for with multiple reflections until the vertical plume standard deviation equals 1.6 times the mixing height; uniform vertical mixing is assumed beyond that point.

Perfect reflection is assumed at the ground.

l. *Chemical Transformation*

Chemical transformations are treated using exponential decay. Half-life is input by the user.

m. *Physical Removal*

Physical removal is not explicitly treated.

n. *Evaluation Studies*

Ellis, H., P. Lou, and G. Dalzell, 1980. Comparison Study of Measured and Predicted Concentrations with the RAM Model at Two Power Plants Along Lake Erie, Second Joint Conference on Applications of Air Pollution Meteorology, New Orleans, LA.

Environmental Research and Technology, 1980. SO_2 Monitoring and RAM (Urban) Model Comparison Study in Summit County, Ohio. Document P–3618–152, Environmental Research & Technology, Inc., Concord, MA.

Guldberg, P. H., and C. W. Kern, 1978. A Comparison Validation of the RAM and PTMTP Models for Short-Term Concentrations in Two Urban Areas. *Journal of Air Pollution Control Association*, 28: 907–910.

Hodanbosi, R. R., and L. K. Peters, 1981. Evaluation of RAM Model for Cleveland, Ohio. *Journal of Air Pollution Control Association*, 31: 253–255.

Kennedy, K. H., R. D. Siegel, and M. P. Steinberg, 1981. Case-Specific Evaluation of the RAM Atmospheric Dispersion Model in an Urban Area, 74th Annual Meeting of the American Institute of Chemical Engineers, New Orleans, LA.

Kummier, R. H., B. Cho, G. Roginski, R. Sinha and A. Greenburg, 1979. A Comparative Validation of the RAM and Modified SAI Models for Short-Term SO_2 Concentrations in Detroit. *Journal of Air Pollution Control Association*, 29: 720–723.

Londergan, R. J., N. E. Bowne, D. R. Murray, H. Borenstein, and J. Mangano, 1980. An Evaluation of Short-Term Air Quality Models Using Tracer Study Data, Report No. 4333, American Petroleum Institute, Washington, D.C.

Morgenstern, P., M. J. Geraghty, and A. McKnight, 1979. A Comparative Study of the RAM (Urban) and RAMR (Rural) Models for Short-term SO_2 Concentrations in Metropolitan Indianapolis. 72nd Annual Meeting of the Air Pollution Control Association, Cincinnati, OH.

Ruff, R. E., 1980. Evaluation of the RAM Using the RAPS Data Base, Contract 68–02–2770, SRI International, Menlo Park, CA.

Londergan, R., D. Minott, D. Wackter, and R. Fizz, 1983. Evaluation of Urban Air Quality Simulation Models. EPA Publication No. EPA–450/4–83–020. U.S. Environmental Protection Agency, Research Triangle Park, NC.

A.5 INDUSTRIAL SOURCE COMPLEX MODEL (ISC3)

Reference

Environmental Protection Agency, 1995. User's Guide for the Industrial Source Complex (ISC3) Dispersion Models, Volumes 1 and 2. EPA Publication Nos. EPA–454/B–95–003a & b. Environmental Protection Agency, Research Triangle Park, NC. (NTIS Nos. PB–95–222741 and PB 95–222758, respectively)

Availability

The model code is available on the Support Center for Regulatory Air Models Bulletin Board System and also from the National Technical Information Service (see page A–1).

Abstract

The ISC3 model is a steady-state Gaussian plume model which can be used to assess pollutant concentrations from a wide variety of sources associated with an industrial source complex. This model can account for the following: Settling and dry deposition of particles; downwash; area, line and volume sources; plume rise as a function of downwind distance; separation of point sources; and limited terrain adjustment. It operates in both long-term and short-term modes.

a. *Recommendations for Regulatory Use*

ISC3 is appropriate for the following applications:

- Industrial source complexes;
- Rural or urban areas;
- Flat or rolling terrain;
- Transport distances less than 50 kilometers;
- 1-hour to annual averaging times; and
- Continuous toxic air emissions.

The following options should be selected for regulatory applications: 1For short term or long term modeling, set the regulatory ''default option''; i.e., use the keyword *DFAULT*, which automatically selects stack tip downwash, final plume rise, buoyancy induced dispersion (BID), the vertical potential temperature gradient, a treatment for calms, the appropriate wind profile exponents, the appropriate value for pollutant half-life, and a revised building wake effects algorithm; set the ''rural option'' (use the keyword *RURAL*) or ''urban option'' (use the keyword *URBAN*); and set the ''concentration option'' (use the keyword *CONC*).

b. *Input Requirements*

Source data: Location, emission rate, physical stack height, stack gas exit velocity, stack inside diameter, and stack gas temperature. Optional inputs include source elevation, building dimensions, particle size distribution with corresponding settling velocities, and surface reflection coefficients.

Meteorological data: ISCST3 requires hourly surface weather data from the preprocessor program RAMMET, which provides hourly stability class, wind direction, wind speed, temperature, and mixing height. For ISCST3, input includes stability wind rose (STAR deck), average afternoon mixing height, average morning mixing height, and average air temperature.

Receptor data: coordinates and optional ground elevation for each receptor.

c. *Output*

Printed output options include:

- Program control parameters, source data, and receptor data;
- Tables of hourly meteorological data for each specified day;
- ''N''-day average concentration or total deposition calculated at each receptor for any desired source combinations;
- Concentration or deposition values calculated for any desired source combinations at all receptors for any specified day or time period within the day;
- Tables of highest and second highest concentration or deposition values calculated at each receptor for each specified time period during a(n) ''N''-day period for any desired source combinations, and tables of the maximum 50 concentration or deposition values calculated for any desired source combinations for each specified time period.

d. *Type of Model*

ISC3 is a Gaussian plume model. It has been revised to perform a double integration of the Gaussian plume kernel for area sources.

e. *Pollutant Types*

ISC3 may be used to model primary pollutants and continuous releases of toxic and hazardous waste pollutants. Settling and deposition are treated.

f. *Source-Receptor Relationships*

ISC3 applies user-specified locations for point, line, area and volume sources, and user-specified receptor locations or receptor rings.

User input topographic evaluation for each receptor is used. Elevations above stack top are reduced to the stack top elevation, i.e., ''terrain chopping''.

User input height above ground level may be used when necessary to simulate impact at elevated or ''flag pole'' receptors, e.g., on buildings.

Actual separation between each source-receptor pair is used.

g. *Plume Behavior*

ISC3 uses Briggs (1969, 1971, 1975) plume rise equations for final rise.

Stack tip downwash equation from Briggs (1974) is used.

Revised building wake effects algorithm is used. For stacks higher than building height plus one-half the lesser of the building height or building width, the building wake algorithm of Huber and Snyder (1976) is used. For lower stacks, the building wake algorithm of Schulman and Scire (Schulman and Hanna, 1986) is used, but stack tip downwash and BID are not used.

For rolling terrain (terrain not above stack height), plume centerline is horizontal at height of final rise above source.

Fumigation is not treated.

h. *Horizontal Winds*

Constant, uniform (steady-state) wind is assumed for each hour.

Straight line plume transport is assumed to all downwind distances.

Separate wind speed profile exponents (EPA, 1980) for both rural and urban cases are used.

An optional treatment for calm winds is included for short term modeling.

i. *Vertical Wind Speed*

Vertical wind speed is assumed equal to zero.

j. *Horizontal Dispersion*

Rural dispersion coefficients from Turner (1969) are used, with no adjustments for surface roughness or averaging time.

Urban dispersion coefficients from Briggs (Gifford, 1976) are used.

Buoyancy induced dispersion (Pasquill, 1976) is included.

Six stability classes are used.

k. *Vertical Dispersion*

Rural dispersion coefficients from Turner (1969) are used, with no adjustments for surface roughness.

Urban dispersion coefficients from Briggs (Gifford, 1976) are used.

Buoyancy induced dispersion (Pasquill, 1976) is included.

Six stability classes are used.

Mixing height is accounted for with multiple reflections until the vertical plume standard deviation equals 1.6 times the mixing height; uniform vertical mixing is assumed beyond that point.

Perfect reflection is assumed at the ground.

l. *Chemical Transformation*

Chemical transformations are treated using exponential decay. Time constant is input by the user.

m. *Physical Removal*

Dry deposition effects for particles are treated using a resistance formulation in which the deposition velocity is the sum of the resistances to pollutant transfer within the surface layer of the atmosphere, plus a gravitational settling term (EPA, 1994), based on the modified surface depletion scheme of Horst (1983).

n. *Evaluation Studies*

Bowers, J. F., and A. J. Anderson, 1981. An Evaluation Study for the Industrial Source Complex (ISC) Dispersion Model, EPA Publication No. EPA–450/4–81–002. U.S. Environmental Protection Agency, Research Triangle Park, NC.

Bowers, J. F., A. J. Anderson, and W. R. Hargraves, 1982. Tests of the Industrial Source Complex (ISC) Dispersion Model at the Armco Middletown, Ohio Steel Mill, EPA Publication No. EPA–450/4–82–006. U.S. Environmental Protection Agency, Research Triangle Park, NC.

Environmental Protection Agency, 1992. Comparison of a Revised Area Source Algorithm for the Industrial Source Complex Short Term Model and Wind Tunnel Data. EPA Publication No. EPA–454/R–92–014. U.S. Environmental Protection Agency, Research Triangle Park, NC. (NTIS No. PB 93–226751)

Environmental Protection Agency, 1992. Sensitivity Analysis of a Revised Area Source Algorithm for the Industrial Source Complex Short Term Model. EPA Publication No. EPA–454/R–92–015. U.S. Environmental Protection Agency, Research Triangle Park, NC. (NTIS No. PB 93–226769)

Environmental Protection Agency, 1992. Development and Evaluation of a Revised Area Source Algorithm for the Industrial Source Complex Long Term Model. EPA Publication No. EPA–454/R–92–016. U.S. Environmental Protection Agency, Research Triangle Park, NC. (NTIS No. PB 93–226777)

Environmental Protection Agency, 1994. Development and Testing of a Dry Deposition Algorithm (Revised). EPA Publication No. EPA–454/R–94–015. U.S. Environmental Protection Agency, Research Triangle Park, NC. (NTIS No. PB 94–183100)

Scire, J. S., and L. L. Schulman, 1981. Evaluation of the BLP and ISC Models with SF_6 Tracer Data and SO_2 Measurements at Aluminum Reduction Plants. Air Pollution Control Association Specialty Conference on Dispersion Modeling for Complex Sources, St. Louis, MO.

Schulman, L. L., and S. R. Hanna, 1986. Evaluation of Downwash Modification to the Industrial Source Complex Model. Journal of the Air Pollution Control Association, 36: 258–264.

A.6 MULTIPLE POINT GAUSSIAN DISPERSION ALGORITHM WITH TERRAIN ADJUSTMENT (MPTER)

Reference

Pierce, Thomas D. and D. Bruce Turner, 1980. User's Guide for MPTER. EPA Publication No. EPA–600/8–80–016. U.S. Environmental Protection Agency, Research Triangle Park, NC. (NTIS No. PB 80–197361)

Chico, T. and J. A. Catalano, 1986. Addendum to the User's Guide for MPTER. U.S. Environmental Protection Agency. Research Triangle Park, NC 27711. (Distributed as part of UNAMAP. Version 6, Documentation)

Availability

This model is available as part of UNAMAP (Version 6). The computer code is available on magnetic tape from: Computer Products, National Technical Information Service, U.S. Department of Commerce, Springfield, VA 22161, Phone: (703) 487–4650.

Abstract

MPTER is a Multiple Point Source Algorithm. This algorithm is useful for estimating air quality concentrations of relatively non-reactive pollutants. Hourly estimates are made using the Gaussian steady state model.

a. *Recommendations for Regulatory Use*

MPTER is appropriate for the following applications:

Point sources;

Rural or urban areas;

Flat or rolling terrain (no terrain above stack height);

Transport distances less than 50 kilometers; and

One hour to one year averaging times.

The following options should be selected for regulatory applications:

Set the regulatory ''default option'' (IOPT(25)=l) to automatically select stack tip downwash, final plume rise, buoyancy-induced dispersion (BID), the new treatment for calms, and the appropriate wind profile exponents, and the appropriate value for pollutant half-life.

b. *Input Requirements*

Source data: Location, emission rate, physical stack height, stack gas exit velocity, stack inside diameter, stack gas temperature, and optional ground level elevation.

Meteorological data: hourly surface weather data from the preprocessor program RAMMET which provides hourly stability class, wind direction, wind speed, temperature, and mixing height. Actual anemometer height (a single value) is also required.

Receptor data: coordinates and optional ground elevation for each receptor.

c. *Output*

Printed output includes:

One to 24-hour and annual average concentrations at each receptor;

Highest through fifth highest concentrations at each receptor for period, with the highest and high, second-high values flagged; and

Limited source contribution table.

d. *Type of Model*

MPTER is a Gaussian plume model.

e. *Pollutant Types*

MPTER may be used to model primary pollutants. Settling and deposition are not treated.

f. *Source-Receptor Relationship*

MPTER applies user-specified locations of point sources and receptors.

User input stack height and source characteristics for each source are used.

User input topographic elevation for each receptor is used.

g. *Plume Behavior*

MPTER uses Briggs (1969, 1971, 1975) plume rise equations for final rise. Stack tip downwash equation from Briggs (1974) is used.

For rolling terrain (terrain not above stack height), plume centerline is horizontal at height of final rise above the source.

Fumigation and building downwash are not treated.

h. *Horizontal Winds*

Constant, uniform (steady-state) wind is assumed for an hour.

Straight line plume transport is assumed to all downwind distances.

Separate wind speed profile exponents (EPA, 1980) for both rural and urban cases are used.

i. *Vertical Wind Speed*

Vertical speed is assumed equal to zero.

j. *Horizontal Dispersion*

Rural dispersion coefficients from Turner (1969) are used with no adjustments made for variations in surface roughness or averaging times.

Urban dispersion coefficients from Briggs (Gifford, 1976) are used. Buoyancy-induced dispersion (Pasquill, 1976) is included.

Six stability classes are used.

k. *Vertical Dispersion*

Rural dispersion coefficients from Turner (1969) are used, with no adjustments made for variations in surface roughness.

Urban dispersion coefficients from Briggs (Gifford, 1976) are used.

Buoyancy-induced dispersion (Pasquill, 1976) is included.

Six stability classes are used.

Mixing height is accounted for with multiple reflections until the vertical plume standard deviation equals 1.6 times the mixing height; uniform vertical mixing is assumed beyond that point.

Perfect reflection is assumed at the ground.

l. *Chemical Transformation*

Chemical transformations are treated using exponential decay. Half-life is input by the user.

m. *Physical Removal*

Physical removal is not explicitly treated.

n. *Evaluation Studies*

No specific studies for MPTER because regulatory editions of CRSTER and MPTER are equivalent. Studies for CRSTER are relevant to MPTER as well (See page A–32).

A.7 SINGLE SOURCE (CRSTER) MODEL

Reference

Environmental Protection Agency, 1977. User's Manual for Single Source (CRSTER) Model. EPA Publication No. EPA–450/277–013.

U.S. Environmental Protection Agency, Research Triangle Park, NC. (NTIS No. PB 271360)

Catalano, J.A., 1986. Single Source (CRSTER) Model. Addendum to the User's Manual. U.S. Environmental Protection Agency, Research Triangle Park, NC 27711. (Distributed as part of UNAMAP, Version 6, Documentation)

Availability

This model is available as part of UNAMAP (Version 6). The computer code is available on magnetic tape from: Computer Products, National Technical Information Service, U.S. Department of Commerce, Springfield, VA 22161, Phone: (703) 487–4650.

Abstract

CRSTER is a steady state, Gaussian dispersion model designed to calculate concentrations from point sources at a single location in either a rural or urban setting. Highest and high-second high concentrations are calculated at each receptor for 1-hour, 3-hour, 24-hour, and annual averaging time.

a. *Recommendations for Regulatory Use*

CRSTER is appropriate for the following applications:

Single point sources;

Rural or urban areas;

Transport distances less than 50 kilometers; and

Flat or rolling terrain (no terrain above stack height).

The following options should be selected for regulatory applications:

Set the regulatory ''default option'' which automatically selects stack tip downwash, final plume rise, buoyancy-induced dispersion (BID), the new treatment for calms, and the appropriate wind profile exponents, and the appropriate value for pollutant half-life.

b. *Input Requirements*

Source data: Emission rate, physical stack height, stack gas exit velocity, stack inside diameter, and stack gas temperature.

Meteorological data: Hourly surface weather data from the preprocessor program RAMMET. Preprocessor output includes hourly stability class wind direction, wind speed, temperature, and mixing height. Actual anemometer height (a single value) is also required.

Receptor data: Require distance of each of the five receptor rings.

c. *Output*

Printed output includes:

Highest and second highest concentrations for the year at each receptor for averaging times of 1-, 3-, and 24 hours, plus a user-selected averaging time which may be 2, 4, 6, 8, or 12 hours;

Annual arithmetic average at each receptor;

For each day, the highest l-hour and 24-hour concentrations over the receptor field; and

Option for source contributions to concentrations at selected receptors.

d. *Type of Model*

CRSTER is a Gaussian plume model.

e. *Pollutant Types*

CRSTER may be used to model primary pollutants. Settling and deposition are not treated.

f. *Source-Receptor Relationship*

CRSTER treats up to 19 point sources, no area sources.

All point sources are assumed collocated.

User input stack height is used for each source.

User input topographic elevation is used for each receptor, but must be below top of stack or program will terminate execution.

Receptors are assumed at ground level.

g. *Plume Behavior*

CRSTER uses Briggs (1969, 1971, 1972) plume rise equations for final rise.

Stack tip downwash equation from Briggs (1974) is used.

For rolling terrain (terrain not above stack height), plume centerline is horizontal at height of final rise above the source.

Fumigation and building downwash are not treated.

h. *Horizontal Winds*

Constant, uniform (steady-state) wind is assumed for an hour.

Straight line plume transport is assumed to all downwind distances.

Separate set of wind speed profile exponents (EPA, 1980) for both rural and urban cases are used.

i. *Vertical Wind Speed*

Vertical wind speed is assumed equal to zero.

j. *Horizontal Dispersion*

Rural dispersion coefficients from Turner (1969) are used in CRSTER with no adjustments made for variations in surface roughness or averaging times.

Urban dispersion coefficients from Briggs (Gifford, 1976) are used. Buoyancy-induced dispersion (Pasquill, 1976) is included.

1Six stability classes are used.

k. *Vertical Dispersion*

Rural dispersion coefficients from Turner (1969) are used with no adjustments made for surface roughness.

Urban dispersion coefficients from Briggs (Gifford, 1975) are used. Buoyancy-induced dispersion (Pasquill, 1976) is included.

Six stability classes are used.

Mixing height is accounted for with multiple reflections until the vertical plume standard deviation equals 1.6 times the mixing height; uniform mixing is assumed beyond that point.

Perfect reflection is assumed at the ground.

l. *Chemical Transformation*

Chemical transformations are treated using exponential decay. Half-life is input by the user.

m. *Physical Removal*

Physical removal is not explicitly treated.

n. *Evaluation Studies*

Klug, W., 1974. Dispersion from Tall Stacks. Fifth NATO/CCMS International Technical Meeting on Air Pollution Modeling, Denmark.

Londergan, R. J., N. E. Bowne, D. R. Murray, H. Borenstein, and J. Mangano, 1980. An Evaluation of Short-Term Air Quality Models Using Tracer Study Data, Report No. 4333. American Petroleum Institute, Washington, DC.

Mills, M. T., R. Caiazza, D. D. Hergert, and D. A. Lynn, 1981. Evaluation of Point Source Dispersion Models. EPA Publication No. EPA–450/4–81–032. U.S. Environmental Protection Agency, Research Triangle Park, NC.

Mills, M. T., and F. A. Record, 1975. Comprehensive Analysis of Time Concentration Relationships and the Validation of a Single Source Dispersion Model. EPA Publication No. EPA–450/3–75–083. U.S. Environmental Protection Agency, Research Triangle Park, NC.

Mills, M. T., and R. W. Stern, 1975. Model Validation and Time-Concentration Analysis of Three Power Plants. EPA Publication No. EPA–450/376–002. U.S. Environmental Protection Agency, Research Triangle Park, NC.

Londergan, R., D. Minott, D. Wackter, T. Kincaid, and B. Bonitata, 1983. Evaluation of Rural Air Quality Simulation Models. EPA Publication No. EPA–450/4–83–033. U.S. Environmental Protection Agency, Research Triangle Park, NC.

TRC-Environmental Consultants, Inc., 1983. Overview, Results, and Conclusions for the EPRI Plume Model Validation and Development Project: Plains Site, EPRI EA–3074. Electric Power Research Institute, Palo Alto, CA.

A.8 URBAN AIRSHED MODEL (UAM)

References

Environmental Protection Agency, 1990. User's Guide for the Urban Airshed odel, Volumes I–VIII. EPA Publication Nos. EPA–450/4–90–007a–c, d(R), e–g; EPA–454/B–93–004, respectively. U.S. Environmental Protection Agency, Research Triangle Park, NC (NTIS Nos. PB 91–131227, PB 91–131235, PB 91–131243, PB 93–122380, PB 91–131268, PB 92–145382, and PB 92–224849, respectively, for Vols. I–VII).

Availability

The model code is available on the Support Center for Regulatory Air Models Bulletin Board System and also from the National Technical Information Service (see page A–1).

Abstract

UAM is an urban scale, three dimensional, grid type numerical simulation model. The model incorporates a condensed photochemical kinetics mechanism for urban atmospheres. The UAM is designed for computing ozone (O_3) concentrations under short-term, episodic conditions lasting one or two days resulting from emissions of oxides of nitrogen (NO_X), volatile organic compounds (VOC), and carbon monoxide (CO). The model treats urban VOC emissions as their carbon-bond surrogates.

a. *Recommendations for Regulatory Use*

UAM is appropriate for the following applications: Urban areas having significant ozone attainment problems and one hour averaging times.

UAM has many options but no specific recommendations can be made at this time on all options. The reviewing agency should be consulted on selection of options to be used in regulatory applications.

b. *Input Requirements*

Source data: Gridded, hourly emissions of PAR, OLE, ETH, XYL, TOL, ALD2, FORM, ISOR, ETOTH, MEOH, CO, NO, and NO_2 for low-level sources. For major elevated point sources, hourly emissions, stack height, stack diameter, exit velocity, and exit temperature.

Meteorological data: Hourly, gridded, divergence free, u and v wind components for each vertical level; hourly gridded mixing heights and surface temperatures; hourly exposure class; hourly vertical potential temperature gradient above and below the mixing height; hourly surface atmospheric pressure; hourly water mixing ratio; and gridded surface roughness lengths.

Air quality data: Concentration of all carbon bond 4 species at the beginning of the simulation for each grid cell; and hourly concentrations of each pollutant at each level along the inflow boundaries and top boundary of the modeling region.

Other data requirements are: Hourly mixed layer average, NO_2 photolysis rates; and ozone surface uptake resistance along with

associated gridded vegetation (scaling) factors.

c. *Output*

Printed output includes:

- Gridded instantaneous concentration fields at user-specified time intervals for user-specified pollutants and grid levels;
- Gridded time-average concentration fields for user-specified time intervals, pollutants, and grid levels.

d. *Type of Model*

UAM is a three dimensional, numerical, photochemical grid model.

e. *Pollutant Types*

UAM may be used to model ozone (O_3) formation from oxides of nitrogen (NO_x) and volatile organic compound (VOC) emissions.

f. *Source-Receptor Relationship*

Low-level area and point source emissions are specified within each surface grid cell. Emissions from major point sources are placed within cells aloft in accordance with calculated effective plume heights.

Hourly average concentrations of each pollutant are calculated for all grid cells at each vertical level.

g. *Plume Behavior*

Plume rise is calculated for major point sources using relationships recommended by Briggs (1971).

h. *Horizontal Winds*

See Input Requirements.

i. *Vertical Wind Speed*

Calculated at each vertical grid cell interface from the mass continuity relationship using the input gridded horizontal wind field.

j. *Horizontal Dispersion*

Horizontal eddy diffusivity is set to a user specified constant value (nominally 50 m^2/s).

k. *Vertical Dispersion*

Vertical eddy diffusivities for unstable and neutral conditions calculated using relationships of Lamb et al. (1977); for stable conditions, the relationship of Businger and Arya (1974) is employed. Stability class, friction velocity, and Monin-Obukhov length determined using procedure of Liu et al. (1976).

l. *Chemical Transformation*

UAM employs a simplified version of the Carbon-Bond IV Mechanism (CBM-IV) developed by Gery et al. (1988) employing various steady state approximations.

m. *Physical Removal*

Dry deposition of ozone and other pollutant species are calculated. Vegetation (scaling) factors are applied to the reference surface uptake resistance of each species depending on land use type.

n. *Evaluation Studies*

Builtjes, P.J.H., K.D. van der Hurt, and S.D. Reynolds, 1982. Evaluation of the Performance of a Photochemical Dispersion Model in Practical Applications, 13th International Technical Meeting on Air Pollution Modeling and Its Application, Ile des Embiez, France.

Cole, H.S., D.E. Layland, G.K. Moss, and C.F. Newberry, 1983. The St. Louis Ozone Modeling Project. EPA Publication No. EPA–450/4–83–019. U.S. Environmental Protection Agency, Research Triangle Park, NC.

Dennis, R.L., M.W. Downton, and R.S. Keil, 1983. Evaluation of Performance Measures for an Urban Photochemical Model. EPA Publication No. EPA–450/4–83–021. U.S. Environmental Protection Agency, Research Triangle Park, NC.

Haney, J.L. and T.N. Braverman, 1985. Evaluation and Application of the Urban Airshed Model in the Philadelphia Air Quality Control Region. EPA Publication No. EPA–450/4–85–003. U.S. Environmental Protection Agency, Research Triangle Park, NC.

Layland, D.E. and H.S. Cole, 1983. A Review of Recent Applications of the SAI Urban Airshed Model. EPA Publication No. EPA–450/4–84–004. U.S. Environmental Protection Agency, Research Triangle Park, NC.

Layland, D.E., S.D. Reynolds, H. Hogo and W.R. Oliver, 1983. Demonstration of Photochemical Grid Model Usage for Ozone Control Assessment. 76th Annual Meeting of the Air Pollution Control Association, Atlanta, GA.

Morris, R.E. et al., 1990. Urban Airshed Model Study of Five Cities. EPA Publication No. EPA–450/4–90–006a–g. U.S. Environmental Protection Agency, Research Triangle Park, NC.

Reynolds, S.D., H. Hogo, W.R. Oliver, L.E. Reid, 1982. Application of the SAI Airshed Model to the Tulsa Metropolitan Area, SAI No. 82004. Systems Applications, Inc., San Rafael, CA.

Schere, K.L. and J.H. Shreffler, 1982. Final Evaluation of Urban-Scale Photochemical Air Quality Simulation Models. EPA Publication No. EPA–600/3–82–094. U.S. Environmental Protection Agency, Research Triangle Park, NC.

Seigneur C., T.W. Tesche, C.E. Reid, P.M. Roth, W.R. Oliver, and J.C. Cassmassi, 1981. The Sensitivity of Complex Photochemical Model Estimates to Detail In Input Information, Appendix A—A Compilation of Simulation Results. EPA Publication No. EPA–450/

4–81–031b. U.S. Environmental Protection Agency, Research Triangle Park, NC.

South Coast Air Quality Management District, 1989. Air Quality Management Plan—Appendix V-R (Urban Airshed Model Performance Evaluation). El Monte, CA.

Stern, R. and B. Scherer, 1982. Simulation of a Photochemical Smog Episode in the Rhine-Ruhr Area with a Three Dimensional Grid Model. 13th International Technical Meeting on Air Pollution Modeling and Its Application, Ile des Embiez, France.

Tesche, T. W., C. Seigneur, L. E. Reid, P. M. Roth, W. R. Oliver, and J. C. Cassmassi, 1981. The Sensitivity of Complex Photochemical Model Estimates to Detail in Input Information. EPA Publication No. EPA–450/4–81–031a. U.S. Environmental Protection Agency, Research Triangle Park, NC.

Tesche, T. W., W. R. Oliver, H. Hogo, P. Saxeena and J. L. Haney, 1983. Volume IV—Assessment of NO_x Emission Control Requirements in the South Coast Air Basin—Appendix A. Performance Evaluation of the Systems Applications Airshed Model for the 26–27 June 1974 O_3 Episode in the South Coast Air Basin, SYSAPP 83/037. Systems Applications, Inc., San Rafael, CA.

Tesche, T. W., W. R. Oliver, H. Hogo, P. Saxeena and J. L. Haney, 1983. Volume IV—Assessment of NO_x Emission Control Requirements in the South Coast Air Basin—Appendix B. Performance Evaluation of the Systems Applications Airshed Model for the 7–8 November 1978 NO_2 Episode in the South Coast Air Basin, SYSAPP 83/038. Systems Applications, Inc., San Rafael, CA.

Tesche, T. W, 1988. Accuracy of Ozone Air Quality Models. Journal of Environmental Engineering, 114(4): 739–752.

A.9 Offshore and Coastal Dispersion Model (OCD)

Reference

DiCristofaro, D. C. and S. R. Hanna, 1989. OCD: The Offshore and Coastal Dispersion Model, Version 4. Volume I: User's Guide, and Volume II: Appendices. Sigma Research Corporation, Westford, MA. (NTIS Nos. PB 93–144384 and PB 93–144392)

Availability

This model code is available on the Support Center for Regulatory Air Models Bulletin Board System and also from the National Technical Information Service (see page A–1).

Technical Contact

Minerals Management Service, Attn: Mr. Dirk Herkoff, Parkway Atrium Building, 381 Elden Street, Herndon, VA 22070–4817, Phone: (703) 787–1735.

Abstract

OCD is a straight-line Gaussian model developed to determine the impact of offshore emissions from point, area or line sources on the air quality of coastal regions. OCD incorporates overwater plume transport and dispersion as well as changes that occur as the plume crosses the shoreline. Hourly meteorological data are needed from both offshore and onshore locations. These include water surface temperature, overwater air temperature, mixing height, and relative humidity.

Some of the key features include platform building downwash, partial plume penetration into elevated inversions, direct use of turbulence intensities for plume dispersion, interaction with the overland internal boundary layer, and continuous shoreline fumigation.

a. *Recommendations for Regulatory Use*

OCD has been recommended for use by the Minerals Management Service for emissions located on the Outer Continental Shelf (50 FR 12248; 28 March 1985). OCD is applicable for overwater sources where onshore receptors are below the lowest source height. Where onshore receptors are above the lowest source height, offshore plume transport and dispersion may be modeled on a case-by-case basis in consultation with the EPA Regional Office.

b. *Input Requirements*

Source data: Point, area or line source location, pollutant emission rate, building height, stack height, stack gas temperature, stack inside diameter, stack gas exit velocity, stack angle from vertical, elevation of stack base above water surface and gridded specification of the land/water surfaces. As an option, emission rate, stack gas exit velocity and temperature can be varied hourly.

Meteorological data (over water): Wind direction, wind speed, mixing height, relative humidity, air temperature, water surface temperature, vertical wind direction shear (optional), vertical temperature gradient (optional), turbulence intensities (optional).

Meteorological data (over land): Wind direction, wind speed, temperature, stability class, mixing height.

Receptor data: Location, height above local ground-level, ground-level elevation above the water surface.

c. *Output*

All input options, specification of sources, receptors and land/water map including locations of sources and receptors.

Summary tables of five highest concentrations at each receptor for each averaging period, and average concentration for entire run period at each receptor.

Optional case study printout with hourly plume and receptor characteristics. Optional

table of annual impact assessment from nonpermanent activities.

Concentration files written to disk or tape can be used by ANALYSIS postprocessor to produce the highest concentrations for each receptor, the cumulative frequency distributions for each receptor, the tabulation of all concentrations exceeding a given threshold, and the manipulation of hourly concentration files.

d. *Type of Model*

OCD is a Gaussian plume model constructed on the framework of the MPTER model.

e. *Pollutant Types*

OCD may be used to model primary pollutants. Settling and deposition are not treated.

f. *Source-Receptor Relationship*

Up to 250 point sources, 5 area sources, or 1 line source and 180 receptors may be used.

Receptors and sources are allowed at any location.

The coastal configuration is determined by a grid of up to 3600 rectangles. Each element of the grid is designated as either land or water to identify the coastline.

g. *Plume Behavior*

As in MPTER, the basic plume rise algorithms are based on Briggs' recommendations.

Momentum rise includes consideration of the stack angle from the vertical.

The effect of drilling platforms, ships, or any overwater obstructions near the source are used to decrease plume rise using a revised platform downwash algorithm based on laboratory experiments.

Partial plume penetration of elevated inversions is included using the suggestions of Briggs (1975) and Weil and Brower (1984).

Continuous shoreline fumigation is parameterized using the Turner method where complete vertical mixing through the thermal internal boundary layer (TIBL) occurs as soon as the plume intercepts the TIBL.

h. *Horizontal Winds*

Constant, uniform wind is assumed for each hour.

Overwater wind speed can be estimated from overland wind speed using relationship of Hsu (1981).

Wind speed profiles are estimated using similarity theory (Businger 1973). Surface layer fluxes for these formulas are calculated from bulk aerodynamic methods.

i. *Vertical Wind Speed*

Vertical wind speed is assumed equal to zero.

j. *Horizontal Dispersion*

Lateral turbulence intensity is recommended as a direct estimate of horizontal dispersion. If lateral turbulence intensity is not available, it is estimated from boundary layer theory. For wind speeds less than 8 m/s, lateral turbulence intensity is assumed inversely proportional to wind speed.

Horizontal dispersion may be enhanced because of obstructions near the source. A virtual source technique is used to simulate the initial plume dilution due to downwash.

Formulas recommended by Pasquill (1976) are used to calculate buoyant plume enhancement and wind direction shear enhancement.

At the water/land interface, the change to overland dispersion rates is modeled using a virtual source. The overland dispersion rates can be calculated from either lateral turbulence intensity or Pasquill-Gifford curves. The change is implemented where the plume intercepts the rising internal boundary layer.

k. *Vertical Dispersion*

Observed vertical turbulence intensity is not recommended as a direct estimate of vertical dispersion. Turbulence intensity should be estimated from boundary layer theory as default in the model. For very stable conditions, vertical dispersion is also a function of lapse rate.

Vertical dispersion may be enhanced because of obstructions near the source. A virtual source technique is used to simulate the initial plume dilution due to downwash.

Formulas recommended by Pasquill (1976) are used to calculate buoyant plume enhancement.

At the water/land interface, the change to overland dispersion rates is modeled using a virtual source. The overland dispersion rates can be calculated from either vertical turbulence intensity or the Pasquill-Gifford coefficients. The change is implemented where the plume intercepts the rising internal boundary layer.

l. *Chemical Transformation*

Chemical transformations are treated using exponential decay. Different rates can be specified by month and by day or night.

m. *Physical Removal*

Physical removal is also treated using exponential decay.

n. *Evaluation Studies*

DiCristofaro, D. C. and S. R. Hanna, 1989. OCD: The Offshore and Coastal Dispersion Model. Volume I: User's Guide. Sigma Research Corporation, Westford, MA.

Hanna, S. R. and D. C. DiCristofaro, 1988. Development and Evaluation of the OCD/API

Model. Final Report, API Pub. 4461, American Petroleum Institute, Washington, DC.

Hanna, S. R., L. L. Schulman, R. J. Paine and J. E. Pleim, 1984. The Offshore and Coastal Dispersion (OCD) Model User's Guide, Revised. OCS Study, MMS 84–0069. Environmental Research & Technology, Inc., Concord, MA. (NTIS No. PB 86–159803)

Hanna, S. R., L. L. Schulman, R. J. Paine, J. E. Pleim and M. Baer, 1985. Development and Evaluation of the Offshore and Coastal Dispersion (OCD) Model. Journal of the Air Pollution Control Association, 35: 1039–1047.

A.10 EMISSIONS AND DISPERSION MODELING SYSTEM (EDMS)

Reference

Segal, H. M., 1991. ''EDMS—Microcomputer Pollution Model for Civilian Airports and Air Force Bases: User's Guide.'' FAA Report No. FAA–EE–91–3; USAF Report No. ESL–TR–91–31, Federal Aviation Administration, 800 Independence Avenue, SW., Washington, DC 20591. (NTIS No. ADA 240528)

Segal, H. M., and Hamilton, P. L., 1988. ''A Microcomputer Pollution Model for Civilian Airports and Air Force Bases—Model Description.'' FAA Report No. FAA–EE–88–4; USAF Report No. ESL–TR–88–53, Federal Aviation Administration, 800 Independence Avenue, SW., Washington, DC 20591. (NTIS No. ADA 199003)

Segal, H. M., 1988. ''A Microcomputer Pollution Model for Civilian Airports and Air Force Bases—Model Application and Background.'' FAA Report No. FAA–EE–88–5; USAF Report No. ESL–TR–88–55, Federal Aviation Administration, 800 Independence Avenue, SW., Washington, DC 20591. (NTIS No. ADA 199794)

Availability

EDMS is available for $40 from the address listed below: Federal Aviation Administration, Attn: Mr. Howard Segal, AEE–120, 800 Independence Avenue, SW., Washington, DC 20591, Phone: (202) 267–3494.

Abstract

EDMS is a combined emissions/dispersion model for assessing pollution at civilian airports and military air bases. This model, which was jointly developed by the Federal Aviation Administration (FAA) and the United States Air Force (USAF), produces an emission inventory of all airport sources and calculates concentrations produced by these sources at specified receptors. The system stores emission factors for fixed sources such as fuel storage tanks and incinerators and also for mobile sources such as automobiles or aircraft. EDMS incorporates an emissions model to calculate an emission inventory for each airport source and a dispersion model, the Graphical Input Microcomputer Model (GIMM), (Segal, 1983) to calculate pollutant concentrations produced by these sources at specified receptors. The GIMM, which processes point, area, and line sources, also incorporates a special meteorological preprocessor for processing up to one year of National Climatic Data Center (NCDC) hourly data. The model operates in both a screening and refined mode, accepting up to 170 sources and 10 receptors.

a. *Recommendations for Regulatory Use*

EDMS is appropriate for the following applications:

- Cumulative effect of changes in aircraft operations, point source and mobile source emissions at airports or air bases;
- simple terrain;
- transport distances less than 50 kilometers; and
- 1-hour to annual averaging times.

b. *Input Requirements*

All data are entered through a ''runtime'' version of the Condor data base which is an integral part of EDMS. Typical entry items are source and receptor coordinates, percent cold starts, vehicles per hour, etc. Some point sources, such as heating plants, require stack height, stack diameter, and effluent temperature inputs.

Wind speed, wind direction, hourly temperature, and Pasquill-Gifford stability category (P–G) are the meteorological inputs. They can be entered manually through the EDMS data entry screens or automatically through the processing of previously loaded NCDC hourly data.

c. *Output*

Printed outputs consist of:

- A monthly and yearly emission inventory report for each source entered; and
- A concentration summing report for up to 8760 hours (one year) of data.

d. *Type of Model*

For its emissions inventory calculations, EDMS uses algorithms consistent with the EPA Compilation of Air Pollutant Emission Factors, AP–42. For its dispersion calculations, EDMS uses the GIMM model which is described in reports FAA–EE–88–4 and FAA–EE–88–5, referenced above. GIMM uses a Gaussian plume algorithm.

e. *Pollutant Types*

EDMS inventories and calculates the dispersion of carbon monoxide, nitrogen oxides, sulphur oxides, hydrocarbons, and suspended particles.

f. *Source-Receptor Relationship*

Up to 170 sources and 10 receptors can be treated simultaneously. Area sources are

treated as a series of lines that are positioned perpendicular to the wind.

Line sources (roadways, runways) are modeled as a series of points. Terrain elevation differences between sources and receptors are neglected.

Receptors are assumed to be at ground level.

g. *Plume Behavior*

Plume rise is calculated for all point sources (heating plants, incinerators, etc.) using Briggs plume rise equations (Catalano, 1986; Briggs, 1969; Briggs, 1971; Briggs, 1972).

Building and stack tip downwash effects are not treated.

Roadway dispersion employs a modification to the Gaussian plume algorithms as suggested by Rao and Keenan (1980) to account for close-in vehicle-induced turbulence.

h. *Horizontal Winds*

Steady state winds are assumed for each hour. Winds are assumed to be constant with altitude.

Winds are entered manually by the user or automatically by reading previously loaded NCC annual data files.

i. *Vertical Wind Speed*

Vertical wind speed is assumed to be zero.

j. *Horizontal Dispersion*

Four stability classes are used (P–G classes B through E).

Horizontal dispersion coefficients are computed using a table lookup and linear interpolation scheme. Coefficients are based on Pasquill (1976) as adapted by Petersen (1980).

A modified coefficient table is used to account for traffic-enhanced turbulence near roadways. Coefficients are based upon data included in Rao and Keenan (1980).

k. *Vertical Dispersion*

Four stability classes are used (P-G classes B through E).

Vertical dispersion coefficients are computed using a table lookup and linear interpolation scheme. Coefficients are based on Pasquill (1976) as adapted by Petersen (1980).

A modified coefficient table is used to account for traffic-enhanced turbulence near roadways. Coefficients are based upon data from Rao and Keenan (1980).

l. *Chemical Transformation*

Chemical transformations are not accounted for.

m. *Physical Removal*

Deposition is not treated.

n. *Evaluation Studies*

Segal, H. M. and P. L. Hamilton, 1988. A Microcomputer Pollution Model for Civilian Airports and Air Force Bases—Model Description. FAA Report No. FAA–EE–88–4; USAF Report No. ESL–TR–88–53, Federal Aviation Administration, 800 Independence Avenue, SW., Washington, DC 20591.

Segal, H. M., 1988. A Microcomputer Pollution Model for Civilian Airports and Air Force Bases—Model Application and Background. FAA Report No. FAA–EE–88–5; USAF Report No. ESL–TR–88–55, Federal Aviation Administration, 800 Independence Avenue, SW., Washington, DC 20591.

A.11 COMPLEX TERRAIN DISPERSION MODEL PLUS ALGORITHMS FOR UNSTABLE SITUATIONS (CTDMPLUS)

Reference

Perry, S. G., D. J. Burns, L. H. Adams, R. J. Paine, M. G. Dennis, M. T. Mills, D. G. Strimaitis, R. J. Yamartino and E. M. Insley, 1989. User's Guide to the Complex Terrain Dispersion Model Plus Algorithms for Unstable Situations (CTDMPLUS). Volume 1: Model Descriptions and User Instructions. EPA Publication No. EPA–600/8–89–041. Environmental Protection Agency, Research Triangle Park, NC. (NTIS No. PB 89–181424)

Paine, R. J., D. G. Strimaitis, M. G. Dennis, R. J. Yamartino, M. T. Mills and E. M. Insley, 1987. User's Guide to the Complex Terrain Dispersion Model, Volume 1. EPA Publication No. EPA–600/8–87–058a. U.S. Environmental Protection Agency, Research Triangle Park, NC. (NTIS No. PB 88–162169)

Availability

This model code is available on the Support Center for Regulatory Air Models Bulletin Board System and also from the National Technical Information Service (See page A–1).

Abstract

CTDMPLUS is a refined point source Gaussian air quality model for use in all stability conditions for complex terrain applications. It contains, in its entirety, the technology of CTDM for stable and neutral conditions. However, CTDMPLUS can also simulate daytime, unstable conditions, and has a number of additional capabilities for improved user friendliness. Its use of meteorological data and terrain information is different from other EPA models; considerable detail for both types of input data is required and is supplied by preprocessors specifically designed for CTDMPLUS. CTDMPLUS requires the parameterization of individual hill shapes using the terrain preprocessor and the association of each model receptor with a particular hill.

a. *Recommendation for Regulatory Use*

CTDMPLUS is appropriate for the following applications:

- Elevated point sources;
- Terrain elevations above stack top;
- Rural or urban areas;
- Transport distances less than 50 kilometers; and
- One hour to annual averaging times when used with a post-processor program such as CHAVG.

b. *Input Requirements*

Source data: For each source, user supplies source location, height, stack diameter, stack exit velocity, stack exit temperature, and emission rate; if variable emissions are appropriate, the user supplies hourly values for emission rate, stack exit velocity, and stack exit temperature.

Meteorological data: The user must supply hourly averaged values of wind, temperature and turbulence data for creation of the basic meteorological data file (''PROFILE''). Meteorological preprocessors then create a SURFACE data file (hourly values of mixed layer heights, surface friction velocity, Monin-Obukhov length and surface roughness length) and a RAWINsonde data file (upper air measurements of pressure, temperature, wind direction, and wind speed).

Receptor data: Receptor names (up to 400) and coordinates, and hill number (each receptor must have a hill number assigned).

Terrain data: User inputs digitized contour information to the terrain preprocessor which creates the TERRAIN data file (for up to 25 hills).

c. *Output*

When CTDMPLUS is run, it produces a concentration file, in either binary or text format (user's choice), and a list file containing a verification of model inputs, i.e.,

- Input meteorological data from ''SURFACE'' and ''PROFILE''
- Stack data for each source
- Terrain information
- Receptor information
- Source-receptor location (line printer map).

In addition, if the case-study option is selected, the listing includes:

- Meteorological variables at plume height
- Geometrical relationships between the source and the hill
- Plume characteristics at each receptor, i.e.,

‰ distance in along-flow and cross flow direction.

‰ effective plume-receptor height difference.

‰ effective σ_y & σ_z values, both flat terrain and hill induced (the difference shows the effect of the hill).

‰ concentration components due to WRAP, LIFT and FLAT.

If the user selects the TOPN option, a summary table of the top 4 concentrations at each receptor is given. If the ISOR option is selected, a source contribution table for every hour will be printed.

A separate disk file of predicted (1-hour only) concentrations (''CONC'') is written if the user chooses this option. Three forms of output are possible:

(1) A binary file of concentrations, one value for each receptor in the hourly sequence as run;

(2) A text file of concentrations, one value for each receptor in the hourly sequence as run; or

(3) A text file as described above, but with a listing of receptor information (names, positions, hill number) at the beginning of the file.

Hourly information provided to these files besides the concentrations themselves includes the year, month, day, and hour information as well as the receptor number with the highest concentration.

d. *Type of Model*

CTDMPLUS is a refined steady-state, point source plume model for use in all stability conditions for complex terrain applications.

e. *Pollutant Types*

CTDMPLUS may be used to model non-reactive, primary pollutants.

f. *Source-Receptor Relationship*

Up to 40 point sources, 400 receptors and 25 hills may be used. Receptors and sources are allowed at any location. Hill slopes are assumed not to exceed 15°, so that the linearized equation of motion for Bouissinesq flow are applicable. Receptors upwind of the impingement point, or those associated with any of the hills in the modeling domain, require separate treatment.

g. *Plume Behavior*

As in CTDM, the basic plume rise algorithms are based on Briggs' (1975) recommendations.

A central feature of CTDMPLUS for neutral/stable conditions is its use of a critical dividing-streamline height (H_c) to separate the flow in the vicinity of a hill into two separate layers. The plume component in the upper layer has sufficient kinetic energy to pass over the top of the hill while streamlines in the lower portion are constrained to flow in a horizontal plane around the hill. Two separate components of CTDMPLUS compute ground-level concentrations resulting from plume material in each of these flows.

The model calculates on an hourly (or appropriate steady averaging period) basis how

the plume trajectory (and, in stable/neutral conditions, the shape) is deformed by each hill. Hourly profiles of wind and temperature measurements are used by CTDMPLUS to compute plume rise, plume penetration (a formulation is included to handle penetration into elevated stable layers, based on Briggs (1984)), convective scaling parameters, the value of H_c, and the Froude number above H_c.

h. *Horizontal Winds*

CTDMPLUS does not simulate calm meteorological conditions. Both scalar and vector wind speed observations can be read by the model. If vector wind speed is unavailable, it is calculated from the scalar wind speed. The assignment of wind speed (either vector or scalar) at plume height is done by either:

- Interpolating between observations above and below the plume height, or
- Extrapolating (within the surface layer) from the nearest measurement height to the plume height.

i. *Vertical Wind Speed*

Vertical flow is treated for the plume component above the critical dividing streamline height (H_c); see ''Plume Behavior''.

j. *Horizontal Dispersion*

Horizontal dispersion for stable/neutral conditions is related to the turbulence velocity scale for lateral fluctuations, σ_v, for which a minimum value of 0.2 m/s is used. Convective scaling formulations are used to estimate horizontal dispersion for unstable conditions.

k. *Vertical Dispersion*

Direct estimates of vertical dispersion for stable/neutral conditions are based on observed vertical turbulence intensity, e.g., σ_w (standard deviation of the vertical velocity fluctuation). In simulating unstable (convective) conditions, CTDMPLUS relies on a skewed, bi-Gaussian probability density function (PDF) description of the vertical velocities to estimate the vertical distribution of pollutant concentration.

l. *Chemical Transformation*

Chemical transformation is not treated by CTDMPLUS.

m. *Physical Removal*

Physical removal is not treated by CTDMPLUS (complete reflection at the ground/hill surface is assumed).

n. *Evaluation Studies*

Burns, D. J., L. H. Adams and S. G. Perry, 1990. Testing and Evaluation of the CTDMPLUS Dispersion Model: Daytime Convective Conditions. Environmental Protection Agency, Research Triangle Park, NC.

Paumier, J. O., S. G. Perry and D. J. Burns, 1990. An Analysis of CTDMPLUS Model Predictions with the Lovett Power Plant Data Base. Environmental Protection Agency, Research Triangle Park, NC.

Paumier, J. O., S. G. Perry and D. J. Burns, 1992. CTDMPLUS: A Dispersion Model for Sources near Complex Topography. Part II: Performance Characteristics. Journal of Applied Meteorology, 31(7): 646–660.

A. REF REFERENCES

Benson, P. E., 1979. CALINE3—A Versatile Dispersion Model for Predicting Air Pollution Levels Near Highways and Arterial Streets. Interim Report, Report Number FHWA/CA/TL–79/23. Federal Highway Administration, Washington, D.C.

Briggs, G. A., 1969. Plume Rise. U.S. Atomic Energy Commission Critical Review Series, Oak Ridge National Laboratory, Oak Ridge, TN. (NTIS No. TID–25075)

Briggs, G. A., 1971. Some Recent Analyses of Plume Rise Observations. Proceedings of the Second International Clean Air Congress, edited by H. M. Englund and W. T. Berry. Academic Press, New York, NY.

Briggs, G. A., 1974. Diffusion Estimation for Small Emissions. USAEC Report ATDL–106. U.S. Atomic Energy Commission, Oak Ridge, TN.

Bjorklund, J. R., and J. F. Bowers, 1982. User's Instructions for the SHORTZ and LONGZ Computer Programs. EPA Publication No. EPA–903/9–82–004a and b. U.S. Environmental Protection Agency, Region III, Philadelphia, PA.

Businger, J. A., and S. P. Arya, 1974. Height of the Mixed Layer in the Stably Stratified Planetary Boundary Layer. Advances in Geophysics, Vol. 18A, F. N. Frankiel and R. E. Munn (Eds.), Academic Press, New York, NY.

Environmental Protection Agency, 1980. Recommendations on Modeling (October 1980 Meetings). Appendix G to: Summary of Comments and Responses on the October 1980 Proposed Revisions to the Guideline on Air Quality Models. Meteorology and Assessment Division, Office of Research and Development, Research Triangle Park, NC.

Gifford, F. A., Jr. 1976. Turbulent Diffusion Typing Schemes—A Review. Nuclear Safety, 17: 68–86.

Huber, A. H. and W. H. Snyder, 1976. Building Wake Effects on Short Stack Effluents. Third Symposium on Atmospheric Turbulence, Diffusion and Air Quality, American Meteorological Society, Boston, MA.

Irwin, J. S., 1979. A Theoretical Variation of the Wind Profile Power-Law Exponent as a Function of Surface Roughness and Stability. Atmospheric Environment, 13: 191–194.

Lamb, R. G. et al., 1977. Continued Research in Mesoscale Air Pollution Simulation Modeling—Vol. VI: Further Studies in the Modeling of Microscale Phenomena, Report Number EF77–143. Systems Applications, Inc., San Rafael, CA.

Larsen, R. I., 1971. A Mathematical Model for Relating Air Quality Measurements to Air Quality Standards. Office of Air Programs Publication No. AP–89. U.S. Environmental Protection Agency, Research Triangle Park, NC.

Liu, M. K. et al., 1976. The Chemistry, Dispersion, and Transport of Air Pollutants Emitted from Fossil Fuel Power Plants in California: Data Analysis and Emission Impact Model. Systems Applications, Inc., San Rafael, CA.

McElroy, J. L. and F. Pooler, Jr., 1968. St. Louis Dispersion Study Volume II-Analysis. NAPCA Publication No. AP–53. U.S. Environmental Protection Agency, Research Triangle Park, NC.

Moore, G. E., T. E. Stoeckenius and D. A. Stewart, 1982. A Survey of Statistical Measures of Model Performance and Accuracy for Several Air Quality Model. EPA Publication No. EPA–450/4–83–001. U.S. Environmental Protection Agency, Research Triangle Park, NC.

Pasquill, F., 1976. Atmospheric Dispersion Parameters in Gaussian Plume Modeling Part II. Possible Requirements for Change in the Turner Workbook Values. EPA Publication No. EPA–600/4–76–030b. U.S. Environmental Protection Agency, Research Triangle Park, NC.

Turner, D. B., 1969. Workbook of Atmospheric Dispersion Estimates. PHS Publication No. 999–26. U.S. Environmental Protection Agency, Research Triangle Park, NC.

Whitten, G. Z., J. P. Killus, and H. Hogo, 1980. Modeling of Simulated Photochemical Smog with Kinetic Mechanisms. Volume 1. Final Report. EPA Publication No. EPA–600/3–80–028a. U.S. Environmental Protection Agency, Research Triangle Park, NC.

Briggs, G. A., 1975. Plume Rise Predictions. Lectures on Air Pollution and Environmental Impact Analyses. American Meteorological Society, Boston, MA, pp. 59-111.

Businger, J. A., 1973. Turbulence Transfer in the Atmospheric Surface Layer. Workshop in Micrometeorology. American Meteorological Society, Boston, MA, pp. 67–100.

Deardorff, J. W. and G. E. Willis, 1982. Ground Level Concentrations Due to Fumigation into an Entraining Mixing Layer. Atmospheric Environment, 16: 1159-1170.

Hsu, S. A., 1981. Models for Estimating Offshore Winds from Onshore Meteorological Measurements. Boundary Layer Meteorology, 20:341–352.

Schulman, L. L., S. R. Hanna, and D. W. Heinold, 1985. Evaluation of Proposed Downwash Modifications to the Industrial Source Complex Model. ERT Document P–B810–012. Prepared for American Petroleum Institute.

Weil, J. C., and R. P. Brower, 1984. An Updated Gaussian Plume Model for Tall Stacks. Journal of the Air Pollution Control Association, 34: 818–827.

Catalano, J. A., 1986. Addendum to the User's Manual for the Single Source (CRSTER) Model. EPA Publication No. EPA–600/8–86–041. U.S. Environmental Protection Agency, Research Triangle Park, NC. (NTIS No. PB 87–145843)

Gery, M. W., G. Z. Whitten and J. P. Killus, 1988. Development and Testing of CBM–IV for Urban and Regional Modeling. EPA Publication No. EPA–600/3–88–012. U.S. Environmental Protection Agency, Research Triangle Park, NC. (NTIS No. PB 88–180039)

Petersen, W. B., 1980. User's Guide for HIWAY–2 A Highway Air Pollution Model. EPA Publication No. EPA–600/8–80–018. U.S. Environmental Protection Agency, Research Triangle Park, NC. (NTIS PB 80–227556)

Rao, T. R. and M. T. Keenan, 1980. Suggestions for Improvement of the EPA—HIWAY Model. Journal of the Air Pollution Control Association, 30: 247–256 (and reprinted as appendix C in Petersen, 1980).

Segal, H. M., 1983. Microcomputer Graphics in Atmospheric Dispersion Modeling. Journal of the Air Pollution Control Association, 23: 598–600.

Horst, T. W., 1983. A Correction to the Gaussian Source-depletion Model. In *Precipitation Scavenging, Dry Deposition and Resuspension*. H. R. Pruppacher, R. G. Semonin, and W. G. N. Slinn, eds., Elsevier, NY.

APPENDIX B TO APPENDIX W OF PART 51—SUMMARIES OF ALTERNATIVE AIR QUALITY MODELS

Table of Contents

B.0 Introduction and Availability
B.1 Air Quality Display Model (AQDM)
B.2 Air Resources Regional Pollution Assessment (ARRPA) Model
B.3 APRAC–3
B.4 COMPTER
B.5 ERT Air Quality Model (ERTAQ)—Deleted
B.6 ERT Visibility Model
B.7 Hiway–2
B.8 Integrated Model for Plumes and Atmospheric Chemistry in Complex Terrain (Impact)
B.9 LONGZ
B.10 Maryland Power Plant Siting Program (PPSP) Model
B.11 Mesoscale Puff Model (Mesopuff II)
B.12 Mesosale Transport Diffusion and Deposition Model for Industrial Sources (MTDDIS)
B.13 Models 3141 and 4141
B.14 MULTIMAX

B.15 Multiple Point Source Diffusion Model (MPSDM)—Deleted
B.16 Multi-Source (SCSTER) Model
B.17 Pacific Gas and Electric Plumes Model
B.18 PLMSTAR Air Quality Simulation Model
B.19 Plume Visibility Model (PLUVUE II)
B.20 Point, Area, Line Source Algorithm (PAL–DS)
B.21 Random Walk Advection and Dispersion Model (RADM)
B.22 Reactive Plume Model (RPM–II)
B.23 Regional Transport Model (RTM–II)
B.24 SHORTZ
B.25 Simple Line-Source Model (GMLINE)
B.26 Texas Climatological Model (TCM–2)
B.27 Texas Episodic Model (TEM–8)
B.28 AVACTA II
B.29 Shoreline Dispersion Model (SDM)
B.30 WYNDvalley Model
B.31 Dense Gas Dispersion Model (DEGADIS)
B.32 HGSYSTEM
B.33 SLAB
B.REF References

B.0 Introduction and Availability

This appendix summarizes key features of refined air quality models that may be considered on a case-by-case basis for individual regulatory applications. For each model, information is provided on availability, approximate cost in 1990, regulatory use, data input, output format and options, simulation of atmospheric physics and accuracy. The models are listed by name in alphabetical order.

There are three separate conditions under which these models will normally be approved for use: First, if a demonstration can be made that the model produces concentration estimates equivalent to the estimates obtained using a preferred model (e.g., the maximum or high, second-high concentration is within 2% of the estimate using the comparable preferred model); second, if a statistical performance evaluation has been conducted using measured air quality data and the results of that evaluation indicate the model in Appendix B performs better for the application than a comparable model in Appendix A; and third, if there is no preferred model for the specific application but a refined model is needed to satisfy regulatory requirements. Any one of these three separate conditions may warrant use of these models. See section 3.2, Use of Alternative Models, for additional details.

Many of these models have been subject to a performance evaluation by comparison with observed air quality data. A summary of such comparisons for models contained in this appendix is included in ''A Survey of Statistical Measures of Model Performance and Accuracy for Several Air Quality Models'', EPA–450/4–83–001. Where possible, several of the models contained herein have been subjected to rigorous evaluation exercises, including (1) statistical performance measures recommended by the American Meteorological Society and (2) peer scientific reviews.

Any availability statement for models in this appendix that refers to the User's Network for Applied Modeling of Air Pollution (UNAMAP) should be ignored since the UNAMAP is no longer operational. However, a source for some of these models and user's documentation is: Computer Products, National Technical Information Service (NTIS), U.S. Department of Commerce, Springfield, VA 22161, Phone: (703) 487–4650.

A number of the model codes and selected, abridged user's guides are also available from the Support Center for Regulatory Air Models Bulletin Board System[19] (SCRAM BBS), Telephone (919) 541–5742. The SCRAM BBS is an electronic bulletin board system designed to be user friendly and accessible from anywhere in the country. Model users with personal computers are encouraged to use the SCRAM BBS to download current model codes and text files.

B.1 Air Quality Display Model (AQDM)

Reference

TRW Systems Group, 1969. Air Quality Display Model. Prepared for National Air Pollution Control Administration, DHEW. U.S. Public Health Service, Washington, DC (NTIS No. PB 189194)

Availability

The above User's Guide is available from NTIS at a cost of $16.95. This model is available at no cost in the form of a punched card deck from: Library Services, MD–35, U.S. Environmental Protection Agency, Research Triangle Park, North Carolina 27711, Attn: Ann Ingram.

Abstract

AQDM is a climatological steady state Gaussian plume model that estimates annual arithmetic average sulfur dioxide and particulate concentrations at ground level in urban areas. A statistical model based on Larsen (1971) is used to transform the average concentration data from a limited number of receptors into expected geometric mean and maximum concentration values for several different averaging times.

a. *Recommendations for Regulatory Use*

AQDM can be used if it can be demonstrated to estimate concentrations equivalent to those provided by the preferred model for a given application. AQDM must be executed in the equivalent mode.

AQDM can be used on a case-by-case basis in lieu of a preferred model if it can be demonstrated, using the criteria in section 3.2,

that AQDM is more appropriate for the specific application. In this case the model options/modes which are most appropriate for the application should be used.

b. *Input Requirements*

Source data requirements are: Average emissions rates and heights of emissions for point and area sources; stack gas temperature, stack gas exit velocity, and stack inside diameter for plume rise calculations for point sources.

Meteorological data requirements are: Stability wind rose (STAR deck), average afternoon mixing height, average morning mixing height, and average air temperature.

Receptor data requirements are: number and locations of receptors. If the Larsen transform option is to be used to estimate short averaging time concentrations, measured standard geometric deviation of concentrations is required.

c. *Output*

Printed output includes:

One month to one year average concentrations (arithmetic mean only) at each receptor;

Optional arbitrary averaging time by Larsen (1971) procedure (typically l–24 hr); and

Optional individual point, area source culpability list for each receptor.

d. *Type of Model*

AQDM is a Gaussian plume model.

e. *Pollutant Types*

AQDM may be used to model non-reactive pollutants. Settling and deposition are not treated.

f. *Source Receptor Relationship*

AQDM applies user-specified locations and stack height for each point source.

AQDM uses any location and size for each area source.

Up to 225 receptors may be located on uniform rectangular grid.

Up to 12 user-specified receptor locations are permitted.

Unique release height is used for each point and area source. Receptors are assumed to be at ground level.

No terrain differences between source and receptor are treated.

g. *Plume Behavior*

AQDM uses Briggs (1969) plume rise formulas.

No plume rise is calculated for area sources.

Fumigation and downwash are not treated.

Zero concentration is assumed when plume height is greater than mixing height.

h. *Horizontal Winds*

Wind data are input as stability wind rose (joint frequency distribution) of 16 wind directions, six wind speed classes, and five stability classes.

No variation in wind speed with height is assumed.

Constant, uniform (steady-state) wind is assumed.

i. *Vertical Wind Speed*

Vertical wind speed is assumed equal to zero.

j. *Horizontal Dispersion*

Pollutants are assumed evenly distributed across a 22.5 degree sector.

Frequency of occurrence of a meteorological state is interpolated between sector center lines.

Averaging times from 1 month to 1 year or longer are treated.

k. *Vertical Dispersion*

Rural dispersion coefficients from Turner (1969) are used.

Five stability classes are as defined by Turner (1964). Stability classes E and F are combined, and assigned dispersion values equivalent to stability class D.

Neutral stability is split internally into 60% day, 40% night, with the two differing only in the treatment of mixing height.

Mixing height is a function of a single input afternoon mixing height, a single input morning mixing height, modified by the stability class.

l. *Chemical Transformations*

Not treated.

m. *Physical Removal*

Not treated.

n. *Evaluation Studies*

McNidar, R.R., 1977. Variability Analysis of Long-term Dispersion Models. Joint Conference on Applications of Air Pollution Meteorology, American Meteorology Society, 29 November–2 December, 1977, Salt Lake City, UT.

Turner, D.B., J.R. Zimmerman, and A.D. Busse, 1973. An Evaluation of Some Climatological Dispersion Models. In Appendix E, User's Guide to the Climatological Dispersion Model, EPA Publication No. EPA–R4–73–024, Environmental Protection Agency, Research Triangle Park, NC.

Londergan, R.J., D.H. Minott, D.J. Wachter and R.R. Fizz, 1983. Evaluation of Urban Air Quality Simulation Models. EPA Publication No. EPA–450/4–83–020. U.S. Environmental Protection Agency, Research Triangle Park, NC.

B.2 Air Resources Regional Pollution Assessment (ARRPA) Model

Reference

Mueller, S.F., R.J. Valente, T.L. Crawford, A.L. Sparks, and L.L. Gautney, Jr., 1983. Description of the Air Resources Regional Pollution Assessment (ARRPA) Model. TVA/ONR/AQB–83/14. Tennessee Valley Authority, Muscle Shoals, AL.

Availability

The computer code and sample input for this model on magnetic tape and a copy of the User's Guide are available from: Computer Services Development Branch, Office of Natural Resources and Economic Development, Tennessee Valley Authority, OSWHA, Muscle Shoals, AL 35660, Phone: (205) 386–2985.

A hard copy of the model output corresponding with the sample input is also available. The cost of copying model information to a buyer-supplied 2400-ft, high density tape is estimated to be about $100. The User's Guide is free of charge.

Abstract

The ARRPA model is a medium/long-range segmented-plume model. It is designed to compute air concentrations and surface dry mass deposition of sulfur dioxide and sulfate. A unique feature of the model is its use of prognostic meteorological output from the National Weather Service Boundary Layer Model (BLM). Boundary layer conditions are computed by the BLM on a grid with a spatial resolution of 80km, and are archived in intervals of 3 hours. BLM output used by this model includes three dimensional wind field components and potential temperature at 10 height levels from the surface through 2000m above the surface.

a. *Recommendations for Regulatory Use*

Use of the model for transport distances of less than 10km is not recommended. For 10km to beyond 50km, there is no specific recommendation at the present time. The model may be used on a case-by-case basis.

b. *Input Requirements*

Source data requirements: Location (latitude and longitude), stack height, stack diameter, stack gas exit velocity, stack gas temperature, SO_2 emission rate, SO_4= emission rate, stack base elevation.

Meteorological data requirements: Hourly wind field components (u,v,w), potential temperature (Θ), Pasquill-Gifford stability class and mixing height. These data are obtained as output from the BLM output preprocessing program called MDPP (Mueller and Valente, 1983). Required input to MDPP is BLM output (in three-hour intervals) of u, v, w, and Θ, surface layer friction velocity (u_*) and surface layer values of the inverse Monin-Obukhov length (L^{-1}).

Receptor data requirements: Gridded receptor array coordinates (x and y) and receptor heights (z) from a receptor preprocessing program called HEIGHT. HEIGHT produces a user-designed array of points which may be skewed up to ±90 degrees relative to the model x axis. The elevation of each receptor is adjusted to give height above smoothed model terrain. Non-gridded receptors can be specified using latitude/longitude coordinates.

c. *Output*

Printed output includes:

Listings of input parameters (except for meteorological data);

Listing of hours processed and flags for missing data periods.

Disk output: Parameters for controlling analysis and printout options in the postprocessing program called ANALYSIS; hourly SO_2 and SO_4= air concentrations and dry deposition amounts at each receptor.

Optional printed output: Two programs are available for displaying model output—DISPLAY and ANALYSIS; DISPLAY prints out hourly gridded concentration and/or deposition fields for user-specified time periods; ANALYSIS prints out (1) the five highest concentrations of SO_2 and/or SO_4= at each receptor for 1-hour, 3-hour (optional) and 24-hour (optional) averaging periods, (2) average SO_2 and/or SO_4 concentrations at each receptor for the entire analysis period and (3) gridded SO_2 and/or SO_4= dry deposition amounts for the day having the greatest dry deposition and for the entire analysis period.

d. *Type of Model*

The ARRPA model is a Gaussian segmented-plume model.

e. *Pollutant Types*

SO_2 and SO_4= are treated.

f. *Source-Receptor Relationship*

One source is treated per model run, though results from several sources may be superimposed.

Either constant or variable emission rates may be used.

Receptors (up to 100) in gridded network may have different elevations. Height of receptors above ground is variable.

g. *Plume Behavior*

Plume rise is computed in a piecewise-continuous manner through discrete model layers (Mueller, et al., 1983).

Plume can be isolated from the ground (lofting).

Plume height varies in time and space.

h. *Horizontal Winds*

Hourly horizontal wind components, specified at 80km intervals across the model grid, are spatially interpolated and vertically averaged through the plume depth to get plume transport vectors. A model option is available that uses the wind vector near the vertical plume center instead of computing a vertically-averaged vector.

i. *Vertical Wind Speed*

The mass-conserving BLM wind field used in this model provides vertical wind components that vary horizontally and vertically, and are used to adjust plume height.

j. *Horizontal Dispersion*

Plume half-width (σ_y) growth goes through four stages:

(1) Growth follows Turner curves for σ_y < 1000m;

(2) A transition in growth behavior from Turner curves to dynamical-statistical (Langevin) theory occurs for 1000m ≤ σ_y < 6000m;

(3) Growth is based on dynamical-statistical theory for σ_y > 6000m; eddy diffusivity computed from Pasquill-Gifford stability class;

(4) Growth approaches that described by Taylor's statistical theory (limit of dynamical-statistical theory for time much larger than the Lagrangian time correlation) for σ_y > 10,000m.

k. *Vertical Dispersion*

Plume half-depth (σ_z) growth is based on combination of Brookhaven curves for elevated plumes and Turner curves for near-ground plumes.

Vertical plume structure is Gaussian, with superimposed reflection terms, until σ_z becomes sufficiently large that a vertically uniform plume assumption is appropriate.

Maximum depth of a plume is 2000m.

l. *Chemical Transformation*

SO_2 oxidation to SO_4= is treated using a first-order chemical reaction rate constant which is parameterized to vary hourly following diurnal and seasonal cycles.

m. *Physical Removal*

Dry deposition is computed using the source depletion equation. Dry deposition velocities vary according to the stability of the surface layer.

n. *Evaluation Studies*

Muller, S. F. and L. W. Reisinger, 1986. Evaluation of the Air Resources Regional Pollution Assessment (ARRPA) Model. (Report in Progress).

B.3 APRAC–3

Reference

Simmon, P. B., R. M. Patterson, F. L. Ludwig, and L. B. Jones, 1981. The APRAC–3/Mobile 1 Emissions and Diffusion Modeling Package. EPA Publication No. EPA–909/9–81–002. U.S. Environmental Protection Agency, Region IX, San Francisco, CA. (NTIS No. PB 82–103763)

Availability

This model is available as part of UNAMAP (Version 6). The computer code is available on magnetic tape from: Computer Products, National Technical Information Service, U.S. Department of Commerce, Springfield, VA 22161, Phone: (703) 487–4650.

Abstract

APRAC–3 is a model which computes hourly average carbon monoxide concentrations for any urban location. The model calculates contributions from dispersion on various scales: extraurban, mainly from sources upwind of the city of interest; intraurban, from freeway, arterial, and feeder street sources; and local, from dispersion within a street canyon. APRAC–3 requires an extensive traffic inventory for the city of interest. APRAC–3, as it exists on UNAMAP (Version 6), has been updated with Mobile 2 emission factors.

a. *Recommendations for Regulatory Use*

APRAC–3 can be used if it can be demonstrated to estimate concentrations equivalent to those provided by the preferred model for a given application. APRAC–3 must be executed in the equivalent mode.

APRAC–3 can be used on a case-by-case basis in lieu of a preferred model if it can be demonstrated using the criteria in Section 3.2, that APRAC–3 is more appropriate for the specific application. In this case the model options/mode which are most appropriate for the application should be used.

Although the user's manual for APRAC–3 contains Mobile 1 emission factors, it is recommended that those emission factors be updated with the latest version of Mobile (Mobile Source Emissions Model) for use in regulatory applications.

b. *Input Requirements*

Source data requirements are: Line source (traffic link) end points, road type and daily traffic volume.

Meteorological data requirements are: Hourly wind direction (nearest 10 degrees), hourly wind speed, and hourly cloud cover for stability calculations.

Receptor data requirements are: Coordinates for up to 10 receptors for any single day and up to 8 receptors for the intersection submodel.

c. *Output*

Printed ouput includes:

Hourly calculations at each receptor.

d. *Type of Model*

APRAC–3 is a Gaussian plume model.

e. *Pollutant Types*

APRAC–3 may be used to model primary pollutants.

f. *Source-Receptor Relationship*

Traffic links may have arbitrary length and orientation. Off-link traffic is allocated to two-mile square grids. Link traffic emissions are aggregated into a receptor oriented area source array.

The boundaries of the area sources actually treated are (1) arcs at radial distances from the receptor which increase in geometric progression, (2) the sides of a 22.5° sector oriented upwind for distances greater than 1000m, and (3) the sides of a 45° sector oriented upwind for distances less than 1000m.

A similar area source array is established for each receptor.

Sources are assumed to be at ground level.

Up to 10 receptors are accepted for any single day.

Up to 625 receptors are accepted for a single-hour.

Up to 8 receptors are accepted for the intersection submodel.

Receptors are at ground level.

Receptor locations are arbitrary.

Four internally defined receptor locations on each user-designated street are used in a special street canyon sub-model.

A box model is used to estimate contribution from upwind sources beyond 32km based on wind speed, mixing height, annual fuel consumption.

In street canyon sub-model, contribution from other streets is included in background.

g. *Plume Behavior*

Plume rise is not treated.

Fumigation and downwash are not treated except in street canyon sub-model. In street canyon sub-model, a helical circulation pattern is assumed.

h. *Horizontal Winds*

User input hourly wind speed and direction in tens of degrees are used.

No variation of wind speed or direction with height is assumed.

Constant, uniform (steady-state) wind is assumed within each hour.

The model can interpolate winds at receptors if more than one wind is provided.

i. *Vertical Wind Speed*

Vertical wind speed is assumed equal to zero except in street canyon sub-model. Helical circulation assumed by street canyon sub-model.

j. *Horizontal Dispersion*

Sector averaging is used with uniform distribution within sectors. Sector size is 22.5 degrees beyond 1km and 45.0 degrees within 1km.

k. *Vertical Dispersion*

Six stability classes are used. Stability class is determined internally from user-supplied meteorological data modified from Turner (1964).

Dispersion coefficients are adapted from McElroy and Pooler (1968). No adjustments are made for variations in surface roughness.

Downwind distance variation of σ_z is assumed to be ax^b for purposes of doing analytical integration.

In street canyon sub-model, an empirical function of wind speed and street width and direction is used.

Perfect reflection at the surface is assumed.

Mixing height is ignored until concentration equals that calculated using box model. A box model (uniform vertical distribution) is used beyond that distance.

l. *Chemical Transformation*

Not treated.

m. *Physical Removal*

Not treated.

n. *Evaluation Studies*

Ludwig, F. L. and W. F. Dabberdt, 1972. Evaluation of the APRAC-lA Urban Dispersion Model for Carbon Dioxide, SRI Project 8563. Stanford Research Institute, Menlo Park, CA.

B.4 COMPTER

Reference

State of Alabama, 1980. COMPTER Model Users Guide. Alabama Department of Environmental Management, Air Division, Montgomery, AL.

Availability

This model is available to users for tape and reproduction charges. If a tape is sent, the reproduction is free. Send tape and desired format and specifications to: Mr. Richard E. Grusnick, Chief, Air Division, Alabama Department of Environmental Management, 1751 Federal Drive, Montgomery, AL 36109.

Abstract

COMPTER is based on the Gaussian steady-state technique applicable to both urban and rural areas. The model contains the following attributes: (a) Determines maximum 24-hour, 3-hour, 1-hour and variable hour concentrations for both block and running averages; (b) elevated terrain considered with the standard plume-chopping technique or stability dependent plume path trajectory; (c) uses annual hourly meteorological data in the CRSTER preprocessor format; (d) uses Pasquill-Gifford stability curves; (e) allows for stability class substitution in the stable categories. Typical model use is in rural areas with moderate to low terrain features.

a. *Recommendations for Regulatory Use*

COMPTER can be used if it can be demonstrated to estimate concentrations equivalent to those provided by the preferred model for a given application. COMPTER must be executed in the equivalent mode.

COMPTER can be used on a case-by-case basis in lieu of a preferred model if it can be demonstrated, using the criteria in section 3.2, that COMPTER is more appropriate for the specific application. In this case the model options/modes which are most appropriate for the application should be used.

b. *Input Requirements*

Source data requirements are: Annual or hourly values of emission rate, exit velocity, stack gas temperature, stack height, and stack diameter.

Meteorological data requirements are: Hourly surface weather data from the EPA meteorological preprocessor program. Preprocessor output includes hourly stability class wind direction, wind speed, temperature, and mixing height. Actual anemometer height (a single value) is optional.

Receptor data requirements are: Individual receptor coordinates; or a location and distance from the center of five rings of receptors; or a combination of individual receptors and either the rectangular grid or the rings of receptors. Elevations of all receptors may be input.

c. *Output*

Printed output includes:

Highest and second highest concentrations for the year at each receptor for averaging times of l, 3 and 24-hours, a user-selected averaging time which may be 2–12 hours (variable hourly), and a 50 high table for l, 3, variable hourly, and 24-hours;

Annual arithmetic average at each receptor; and the highest 1-hour and 24-hour concentrations over the receptor field for each day considered.

Computer readable output includes:

Hourly, 3-hourly, variable hourly, and 24-hourly concentrations for each receptor on magnetic storage device.

d. *Type of Model*

COMPTER is a Gaussian plume model.

e. *Pollutant Types*

COMPTER may be used to model primary pollutants. Settling and deposition are not treated.

f. *Source-Receptor Relationship*

A maximum 50 sources and 200 receptors are treated.

COMPTER applies user-specified locations of sources and receptors.

User input stack height and source characteristics for each source are applied.

User input topographic elevation for each receptor is applied.

Receptors are assumed to be at ground level.

g. *Plume Behavior*

Briggs' (1969, 1971, 1972) plume rise equations with limited mixing are used.

Plume height is adjustable according to stability with use of plume path coefficient.

h. *Horizontal Winds*

Constant, uniform (steady-state) wind is assumed for an hour.

Straight line plume transport is assumed to all downwind distances.

Power law wind profile exponents used are 0.10, 0.15, 0.20, 0.25, 0.30, and 0.30, for stability classes A through F, respectively. Anemometer height is assumed to be 10 meters.

i. *Vertical Wind Speed*

Vertical wind speeds are assumed equal to zero.

j. *Horizontal Dispersion*

Dispersion coefficients are from Turner (1969), with no further adjustments made for variations in surface roughness or averaging time.

Optionally, stability class 7 may be treated as Class 6.

Other options for stable class substitution include changing stabilities F and G to E, and reducing E, F, and G to D, E, and F, respectively.

k. *Vertical Dispersion*

Dispersion coefficients are from Turner (1969), with no further adjustments made for variations in surface roughness.

Optionally, by source, buoyancy induced dispersion ($\Delta H^2/10$) is included.

Optionally, stability class 7 may be treated as class 6.

Other options for stable class substitution include changing stabilities F and G to E; and reducing E, F, and G to D, E, and F, respectively.

l. *Chemical Transformation*

Not treated.

m. *Physical Removal*

Not treated.

n. *Evaluation Studies*

Londergan, R., D. Minott, D. Wackter, T. Kincaid and D. Bonitata, 1983. Evaluation of Rural Air Quality Simulation Models. EPA Publication No. EPA–450/4–83–003. U.S. Environmental Protection Agency, Research Triangle Park, NC.

B.5 ERT AIR QUALITY MODEL (ERTAQ)—[DELETED]

B.6 ERT VISIBILITY MODEL

Reference:

ENSR Consulting and Engineering, 1990. ERT Visibility Model: Version 4; Technical Description and User's Guide. Document M2020–003. ENSR Consulting and Engineering, 35 Nagog Park, Acton, MA 01720.

Availability

The user's guide and model code are available from the National Technical Information Service (see page B–1).

Abstract:

The ERT Visibility Model is a Gaussian dispersion model designed to estimate visibility impairment for arbitrary lines of sight due to isolated point source emissions by simulating gas-to-particle conversion, dry deposition, NO to NO_2 conversion and linear radiative transfer.

a. *Recommendations for Regulatory Use*

There is no specific recommendation at the present time. The ERT Visibility Model may be used on a case-by-case basis.

b. *Input Requirements*

Source data requirements are: Stack height, stack temperature, emissions of SO_2, NO_x, TSP, fraction of NO_x as NO_2, fraction of TSP which is carbonaceous, exit velocity, and exit radius.

Meteorological data requirements are: Hourly ambient temperature, mixing depth, wind speed at stack height, stability class, potential temperature gradient, and wind direction.

Receptor data requirements are: Observer coordinates with respect to source, latitude, longitude, time zone, date, time of day, elevation, relative humidity, background visual range, line-of-sight azimuth and elevation angle, inclination angle of the observed object, distance from observer to object, object and surface reflectivity, number and spacing of integral receptor points along line of sight.

Other data requirements are: Ambient concentrations of O_3 and NO_x, deposition velocity of TSP, sulfate, nitrate, SO_2 and NO_x, first-order transformation rate for sulfate and nitrate.

c. *Output*

Printed output includes both summary and detailed results as follows: Summary output: Page 1—site, observer and object parameters; page 2—optical pollutants and associated extinction coefficients; page 3—plume model input parameters; page 4—total calculated visual range reduction, and each pollutant's contribution; page 5—calculated plume contrast, object contrast and object contrast degradation at the 550nm wavelength; page 6—calculated blue/red ratio and ΔE (U*V*W*) values for both sky and object discoloration.

Detailed output: Phase functions for each pollutant in four wavelengths (400, 450, 550, 650nm), concentrations for each pollutant along sight path, solar geometry, contrast parameters at all wavelengths, intensities, tristimulus values and chromaticity coordinates for views of the object, sun, background sky and plume.

d. *Type of Model*

ERT Visibility model is a Gaussian plume model for estimating visibility impairment.

e. *Pollutant Types*

Optical activity of sulfate, nitrate (derived from SO_2 and NOx emissions), primary TSP and NO_2 is simulated.

f. *Source Receptor Relationship*

Single source and hour is simulated. Unlimited number of lines-of-sight (receptors) is permitted per model run.

g. *Plume Behavior*

Briggs (1971) plume rise equations for final rise are used.

h. *Horizontal Wind Field*

A single wind speed and direction is specified for each case study. The wind is assumed to be spatially uniform.

i. *Vertical Wind Speed*

Vertical wind speed is assumed equal to zero.

j. *Horizontal Dispersion*

Rural dispersion coefficients from Turner (1969) are used.

k. *Vertical Dispersion*

Rural dispersion coefficients from Turner (1969) are used. Mixing height is accounted for with multiple reflection handled by summation of series near the source, and Fourier representation farther downwind.

l. *Chemical Transformation*

First order transformations of sulfates and nitrates are used.

m. *Physical Removal*

Dry deposition is treated by the source depletion method.

n. *Evaluation Studies*

Seigneur, C., R. W. Bergstrom, and A. B. Hudischewskyj, 1982. Evaluation of the EPA PLUVUE Model and the ERT Visibility Model Based on the 1979 VISTTA Data Base, EPA Publication No. EPA–450/4–82–008. U.S. Environmental Protection Agency, Research Triangle Park, NC.

White, W. H., C. Seigneur, D. W. Heinold, M. W. Eltgroth, L. W. Richards, P. T. Roberts, P. S. Bhardwaja, W. D. Conner and W. E. Wilson, Jr., 1985. Predicting the Visibility of Chimney Plumes: An Inter-comparison of Four Models with Observations at a Well-Controlled Power Plant. Atmospheric Environment, 19: 515–528.

B.7 HIWAY–2

Reference

Petersen, W.B., 1980. User's Guide for HIWAY–2. EPA Publication No. EPA600/8–80–018. U.S. Environmental Protection Agency, ESRL, Research Triangle Park, NC. (NTIS No. PB 80–227556)

Availability

This model is available as part of UNAMAP (Version 6). The computer code is available on magnetic tape from: Computer Products, National Technical Information Service, U.S. Department of Commerce, Springfield, VA 22161, Phone: (703) 487–4650.

Abstract

HIWAY–2 can be used to estimate the concentrations of non-reactive pollutants from highway traffic. This steady-state Gaussian model can be applied to determine air pollution concentrations at receptor locations downwind of ''at-grade'' and ''cut section'' highways located in relatively uncomplicated terrain. The model is applicable for any wind direction, highway orientation, and receptor location. The model was developed for situations where horizontal wind flow dominates. The model cannot consider complex terrain or large obstructions to the flow such as buildings or large trees.

a. *Recommendations for Regulatory Use*

HIWAY–2 can be used if it can be demonstrated to estimate concentrations equivalent to those provided by the preferred model for a given application. HIWAY–2 must be executed in the equivalent mode.

HIWAY–2 can be used on a case-by-case basis in lieu of a preferred model if it can be demonstrated, using the criteria in Section 3.2, that HIWAY–2 is more appropriate for the specific application. In this case the model options/modes which are most appropriate for the application should be used.

b. *Input Requirements*

Source data requirements are: A uniform emission rate by lane, roadway end points; height of emission; length, width, and number of lanes; and width of center strip.

Meteorological data requirements are: One set at a time of hourly averages of wind speed, wind direction, and mixing height and the Pasquill-Gifford stability class. Wind speed and direction are preferred to be at 2 meters above ground.

Receptor data requirements are: Coordinates of each receptor.

c. *Output*

Printed output includes:

One hourly average concentration at each specified receptor location.

d. *Type of Model*

HIWAY–2 is a Gaussian plume model.

e. *Pollutant Types*

HIWAY–2 may be used to model primary pollutants. Settling and deposition are not treated.

f. *Source-Receptor Relationship*

HIWAY–2 applies user-specified end points for a single roadway segment, and user-specified receptor locations.

Plume impact on receptor is calculated by finite difference integration of a point source along each lane of the roadway.

g. *Plume Behavior*

HIWAY–2 does not treat plume rise.

h. *Horizontal Winds*

Constant, uniform (steady-state) wind is assumed for an hour.

Straight line plume transport is assumed to all downwind distances.

An aerodynamic drag factor is applied when winds are parallel to the roadway and speeds are less than 2 m/sec.

i. *Vertical Wind Speed*

Vertical wind speed is assumed equal to zero.

j. *Horizontal Dispersion*

The total horizontal dispersion is that due to ambient turbulence plus the turbulence generated by the vehicles on the roadway.

Beyond 300m downwind total turbulence is considered to be dominated by atmospheric turbulence, with plume dispersion as described by Turner (1969).

Three stability classes are considered: Unstable, neutral and stable.

k. *Vertical Dispersion*

The total horizontal dispersion is that due to ambient turbulence plus the turbulence generated by the vehicles on the roadway.

Beyond 300m downwind total turbulence is considered to be dominated by atmospheric turbulence, with plume dispersion as described by Turner (1969).

Mixing height is accounted for with multiple reflections until the vertical plume size equals 1.6 times the mixing height; uniform vertical mixing is assumed beyond that point.

Three stability classes are considered: Unstable, neutral and stable.

l. *Chemical Transformation*

Not treated.

m. *Physical Removal*

Not treated.

n. *Evaluation Studies*

Rao, S.T., and J.R. Visalli, 1981. On the Comparative Assessment of the Performance of Air Quality Models. *Journal of Air Pollution Control Association*, 31: 851–860.

B.8 INTEGRATED MODEL FOR PLUMES AND ATMOSPHERIC CHEMISTRY IN COMPLEX TERRAIN (IMPACT)

Reference

Fabrick, Allan J. and Peter J. Haas, 1980. User Guide to IMPACT: An Integrated Model for Plumes and Atmospheric Chemistry in Complex Terrain. DCN 80–241–403–01. Radian Corporation, 8501 Mo-Pac Blvd., Austin, TX.

Availability

A magnetic tape containing the IMPACT model, a set of test data and a copy of the IMPACT User's Guide are available for a cost of $500 from: Howard Balentine, Senior Meteorologist, Radian Corporation, Post Office Box 9948, Austin, TX 78766.

Abstract

IMPACT is an Eulerian, three-dimensional, finite difference grid model designed to calculate the impact of pollutants, either inert or reactive, in simple or complex terrain, emitted from either point or area sources. It automatically treats single or multiple point or area sources, the effects of vertical temperature stratifications on the wind and diffusion fields, shear flows caused by the atmospheric boundary layer or by terrain effects, and chemical transformations.

a. *Recommendations for Regulatory Use*

IMPACT can be used if it can be demonstrated to estimate concentrations equivalent to those provided by the preferred model for a given application. IMPACT must be executed in the equivalent mode.

IMPACT can be used on a case-by-case basis in lieu of a preferred model if it can be demonstrated, using the criteria in section 3.2, that IMPACT is more appropriate for the specific application. In this case the model options/modes which are most appropriate for the application should be used.

There is no specific recommendation concerning the use of IMPACT for photochemical applications. IMPACT may be used on a case-by-case basis.

b. *Input Requirements*

Source data requirements are: For point sources—location (I, J), stack height, exit temperature, volume flow rate or stack diameter and exit velocity, hourly emission rates for all pollutants; for area sources location of corners, and hourly emission rates for each pollutant.

Meteorological data requirements are: Hourly wind speed and direction, surface and elevated, from meteorological stations within and surrounding the modeling area, temperature, pressure, humidity and insolation (the three last variables are optional).

Receptor data requirements are: None since concentrations are output for cells in the computational grid.

Air quality data (optional): One or more vertical concentration profiles for each pollutant.

Other data: 2–D array of terrain heights, 2–D array of surface roughness values (optional).

c. *Output*

Printed output options include:

Surface and elevated horizontal cross sections of pollutant concentrations (instantaneous, or averages over N hours where N=1, 2, 3, . . .);

Horizontal cross sections of diffusivities and wind velocities; and

Arbitrary vertical and horizontal cross sections of pollutant concentrations and diffusivities, and CALCOMP wind field vector plots are generated by the POST postprocessor program.

Computer readable output includes:

Concentration, wind field and diffusivity data for each hour.

d. *Type of Model*

IMPACT is an Eulerian finite difference model.

e. *Pollutant Types*

IMPACT may be used to model any inert pollutant.

IMPACT may be used to model SO_2, $SO_4^=$, NO_x, NO_2, O_3, hydrocarbons (depends upon chemistry mechanism selected).

f. *Source-Receptor Relationship*

Up to 20 point sources and 20 area sources may be treated (greater number of sources may be treated by increasing common block storage allocation).

Concentrations are calculated at the center of each cell in the grid.

g. *Plume Behavior*

Briggs (1975) formulation for plume rise is used.

Elevated inversions are considered.

h. *Horizontal Winds*

A three dimensional stability and terrain dependent nondivergent wind field is interpolated from single or multiple wind data measurements using a Poisson technique.

i. *Vertical Wind Speed*

Vertical wind speed is treated at each wind site, user specified or extrapolated from surface data. Interpolated is accomplished as part of the three dimensional wind field interpolation.

j. *Horizontal Dispersion*

A three dimensional diffusivity field is calculated using either the technique of Myrup/Ranzieri or the DEPICT method (see User Guide, Fabrick and Haas, 1980).

k. *Vertical Dispersion*

A three dimensional diffusivity field is calculated using either the technique of Myrup/Ranzieri or the DEPICT method (see User Guide, Fabrick and Haas, 1980).

l. *Chemical Transformation*

Either 3-, 6-, 8- or 15-species mechanisms are currently available (see Use Guide). Calculations are also performed for inert pollutants.

m. *Physical Removal*

Physical removal is treated using exponential decay. Half-life is input by the user.

n. *Evaluation Studies*

Fabrick, A. J., R. Sklarew, and J. Wilson, 1977. Point Source Model Evaluation and Development Study. Report prepared for the California Air Resources Board.

Fabrick, A. J., and P. J. Haas, 1980. Analysis of Dispersion Models used for Complex Terrain Simulation. Presented at the Symposium on Intermediate Range Transport Processes and Technology Assessment, Gatlinburg, TN.

Sklarew, R., and V. Mirabella, 1979. Experience in IMPACT Modeling of Complex Terrain Fourth Symposium on Turbulence, Diffusion and Air Pollution, Reno, NV.

Sklarew, R., J. Wilson, A. J. Fabrick and V. Mirabella, 1976. Rough Terrain Modeling. Presented at Geothermal Environmental Seminar '76, Clear Lake, CA.

Sklarew, R., and K. Tran, 1978. The NEWEST Wind Field Model with Applications to Thermally Driven Drainage Wind in Mountainous Terrain. Presented at the AMS Meeting, Lake Tahoe, NV.

Wackter, D., and R. Londergan, 1984. Evaluation of Complex Terrain Air Quality Simulation Models. EPA Publication No. EPA–450/4–84–017. U.S. Environmental Protection Agency, Research Triangle Park, NC.

B.9 LONGZ

Reference

Bjorklund, J. R., and J. F. Bowers, 1982. User's Instructions for the SHORTZ and LONGZ Computer Programs, Volumes I and II, EPA Publication No. EPA–903/9–82–004. U.S. Environmental Protection Agency, Region III, Philadelphia, PA.

Availability

The model is available as part of UNAMAP (Version 6). The computer code is available on magnetic tape from: Computer Products, National Technical Information Service, U.S. Department of Commerce, Springfield, VA 22161, Phone: (703) 487–4650.

Abstract

LONGZ utilizes the steady-state univariate Gaussian plume formulation for both urban and rural areas in flat or complex terrain to calculate long-term (seasonal and/or annual) ground-level ambient air concentrations attributable to emissions from up to 14,000 arbitrarily placed sources (stacks, buildings and area sources). The output consists of the total concentration at each receptor due to emissions from each user-specified source or group of sources, including all sources. An option which considers losses due to deposition (see the description of SHORTZ) is deemed inappropriate by the authors for complex terrain, and is not discussed here.

a. *Recommendations for Regulatory Use*

LONGZ can be used if it can be demonstrated to estimate concentrations equivalent to those provided by the preferred model for a given application. LONGZ must be executed in the equivalent mode.

LONGZ can be used on a case-by-case basis in lieu of a preferred model if it can be demonstrated, using the criteria in section 3.2, that LONGZ is more appropriate for the specific application. In this case the model options/modes which are most appropriate for the application should be used.

b. *Input Requirements*

Source data requirements are: For point, building or area sources, location, elevation, total emission rate (optionally classified by gravitational settling velocity) and decay coefficient; for stack sources, stack height, effluent temperature, effluent exit velocity, stack radius (inner), emission rate, and ground elevation (optional);

For building sources, height, length and width, and orientation; for area sources, characteristic vertical dimension, and length, width and orientation.

Meteorological data requirements are: Wind speed and measurement height, wind profile exponents, wind direction standard deviations (turbulent intensities), mixing height, air temperature, vertical potential temperature gradient.

Receptor data requirements are: coordinates, ground elevation.

c. *Output*

Printed output includes:

Total concentration due to emissions from user-specified source groups, including the combined emissions from all sources (with optional allowance for depletion by deposition).

d. *Type of Model*

LONGZ is a climatological Gaussian plume model.

e. *Pollutant Types*

LONGZ may be used to model primary pollutants. Settling and deposition are treated.

f. *Source-Receptor Relationships*

LONGZ applies user specified locations for sources and receptors. Receptors are assumed to be at ground level.

g. *Plume Behavior*

Plume rise equations of Bjorklund and Bowers (1982) are used.

Stack tip downwash (Bjorklund and Bowers, 1982) is included.

All plumes move horizontally and will fully intercept elevated terrain.

Plumes above mixing height are ignored.

Perfect reflection at mixing height is assumed for plumes below the mixing height.

Plume rise is limited when the mean wind at stack height approaches or exceeds stack exit velocity.

Perfect reflection at ground is assumed for pollutants with no settling velocity.

Zero reflection at ground is assumed for pollutants with finite settling velocity.

LONGZ does not simulate fumigation.

Tilted plume is used for pollutants with settling velocity specified.

Buoyancy-induced dispersion is treated (Briggs, 1972).

h. *Horizontal Winds*

Wind field is homogeneous and steady-state.

Wind speed profile exponents are functions of both stability class and wind speed. Default values are specified in Bjorklund and Bowers (1982).

i. *Vertical Wind Speed*

Vertical wind speed is assumed equal to zero.

j. *Horizontal Dispersion*

Pollutants are initially uniformly distributed within each wind direction sector. A smoothing function is then used to remove discontinuities at sector boundaries.

k. *Vertical Dispersion*

Vertical dispersion is derived from input vertical turbulent intensities using adjustments to plume height and rate of plume growth with downwind distance specified in Bjorklund and Bowers (1982).

l. *Chemical Transformation*

Chemical transformations are treated using exponential decay. Time constant is input by the user.

m. *Physical Removal*

Gravitational settling and dry deposition of particulates are treated.

n. *Evaluation Studies*

Bjorklund, J. R., and J. F. Bowers, 1982. User's Instructions for the SHORTZ and LONGZ Computer Programs, Volume I and II. EPA Publication No. EPA–903/9–82–004. U.S. Environmental Protection Agency, Region III, Philadelphia, PA.

B.10 Maryland Power Plant Siting Program (PPSP) Model

References

Brower, R., 1982. The Maryland Power Plant Siting Program (PPSP) Air Quality Model User's Guide. Ref. No. PPSP–MP–38. Prepared for Maryland Department of Natural Resources, by Environmental Center, Martin Marietta Corporation, Baltimore, MD. (NTIS No. PB 82–238387)

Weil, J.C. and R.P. Brower, 1982. The Maryland PPSP Dispersion Model for Tall Stacks. Ref. No. PPSP–MP–36. Prepared for Maryland Department of Natural Resources, by

Environmental Center, Martin Marietta Corporation, Baltimore, MD. (NTIS No. PB 82–219155)

Availability

Two reports referenced above are available from NTIS. The model code and test data are available on MDgnetic tape for a cost of $210 from:

Power Plant Siting Program, Department of Natural Resources, Tawes State Office Building, Annapolis, MD 21401, Attn: Dr. Michael Hirshfield

Abstract

PPSP is a Gaussian dispersion model applicable to tall stacks in either rural or urban areas, but in terrain that is essentially flat (on a scale large compared to the ground roughness elements). The PPSP model follows the same general formulation and computer coding as CRSTER, also a Gaussian model, but it differs in four MDjor ways. The differences are in the scientific formulation of specific ingredients or ''sub-models'' to the Gaussian model, and are based on recent theoretical improvements as well as supporting experimental data. The differences are: (1) Stability during daytime is based on convective scaling instead of the Turner criteria; (2) Briggs' dispersion curves for elevated sources are used; (3) Briggs plume rise formulas for convective conditions are included; and (4) plume penetration of elevated stable layers is given by Briggs' (1984) model.

a. *Recommendations for Regulatory Use*

PPSP can be used if it can be demonstrated to estiMDte concentrations equivalent to those provided by the preferred model for a given application. PPSP must be executed in the equivalent mode.

PPSP can be used on a case-by-case basis in lieu of a preferred model if it can be demonstrated, using the criteria in section 3.2, that PPSP is more appropriate for the specific application. In this case the model options/modes which are most appropriate for the application should be used.

b. *Input Requirements*

Source data requirements are: Emission rate (monthly rates optional), physical stack height, stack gas exit velocity, stack inside diameter, stack gas temperature.

Meteorological data requirements are: Hourly surface weather data from the EPA meteorological preprocessor program. Preprocessor output includes hourly stability class, wind direction, wind speed, temperature, and mixing height. Actual anemometer height (a single value) is also required. Wind speed profile exponents (one for each stability class) are required if on-site data are input.

Receptor data requirements are: Distance of each of the five receptor rings.

c. *Output*

Printed output includes:

Highest and second highest concentrations for the year at each receptor for averaging times of 1, 3, and 24-hours, plus a user-selected averaging time which MDy be 2, 4, 6, 8, or 12 hours;

Annual arithmetic average at each receptor; and

For each day, the highest 1-hour and 24-hour concentrations over the receptor field.

d. *Type of Model*

PPSP is a Gaussian plume model.

e. *Pollutant Types*

PPSP may be used to model primary pollutants. Settling and deposition are not treated.

f. *Source-Receptor Relationship*

Up to 19 point sources are treated. 1All point sources are assumed at the same location.

Unique stack height and stack exit conditions are applied for each source.

Receptor locations are restricted to 36 azimuths (every 10 degrees) and five user-specified radial distances.

g. *Plume Behavior*

Briggs (1975) final rise formulas for buoyant plumes are used. Momentum rise is not considered.

Transitional or distance-dependent plume rise is not modeled.

Penetration (complete, partial, or zero) of elevated inversions is treated with Briggs (1984) model; ground-level concentrations are dependent on degree of plume penetration.

h. *Horizontal Winds*

Wind speeds are corrected for release height based on power law variation, with different exponents for different stability classes and variable reference height (7 meters is default). Wind speed power law exponents are 0.10, 0.15, 0.20, 0.25, 0.30, and 0.30 for stability classes A through F, respectively.

Constant, uniform (steady-state) wind assumed within each hour.

i. *Vertical Wind Speed*

Vertical wind speed is assumed equal to zero.

j. *Horizontal Dispersion*

Rural dispersion parameters are Briggs (Gifford, 1975), with stability class defined by u/w* during daytime, and by the method of Turner (1964) at night.

Urban dispersion is treated by changing all stable cases to stability class D.

Buoyancy-induced dispersion (Pasquill, 1976) is included (using ΔH/3.5).

k. *Vertical Dispersion*

Rural dispersion parameters are Briggs (Gifford, 1975), with stability class defined by u/w* during daytime, and by the method of Turner (1964).

Urban dispersion is treated by changing all stable cases to stability class D.

Buoyancy-induced dispersion (Pasquill, 1976) is included (using ΔH/3.5).

l. *Chemical Transformation*

Not treated.

m. *Physical Removal*

Not treated.

n. *Evaluation Studies*

Weil, J.C. and R.P. Brower, 1982. The Maryland PPSP dispersion model for tall stacks. Ref. No. PPSP MP–36. Prepared for Maryland Department of Natural Resources. Prepared by Environmental Center, Martin Marietta Corporation, Baltimore, Maryland, (NTIS No. PB 82–219155)

Londergan, R., D. Minott, D. Wackter, T. Kincaid, and D. Bonitata, 1983. Evaluation of Rural Air Quality Simulation Models, Appendix G: Statistical Tables for PPSP. EPA Publication No. EPA–450/4–83–003, Environmental Protection Agency, Research Triangle Park, NC.

B.11 MESOSCALE PUFF MODEL (MESOPUFF II)

Reference

Scire, J.S., F.W. Lurmann, A. Bass, S.R. Hanna, 1984. User's Guide to the Mesopuff II Model and Related Processor Programs. EPA Publication No. EPA–600/8–84–013. U.S. Environmental Protection Agency, Research Triangle Park, NC. (NTIS No. PB 84–181775)

A Modeling Protocol for Applying MESOPUFF II to Long Range Transport Problems, 1992. EPA Publication No. EPA–454/R–92–021. U.S. Environmental Protection Agency, Research Triangle Park, NC.

Availability

This model code is available on the Support Center for Regulatory Air Models Bulletin Board System and also from the National Technical Information Service (see page B–1).

Abstract

MESOPUFF II is a short term, regional scale puff model designed to calculate concentrations of up to 5 pollutant species (SO_2, SO_4, NO_X, HNO_3, NO_3). Transport, puff growth, chemical transformation, and wet and dry deposition are accounted for in the model.

a. *Recommendations for Regulatory Use*

There is no specific recommendation at the present time. The model may be used on a case-by-case basis.

b. *Input Requirements*

Required input data include four types: (1) Input control parameters and selected technical options, (2) hourly surface meteorological data and twice daily upper air measurements, hourly precipitation data are optional, (3) surface land use classification information, (4) source and emissions data.

Data from up to 25 surface National Weather Service stations and up to 10 upper air stations may be considered. Spatially variable fields at hour intervals of winds, mixing height, stability class, and relevant turbulence parameters are derived by MESOPAC II, the meteorological preprocessor program described in the User Guide.

Source and emission data for up to 25 point sources and/or up to 5 area sources can be included. Required information are: location in grid coordinates, stack height, exit velocity and temperature, and emission rates for the pollutant to be modeled.

Receptor data requirements: Up to a 40 X 40 grid may be used and non-gridded receptor locations may be considered.

c. *Output*

Line printer output includes: All input parameters, optionally selected arrays of ground-level concentrations of pollutant species at specified time intervals.

Line printer contour plots output from MESOFILE II post-processor program. Computer readable output of concentration array to disk/tape for each hour.

d. *Type of Model*

MESOPUFF II is a Gaussian puff superposition model.

e. *Pollutant types modeled*

Up to five pollutant species may be modeled simultaneously and include: SO_2, SO_4, NO_x, HNO_3, NO_3.

f. *Source-Receptor Relationship*

Up to 25 point sources and/or up to 5 area sources are permitted.

g. *Plume Behavior*

Briggs (1975) plume rise equations are used, including plume penetration with buoyancy flux computed in the model.

Fumigation of puffs is considered and may produce immediate mixing or multiple reflection calculations at user option.

h. *Horizontal Winds*

Gridded wind fields are computed for 2 layers; boundary layer and above the mixed layer. Upper air rawinsonde data and hourly surface winds are used to obtain spatially variable u,v component fields at hourly intervals. The gridded fields are computed by interpolation between stations in the MESOPAC II preprocessor.

i. *Vertical Wind Speed*

Vertical winds are assumed to be zero.

j. *Horizontal Dispersion*

Incremental puff growth is computed over discrete time steps with horizontal growth parameters determined from power law equations fit to sigma y curves of Turner out to 100km. At distances greater than 100km, puff growth is determined by the rate given by Heffter (1965).

Puff growth is a function of stability class and changes in stability are treated. Optionally, user input plume growth coefficients may be considered.

k. *Vertical Dispersion*

For puffs emitted at an effective stack height which is less than the mixing height, uniform mixing of the pollutant within the mixed layer is performed. For puffs centered above the mixing height, no effect at the ground occurs.

l. *Chemical Transformation*

Hourly chemical rate constants are computed from empirical expressions derived from photochemical model simulations.

m. *Physical Removal*

Dry deposition is treated with a resistance method.

Wet removal may be considered if hourly precipitation data are input.

n. *Evaluation Studies*

Results of tests for some model parameters are discussed in:

Scire, J. S., F. W. Lurmann, A. Bass, S. R. Hanna, 1984. Development of the MESOPUFF II Dispersion Model. EPA Publication No. EPA–600/3–84–057. U.S. Environmental Protection Agency, Research Triangle Park, NC.

B.12 Mesoscale Transport Diffusion and Deposition Model for Industrial Sources (MTDDIS)

Reference

Wang, I.T. and T.L. Waldron, 1980. User's Guide for MTDDIS Mesoscale Transport, Diffusion, and Deposition Model for Industrial Sources. EMSC6062.1UR(R2). Combustion Engineering, Newbury Park, CA.

Availability

A magnetic tape copy of the FORTRAN coding and the user's guide are available for a cost of $100 from: Dr. I.T. Wang, Combustion Engineering, Environmental Monitoring and Services, Inc., 2421 West Hillcrest Drive, Newbury Park, CA 19320.

Abstract

MTDDIS is a variable-trajectory Gaussian puff model applicable to long-range transport of point source emissions over level or rolling terrain. It can be used to determine 3-hour maximum and 24-hour average concentrations of relatively nonreactive pollutants from up to 10 separate stacks.

a. *Recommendations for Regulatory Use*

There is no specific recommendation at the present time. The MTDDIS Model may be used on a case-by-case basis.

b. *Input Requirements*

Source data requirements are: Emission rate, physical stack height, stack gas exit velocity, stack inside diameter, stack gas temperature, and location.

Meteorological data requirements are: Hourly surface weather data, from up to 10 stations, including cloud ceiling, wind direction, wind speed, temperature, opaque cloud cover and precipitation. For long-range applications, user-analyzed daily mixing heights are recommended. If these are not available, the NWS daily mixing heights will be used by the program. A single upper air sounding station for the region is assumed. For each model run, air trajectories are generated for a 48-hour period, and therefore, the afternoon mixing height of the day before and the mixing heights of the day after are also required by the model as input, in order to generate hourly mixing heights for the modeled period.

Receptor data requirements are: Up to three user-specified rectangular grids.

c. *Output*

Printed output includes:

Tabulations of hourly meteorological parameters include both input surface observations and calculated hourly stability classes and mixing heights for each station;

Printed air trajectories for the two consecutive 24-hour periods for air parcels generated 4 hours apart starting at 0000 LST; and

3-hour maximum and 24-hour average grid concentrations over user-specified rectangular grids are output for the second 24-hour period.

d. *Type of Model*

MTDDIS is a Gaussian puff model.

e. *Pollutant Types*

MTDDIS can be used to model primary pollutants. Dry deposition is treated. Exponential decay can account for some reactions.

f. *Source-Receptor Relationship*

MTDDIS treats up to 10 point sources.

Up to three rectangular receptor grids may be specified by the user.

g. *Plume Behavior*

Briggs (1971, 1972) plume rise formulas are used.

If plume height exceeds mixing height, ground level concentration is assumed zero.

Fumigation and downwash are not treated.

h. *Horizontal Winds*

Wind speeds and wind directions at each station are first corrected for release height. Speed conversions are based on power law variation and direction conversions are based on linear height dependence as recommended by Irwin (1979).

Converted wind speeds and wind directions are then weighted according to the algorithms of Heffter (1980) to calculate the effective transport wind speed and direction.

i. *Vertical Wind Field*

Vertical wind speed is assumed equal to zero.

j. *Horizontal Dispersion*

Transport-time-dependent dispersion coefficients from Heffter (1980) are used.

k. *Vertical Dispersion*

Transport-time-dependent dispersion coefficients from Heffter (1980) are used.

l. *Chemical Transformation*

Chemical transformations are treated using exponential decay. Half-life is input by the user.

m. *Physical Removal*

Dry deposition is treated. User input deposition velocity is required.

Wet deposition is treated. User input hourly precipitation rate and precipitation layer depth or cloud ceiling height are required.

n. *Evaluation Studies*

None cited.

B.13 MODELS 3141 AND 4141

Reference

Enviroplan, Inc, 1981. User's Manual for Enviroplan's Model 3141 and Model 4141. Enviroplan, Inc., West Orange, NJ.

Availability

A magnetic tape copy of the FORTRAN coding and the user's guide are available for a cost of $1,900 from: Environplan, Inc., 59 Main Street, West Orange, NJ 07052.

Abstract

Models 3141 and 4141 are modifications of CRSTER (UNAMAP VERSION 3) and are applicable to complex terrain particularly where receptor elevation approximately equals or exceeds the stack top elevation. The model utilizes intermediate ground displacement procedures and dispersion enhancements developed from an aerial tracer study and ground level concentrations measured for a power plant located in complex terrain.

a. *Recommendations for Regulatory Use*

3141 or 4141 can be used if it can be demonstrated to estimate concentrations equivalent to those provided by the preferred model for a given application. 3141 or 4141 must be executed in the equivalent mode.

3141 or 4141 can be used on a case-by-case basis in lieu of a preferred model if it can be demonstrated, using the criteria in Section 3.2, that 3141 or 4141 is more appropriate for the specific application. In this case the model options/modes which are most appropriate for the application should be used.

b. *Input Requirements*

Source data requirements are: Emission rate, physical stack height, stack gas exit velocity, stack inside diameter, stack gas exit temperature.

Meteorological data requirements are: Hourly surface weather data from the EPA meteorological preprocessor program. Preprocessor output includes hourly stability class, wind direction, wind speed, temperature, and mixing height. Actual anemometer height (a single value) is also required. Wind speed profile exponents (one for each stability class) are required if on-site data are input.

Receptor data requirements are: Distance of each of five receptor rings, and receptor elevation.

c. *Output*

Printed output includes:

Highest and second highest concentrations for the year at each receptor for averaging times of 1, 3, and 24 hours, plus a user-selected averaging time which may be 2, 4, 6, 8, or 12 hours.

Annual arithmetic average at each receptor.

For each day, the highest 1-hour and 24-hour concentrations over the receptor field.

d. *Type of Model*

3141 and 4141 are Gaussian plume models.

e. *Pollutant Types*

3141 and 4141 may be used to model non-reactive pollutants. Settling and deposition are not treated.

f. *Source-Receptor Relationship*

Up to 19 point sources are treated.

No area sources are treated.

All point sources are assumed to be collocated.

Unique stack height is used for each source.

Receptor locations are restricted to 36 azimuths (every 10 degrees) and 5 user-specified radial distances.

Unique topographic elevation is used for each receptor.

g. *Plume Behavior*

Briggs (1969, 1971, 1972) final plume rise formulas are used.

If plume height exceeds mixing height at a receptor location after terrain adjustment, concentration is assumed equal to zero.

h. *Horizontal Winds*

Wind speeds are corrected for release height based on power law variation exponents from DeMarrais (1959), different exponents for different stability classes, reference height=7 meters. Exponents used are 0.10, 0.15, 0.20, 0.25, 0.30, and 0.30 for stability classes A through F, respectively.

Constant, uniform (steady-state) wind is assumed within each hour.

i. *Vertical Wind Speed*

Vertical wind speed is assumed equal to zero.

j. *Horizontal Dispersion*

Dispersion coefficients are Pasquill-Gifford coefficients from Turner (1969).

Dispersion is adjusted to 60 minute averaging time by one-fifth power rule (Gifford, 1975).

Buoyancy-induced dispersion (Briggs, 1975) is included.

k. *Vertical Dispersion*

Dispersion coefficients are Pasquill-Gifford coefficients from Turner (1969).

Buoyancy-induced dispersion (Briggs, 1975) is included.

l. *Chemical Transformation*

Not treated.

m. *Physical Removal*

Not treated.

n. *Evaluation Studies*

Ellis, H.M., P.C. Liu, and C. Runyon, 1979. ''Comparison of Predicted and Measured Concentrations for 54 Alternative Models of Plume Transport in Complex Terrain, Presented in APCA Annual Conference, Cincinnati, OH.

Ellis, H.M., P.C. Liu, and C. Runyon, 1980. Comparison of Predicted and Measured Concentrations for 58 Alternative Models of Plume Transport in Complex Terrain. *Journal of the Air Pollution Control Association*, 30(6): 670–675.

Londergan, R., D. Minott, D. Wachter, T. Kincaid and D. Bonitata. Evaluation of Rural Air Quality Simulation Models. EPA Publication No. EPA–450/4–83–003, Environmental Protection Agency, Research Triangle Park, NC.

Wackter, D., and R. Londergan, 1984. Evaluation of Complex Terrain Air Quality Simulation Models. EPA Publication No. EPA–450/4–84–017. U.S. Environmental Protection Agency, Research Triangle Park, NC.

B.14 MULTIMAX

Reference

Moser, J.H., 1979. MULTIMAX: An Air Dispersion Modeling Program for Multiple Sources, Receptors, and Concentration Averages. Shell Development Company, Westhollow Research Center, P.O. Box 1380, Houston, TX. (NTIS No. PB 80–170178).

Availability

The above report is available from NTIS ($16.95 for paper copy; $5.95 on microfiche). The accession number for the computer tape for MULTIMAX is PB 80–170160, and the cost is $370.00. Requests should be sent to: Computer Products, National Technical Information Service, U.S. Department of Commerce, 5825 Port Royal Road, Springfield, VA 22161, Phone: (703) 487–4650.

Abstract

MULTIMAX is a Gaussian plume model applicable to both urban and rural areas. It can be used to calculate highest and second-highest concentrations, for each of several averaging times due to up to 100 sources arbitrarily located.

a. *Recommendations for Regulatory Use*

MULTIMAX can be used if it can be demonstrated to estimate concentrations equivalent to those provided by the preferred model for a given application. MULTIMAX must be executed in the equivalent mode.

MULTIMAX can be used on a case-by-case basis in lieu of a preferred model if it can be demonstrated, using the criteria in section 3.2, that MULTIMAX is more appropriate for the specific application. In this case the

model options/modes which are most appropriate for the application should be used.

b. *Input Requirements*

Source data requirements are: Emission rate, physical stack height, stack gas exit velocity, stack inside diameter, and stack gas temperature.

Meteorological data requirements are: Hourly surface weather data from the EPA meteorological preprocessor program. Preprocessor output includes hourly stability class, wind direction, wind speed, temperature, and mixing height. Actual anemometer height (a single value) is also required. Wind speed profile exponents (one for each stability class) are required if on-site data are input.

Receptor requirements are: Individual receptor points, arcs and circles of receptors, or lines of receptors may be input, with receptor point locations, receptor line end points, and receptor circle center and radius defined in either cartesian or polar coordinates.

c. *Output*

Printed output includes: Highest and second-highest concentrations for the year at each receptor for averaging time of 1, 3, and 24 hours. Annual arithmetic average at each receptor.

Computer readable output includes: Input data and results.

d. *Type of Model*

MULTIMAX is a Gaussian plume model.

e. *Pollutant Types*

MULTIMAX may be used to model primary pollutants. Settling and deposition are not treated.

f. *Source-Receptor Relationship*

Up to 100 point sources at any location may be input.

Area sources are not treated.

Point sources may be at any location.

Unique stack height is used for each source.

Unique topographic elevation is used for each receptor; must be below top of stack.

Receptors can be defined individually, or along lines or arcs.

g. *Plume Behavior*

MULTIMAX uses Briggs (1969, 1971, 1972) final plume rise formulas.

If plume height exceeds mixing height, concentrations downwind are assumed equal to zero.

h. *Horizontal Winds*

Wind speeds are corrected for release height based on power law variation exponents from DeMarrais (1959), different exponents for different stability classes, reference height=10 meters. The exponents are 0.10, 0.15, 0.20, 0.25, 0.30, and 0.30 for stability classes A through F, respectively.

Constant, uniform (steady-state) wind is assumed within each hour.

i. *Vertical Wind Speed*

Vertical wind speed is assumed equal to zero.

j. *Horizontal Dispersion*

Rural dispersion coefficients from Turner (1969) are used in MULTIMAX with no adjustments made for variations in surface roughness.

Six stability classes are used, with Turner class 7 treated as Class 6. Averaging time adjustment is optional.

k. *Vertical Dispersion*

Rural dispersion coefficients from Turner (1969) are used in MULTIMAX with no adjustments made for variations in surface roughness.

Six stability classes are used, with Turner class 7 treated as Class 6.

Perfect reflection at the ground is assumed.

Mixing height is accounted for with multiple reflections until the vertical plume size equals 1.6 times the mixing height; uniform mixing is assumed beyond that point.

l. *Chemical Transformation*

Not treated.

m. *Physical Removal*

Not treated.

n. *Evaluation Studies*

Londergan, R., D. Minott, D. Wackter, T. Kincaid, and D. Bonitata, 1983. Evaluation of Rural Air Quality Simulation Models. EPA Publication No. EPA–450/4–83–003. U.S. Environmental Protection Agency, Research Triangle Park, NC.

B.15 MULTIPLE POINT SOURCE DIFFUSION MODEL (MPSDM—[DELETED]

B.16 MULTI-SOURCE (SCSTER) MODEL

Reference

Malik, M.H. and B. Baldwin, 1980. Program Documentation for Multi-Source (SCSTER) Model. Program Documentation EN7408SS. Southern Company Services, Inc., Technical Engineering Systems, 64 Perimeter Center East, Atlanta, GA.

Availability

The SCSTER model and user's manual are available at no charge to a limited number

of persons through Southern Company Services. A magnetic tape must be provided by those desiring the model. Requests should be directed to: Mr. Bryan Baldwin, Research Program Supervisor, Air Quality Program, Southern Company Services, Post Office Box 2625, Birmingham, AL 35202.

Abstract

SCSTER is a modified version of the EPA CRSTER model. The primary distinctions of SCSTER are its capability to consider multiple sources that are not necessarily collocated, its enhanced receptor specifications, its variable plume height terrain adjustment procedures and plume distortion from directional wind shear.

a. *Recommendations for Regulatory Use*

SCSTER can be used if it can be demonstrated to estimate concentrations equivalent to those provided by the preferred model for a given application. SCSTER must be executed in the equivalent mode.

SCSTER can be used on a case-by-case basis in lieu of a preferred model if it can be demonstrated, using the criteria in section 3.2, that SCSTER is more appropriate for the specific application. In this case the model options/modes which are most appropriate for the application should be used.

b. *Input Requirements*

Source data requirements are: Emission rate, stack gas exit velocity, stack gas temperature, stack exit diameter, physical stack height, elevation of stack base, and coordinates of stack location. The variable emission data can be monthly or annual averages.

Meteorological data requirements are: Hourly surface weather data from the EPA meteorological preprocessor program. Preprocessor output includes hourly stability class wind direction, wind speed, temperature, and mixing height. Actual anemometer height (a single value) is optional. Wind speed profile exponents (one for each stability class) are optional.

Receptor data requirements are: Cartesian coordinates and elevations of individual receptors; distances of receptor rings, with elevation of each receptor; receptor grid networks, with elevation of each receptor.

Any combination of the three receptor input types may be used to consider up to 600 receptor locations.

c. *Output*

Printed output includes:

Highest and second highest concentrations for the year at each receptor for averaging times of 1-, 3-, and 24-hours, a user-selected averaging time which may be 2–12 hours, and a 50 high table for 1-, 3-, and 24-hours.

Annual arithmetic average at each receptor; and the highest 1-hour and 24-hour concentrations over the receptor field for each day considered.

Optional tables of source contributions of individual point sources at up to 20 receptor locations for each averaging period.

Optional magnetic tape output in either binary or fixed block format includes: All 1-hour concentrations.

Optional card/disk output includes for each receptor: Receptor coordinates; receptor elevation; highest and highest, second-highest, l-, 3-, and 24-hour concentrations; and annual average concentration.

d. *Type of Model*

SCSTER is a Gaussian plume model.

e. *Pollutant Types*

SCSTER may be used to model primary pollutants. Settling and deposition are not treated.

f. *Source-Receptor Relationship*

SCSTER can handle up to 60 separate stacks at varying locations and up to 600 receptors, including up to 15 receptor rings.

User input topographic elevation for each receptor is used.

g. *Plume Behavior*

SCSTER uses Briggs (1969, 1971, 1972) final plume rise formulas. Transitional plume rise is optional.

SCSTER contains options to incorporate wind directional shear with a plume distortion method described in Appendix A of the User's Guide.

SCSTER provides four terrain adjustments including the CRSTER full terrain height adjustment and a user-input, stability-dependent plume path coefficient adjustment for receptors above stack height.

h. *Horizontal Winds*

Wind speeds are corrected for release height based on power law exponents from DeMarrais (1959), different exponents for different stability classes; default reference height of 7m. Default exponents are 0.10, 0.15, 0.20, 0.25, 0.30, and 0.30 for stability classes A through F, respectively.

Steady-state wind is assumed within a given hour.

Optional consideration of plume distortion due to user-input, stability-dependent wind-direction shear gradients.

i. *Vertical Wind Speed*

Vertical wind speed is assumed equal to zero.

j. *Horizontal Dispersion*

Rural dispersion coefficients from Turner (1969) are used.

Six stability classes are used.

k. *Vertical Dispersion*

Rural dispersion coefficients from Turner (1969) are used.

Six stability classes are used.

An optional test for plume height above mixing height before terrain adjustment is included.

l. *Chemical Transformation*

Chemical transformations are treated using exponential decay. Half-life is input by the user.

m. *Physical Removal*

Physical removal is treated using exponential decay. Half-life is input by the user.

n. *Evaluation Studies*

Londergan, R., D. Minott, D. Wackter, T. Kincaid and D. Bonitata, 1983. Evaluation of Rural Air Quality Simulation Models. EPA Publication No. EPA–450/4–83–003. U.S. Environmental Protection Agency, Research Triangle Park, NC.

B.17 PACIFIC GAS AND ELECTRIC PLUME5 MODEL

Reference

User's Manual for Pacific Gas and Electric PLUME5 Model, 1981. Pacific Gas and Electric Company, San Francisco, CA.

Availability

The User's Manual will be supplied for cost of reproduction. An IBM version of the model can be obtained on a user supplied tape free of charge from: Mr. Robert N. Swanson, Pacific Gas and Electric Company, 245 Market Street, Rm. 451, San Francisco, CA 94106.

Abstract

PLUME5 is a steady-state Gaussian plume model applicable to both rural and urban areas in uneven terrain. Pollutant concentrations at 500 receptors from up to 10 sources with up to 15 stacks each can be calculated using up to 5 meteorological inputs. The model in its ''basic'' mode is similar to CRSTER and MPTER. Several options are available that allow better simulation of atmospheric conditions and improved model outputs. These options allow plume rise into or through a stable layer and crosswind spread of the plume by wind directional shear with height, initial plume expansion, mean (advective) wind speed, terrain considerations, and chemical transformation of pollutants.

Differences that exist between PLUME5 and CRSTER are in the following areas: Stability class determination, hourly mixing height schemes, hourly stable layer data, randomization of wind direction, extent of data set required for preprocessing meteorological data inputs.

a. *Recommendations for Regulatory Use*

PLUME5 can be used if it can be demonstrated to estimate concentrations equivalent to those provided by the preferred model for a given application. PLUME5 must be executed in the equivalent mode.

PLUME5 can be used on a case-by-case basis in lieu of a preferred model if it can be demonstrated, using the criteria in section 3.2, that PLUME5 is more appropriate for the specific application. In this case the model options/modes which are most appropriate for the application should be used.

b. *Input Requirements*

Source data requirements are: Cartesian or polar coordinates of each source with stack height, diameter, gas temperature, and exit velocity for each stack.

Meteorological data requirements are: Surface data—hourly meteorological data including wind direction, wind speed, temperature, and either ceiling height and total sky cover or sigma A or Delta T depending on how stability is computed; stable layer data—either NCC data or site specific user supplied data.

Receptor data requirements are: Cartesian or polar coordinates of each receptor.

c. *Output*

Printed output includes:

Highest and second highest concentrations for the year printed out at each receptor for averaging times of 1, 3, and 24-hours, plus a user-selected averaging time which may be 2, 4, 6, 8, or 12 hours.

Annual arithmetic average at each receptor.

For each day, the highest 1-hour and 24-hour concentrations over the receptor field are printed.

Hourly effective stack height and effective stack height distributions.

Vertical profiles of maximum pollutant concentrations above a designated height (Z_o) for the data period processed.

Cumulative number of exceedances of 1 hour and 24-hour specified values for all receptors during the entire meteorological data period. These specified values will normally be National and State Ambient Air Quality Standards.

Computer readable output includes:

Hourly concentrations for each receptor on magnetic tape.

Computer file for input to plotting routine. The file stores the highest 1-hour (or other

specified time period) concentration at each receptor for the entire meteorological data period for input into a user supplied plotting routine.

d. *Type of Model*

PLUME5 is a Gaussian plume model.

e. *Pollutant Types*

PLUME5 may be used to model primary pollutants. Chemical transformations of pollutants are treated by exponential decay and/or ozone limiting procedures.

f. *Source-Receptor Relationship*

Can input up to 10 separate sources with up to 15 stacks per source.

Unique stack height for each source. Rectangular or circular receptor locations (up to 500) can be either model generated or user input.

Terrain considerations:

When plume rise, H, is above the stable layer top concentration estimates will only be calculated for receptors at or above the stable layer top. If the receptor is below the stable layer top, then the concentration is zero.

When plume rise falls within the stable layer, concerntration estimates will be only caluclated for receptors located within this region. If the receptor height is above or below the stable top, then the concentration is zero.

When plume rise falls below the stable layer and the receptor height is above the stable layer base, then the concentration is zero. If the receptor height is below the stable layer base, the receptor height is redefined.

g. *Plume Behavior*

PLUME5 uses Briggs (1975) final plume rise formulas.

Expansion of plumes within and above a stable layer is treated.

h. *Horizontal Winds*

User-supplied hourly wind directions are read to nearest 1, 5, 10, and 22.5 degrees. (The 5, 10 and 22.5 degree values are randomly modified to nearest whole degree within the intervals).

PLUME5 employs the extrapolated mean wind speed at stack height when the effective stack height is equal to or less than the height of the inversion base above ground. If the plume rises into a stable layer, a separate algorithm is used.

Constant, uniform (steady state) wind assumed within each hour.

i. *Vertical Wind Speed*

Vertical wind speed is assumed equal to zero.

j. *Horizontal Dispersion*

Six stability classes are defined by either radiation index and wind speed (STAR), wind direction fluctuation, or temperature lapse rate.

Nighttime stability class is based on wind direction fluctuations or temperature lapse rate and may be modified according to the method of Mitchell and Timbre (1979).

Dispersion curves are from Turner (1969).

k. *Vertical Dispersion*

Six stability classes are defined by either radiation index and wind speed (STAR), wind direction fluctuations, or temperature lapse rate.

Nighttime stability class is based on wind direction fluctuations or temperature laspe rate and modified according to the method of Mitchell-Timbre (1979).

Dispersion curves are from Turner (1969).

l. *Chemical Transformation*

Chemical transformations are treated using exponential decay and/or ozone limiting procedures.

m. *Physical Removal*

Physical removal is treated using exponential decay. Half-life is input by the user.

n. *Evaluation Studies*

Londergan, R., D. Minott, D. Wackter, T. Kincaid and B. Bonitata, 1983. Evaluation of Rural Air Quality Simulation Models. EPA Publication No. EPA–450/4–83–003. U.S. Environmental Protection Agency, Research Triangle Park, NC.

Wackter, D., and R. Londergan, 1984. Evaluation of Complex Terrain Air Quality Simulation Models. EPA Publication No. EPA–450/4–84–017. U.S. Environmental Protection Agency, Research Triangle Park, NC.

B.18 PLMSTAR Air Quality Simulation Model

Reference

Lurmann, F. W., D. A. Godden, and H. Collins, 1985. User's Guide to the PLMSTAR Air Quality Simulation Model. ERT Document No. M–2206–100, Environmental Research & Technology, Inc., Newbury Park, CA.

Availability

The above report and a computer tape are available from: Computer Products, National Technical Information Service, U.S. Department of Commerce, 5825 Port Royal Road, Springfield, VA 22161. Phone: (703) 487–4650.

Abstract:

PLMSTAR is a mesoscale Lagrangian photochemical model designed to predict atmospheric concentrations of O_3, NO_2, HNO_3, PAN,

SO_2, and SO_4= from reactive hydrocarbons, NO_X and SO_X emissions. PLMSTAR is intended to simulate the behavior of pollutants in chemically reactive plumes resulting from major point source emissions. The model's Lagrangian air parcel is subdivided into a 5 layer/9 column domain of computational cells. The approach allows for realistic simulation of the combined effects of atmospheric chemical reactions and pollutant dispersion in the horizontal and vertical directions. Other key features of the model include: the capability for generation of trajectories at any level of a three-dimensional, divergence-free wind field; the capability for calculating and utilizing the time and space varying surface deposition of pollutants; an up-to-date O_3/RHC/NO_X/SO_X chemical mechanism that utilizes eight classes of reactive hydrocarbons; the capability for simultaneously handling both point and area source emissions; and the capability to simulate overwater conditions and land/water transitions.

a. *Recommendation for Regulatory Use*

There is no specific recommendation at the present time. The PLMSTAR Model may be used on a case-by-case basis.

b. *Input Requirements*

Source data requirements are: Emission rates, stack parameters, diurnal emission profiles, and RHC, NO_X, and SO_X partitioning profiles.

Meteorological data requirements are: Station location, grid geometry, surface winds, surface roughness, surface temperature, temperature profiles, mixing heights (optional), cloud cover, solar radiation, and winds aloft.

Receptor data requirements are: Receptor locations and topography.

c. *Output*

Printed output includes: Computed concentrations at specified times and receptors along the trajectory.

d. *Type of Model*

PLMSTAR is a Lagrangian photochemical model.

e. *Pollutant Types*

The key chemical species included in the model are O_3, NO, NO_2, HNO_3, PAN, SO_2, SO_4=, CO, and eight classes of reactive hydrocarbons. Twenty additional intermediate species are included in the chemical mechanism.

f. *Source-Receptor Relationships*

Source-receptor relationships for individual sources are calculated using a differencing technique. That is, simulations are made with and without an individual source (or group of collocated sources) in addition to the RHC/NO_X/SO_X emissions from all other sources in the region. The emission processors allow for up to 250 point sources and an unlimited number of area sources (allocated to a grid of 36 x 36 squares) to be included in the simulation.

g. *Plume Behavior*

Plume rise calculations are based on Briggs (1975).

h. *Horizontal Winds*

Gridded hourly multi-level horizontal wind fields are generated using techniques similar to those reported by Goodin et al. (1979). These involve wind data interpolation, divergence minimization, and terrain adjustment. Trajectory path segments are then generated by interpolation from the gridded horizontal wind fields in 15 minute steps at the user selected vertical level. Either source or receptor oriented trajectory may be generated.

i. *Vertical Wind speed*

Vertical speed is produced by WINDMOD, but is not utilized in the trajectory calculation or the pollutant advection algorithm.

j. *Vertical Dispersion*

Vertical eddy diffusivities (Kz) over land are calculated as a function of wind speed, stability, surface roughness, and boundary layer height. Over water, wind speed, air-to-sea temperature difference, humidity, and boundary layer height are the key parameters.

The effects of vertical dispersion on pollutant concentrations are calculated by numerically integrating finite difference approximations to the diffusion equation.

Mixing heights can be internally calculated or externally specified.

k. *Horizontal Dispersion*

Horizontal eddy diffusivities (K_y) are calculated either as a function of K_z and stability class or as a function of σ_y. The effects of horizontal dispersion on pollutant concentrations are calculated by numerically integrating finite difference approximations to the diffusion equation.

l. *Chemical Transformation*

PLMSTAR incorporates a slightly condensed version of the Atkinson et al. (1982) photochemical mechanism for O_3/RHC/NO_x/SO_x/air mixtures. The mechanism contains 62 reactions involving 38 species, including 8 classes of organic precursors. The effects of chemical transformations on pollutant concentrations are computed by numerically integrating the nonlinear kinetic rate equations.

m. *Physical Removal* Dry deposition of O_3, NO_2, HNO_3, PAN, SO_2, and SO_4= is based on the model of Wesely and Hicks (1977).

n. *Evaluation Studies*

Lurmann, F. W., D. A. Godden and A. C. Lloyd, 1982. The Development and Selected Sensitivity, Tests of the PLMSTAR Reactive Plume Model, Presented at the Third Joint Conference on Applications of Air Pollution Meteorology, San Antonio, TX.

Godden, D. and F. Lurmann, 1983. Development of the PLMSTAR Model and its Application to Ozone Episode Conditions in the South Coast Air Basin, ERT Document No. P–A702–200, Environmental Research & Technology, Inc., Newbury Park, CA.

Blumenthal, D. L., T. B. Smith, D. E. Lehrman, N. L. Alexander, F. Lurman, and D. Godden, 1985. Analysis of Aerometric and Meteorological Data for the Ventura County Region, Ref. #90094–511–FR. Sonoma Technology, Inc., and Environmental Research and Technology, Inc., for the Western Oil and Gas Association, Los Angeles, CA.

B.19 PLUME VISIBILITY MODEL (PLUVUE II)

Reference

Environmental Protection Agency, 1992. User's Manual for the Plume Visibility Model, PLUVUE II (Revised). EPA Publication No. EPA–454/B–92–008. U.S. Environmental Protection Agency, Research Triangle Park, NC.

Availability

This model code is available on the Support Center for Regulatory Air Models Bulletin Board System and also from the National Technical Information Service (see page B–1).

Abstract

The Plume Visibility Model (PLUVUE II) is a computerized model used for estimating visual range reduction and atmospheric discoloration caused by plumes resulting from the emissions of particles, nitrogen oxides and sulfur oxides from a single emission source. PLUVUE II predicts the transport, dispersion, chemical reactions, optical effects and surface deposition of point or area source emissions. Addenda to the User's Manual were prepared in February 1985 to allow execution of PLUVUE II and the test cases on the UNIVAC computer.

a. *Recommendations for Regulatory Use*

The Plume Visibility Model (PLUVUE II) may be used on a case-by-case basis. When applying PLUVUE II to assess the visual impact of a plume, the following precautions should be taken to avoid the possibility of error:

1. Treat the optical effects of NO_2 and particles separately as well as together to avoid cancellation of NO_2 absorption with particle scattering.
2. Examine the visual impact of the plume in 0.1 (or 0), 0.5, and 1.0 times the expected level of particulate matter in the background air.
3. Examine the visual impact of the plume over the full range of obser-ver - plume - sun angles.

b. *Input Requirements*

Source data requirements are: Location and elevation; emission rates of SO_2, NO_x, and particulates; flue gas flow rate, exit velocity, and exit temperature; flue gas oxygen content; properties (including density, mass median and standard geometric deviation of radius) of the emitted aerosols in the accumulation (0.1–1.0 μm) and coarse (1.0–10 μm) size modes; and deposition velocities for SO_2, NO_x, coarse mode aerosol, and accumulations mode aerosol.

Meteorological data requirements are: Stability class, wind direction (for an observer-based run), wind speed, lapse rate, air temperature, relative humidity, and mixing height.

Other data requirements are: Ambient background concentrations of NO_x, NO_2, O_3, and SO_2, background visual range or sulfate and nitrate concentrations.

Receptor (observer) data requirements are: Location, elevation, terrain which will be observed through the plume (for observer based run with white, gray, and black viewing backgrounds).

c. *Output*

Printed output includes: Plume concentrations and visual effects at specified downwind distances for calculated or specified lines of sight.

d. *Type of Model*

PLUVUE is a Gaussian plume model.

e. *Pollutant Types*

PLUVUE II treats NO, NO_2, SO_2, H_2SO_4, HNO_3, O_3, primary and secondary particles to calculate effects on visibility.

f. *Source Receptor Relationship*

PLUVUE treats a single point or area source.

Predicted concentrations and visual effects are obtained at user specified downwind distances.

g. *Plume Behavior*

PLUVUE uses Briggs (1969, 1971, 1972) final plume rise equations.

h. *Horizontal Winds*

User-specified wind speed (and direction for an observer-based run) are assumed constant for the calculation.

i. *Vertical Wind Speed*

Vertical wind speed is assumed equal to zero.

j. *Horizontal Dispersion*

User specified plume widths, or widths computed from either Pasquill-Gifford-Turner curves (Turner, 1969) or TVA curves (Carpenter, et al., 1971) are used in PLUVUE.

k. *Vertical Dispersion*

User specified plume depths, or computer from Pasquill-Gifford-Turner curves (Turner, 1969) or TVA curves (Carpenter, et al., 1971) are used in PLUVUE.

l. *Chemical Transformation*

PLUVUE II treats the chemistry of NO, NO_2, O_3, OH, $O(^1D)$, SO_2, HNO_3, and H_2SO_4, by means of nine reactions. Steady state approximations are used for radicals and for the $NO/NO_2/O_3$ reactions.

m. *Physical Removal*

Dry deposition of gaseous and particulate pollutants is treated using deposition velocities.

n. *Evaluation Studies*

Bergstrom, R. W., C. Seigneur, B. L. Babson, H. Y. Holman and M. A. Wojcik, 1981. Comparison of the Observed and Predicted Visual Effects Caused by Power Plant Plumes. Atmospheric Environment, 15: 2135–2150.

Bergstrom, R. W., Seigneur, C. D. Johnson, and L. W. Richards, 1984. Measurements and Simulations of the Visual Effects of Particulate Plumes. Atmospheric Environment, 18(10): 2231–2244.

Seigneur, C., R. W. Bergstrom, and A. B. Hudischewskyj, 1982. Evaluation of the EPA PLUVUE Model and the ERT Visibility Model Based on the 1979 VISTTA Data Base. EPA Publication No. EPA–450/4–82–008. U.S. Environmental Protection Agency, Research Triangle Park, NC.

White, W. H., C. Seigneur, D. W. Heinold, M. W. Eltgroth, L. W. Richards, P. T. Roberts, P. S. Bhardwaja, W. D. Conner and W. E. Wilson, Jr, 1985. Predicting the Visibility of Chimney Plumes: An Inter-comparison of Four Models with Observations at a Well-Controlled Power Plant. Atmospheric Environment, 19: 515–528.

B.20 POINT, AREA, LINE SOURCE ALGORITHM (PAL–DS)

Reference

Petersen, W. B, 1978. User's Guide for PAL—A Gaussian-Plume Algorithm for Point, Area, and Line Sources. EPA Publication No. EPA–600/4–78–013. Office of Research and Development, Research Triangle Park, NC. (NTIS No. PB 281306)

Rao, K. S. and H. F. Snodgrass, 1982. PAL–DS Model: The PAL Model Including Deposition and Sedimentation. EPA Publication No. EPA–600/8–82–023. Office of Research and Development, Research Triangle Park, NC. (NTIS No. PB 83–117739)

Availability

This model is available as part of UNAMAP (Version 6). The computer code is available on magnetic tape from: Computer Products, National Technical Information Service, U.S. Department of Commerce, Springfield, VA 22161. Phone: (703) 487–4650.

Abstract

PAL–DS is an acronym for this point, area, and line source algorithm and is a method of estimating short-term dispersion using Gaussian-plume steady-state assumptions. The algorithm can be used for estimating concentrations of non-reactive pollutants at 99 receptors for averaging times of 1 to 24 hours, and for a limited number of point, area, and line sources (99 of each type). This algorithm is not intended for application to entire urban areas but is intended, rather, to assess the impact on air quality, on scales of tens to hundreds of meters, of portions of urban areas such as shopping centers, large parking areas, and airports. Level terrain is assumed. The Gaussian point source equation estimates concentrations from point sources after determining the effective height of emission and the upwind and crosswind distance of the source from the receptor. Numerical integration of the Gaussian point source equation is used to determine concentrations from the four types of line sources. Subroutines are included that estimate concentrations for multiple lane line and curved path sources, special line sources (line sources with endpoints at different heights above ground), and special curved path sources. Integration over the area source, which includes edge effects from the source region, is done by considering finite line sources perpendicular to the wind at intervals upwind from the receptor. The crosswind integration is done analytically; integration upwind is done numerically by successive approximations.

The PAL–DS model utilizes Gaussian plume-type diffusion-deposition algorithms based on analytical solutions of a gradient-transfer model. The PAL–DS model can treat

deposition of both gaseous and suspended particulate pollutants in the plume since gravitational settling and dry deposition of the particles are explicitly accounted for. The analytical diffusion-deposition expressions listed in this report in the limit when pollutant settling and deposition velocities are zero, they reduce to the usual Gaussian plume diffusion algorithms in the PAL model.

a. *Recommendations for Regulatory Use*

PAL–DS can be used if it can be demonstrated to estimate concentrations equivalent to those provided by the preferred model for a given application. PAL–DS must be executed in the equivalent mode.

PAL–DS can be used on a case-by-case basis in lieu of a preferred model if it can be demonstrated, using the criteria in section 3.2, that PAL–DS is more appropriate for the specific application. In this case the model options/modes which are most appropriate for the application should be used.

b. *Input Requirements*

Source data: Point-sources—emission rate, physical stack height, stack gas temperature, stack gas velocity, stack diameter, stack gas volume flow, coordinates of stack, initial σ_y and σ_z; area sources—source strength, size of area source, coordinates of S.W. corner, and height of area source; and line sources—source strength, number of lanes, height of source, coordinates of end points, initial σ_y and σ_z, width of line source, and width of median. Diurnal variations in emissions are permitted. When applicable, the settling velocity and deposition velocity are also permitted.

Meteorological data: Wind profile exponents, anemometer height, wind direction and speed, stability class, mixing height, air temperature, and hourly variations in emission rate.

Receptor data: Receptor coordinates.

c. *Output*

Printed output includes:

Hourly concentration and deposition flux for each source type at each receptor; and

Average concentration for up to 24 hrs for each source type at each receptor.

d. *Type of Model*

PAL–DS is a Gaussian plume model.

e. *Pollutant Types*

PAL–DS may be used to model non-reactive pollutants.

f. *Source-Receptor Relationships*

Up to 99 sources of each of 6 source types: Point, area, and 4 types of line sources.

Source and receptor coordinates are uniquely defined.

Unique stack height for each source.

Coordinates of receptor locations are user defined.

g. *Plume Behavior*

Briggs final plume rise equations are used.

Fumigation and downwash are not treated.

If plume height exceeds mixing height, concentrations are assumed equal to zero.

Surface concentrations are set to zero when the plume centerline exceeds mixing height.

h. *Horizontal Winds*

User-supplied hourly wind data are used.

Constant, uniform (steady-state) wind is assumed within each hour. Wind is assumed to increase with height.

i. *Vertical Wind Speeds*

Assumed equal to zero.

j. *Horizontal Dispersion*

Rural dispersion coefficients from Turner (1969) are used with no adjustments made for surface roughness.

Six stability classes are used.

Dispersion coefficients (Pasquill-Gifford) are assumed based on a 3 cm roughness height.

k. *Vertical Dispersion*

Six stability classes are used.

Rural dispersion coefficients from Turner (1969) are used; no further ajustments are made for variation in surface roughness, transport or averaging time.

Multiple reflection is handled by summation of series until the vertical standard deviation equals 1.6 times mixing height. Uniform vertical mixing is assumed thereafter.

l. *Chemical Transformation*

Not treated.

m. *Physical Removal*

PAL–DS can treat deposition of both gaseous and suspended particulates in the plume since gravitational settling and dry deposition of the particles are explicitly accounted for.

n. *Evaluation Studies*

None.

B.21 Random-Walk Advection and Dispersion Model (RADM)

References

Austin, D. I., A. W. Bealer, and W. R. Goodin, 1981. RandomWalk Advection and Dispersion Model (RADM), User's Manual. Dames & Moore, Los Angeles, CA.

Runchal, A. K., W. R. Goodin, A. W. Bealer, D. I. Austin, 1981. Technical Description of the Random-Walk Advection and Dispersion Model (RADM). Dames & Moore, Los Angeles, CA.

Availability

A magnetic tape of the computer code and the user's manual are available for a cost of $440.00 from: Mr. C. James Olsten, Dames & Moore, 445 South Figueroa Street, Suite 3500, Los Angeles, CA 90071–1665.

Abstract

RADM is a Lagrangian dispersion model which uses the randomwalk method to simulate atmospheric dispersion. The technical procedure involves tracking tracer particles having a given mass through advection by the mean wind and diffusion by the random motions of atmospheric turbulence. Turbulent movement is calculated by determining the probability distribution of particle movement for a user-defined time step. A random number between 0 and 1 is then computed to determine the distance of particle movement according to the probability distribution. A large number of particles is used to statistically represent the distribution of pollutant mass. Concentrations are calculated by summing the mass in a volume around the receptor of interest and dividing the total mass by the volume. Concentrations can be calculated for any averaging time. RADM is applicable to point and area sources.

a. *Recommendations for Regulatory Use*

There is no specific recommendation at the present time. The RADM model may be used on a case-by-case basis.

b. *Input Requirements*

Source data requirements are: Emission rate, physical stack height, stack gas exit velocity, stack inside diameter, stack gas temperature. Hourly rates may be specified.

Meteorological data requirements are: Gridded wind field including wind speed, wind direction, stability class, temperature and mixing height.

Receptor data requirements are: coordinates, ground elevation, and receptor cell dimensions.

c. *Output*

Printed output includes:

Average concentration by receptor for user-specified averaging time (concentrations are printed for each block of n hours).

Average concentrations for the entire period of the run.

d. *Type of Model*

RADM is a random-walk Lagrangian dispersion model.

e. *Pollutant Types*

RADM may be used to model inert gases and particles, and pollutants with exponential decay or formation rates.

f. *Source-Receptor Relationship*

Multiple point and area sources may be specified at independent locations.

Unique stack characteristics are used for each source.

No restriction is placed on receptor locations.

Perfect reflection at the surface is assumed for the portion not removed by dry deposition.

Particles leaving the gridded area are removed from simulation.

g. *Plume Behavior*

Briggs (1975) final plume rise equations are used.

Inversion penetration by the plume is allowed.

Fumigation may occur as mixing height rises above a plume which has penetrated an inversion.

h. *Horizontal Winds*

Wind speed, wind direction, stability class, temperature and mixing height are supplied on a gridded array.

Any wind field may be used as long as output is in correct format for RADM input.

Wind field is updated at user-specified intervals, which may be less than one hour if data are available.

Vertical wind speed profile is used based on surface roughness and stability using Monin-Obukhov length.

i. *Vertical Wind Speed*

Assumed equal to zero.

j. *Horizontal Dispersion*

Dispersion is based on diffusivity values calculated from surface roughness, stability class and Monin-Obukhov length.

Diffusivity is a function of height.

k. *Vertical Dispersion*

Dispersion is based on diffusivity values calculated from surface roughness, stability class and Monin-Obukhov length.

Diffusivity is a function of height.

l. *Chemical Transformations*

Simple exponential decay or formation is used.

m. *Physical Removal*

Dry deposition is treated.

n. *Evaluation Studies*

Runchal, A. K., A. W. Bealer, and G. S. Segal, 1978. A Completely Lagrangian Random-Walk Model for Atmospheric Dispersion. Proceedings of the Thirteenth International Colloquium on Atmospheric Pollution, National Institute for Applications of Chemical Research, Paris; pp. 137–142.

Goodin, W. R., A. K. Runchal and G. Y. Lou, 1980. Evaluation and Application of the Random-Walk Advection and Dispersion Model (RADM). Symposium on Intermediate Range Atmospheric Transport Processes and Technology Assessment, DOE/NOAA/ORNL, Gatlinburg, TN.

Goodin, W. R., D. I. Austin and A. K. Runchal, 1980. A Model Verification and Prediction Study of $SO_2/SO_4^{=}$ Concentrations in the San Francisco Bay Area. Second Joint Conference on Applications of Air Pollution Meteorology, AMS/APCA, New Orleans, LA.

B.22 Reactive Plume Model (RPM–II)

Reference

D. Stewart, M. Yocke, and M–K Liu, 1981. Reactive Plume Model—RPM–II, User's Guide, EPA Publication No. EPA–600/8–81–021. U.S. Environmental Protection Agency, ESRL, Research Triangle Park, NC. (NTIS No. PB 82–230723)

Availability

The above report is available from NTIS ($16.95 for paper copy; $5.95 on microfiche). The accession number for the computer tape for RPM–II is PB83–154898, and the cost is $460.00. Requests should be sent to: Computer Products, National Technical Information Service, U.S. Department of Commerce, Springfield, VA 22161. Phone: (703) 487–4650.

Abstract

The Reactive Plume Model, RPM-II, is a computerized model used for estimating short-term concentrations of primary and secondary pollutants resulting from point or area source emissions. The model is capable of simulating the complex interaction of plume dispersion and non-linear photochemistry. Two main features of the model are: (1) The horizontal resolution within the plume, which offers a more realistic treatment of the entrainment process, and (2) its flexibility with regard to choices of chemical kinetic mechanisms.

a. *Recommendations for Regulatory Use*

There is no specific recommendation at the present time. The RPM–II Model may be used on a case-by-case basis.

b. *Input Requirements*

Source data requirements are: Emission rates, name, and molecular weight of each species of pollutant emitted; ambient pressure, ambient temperature, stack height, stack diameter, stack exit velocity, stack gas temperature, and location.

Meteorological data requirements are: Wind speeds, plume widths or stability classes, photolytic rate constants, and plume depths or stability classes.

Receptor data requirements are: Downwind distances or travel times at which calculations are to be made.

Initial concentration of all species is required, and the specification of downwind ambient concentrations to be entrained by the plume is optional.

c. *Output*

Short-term concentrations of primary and secondary pollutants at either user specified time increments, or user specified downwind distances.

d. *Type of Model*

Reactive plume model.

e. *Pollutant Types*

Currently, using the Carbon Bond Mechanism (CBM–II), 35 species are simulated (68 reactions), including NO, NO_2, O_3, SO_2, $SO_4^{=}$, five categories of reactive hydrocarbons, secondary nitrogen compounds, organic aerosols, and radical species.

f. *Source-Receptor Relationships*

Single point source.

Single aera or volume source.

Multiple sources can be simulated if they are lined up along the wind trajectory.

redicted concentrations are obtained at a user specified time increment, or at user specified downwind distances.

g. *Plume Behavior*

riggs (1971) plume rise equations are used.

h. *Horizontal Winds*

User specifies wind speeds as a function of time.

i. *Vertical Wind Speed*

Not treated.

j. *Horizontal Dispersion*

User specified plume widths, or user may specify stability and widths will be computed using Turner (1969).

k. *Vertical Dispersion*

User specified plume depths, or user may specify stability in which case depths will be

calculated using Turner (1969). Note that vertical uniformity in plume concentration is assumed.

l. *Chemical Transformation*

The RPM–II has the flexibility of using any user input chemical kinetic mechanism. Currently it is run using the chemistry of the Carbon Bond Mechanism, CBM–II (Whitten, Killus, and Hogo, 1980). The CBM–II, as incorporated in the RPM–II, contains 35 species and 68 reactions focusing primarily on hydrocarbon-nitrogen oxides-ozone photochemistry.

m. *Physical Removal*

Not treated.

n. *Evaluation Studies*

Stewart, D. A. and M–K Liu, 1981. Development and Application of a Reactive Plume Model. Atmospheric Environment, 15: 2377–2393.

B.23 REGIONAL TRANSPORT MODEL (RTM–II)

Reference

Morris, R. E., D. A. Stewart, and M–K Liu, 1982. Revised User's Guide to the Regional Transport Model—Version II. Publication No. SYSAPP–83/022, Systems Applications Inc., San Rafael, CA.

Availability

The computer code is available on magnetic tape for a cost of $100 (which includes the User's Manual) from: Systems Applications, Inc., 101 Lucas Valley Road, San Raphael, CA 94903.

Abstract

The Regional Transport Model (RTM–II) is a computer based air quality grid model whose primary use is estimating the distribution of air pollution from multiple point sources and area sources at large distances (on the scale of several hundred to a thousand kilometers). RTM–II offers significant advantages over other long-range transport models because it is a quasi-three dimensional hybrid (grid plus Lagrangian puff) approach to the solution of the advectiondiffusion equation. Furthermore, its formulation allows the treatment of spatially and temporally varying wind, mixing depths, diffusivity, and transformation rate fields. It is also capable of treating spatially varying surface depletion processes. While the modeling concept is capable of predicting concentration distributions of many pollutant species (e.g., NO_X, CO, TSP, etc.), the most notable applications of the model to date focus on the long-range transport and transformation of SO_2 and sulfates.

a. *Recommendations for Regulatory Use*

There is no specific recommendation at the present time. The RTM Model may be used on a case-by-case basis.

b. *Input Requirements*

Source data requirements are: Major point source SO_2 and primary sulfate emissions, including stack height, diameter, exit velocity, exit temperature, and hourly emission factors; area source SO_2 and primary $SO^{=}_4$ emissions in gridded format.

Meteorological data requirements are: Gridded u, v wind fields at user specified update interval (model configured for separate wind fields in each of two layers), derived from twice daily radiosonde data, time variation linear between a maximum convectively driven boundary layer and a minimum mechanically driven boundary layer, spatial interpolation by an inverse distance weighted objective scheme; gridded hourly precipitation fields determined either by averaging precipitation rate of all stations in grid (if high density), or by inverse distance weighted interpolation (if low density).

Other data requirements are: Parameter file, containing region definition, starting time, output and averaging time intervals, region top specifications, and various operational flags; horizontal diffusivity fields calculated from wind fields; land use type file; deposition velocities and roughness length determined internally from tabulated values associated with land use types; initial conditions and boundary conditions for both layers (boundary conditions may be time varying).

c. *Output*

Printed output includes:

Diagnostic information.

Instantaneous SO_2 and sulfate concentration fields for lower and upper layers at prespecified time intervals.

Average SO_2 and sulfate concentration fields for upper and lower layer, over prespecified time intervals. Accumulated dry and wet deposition for each species over preselected time intervals.

d. *Type of Model*

RTM–II is a hybrid Eulerian grid and Lagrangian puff model.

e. *Pollutant Types*

RTM–II is configured for SO_2 and sulfate only. Primary sulfate emissions may be included.

f. *Source Receptor Relationships*

Area sources and minor point sources are specified at each grid within the modeling domain.

Up to 500 major point sources (modeled with the Gaussian puff submodel) are allowed.

Grid average concentration and deposition totals are provided at each grid within the modeling domain (dry deposition for lower layer grid only). All lower grid average concentration values are assumed to be representative of ground-level receptors.

g. *Plume Behavior*

Plume rise (Briggs, 1971) is calculated for all major point sources regardless of whether they are treated in the Gaussian puff submodel.

h. *Horizontal Winds*

Gridded u, v wind fields are used at a user specified update interval for each layer.

Gaussian puff submodel tracks puff centroids horizontally at user specified time intervals.

i. *Vertical Wind Speed*

Considered implicitly if convergent or divergent winds are provided.

j. *Horizontal Dispersion*

Plume dispersion is based on σ_y differentials derived from a power law fit to Turner (1969) dispersion curves. Variable stabilities within adjacent cells are considered.

Horizontal eddy diffusivities are proportional to the wind field deformation and are calculated from the gridded wind fields as ancilliary input. Maximum and minimum constraints are imposed on the magnitude of the diffusivities.

k. *Vertical Dispersion*

Plume dispersion is based on σ_z differentials derived from a power law fit to Turner (1969) dispersion curves. Variable stabilities within adjacent cells are considered.

Vertical dispersion across the mixed layer-surface layer interface is considered when calculating pollutant deposition.

l. *Chemical Transformation*

Linear SO_2 oxidation is treated. Rate constant is diurnally and latitudinally variable. A minimum oxidation rate constant is specified to account for heterogeneous oxidation during the nighttime.

m. *Physical Removal*

Dry deposition of SO_2 and sulfate is treated. Precipitation scavenging of SO_2 (reversible) and sulfate (irreversible) is treated.

n. *Evaluation Studies*

Stewart, D. A., R. E. Morris, M-K Liu, and D. Henderson, 1983. Evaluation of an Episodic Regional Transport Model for a Multiple Day Episode. *Atmospheric Environment,* 17: 1225–1252.

B.24 SHORTZ

Reference

Bjorklund, J. R., and J. F. Bowers, 1982. User's Instructions for the SHORTZ and LONGZ Computer Programs, Volumes I and II. EPA Publication No. EPA–903/9–82–004a and b. U.S. Environmental Protection Agency, Region III, Philadelphia, PA.

Availability

This model is available as part of UNAMAP (Version 6). The computer code is available on magnetic tape from: Computer Products, National Technical Information Service, U.S. Department of Commerce, Springfield, VA 22161. Phone: (703) 487–4650.

Abstract

SHORTZ utilizes the steady state bivariate Gaussian plume formulation for both urban and rural areas in flat or complex terrain to calculate ground-level ambient air concentrations. It can calculate 1-hour, 2-hour, 3-hour etc. average concentrations due to emissions from stacks, buildings and area sources for up to 300 arbitrarily placed sources. The output consists of total concentration at each receptor due to emissions from each userspecified source or group of sources, including all sources. If the option for gravitational settling is invoked, analysis cannot be accomplished in complex terrain without violating mass continuity.

a. *Recommendations for Regulatory Use*

SHORTZ can be used if it can be demonstrated to estimate concentrations equivalent to those provided by the preferred model for a given application. SHORTZ must be executed in the equivalent mode.

SHORTZ can be used on a case-by-case basis in lieu of a preferred model if it can be demonstrated, using the criteria in section 3.2, that SHORTZ is more appropriate for the specific application. In this case the model options/modes which are most appropriate for the application should be used.

b. *Input Requirements*

Source data requirements are: For point, building or area sources, location, elevation, total emission rate (optionally classified by gravitational settling velocity) and decay coefficient; for stack sources, stack height, effluent temperature, effluent exit velocity, stack radius (inner), actual volumetric flow rate, and ground elevation (optional); for building sources, height, length and width, and orientation; for area sources, characteristic vertical dimension, and length, width and orientation.

Meteorological data requirements are: Wind speed and measurement height, wind profile exponents, wind direction, standard deviations of vertical and horizontal wind directions, (i.e., vertical and lateral turbulent intensities), mixing height, air temperature, and vertical potential temperature gradient.

Receptor data requirements are: coordinates, ground elevation.

c. *Output*

Printed output includes: Total concentration due to emissions from user-specified source groups, including the combined emissions from all sources (with optional allowance for depletion by deposition).

d. *Type of Model*

SHORTZ is a Gaussian plume model.

e. *Pollutant Types*

SHORTZ may be used to model primary pollutants. Settling and deposition of particulates are treated.

f. *Source-Receptor Relationships*

User specified locations for sources and receptors are used.

Receptors are assumed to be at ground level.

g. *Plume Behavior*

Plume rise equations of Bjorklund and Bowers (1982) are used.

Stack tip downwash (Bjorklund and Bowers, 1982) is included.

All plumes move horizontally and will fully intercept elevated terrain.

Plumes above mixing height are ignored.

Perfect reflection at mixing height is assumed for plumes below the mixing height.

Plume rise is limited when the mean wind at stack height approaches or exceeds stack exit velocity.

Perfect reflection at ground is assumed for pollutants with no settling velocity.

Zero reflection at ground is assumed for pollutants with finite settling velocity.

Tilted plume is used for pollutants with settling velocity specified. Buoyancy-induced dispersion (Briggs, 1972) is included.

h. *Horizontal Winds*

Winds are assumed homogeneous and steady-state.

Wind speed profile exponents are functions of both stability class and wind speed. Default values are specified in Bjorklund and Bowers (1982).

i. *Vertical Wind Speed*

Vertical winds are assumed equal to zero.

j. *Horizontal Dispersion*

Horizontal plume size is derived from input lateral turbulent intensities using adjustments to plume height, and rate of plume growth with downwind distance specified in Bjorklund and Bowers (1982).

k. *Vertical Dispersion*

Vertical plume size is derived from input vertical turbulent intensities using adjustments to plume height and rate of plume growth with downwind distance specified in Bjorklund and Bowers (1982).

l. *Chemical Transformation*

Chemical transformations are treated using exponential decay. Time constant is input by the user.

m. *Physical Removal*

Settling and deposition of particulates are treated.

n. *Evaluation Studies*

Bjorklund, J. R., and J. F. Bowers, 1982. User's Instructions for the SHORTZ and LONGZ Computer Programs. EPA Publication No. EPA–903/9–82004. EPA Environmental Protection Agency, Region III, Philadelphia, PA.

Wackter, D., and R. Londergan, 1984. Evaluation of Complex Terrain Air Quality Simulation Models. EPA Publication No. EPA–450/4–84–017. U.S. Environmental Protection Agency, Research Triangle Park, NC.

B.25 SIMPLE LINE-SOURCE MODEL (GMLINE)

Reference

Chock, D. P., 1980. User's Guide for the Simple Line-Source Model for Vehicle Exhaust Dispersion Near a Road, Environmental Science Department, General Motors Research Laboratories, Warren, MI.

Availability

Copies of the above reference are available without charge from: Dr. D. P. Chock, Environmental Science Department, General Motors Research Laboratories, General Motors Technical Center, Warren, MI 48090.

The User's Guide contains the short algorithm of the model.

Abstract

GMLINE is a simple steady-state Gaussian plume model which can be used to determine hourly (or half-hourly) averages of exhaust concentrations within 100m from a roadway on a relatively flat terrain. The model allows for plume rise due to the heated exhaust, which can be important when the crossroad wind is very low. It also utilizes a new set of vertical dispersion parameters which reflects the influence of traffic-induced turbulence.

a. *Recommendations for Regulatory Use*

GMLINE can be used if it can be demonstrated to estimate concentrations equivalent to those provided by the preferred model for a given application. GMLINE must be executed in the equivalent mode.

GMLINE can be used on a case-by-case basis in lieu of a preferred model if it can be demonstrated, using the criteria in Section 3.2, that GMLINE is more appropriate for the specific application. In this case the model options/modes which are most appropriate for the application should be used.

b. *Input Requirements*

Source data requirements are: Emission rate per unit length per lane, the number of lanes on each road, distances from lane centers to the receptor, source and receptor heights.

Meteorological data requirements are: Buoyancy flux, ambient stability condition, ambient wind and its direction relative to the road.

Receptor data requirements are: Distance and height above ground.

c. *Output*

Printed output includes: Hourly or (half-hourly) concentrations at the receptor due to exhaust emission from a road (or a system of roads by summing the results from repeated model applications).

d. *Type of Model*

GMLINE is a Gaussian plume model.

e. *Pollutant Types*

GMLINE can be used to model primary pollutants. Settling and deposition are not treated.

f. *Source-Receptor Relationship*

GMLINE treats arbitrary location of line sources and receptors.

g. *Plume Behavior*

Plume-rise formula adequate for a heated line source is used.

h. *Horizontal Winds*

GMLINE uses user-supplied hourly (or half-hourly) ambient wind speed and direction. The wind measurements are from a height of 5 to 10m.

i. *Vertical Wind Speed*

Vertical wind speed is assumed equal to zero.

j. *Dispersion Parameters*

Horizontal dispersion parameter is not used.

k. *Vertical Dispersion*

A vertical dispersion parameter is used which is a function of stability and wind-road angle. Three stability classes are used: unstable, neutral and stable. The parameters take into account the effect of traffic-generated turbulence (Chock, 1980).

l. *Chemical Transformation*

Not treated.

m. *Physical Removal*

Not treated.

n. *Evaluation Studies*

Chock, D. P., 1978. A Simple Line-Source Model for Dispersion Near Roadways. *Atmospheric Environment*, 12: 823–829.

Sistla, G., P. Samson, M. Keenan, and S. T. Ras, 1979. A Study of Pollutant Dispersion Near Highways. *Atmospheric Environment*, 13: 669–685.

B.26 TEXAS CLIMATOLOGICAL MODEL (TCM–2)

Reference

Staff of the Texas Air Control Board, 1980. User's Guide to the TEXAS CLIMATOLOGICAL MODEL (TCM). Texas Air Control Board, Permits Section, 6330 Highway 290 East, Austin, TX.

Availability

The TCM–2 model is available from the Texas Air Control Board at the following cost:

User's Manual only—$20.00

User's Manual and Model (Magnetic Tape)—$80.00

Requests should be directed to: Data Processing Division, Texas Air Control Board, 6330 Highway 290 East, Austin, TX 78723.

Abstract

TCM is a climatological steady-state Gaussian plume model for determining long-term (seasonal or annual arithmetic) average pollutant concentrations of non-reactive pollutants.

a. *Recommendations for Regulatory Use*

TCM can be used if it can be demonstrated to estimate concentrations equivalent to those provided by the preferred model for a given application. TCM must be executed in the equivalent mode.

TCM can be used on a case-by-case basis in lieu of a preferred model if it can be demonstrated, using the criteria in section 3.2, that TCM is more appropriate for the specific application. In this case the model options/modes which are most appropriate for the application should be used.

b. *Input Requirements*

Source data requirements are: Point source coordinates emission rates (by pollutant), stack height, stack diameter, stack gas exit velocity, stack gas temperature; area source coordinates (southwest corner), size, emission rate.

Meteorological data requirements are: Stability wind rose and average temperature.

Receptor data requirements are: Size and spacing of the rectangular receptor grid.

c. *Output*

Printed output includes:

Period average concentrations listed, displayed in map format, or punched on cards at the user's option.

Culpability list option provides the contributions of the five highest contributors at each receptor.

Maximum concentration option provides the maximum concentration for each scenario (run).

d. *Type of Model*

TCM is a Gaussian plume model.

e. *Pollutant Types*

TCM may be used to model primary pollutants. Settling and deposition are not treated.

f. *Source-Receptor Relationship*

Arbitrary location of point sources and area sources are treated.

Arbitrary location and spacing of rectangular grid of receptors are used. (Area source grid is best defined in terms of the receptor grid, so that the receptors fall in the center of the area source).

Receptors located in simple terrain may be modeled.

g. *Plume Behavior*

Briggs (1975) plume rise equations, including momentum rise, are used for point sources.

Two-thirds power law is used when transitional rise option is selected. Flares are treated.

h. *Horizontal Winds*

Characteristic wind speed is calculated for each direction-stability class combination.

This characteristic speed is the inverse of the average inverse speed for the stability-wind direction combination.

Wind speed is adjusted to stack height by a power law using exponents of 0.10, 0.15, 0.20, 0.25, 0.30, and 0.30 for stabilities A through F, respectively.

i. *Vertical Wind Speed*

Vertical wind speed is assumed to be zero.

j. *Horizontal Dispersion*

Uniform distribution within each 22.5 degree sector is assumed.

k. *Vertical Dispersion*

Dispersion parameters for point sources are fit to Turner (1969); for area sources in the urban mode the fit is to Gifford and Hanna (1970).

Seven stability classes are used.

Pasquill A through F are treated, with daytime ''D'' and nighttime ''D'' given separately.

In the urban mode, E and F stability classes are treated as D-night. Perfect reflection at the ground is assumed.

l. *Chemical Transformation*

Chemical transformations are treated using exponential decay. Half-life is input by the user.

m. *Physical Removal*

Physical removal is treated using exponential decay. Half-life is input by the user.

n. *Evaluation Studies*

Londergan, R. J., D. H. Minott, D. J. Wachter and R. R. Fizz, 1983. Evaluation of Urban Air Quality Simulation Models. EPA Publication No. EPA–450/4–83–020. U.S. Environmental Protection Agency, Research Triangle Park, NC.

Durrenberger, C. S., B. A. Braberg, and K. Zimmermann, 1983. Development of a Protocol to be Used for Dispersion Model Comparison Studies. Presented at the 76th Annual Meeting of the Air Pollution Control Association, Atlanta, GA.

B.27 TEXAS EPISODIC MODEL (TEM–8)

Reference

Staff of the Texas Air Control Board, 1979. User's Guide to the TEXAS EPISODIC MODEL. Texas Air Control Board, Permits Section, 6330 Highway 290 East, Austin, TX.

Availibility

The TEM–8 model is available from the Texas Air Control Board at the following costs:

User's Manual only—$20.00

User's Manual and Model (Magnetic Tape)—$80.00

Requests should be directed to: Data Processing Division, Texas Air Control Board, 6330 Highway 290 East, Austin, TX 78723.

Abstract

TEM is a short-term, steady-state Gaussian plume model for determining short-term concentrations of non-reactive pollutants.

a. *Recommendations for Regulatory Use*

TEM can be used if it can be demonstrated to estimate concentrations equivalent to those provided by the preferred model for a given application. TEM must be executed in the equivalent mode.

TEM can be used on a case-by-case basis in lieu of a preferred model if it can be demonstrated, using the criteria in section 3.2, that TEM is more appropriate for the specific application. In this case the model options/modes which are most appropriate for the application should be used.

b. *Input Requirements*

Source data requirements are: Locations, average emission rates and heights of emissions for both point and area sources; stack gas temperature, stack gas exit velocity, and stack inside diameter for point sources for plume rise calculations.

Meteorological data requirements are: Hourly surface weather data from the EPA meteorological preprocessor program. Preprocessor output includes hourly stability class, wind direction, wind speed, temperature, and mixing height. Any combination of hourly meteorological data up to 24 hours may be used, (e.g., 1, 3, 5, 8, 24 hours).

Receptor requirements are: Size, spacing and location of rectangular grid of receptors.

c. *Output*

Printed output includes: concentration list;

Spatial array (concentrations displayed as on a map);

Punched cards of the concentration list;

Culpability list (percent contributions) of the five highest contributors to each receptor;

Maximum concentration; and

Point source list.

d. *Type of Model*

TEM is a Gaussian plume model.

e. *Pollutant Types*

TEM can be used to model non-reactive pollutants. Settling and deposition are not treated.

f. *Source-Receptor Relationship*

Arbitrary locations of point sources and area sources are treated.

Arbitrary location and spacing of rectangular grid of receptors is treated. Area source grid is best defined in terms of the receptor grid so that the receptors fall in the centers of the area sources.

Receptors located in simple terrain may be modeled.

g. *Plume Behavior*

Briggs (1975) plume rise equations are used, including momentum rise, for point sources.

Transitional rise is calculated.

Stack-tip downwash may be evaluated.

h. *Horizontal Winds*

Wind speeds are adjusted to release height by power law formula, using exponents of 0.10, 0.15, 0.20, 0.25, 0.30 and 0.35 for stabilities A through F, respectively.

Steady-state wind is assumed.

i. *Vertical Wind Speed*

Vertical wind is assumed equal to zero.

j. *Horizontal Dispersion*

Gaussian plume coefficients are fitted to Turner (1969). The Turner curves are treated as 10-minute averages and the coefficients are adjusted to represent 30-minute or hourly as appropriate.

In the urban mode, stable cases are shifted to neutral nighttime (D-night) conditions and urban mixing heights are used.

k. *Vertical Dispersion*

Dispersion parameters for point sources are fit to Turner (1969); for area sources, in the urban mode, the fit is to Gifford and Hanna (1970).

Total reflection of the plume at the ground is assumed.

In the urban mode, E and F stability classes are treated as D-nighttime.

l. *Chemical Transformation*

Chemical transformation is treated using exponential decay. Half-life is input by the user.

m. *Physical Removal*

Physical removal is treated using exponential decay. Half-life is input by the user.

n. *Evaluation Studies*

Londergan, R., D. Minott, D. Wachter, T. Kincaid and D. Bonitata, 1983. Evaluation of Rural Air Quality Simulation Models. EPA–450/4–83–003, Environmental Protection Agency, Research Triangle Park, NC.

Durrenberger, C. J., B. A. Broberg, and K. Zimmermann, 1983. Development of a Protocol to be Used for Dispersion Model Comparison Studies. Presented at the 76th Annual Meeting of the Air Pollution Control Association, Atlanta, GA.

B.28 AVACTA II

Reference

Zannetti, P., G. Carboni and R. Lewis, 1985. AVACTA II User's Guide (Release 3). AeroVironment, Inc., Technical Report AV–OM–85/520.

Availability

A magnetic tape copy of the FORTRAN coding and the user's guide are available at a cost of $2,500 (non-profit organization) or $3,500 (other organizations) from: AeroVironment, Inc., 825 Myrtle Avenue, Monrovia, CA 91016. Phone: (818) 357–9983.

Abstract

The AVACTA II model is a Gaussian model in which atmospheric dispersion phenomena are described by the evolution of plume elements, either segments or puffs. The model can be applied for short time (e.g., one day) simulations in both transport and calm conditions.

The user is given flexibility in defining the computational domain, the three-dimensional meteorological and emission input, the receptor locations, the plume rise formulas, the sigma formulas, etc. Without explicit user's specifications, standard default values are assumed.

AVACTA II provides both concentration fields on the user specified receptor points, and dry/wet deposition patterns throughout the domain. The model is particularly oriented to the simulation of the dynamics and transformation of sulfur species (SO_2 and SO_4=), but can handle virtually any pair of primary-secondary pollutants.

a. *Recommendations for Regulatory Use*

AVACTA II can be used if it can be demonstrated to estimate concentrations equivalent to those provided by the preferred model for a given application. AVACTA II must be executed in the equivalent mode. 1AVACTA II can be used on a case-by-case basis in lieu of a preferred model if it can be demonstrated, using the criteria in section 3.2, that AVACTA II is more appropriate for the specific application. In this case the model options/modes which are most appropriate for the application should be used.

b. *Input Requirements* (all time-varying)

A time-varying input is required at each computational step. Only those data which have changed need to be input by the user.

Source data requirements are: Coordinates, emission rates of primary and secondary pollutants, initial plume sigmas (for non-point sources), exit temperature, exit velocity, stack inside diameter.

Meteorological data requirements are: Surface wind measurements, wind profiles (if available), atmospheric stability profiles, mixing heights.

Receptor data requirements are: Receptor coordinates.

Other data requirements: Coordinates of the computational domain, grid cell specification, terrain elevations, user's computational and printing options.

c. *Output*

The model's outpout is provided according to user's printing flags. Hourly, 3-hour and 24-hour concentration averages are computed, together with highest and highest-second-highest concentration values. Both partial and total concentrations are provided.

d. *Type of Model*

AVACTA II is Gaussian segment/puff model.

e. *Pollutant Types*

AVACTA II can handle any couple of primary-secondary pollutants (e.g., SO_2 and SO_4=).

f. *Source Receptor Relationship*

The AVACTA II approach maintains the basic Gaussian formulation, but allows a numerical simulation of both nonstationary and nonhomogeneous meteorological conditions. The emitted pollutant material is divided into a sequence of ''elements,'' either segments or puffs, which are connected together but whose dynamics are a function of the local meteorological conditions. Since the meteorological parameters vary with time and space, each element evolves according to the different meteorological conditions encountered along its trajectory.

AVACTA II calculates the partial contribution of each source in each receptor during each interval. The partial concentration is the sum of the contribution of all existing puffs, plus that of the closest segment.

g. *Plume Behavior*

The user can select the following plume rise formulas:

Briggs (1969, 1971, 1972)
CONCAWE (Briggs, 1975)
Lucas-Moore (Briggs, 1975)
User's function, i.e., a subroutine supplied by the user

With cold plumes, the program uses a special routine for the computation of the jet plume rise. The user can also select several computational options that control plume behavior in complex terrain and its total/partial reflections.

h. *Horizontal Winds*

A 3D mass-consistent wind field is optionally generated.

i. *Vertical Wind Speed*

A 3D mass-consistent wind field is optionally generated.

j. *Horizontal Dispersion*

During each step, the sigmas of each element are increased. The user can select the following sigma functions:

Pasquill-Gifford-Turner (in the functional form specified by Green et al., 1980)
Brookhaven (Gifford, 1975)
Briggs, open country (Gifford, 1975)
Briggs, urban, i.e., McElory-Pooler, (Gifford, 1975)
Irwin (1979)
LO–LOCAT (MacCready et al., 1974)
User-specified function, by points
User-specified function, with a user's subroutine

The virtual distance/age concept is used for incrementing the sigmas at each time step.

k. *Vertical Dispersion*

During each step, the sigmas of each element are increased. The user can select the following sigma functions:

Pasquill-Gifford-Turner (in the functional form specified by Green et al., 1980)
Brookhaven (Gifford, 1975)
Briggs, open country (Gifford, 1975)
Briggs, urban, i.e., McElroy-Pooler, (Gifford, 1975)
LO–LOCAT (MacCready et al., 1974)
User-specified function, with a user's subroutine

The virtual distance/age concept is used for incrementing the sigmas at each time step.

l. *Chemical Transformation*

First order chemical reactions (primary-to-secondary pollutant).

m. *Physical Removal*

First order dry and wet deposition schemes.

n. *Evaluation Studies*

Zannetti P., G. Carboni and A. Ceriani, 1985. AVACTA II Model Simulations of Worst-Case Air Pollution Scenarios in Northern Italy. 15th International Technical Meeting on Air Pollution Modeling and Its Application, St. Louis, Missouri, April 15–19.

B.29 SHORELINE DISPERSION MODEL (SDM)

Reference

PEI Associates, 1988. User's Guide to SDM—A Shoreline Dispersion Model. EPA Publication No. EPA–450/4–88–017. U.S. Environmental Protection Agency, Research Triangle Park, NC. (NTIS No. PB 89–164305)

Availability

The user's guide is available from the National Technical Information Service. The model code is available on the Support Center for Regulatory Air Models Bulletin Board System (see page B–1).

Abstract

SDM is a hybrid multipoint Gaussian dispersion model that calculates source impact for those hours during the year when fumigation events are expected using a special fumigation algorithm and the MPTER regulatory model for the remaining hours (see Appendix A).

a. *Recommendations for Regulatory Use*

SDM may be used on a case-by-case basis for the following applications:

- Tall stationary point sources located at a shoreline of any large body of water;
- Rural or urban areas;
- Flat terrain;
- Transport distances less than 50 km;
- 1-hour to 1-year averaging times.

b. *Input Requirements*

Source data: Location, emission rate, physical stack height, stack gas exit velocity, stack inside diameter, stack gas temperature and shoreline coordinates.

Meteorological data: Hourly values of mean wind speed within the Thermal Internal Boundary Layer (TIBL) and at stack height; mean potential temperature over land and over water; over water lapse rate; and surface sensible heat flux. In addition to these meteorological data, SDM access standard NWS surface and upper air meteorological data through the RAMMET preprocessor.

Receptor data: coordinates for each receptor.

c. *Output*

Printed output includes the MPTER model output as well as: special shoreline fumigation applicability report for each day and source; high-five tables on the standard output with ''F'' designation next to the concentration if that averaging period includes a fumigation event.

d. *Type of Model*

SDM is hybrid Gaussian model.

e. *Pollutant Types*

SDM may be used to model primary pollutants. Settling and deposition are not treated.

f. *Source-Receptor Relationships*

SDM applies user-specified locations of stationary point sources and receptors. User input stack height, shoreline orientation and source characteristics for each source. No topographic elevation is input; flat terrain is assumed.

g. *Plume Behavior*

SDM uses Briggs (1975) plume rise for final rise. SDM does not treat stack tip or building downwash.

h. *Horizontal Winds*

Constant, uniform (steady-state) wind is assumed for an hour. Straight line plume transport is assumed to all downwind distances. Separate wind speed profile exponents (EPA, 1980) for both rural and urban cases are assumed.

i. *Vertical Wind Speed*

Vertical wind speed is assumed equal to zero.

j. *Horizontal Dispersion*

For the fumigation algorithm coefficients based on Misra (1980) and Misra and McMillan (1980) are used for plume transport in stable air above TIBL and based on Lamb (1978) for transport in the unstable air below the TIBL. An effective horizontal dispersion coefficient based on Misra and Onlock (1982) is used. For nonfumigation periods, algorithms contained in the MPTER model are used (see Appendix A).

k. *Vertical Dispersion*

For the fumigation algorithm, coefficients based on Misra (1980) and Misra and McMillan (1980) are used.

l. *Chemical Transformation*

Chemical transformation is not included in the fumigation algorithm.

m. *Physical Removal*

Physical removal is not explicitly treated.

n. *Evaluation Studies*

Environmental Protection Agency, 1987. Analysis and Evaluation of Statistical Coastal Fumigation Models. EPA Publication No. EPA–450/4–87–002. U.S. Environmental Protection Agency, Research Triangle Park, NC. (NTIS PB 87–175519)

B.30 WYNDVALLEY MODEL

Reference

Harrison, Halstead, 1992. ''A User's Guide to WYNDvalley 3.11, an Eulerian-Grid Air-Quality Dispersion Model with Versatile Boundaries, Sources, and Winds,'' WYNDsoft Inc., Mercer Island, WA.

Availability

Copies of the user's guide and the executable model computer codes are available at a cost of $295.00 from: WYNDsoft, Incorporated, 6333 77th Avenue SE., Mercer Island, WA 98040. Phone: (206) 232–1819.

Abstract

WYNDvalley 3.11 is a multi-layer (up to five vertical layers) Eulerian grid dispersion model that permits users flexibility in defining borders around the areas to be modeled, the boundary conditions at these borders, the intensities and locations of emissions sources, and the winds and diffusivities that affect the dispersion of atmospheric pollutants. The model's output includes gridded contour plots of pollutant concentrations for the highest brief episodes (during any single time step), the highest and second-highest 24-hour averages, averaged dry and wet deposition fluxes, and a colored ''movie'' showing evolving dispersal of pollutant concentrations, together with temporal plots of the concentrations at specified receptor sites and statistical inference of the probabilities that standards will be exceeded at those sites. WYNDvalley is implemented on IBM® compatible microcomputers, with interactive data input and color graphics display.

a. *Recommendations for Regulatory Use*

WYNDvalley may be used on a case-by-case basis to estimate concentrations during valley stagnation periods of 24 hours or longer. Recommended inputs are listed below.

Variable	*Recommended Value*
Horizontal cell dimension	250 to 500 meters
Vertical layers	3 to 5
Layer depth	50 to 100 meters
Background	(internal to model)
Zero	(background should be added externally to model estimates)
Lateral meander velocity	default
Diffusivities	default
Ventilation parameter	(upper default boundary condition)
Dry deposition velocity	zero (site-specific)
Washout ratio	zero (site-specific)

b. *Input Requirements*

Input data, including model options, modeling domain boundaries, boundary conditions, receptor locations, source locations, and emission rates, may be entered interactively, or through existing template files from a previous run. Meteorological data, including wind speeds, wind directions, rain rates (optionally, for wet deposition calculations), and time of day and year, may be of arbitrary time increment (usually an hour) and are entered into the model through an external meteorological data file. Optionally, users may specify diffusivities and upper boundary conditions for each time increment. Source emission rates may be constant or modulated on a daily, weekly, and/or seasonal basis.

c. *Output*

Output from WYNDvalley includes gridded contour maps of the highest pollutant concentrations at each time step and the highest and second-highest 24-hour average concentrations. Output also includes the deposition patterns for wet, dry, and total fluxes of

the pollutants to the surface, integrated over the simulation period. A running ''movie'' of the concentration patterns is displayed on the screen (with optional printout) as they evolve during the simulation. Output files include tables of daily-averaged pollutant concentrations at every modeled grid cell, and of hourly concentrations at up to eight specified receptors. Statistical analyses are performed on the hourly and daily data to estimate the probabilities that specified levels will be exceeded more than once during an arbitrary number of days with similar weather.

d. *Type of Model*

WYNDvalley is a three dimensional Eulerian grid model.

e. *Pollutant Types*

WYNDvalley may be used to model any inert pollutant.

f. *Source-Receptor Relationships*

Source and receptors may be located anywhere within the user-defined modeling domain. All point and area sources, or portions of an area source, within a given grid cell are summed to define a representative emission rate for that cell. Concentrations are calculated for each and every grid cell in the modeling domain. Up to eight grid cells may be selected as receptors, for which time histories of concentration and deposition fluxes are determined, and probabilities of exceedance are calculated.

g. *Plume Behavior*

Emissions for buoyant point sources are placed by the user in a grid cell which best reflects the expected effective plume height during stagnation conditions. Five vertical layers are available to the user.

h. *Horizontal Winds*

During each time step in the model, the winds are assumed to be uniform throughout the modeling domain. Numerical diffusion is minimized in the advection algorithm. To account for terrain effects on winds and dispersion, an ad hoc algorithm is employed in the model to distribute concentrations near boundaries.

i. *Vertical Wind Speed*

Winds are assumed to be constant with height.

j. *Horizontal Dispersion*

Horizontal eddy diffusion coefficients may be entered explicitly by the user at every time step. Alternatively, a default algorithm may be invoked to estimate these coefficients from the wind velocities and their variances.

k. *Vertical Dispersion*

Vertical eddy diffusion coefficients and a top-of-model boundary condition y be entered explicitly by the user at every time step. Alternatively, a default algorithm may be invoked to estimate these coefficients from the horizontal wind velocities and their variances, and from an empirical time-of-day correction derived from temperature gradient measurements and Monin-Obukhov similarities.

l. *Chemical Transformation*

Chemical transformation is not explicitly treated by WYNDvalley.

m. *Physical Removal*

WYNDvalley optionally simulates both wet and dry deposition. Dry deposition is proportional to concentration in the lowest layer, while wet deposition is proportional to rain rate and concentration in each layer. Appropriate coefficients (deposition velocities and washout ratios) are input by the user.

n. *Evaluation Studies*

Harrison, H., G. Pade, C. Bowman and R. Wilson, 1990. Air Quality During Stagnations: A Comparison of RAM and WYNDvalley with PM–10 Measurements at Five Sites. *Journal of the Air & Waste Management Association*, 40: 47–52.

Yoshida, C., 1990. A Comparison of WYNDvalley Versions 2.12 and 3.0 with PM–10 Measurements in Six Cities in the Pacific Northwest, Lane Regional Air Pollution Authority, Springfield, OR.

Maykut, N. et al., 1990. Evaluation of the Atmospheric Deposition of Toxic Contaminants to Puget Sound, State of Washington, Puget Sound Water Quality Authority, Seattle, WA.

B.31 DENSE GAS DISPERSION MODEL (DEGADIS)

Reference

Environmental Protection Agency, 1989. User's Guide for the DEGADIS 2.1—Dense Gas Dispersion Model. EPA Publication No. EPA–450/4–89–019. U.S. Environmental Protection Agency, Research Triangle Park, NC 27711. (NTIS No. PB 90–213893)

Availability

The model code is only available on the Support Center for Regulatory Air Models Bulletin Board System (see page B–1).

Abstract

DEGADIS 2.1 is a mathematical dispersion model that can be used to model the transport of toxic chemical releases into the atmosphere. Its range of applicability includes continuous, instantaneous, finite duration,

and time-variant releases; negatively-buoyant and neutrally-buoyant releases; ground-level, low-momentum area releases; ground-level or elevated upwardly-directed stack releases of gases or aerosols. The model simulates only one set of meteorological conditions, and therefore should not be considered applicable over time periods much longer than 1 or 2 hours. The simulations are carried out over flat, level, unobstructed terrain for which the characteristic surface roughness is not a significant fraction of the depth of the dispersion layer. The model does not characterize the density of aerosol-type releases; rather, the user must assess that independently prior to the simulation.

a. *Recommendations for Regulatory Use*

DEGADIS can be used as a refined modeling approach to estimate short-term ambient concentrations (1-hour or less averaging times) and the expected area of exposure to concentrations above specified threshold values for toxic chemical releases. It is especially useful in situations where density effects are suspected to be important and where screening estimates of ambient concentrations are above levels of concern.

b. *Input Requirements*

Data may be input directly from an external input file or via keyboard using an interactive program module. The model is not set up to accept real-time meteorological data or convert units of input values. Chemical property data must be input by the user. Such data for a few selected species are available within the model. Additional data may be added to this data base by the user.

Source data requirements are: Emission rate and release duration; emission chemical and physical properties (molecular weight, density vs. concentration profile in the case of aerosol releases, and contaminant heat capacity in the case of a nonisothermal gas release; stack parameters (i.e., diameter, elevation above ground level, temperature at release point).

Meteorological data requirements are: Wind speed at designated height above ground, ambient temperature and pressure, surface roughness, relative humidity, and ground surface temperature (which in most cases can be adequately approximated by the ambient temperature).

Receptor data requirements are: Averaging time of interest, above-ground height of receptors, and maximum distance between receptors (since the model computes downwind receptor distances to optimize model performance, this parameter is used only for nominal control of the output listing, and is of secondary importance). No indoor concentrations are calculated by the model.

c. *Output*

Printed output includes in tabular form:

- Listing of model input data;
- Plume centerline elevation, mole fraction, concentration, density, and temperature at each downwind distance;
- σ_y and σ_z values at each downwind distance;
- Off-centerline distances to 2 specified concentration values at a specified receptor height at each downwind distance (these values can be used to draw concentration isopleths after model execution);
- Concentration vs. time histories for finite-duration releases (if specified by user).

The output print file is automatically saved and must be sent to the appropriate printer by the user after program execution.

No graphical output is generated by the current version of this program.

d. *Type of Model*

DEGADIS estimates plume rise and dispersion for vertically-upward jet releases using mass and momentum balances with air entrainment based on laboratory and field-scale data. These balances assume Gaussian similarity profiles for velocity, density, and concentration within the jet. Ground-level denser-than-air phenomena is treated using a power law concentration distribution profile in the vertical and a hybrid top hat-Gaussian concentration distribution profile in the horizontal. A power law specification is used for the vertical wind profile. Ground-level cloud slumping phenomena and air entrainment are based on laboratory measurements and field-scale observations.

e. *Pollutant Types*

Neutrally- or negatively-buoyant gases and aerosols. Pollutants are assumed to be non-reactive and non-depositing.

f. *Source-Receptor Relationships*

Only one source can be modeled at a time.

There is no limitation to the number of receptors; the downwind receptor distances are internally-calculated by the model. The DEGADIS calculation is carried out until the plume centerline concentration is 50% below the lowest concentration level specified by the user.

The model contains no modules for source calculations or release characterization.

g. *Plume Behavior*

Jet/plume trajectory is estimated from mass and momentum balance equations. Surrounding terrain is assumed to be flat, and stack tip downwash, building wake effects, and fumigation are not treated.

h. *Horizontal Winds*

Constant logarithmic velocity profile which accounts for stability and surface roughness is used.

The wind speed profile exponent is determined from a least squares fit of the logarithmic profile from ground level to the wind speed reference height. Calm winds can be simulated for ground-level low-momentum releases.

Along-wind dispersion of transient releases is treated using the methods of Colenbrander (1980) and Beals (1971).

i. *Vertical Wind Speed*

Not treated.

j. *Horizontal Dispersion*

When the plume centerline is above ground level, horizontal dispersion coefficients are based upon Turner (1969) and Slade (1968) with adjustments made for averaging time and plume density.

When the plume centerline is at ground level, horizontal dispersion also accounts for entrainment due to gravity currents as parameterized from laboratory experiments.

k. *Vertical Dispersion*

When the plume centerline is above ground level, vertical dispersion coefficients are based upon Turner (1969) and Slade (1968). Perfect ground reflection is applied.

In the ground-level dense-gas regime, vertical dispersion is also based upon results from laboratory experiments in density-stratified fluids.

l. *Chemical Transformation*

Not specifically treated.

m. *Physical Removal*

Not treated.

n. *Evaluation Studies*

Spicer, T. O. and J. A. Havens, 1986. Development of Vapor Dispersion Models for Non-neutrally Buoyant Gas Mixtures—Analysis of USAF/N_2O_4 Test Data. USAF Engineering and Services Laboratory, Final Report ESL–TR–86–24.

Spicer, T.O. and J.A. Havens, 1988. Development of Vapor Dispersion Models for Non-neutrally Buoyant Gas Mixtures—Analysis of TFI/NH_3 Test Data. USAF Engineering and Services Laboratory, Final Report.

o. *Operating Information*

The model requires either a VAX computer or an IBM®—compatible PC for its execution.

The model currently does not require supporting software. A FORTRAN compiler is required to generate program executables in the VAX computing environment. PC executables are provided within the source code; however, a PC FORTRAN compiler may be used to tailor a PC executable to the user's PC environment.

B.32 HGSYSTEM: DISPERSION MODELS FOR IDEAL GASES AND HYDROGEN FLUORIDE

References

Post, L. (ed.), 1994. HGSYSTEM 3.0 Technical Reference Manual. Shell Research Limited, Thornton Research Centre, Chester, United Kingdom. (TNER 94.059)

Post, L., 1994. HGSYSTEM 3.0 User's Manual. Shell Research Limited, Thornton Research Centre, Chester, United Kingdom. (TNER 94.058)

Availability

The PC-DOS version of the HGSYSTEM software (HGSYSTEM: Version 3.0, Programs for modeling the dispersion of ideal gas and hydrogen fluoride releases, executable programs and source code can be installed from floppy diskettes. These diskettes and all documentation are available as a package from API [(202) 682–8340] or NTIS (see Section B.0).

Technical Contacts

Doug N. Blewitt, AMOCO Corporation, 1670 Broadway / MC 2018, Denver, CO 80201, (303) 830–5312

Howard J. Feldman, American Petroleum Institute, 1220 L Street, Northwest, Washington, D.C. 20005, (202) 682–8340

Abstract

HGSYSTEM is a PC-based software package consisting of mathematical models for estimating of one or more consecutive phases between spillage and near-field and far-field dispersion of a pollutant. The pollutant can be either a two-phase, multi-compound mixture of non-reactive compounds or hydrogen fluoride (HF) with chemical reactions. The individual models are:

Database program:
- DATAPROP generates physical properties used in other HGSYSTEM models

Source term models:
- SPILL transient liquid release from a pressurized vessel
- HFSPILL SPILL version specifically for HF
- LPOOL evaporating multi-compound liquid pool model

Near-field dispersion models:
- AEROPLUME high-momentum jet dispersion model
- HFPLUME AEROPLUME version specifically for HF
- HEGABOX dispersion of instantaneous heavy gas releases

Far-field dispersion models:
- HEGADAS(S,T) heavy gas dispersion (steady-state and transient version)

PGPLUME passive Gaussian dispersion

Utility programs:

HFFLASH flashing of HF from pressurized vessel

POSTHS/POSTHT post-processing of HEGADAS(S,T) results

PROFILE post-processor for concentration contours of airborne plumes

GET2COL utility for data retrieval

The models assume flat, unobstructed terrain. HGSYSTEM can be used to model steady-state, finite-duration, instantaneous and time dependent releases, depending on the individual model used. The models can be run consecutively, with relevant data being passed on from one model to the next using link files. The models can be run in batch mode or using an iterative utility program.

a. Recommendations for Regulatory Use

HGSYSTEM can be used as a refined model to estimate short-term ambient concentrations. For toxic chemical releases (non-reactive chemicals or hydrogen fluoride; 1-hour or less averaging times) the expected area of exposure to concentrations above specified threshold values can be determined. For flammable non-reactive gases it can be used to determine the area in which the cloud may ignite.

b. Input Requirements

1. HFSPILL input data: reservoir data (temperature, pressure, volume, HF mass, mass-fraction water), pipe-exit diameter and ambient pressure.

2. EVAP input data: spill rate, liquid properties, and evaporation rate (boiling pool) or ambient data (non-boiling pool).

3. HFPLUME and PLUME input data: reservoir characteristics, pollutant parameters, pipe/release data, ambient conditions, surface roughness and stability class.

4. HEGADAS input data: ambient conditions, pollutant parameters, pool data or data at transition point, surface roughness, stability class and averaging time.

5. PGPLUME input data: link data provided by HFPLUME and the averaging time.

c. Output

1. The HGSYSTEM models contain three post-processor programs which can be used to extract modeling results for graphical display by external software packages. GET2COL can be used to extract data from the model output files. HSPOST can be used to develop isopleths, extract any 2 parameters for plotting and correct for finite release duration. HTPOST can be used to produce time history plots.

2. HFSPILL output data: reservoir mass, spill rate, and other reservoir variables as a function of time. For HF liquid, HFSPILL generates link data to HFPLUME for the initial phase of choked liquid flow (flashing jet), and link data to EVAP for the subsequent phase of unchoked liquid flow (evaporating liquid pool).

3. EVAP output data: pool dimensions, pool evaporation rate, pool mass and other pool variables for steady state conditions or as a function of time. EVAP generates link data to the dispersion model HEGADAS (pool dimensions and pool evaporation rate).

4. HFPLUME and PLUME output data: plume variables (concentration, width, centroid height, temperature, velocity, etc.) as a function of downwind distance.

5. HEGADAS output data: concentration variables and temperature as a function of downwind distance and (for transient case) time.

6. PGPLUME output data: concentration as a function of downwind distance, crosswind distance and height.

d. Type of Model

HGSYSTEM is made up of four types of dispersion models. HFPLUME and PLUME simulate the near-field dispersion and PGPLUME simulates the passive-gas dispersion downwind of a transition point. HEGADAS simulates the ground-level heavy-gas dispersion.

e. Pollutant Types

HGSYSTEM may be used to model non-reactive chemicals or hydrogen fluoride.

f. Source-Receptor Relationships

HGSYSTEM estimates the expected area of exposure to concentrations above user-specified threshold values. By imposing conservation of mass, momentum and energy the concentration, density, speed and temperature are evaluated as a function of downwind distance.

g. Plume Behavior

1. HFPLUME and PLUME: (1) are steady-state models assuming a top-hat profile with cross-section averaged plume variables; and (2) the momentum equation is taken into account for horizontal ambient shear, gravity, ground collision, gravity-slumping pressure forces and ground-surface drag.

2. HEGADAS: assumes the heavy cloud to move with the ambient wind speed, and adopts a power-law fit of the ambient wind speed for the velocity profile.

3. PGPLUME: simulates the passive-gas dispersion downwind of a transition point from HFPLUME or PLUME for steady-state and finite duration releases.

h. Horizontal Winds

A power law fit of the ambient wind speed is used.

i. Vertical Wind Speed

Not treated.

j. Horizontal Dispersion

1. HFPLUME and PLUME: Plume dilution is caused by air entrainment resulting from high plume speeds, trailing vortices in wake of falling plume (before touchdown), ambient turbulence and density stratification. Plume dispersion is assumed to be steady and momentum-dominated, and effects of downwind diffusion and wind meander (averaging time) are not taken into account.

2. HEGADAS: This model adopts a concentration similarity profile expressed in terms of an unknown center-line ground-level concentration and unknown vertical/cross-wind dispersion parameters. These quantities are determined from a number of basic equations describing gas-mass conservation, air entrainment (empirical law describing vertical top-entrainment in terms of global Richardson number), cross-wind gravity spreading (initial gravity spreading followed by gravity-current collapse) and cross-wind diffusion (Briggs formula).

3. PGPLUME: It assumes a Gaussian concentration profile in which the cross-wind and vertical dispersion coefficients are determined by empirical expressions. All unknown parameters in this profile are determined by imposing appropriate matching criteria at the transition point.

k. Vertical Dispersion

See description above.

l. Chemical Transformation

Not treated.

m. Physical Removal

Not treated.

n. Evaluation Studies

1. PLUME has been validated against field data for releases of liquified propane, and wind tunnel data for buoyant and vertically-released dense plumes. HFPLUME and PLUME have been validated against field data for releases of HF (Goldfish experiments) and propane releases. In addition, the plume rise algorithms have been tested against Hoot, Meroney, and Peterka, Ooms and Petersen databases. HEGADAS has been validated against steady and transient releases of liquid propane and LNG over water (Maplin Sands field data), steady and finite-duration pressurized releases of HF (Goldfish experiments; linked with HFPLUME), instantaneous release of Freon (Thorney Island field data; linked with the box model HEGABOX) and wind tunnel data for steady, isothermal dispersion.

2. Validation studies are contained in the following references:

McFarlane, K., Prothero, A., Puttock, J.S., Roberts, P.T. and Witlox, H.W.M., 1990. Development and validation of atmospheric dispersion models for ideal gases and hydrogen fluoride, Part I: Technical Reference Manual. Report TNER.90.015. Thornton Research Centre, Shell Research, Chester, England. [EGG 1067–2151] (NTIS No. DE 93–000953)

Witlox, H.W.M., McFarlane, K., Rees, F.J., and Puttock, J.S., 1990. Development and validation of atmospheric dispersion models for ideal gases and hydrogen fluoride, Part II: HGSYSTEM Program User's Manual. Report TNER.90.016. Thornton Research Centre, Shell Research, Chester, England. [EGG 1067–2152] (NTIS No. DE 93–000954)

B.33 SLAB

Reference

Ermak, D.L., 1990. User's Manual for SLAB: An Atmospheric Dispersion Model for Denser-than-Air Releases (UCRL-MA–105607), Lawrence Livermore National Laboratory.

Availability

1. The computer code is available on the Support Center for Regulatory Air Models Bulletin Board System (Upload/Download Area; see page B–1), and can also be obtained from: Energy Science and Technology Center, P.O. Box 1020, Oak Ridge, TN 37830, (615) 576–2606.

2. The User's Manual (NTIS No. DE 91–008443) can be obtained from: Computer Products, National Technical Information Service, U.S. Department of Commerce, Springfield, VA 22161, (703) 487–4650.

Abstract

The SLAB model is a computer model, PC-based, that simulates the atmospheric dispersion of denser-than-air releases. The types of releases treated by the model include a ground-level evaporating pool, an elevated horizontal jet, a stack or elevated vertical jet and an instantaneous volume source. All sources except the evaporating pool may be characterized as aerosols. Only one type of release can be processed in any individual simulation. Also, the model simulates only one set of meteorological conditions; therefore direct application of the model over time periods longer than one or two hours is not recommended.

a. Recommendations for Use

The SLAB model should be used as a refined model to estimate spatial and temporal distribution of short-term ambient concentration (e.g., 1-hour or less averaging times) and the expected area of exposure to

concentrations above specified threshold values for toxic chemical releases where the release is suspected to be denser than the ambient air.

b. Input Requirements

1. The SLAB model is executed in the batch mode. Data are input directly from an external input file. There are 29 input parameters required to run each simulation. These parameters are divided into 5 categories by the user's guide: source type, source properties, spill properties, field properties, and meteorological parameters. The model is not designed to accept real-time meteorological data or convert units of input values. Chemical property data are not available within the model and must be input by the user. Some chemical and physical property data are available in the user's guide.

2. Source type is chosen as one of the following: evaporating pool release, horizontal jet release, vertical jet or stack release, or instantaneous or short duration evaporating pool release.

3. Source property data requirements are physical and chemical properties (molecular weight, vapor heat capacity at constant pressure; boiling point; latent heat of vaporization; liquid heat capacity; liquid density; saturation pressure constants), and initial liquid mass fraction in the release.

4. Spill properties include: source temperature, emission rate, source dimensions, instantaneous source mass, release duration, and elevation above ground level.

5. Required field properties are: desired concentration averaging time, maximum downwind distance (to stop the calculation), and four separate heights at which the concentration calculations are to be made.

6. Meteorological parameter requirements are: ambient measurement height, ambient wind speed at designated ambient measurement height, ambient temperature, surface roughness, relative humidity, atmospheric stability class, and inverse Monin-Obukhov length (optional, only used as an input parameter when stability class is unknown).

c. Output

1. No graphical output is generated by the current version of this program. The output print file is automatically saved and must be sent to the appropriate printer by the user after program execution. Printed output includes in tabular form:

2. Listing of model input data;

3. Instantaneous spatially-averaged cloud parameters—time, downwind distance, magnitude of peak concentration, cloud dimensions (including length for puff-type simulations), volume (or mole) and mass fractions, downwind velocity, vapor mass fraction, density, temperature, cloud velocity, vapor fraction, water content, gravity flow velocities, and entrainment velocities;

4. Time-averaged cloud parameters—parameters which may be used externally to calculate time-averaged concentrations at any location within the simulation domain (tabulated as functions of downwind distance);

5. Time-averaged concentration values at plume centerline and at five off-centerline distances (off-centerline distances are multiples of the effective cloud half-width, which varies as a function of downwind distance) at four user-specified heights and at the height of the plume centerline.

d. Type of Model

As described by Ermak (1989), transport and dispersion are calculated by solving the conservation equations for mass, species, energy, and momentum, with the cloud being modeled as either a steady-state plume, a transient puff, or a combination of both, depending on the duration of the release. In the steady-state plume mode, the crosswind-averaged conservation equations are solved and all variables depend only on the downwind distance. In the transient puff mode, the volume-averaged conservation equations are solved, and all variables depend only on the downwind travel time of the puff center of mass. Time is related to downwind distance by the height-averaged ambient wind speed. The basic conservation equations are solved via a numerical integration scheme in space and time.

e. Pollutant Types

Pollutants are assumed to be non-reactive and non-depositing dense gases or liquid-vapor mixtures (aerosols). Surface heat transfer and water vapor flux are also included in the model.

f. Source-Receptor Relationships

1. Only one source can be modeled at a time.

2. There is no limitation to the number of receptors; the downwind receptor distances are internally-calculated by the model. The SLAB calculation is carried out up to the user-specified maximum downwind distance.

3. The model contains submodels for the source characterization of evaporating pools, elevated vertical or horizontal jets, and instantaneous volume sources.

g. Plume Behavior

Plume trajectory and dispersion is based on crosswind-averaged mass, species, energy, and momentum balance equations. Surrounding terrain is assumed to be flat and of uniform surface roughness. No obstacle or building effects are taken into account.

h. Horizontal Winds

A power law approximation of the logarithmic velocity profile which accounts for stability and surface roughness is used.

i. Vertical Wind Speed

Not treated.

j. Vertical Dispersion

The crosswind dispersion parameters are calculated from formulas reported by Morgan et al. (1983), which are based on experimental data from several sources. The formulas account for entrainment due to atmospheric turbulence, surface friction, thermal convection due to ground heating, differential motion between the air and the cloud, and damping due to stable density stratification within the cloud.

k. Horizontal Dispersion

The horizontal dispersion parameters are calculated from formulas similar to those described for vertical dispersion, also from the work of Morgan, et al. (1983).

l. Chemical Transformation

The thermodynamics of the mixing of the dense gas or aerosol with ambient air (including water vapor) are treated. The relationship between the vapor and liquid fractions within the cloud is treated using the local thermodynamic equilibrium approximation. Reactions of released chemicals with water or ambient air are not treated.

m. Physical Removal

Not treated.

n. Evaluation Studies

Blewitt, D.N., J.F. Yohn, and D.L. Ermak, 1987. An Evaluation of SLAB and DEGADIS Heavy Gas Dispersion Models Using the HF Spill Test Data, Proceedings, AIChE International Conference on Vapor Cloud Modeling, Boston, MA, November, pp. 56–80.

Ermak, D.L., S.T. Chan, D.L. Morgan, and L.K. Morris, 1982. A Comparison of Dense Gas Dispersion Model Simulations with Burro Series LNG Spill Test Results, *J. Haz. Matls.*, 6: 129–160.

Zapert, J.G., R.J. Londergan, and H. Thistle, 1991. Evaluation of Dense Gas Simulation Models. EPA Publication No. EPA–450/4–90–018. U.S. Environmental Protection Agency, Research Triangle Park, NC.

B. REF REFERENCES

American Society of Mechanical Engineers, 1968. Recommended Guide for the Prediction of Airborne Effluents. American Society of Mechanical Engineers, New York, NY.

American Society of Mechanical Engineers, 1979. Recommended Guide for the Prediction of Airborne Effluents, Third Edition. American Society of Mechanical Engineers, New York, NY.

Atkinson, R., A. C. Lloyd, and L. Winges, 1982. An Updated Chemical Mechanism for Hydrocarbon/NO_x/SO_x Photooxidation Suitable for Inclusion in Atmospheric Simulation Models. Atmospheric Environment, 16: 1341–1355.

Bjorklund, J. R., and J. F. Bowers, 1982. User's Instructions for the SHORTZ and LONGZ Computer Programs. EPA Publication No. EPA–903/9–82–004a and b. U.S. Environmental Protection Agency, Region III, Philadelphia, PA.

Briggs, G. A., 1969. Plume Rise. U.S. Atomic Energy Commission Critical Review Series, Oak Ridge National Laboratory, Oak Ridge, TN. (NTIS No.TID–25075)

Briggs, G. A., 1971. Some Recent Analyses of Plume Rise Observations. Proceedings of the Second International Clean Air Congress, edited by H. M. Englund and W. T. Berry. Academic Press, New York, NY.

Briggs, G. A., 1972. Discussion on Chimney Plumes in Neutral and Stable Surroundings. Atmospheric Environment, 6: 507–510.

Briggs, G. A., 1974. Diffusion Estimation for Small Emissions. USAEC Report ATDL–106. U.S. Atomic Energy Commission, Oak Ridge, TN.

Briggs, G. A., 1975. Plume Rise Predictions. Lectures on Air Pollution and Environmental Impact Analyses. American Meteorological Society, Boston, MA, pp. 59–111.

Briggs, G. A., 1984. Plume Rise and Buoyancy Effects. Atmospheric Science and Power Production, Darryl Randerson (Ed.). DOE Report DOE/TIC–27601, Technical Information Center, Oak Ridge, TN. (NTIS No. DE84005177)

Carpenter, S. B., T. L. Montgomery, J. M. Leavitt, W. C. Colbaugh, and F. W. Thomas, 1971. Principal Plume Dispersion Models: TVA Power Plants. Journal of Air Pollution Control Association, 21: 491–495.

Chock, D. P., 1980. User's Guide for the Simple Line-Source Model for Vehicle Exhaust Dispersion Near a Road. Environmental Science Department, General Motors Research Laboratories, Warren, MI.

Cramer, H. E., H. V. Geary, and J. F. Bowers, 1975. Diffusion-Model Calculation of Long-term and Short-term Ground-level SO_2 Concentrations in Alleghaney County, Pennsylvania. EPA Publication No. EPA–903/9–75–018. U.S. Environmental Protection Agency, Region III, Philadelphia, PA.

DeMarrais, G. A., 1959. Wind Speed Profiles at Brookhaven National Laboratory. Journal of Applied Meteorology, 16: 181–189.

Durbin, P. A., T. A. Hecht, and G. Z. Whitten, 1975. Mathematical Modeling of Simulated Photochemical Smog. EPA Publication No. EPA–600/4–75–026. U.S.Environmental Protection Agency, Research Triangle Park, NC.

Eschenroeder, A. Q., 1972. Evaluation of a Diffusion Model for Photochemical Smog Simulation. EPA Publication No. EPA–R4–73–012. U.S. Environmental Protection Agency, Research Triangle Park, NC.

Environmental Research and Technology, Inc., 1980. User's Guide for RTDM.WC A''Worst Case'' Version of the ERT Rough Terrain Model. ERT Document M–0186000R. Environmental Research and Technology, 696 Virginia Road, Concord, MA.

Gifford, F. A. and S. R. Hanna, 1970. Urban Air Pollution Modeling. Proceedings of the Second International Clean Air Congress, Academic Press, Washington, D.C.; pp. 140–1151.

Gifford, F. A., 1975. Atmospheric Dispersion Models for Environmental Pollution Applications. Lectures on Air Pollution and Environmental Impact Analyses. American Meteorological Society, Boston, MA.

Goodin, W. R., G. J. McRae, and J. H. Seinfeld, 1980. An Objective Analysis Technique for Constructing Three-Dimensional Urban-Scale Wind Fields. Journal of Applied Meteorology, 19: 98–108.

Hecht, T. A., and J. H. Seinfeld, 1974. Further Development of Generalized Kinetic Mechanism for Photochemical Smog. Environmental Science and Technology, 8(4): 327–339.

Heffter, J. L., 1965. The Variations of Horizontal Diffusion Parameters with Time for Travel Periods of One Hour or Longer. Journal of Applied Meteorology, 4: 153–156.

Heffter, J. L., 1980. Air Resources Laboratories Atmospheric Transport and Dispersion Model (ARL-ATAD). NOAA Technical Memorandum ERL ARL–81. Air Resources Laboratories, Silver Spring, MD.

Irwin, J. S., 1979. Estimating Plume Dispersion—A Recommended Generalized Scheme. Fourth Symposium on Turbulence, Diffusion and Air Pollution, Reno, NV.

Larsen, R. I., 1971. A Mathematical Model for Relating Air Quality Measurements to Air Quality Standards. Office of Air Programs Publication No. AP–89. U.S. Environmental Protection Agency, Research Triangle Park, NC.

McElroy, J. L. and F. Pooler, 1968. St. Louis Dispersion Study, Volume II—Analyses. NAPCA Publication No. AP–53. National Air Pollution Control Administration, Arlington, VA.

Mitchell, Jr., A. E. and K. O. Timbre, 1979. Atmospheric Stability Class from Horizontal Wind Fluctuation. Presented at the 72nd Annual Meeting of the Air Pollution Control Association, Cincinnati, OH.

Moore, G. E., T. E. Stoeckenius and D. A. Stewart, 1982. A Survey of Statistical Measures of Model Performance and Accuracy for Several Air Quality Models. EPA Publication No. EPA–450/4–83–001. U.S. Environmental Protection Agency, Research Triangle Park, NC.

Mueller, S. F. and R. J. Valente, 1983. Meteorological Data Preprocessing Manual for the Air Resources Regional Pollution Assessment Model (Generic Version). TVA/ONR/AQB–83/13. Tennessee Valley Authority, Muscle Shoals, Al.

Mueller, S. F., R. J. Valente, T. L. Crawford, A. L. Sparks, and L. L. Gautney, Jr., 1983. Description of the Air Resources Regional Pollution Assessment (ARRPA) Model: September 1983. TVA/ONR/AQB–83/14. Tennessee Valley Authority, Muscle Shoals, AL.

Myers, T. C., and J. E. Langstaff, 1981. Application of Meteorological and Air Quality Modeling to the Las Vegas and Tampa Bay Areas. SAI Number 101–81EF81–108. Systems Applications, Inc., San Rafael, CA.

Pasquill, F., 1976. Atmospheric Dispersion Parameters in Gaussian Plume Modeling, Part II. EPA Publication No. EPA–600/4–76–030b. U.S. Environmental Protection Agency, Research Triangle Park, NC.

Seigneur, C., T. W. Tesche, P. M. Roth and M. K. Liu, 1983. On the Treatment of Point Source Emissions in Urban Air Quality Modeling. Atmospheric Environment, 17: 1655–1676.

Schere, K. L., and K. L. Demerjian, 1977. Calculation of Selected Photolytic Rate Constants over a Diurnal Range. EPA Publication No. EPA–600/477–015. U.S. Environmental Protection Agency, Research Triangle Park, NC.

Turner, D. B., 1964. A Diffusion Model of An Urban Area. Journal of Applied Meteorology, 3: 83–91.

Turner, D. B., 1969. Workbook of Atmospheric Dispersion Estimates. PHS Publication No. 999–AP–26. U.S. Environmental Protection Agency, Research Triangle Park, NC.

Venkatram, A., 1980. Dispersion From an Elevated Source in a Corrective Boundary Layer. Atmospheric Environment, 14: 1–10.

Wesely, M. L., and B. B. Hicks, 1977. Some Factors That Affect the Deposition Rates of Sulfur Dioxide and Similar Gases on Vegetation. Journal of the Air Pollution Control Association, 27: 1110-1116.

Whitten, G. Z., J. P. Killus and H. Hogo, 1980. Modeling of Simulated Photo-chemical Smog with Kinetic Mechanisms. Volume 1. Final Report. EPA Publication No. EPA–600/3–80–028a. U.S. Environmental Protection Agency, Research Triangle Park, NC.

Beals, G. A., 1971. A Guide to Local Dispersion of Air Pollutants. Air Weather Service Technical Report #214 (April 1971).

Colenbrander, G. W., 1980. A Mathematical Model for the Transient Behavior of Dense Vapor Clouds, 3rd International Symposium on Loss Prevention and Safety Promotion in the Process Industries, Basel, Switzerland.

Green, A. E., R. P. Singhal and R. Venkateswar, 1980. Analytical Extensions of the Gaussian Plume Model. Journal of the Air Pollution Control Association, 30: 773–776.

Lamb, R. G., 1978. Numerical Simulation of Dispersion from an Elevated Point Source in the Convective Boundary Layer. Atmospheric Environment, 12: 1297–1304.

MacCready, P. B., L. B. Baboolal and P. B. Lissaman, 1974. Diffusion and Turbulence Aloft Over Complex Terrain. Preprint Volume, AMS Symposium on Atmospheric Diffusion and Air Pollution, Santa Barbara, CA. American Meteorological Society, Boston, MA.

Misra, P. K., 1980. Dispersion from Tall Stacks into a Shoreline Environment. Atmospheric Environment, 14: 397–400.

Misra, P. K. and A. C. McMillan, 1980. On the Dispersion Parameters of Plumes from Tall Stacks in a Shoreline Environment. Boundary Layer Meteorology, 19: 175–185.

Misra, P. K. and S. Onlock, 1982. Modeling Continuous Fumigation of the Nanticoke Generating Station. Atmospheric Environment, 16: 479–489.

Slade, D. H., 1968. Meteorology and Atomic Energy, U.S. Atomic Energy Commission; 445 pp. (NTIS No. TID–24190)

APPENDIX C TO APPENDIX W OF PART 51—EXAMPLE AIR QUALITY ANALYSIS CHECKLIST

C.0 INTRODUCTION

This checklist recommends a standardized set of data and a standard basic level of analysis needed for PSD applications and SIP revisions. The checklist implies a level of detail required to assess both PSD increments and the NAAQS. Individual cases may require more or less information and the Regional Meteorologist should be consulted at an early stage in the development of a data base for a modeling analysis.

At pre-application meetings between source owner and reviewing authority, this checklist should prove useful in developing a concensus on the data base, modeling techniques and overall technical approach prior to the actual analyses. Such agreement will help avoid misunderstandings concerning the final results and may reduce the later need for additional analyses.

Example Air Quality Analysis Checklist[1]

1. Source location map(s) showing location with respect to:

• Urban areas.[2]
• PSD Class I areas
• Nonattainment areas[2]
• Topographic features (terrain, lakes, river valleys, etc.)[2]
• Other major existing sources[2]
• Other major sources subject to PSD requirements
• NWS meteorological observations (surface and upper air)
• On-site/local meteorological observations (surface and upper air)
• State/local/on-site air quality monitoring locations.[2]
• Plant layout on a topographic map covering a 1km radius of the source with information sufficient to determine GEP stack heights.

2. Information on urban/rural characteristics:

• Land use within 3km of source classified according to Auer (1978): Correlation of land use and cover with meteorological anomalies. Journal of Applied Meteorology, 17: 636–643.
• Population.
—>total
—>density
• Based on current guidance determination of whether the area should be addressed using urban or rural modeling methodology.

3. Emission inventory and operating/design parameters for major sources within region of significant impact of proposed site (same as required for applicant)

• Actual and allowable annual emission rates (g/s) and operating rates.[3]
• Maximum design load short-term emission rate (g/s).[3]
• Associated emissions/stack characteristics as a function of load for maximum, average, and nominal operating conditions if stack height is less than GEP or located in complex terrain. Screening analyses as footnoted on page 1 or detailed analyses, if necessary, must be employed to determine the constraining load condition (e.g., 50%, 75%, or 100% load) to be relied upon in the short-term modeling analysis.
—Location, Universal Transverse Mercators (UTM's)
—Height of stack (m) and grade level above Mean Sea Level (MSL)
—Stack exit diameter (m)
—Exit velocity (m/s)
—Exit temperature (°K)
• Area source emissions (rates, size of area, height of area source).[3]

[1] The ''Screening Procedures for Estimating the Air Quality Impact of Stationary Sources, Revised'', October 1992 (EPA–450/R–92–019), should be used as a screening tool to determine whether modeling analyses are required. Screening procedures should be refined by the user to be site/problem specific. (Available from NTIS as document EPA–450/R–92–019. NTIS number to be provided).

[2] Within 50km or distance to which source has a significant impact, whichever is less.

[3] Particulate emissions should be specified as a function of particulate diameter and density ranges.

• Location and dimensions of buildings (plant layout drawing).

—To determine GEP stack height

—To determine potential building downwash considerations for stack heights less than GEP

• Associated parameters.

—Boiler size (megawatts, pounds/hr. steam, fuel consumption, etc.)

—Boiler parameters (% excess air, boiler type, type of firing, etc.)

—Operating conditions (pollutant content in fuel, hours of operation, capacity factor, % load for winter, summer, etc.)

—Pollutant control equipment parameters (design efficiency, operation record, e.g., can it be bypassed?, etc.)

• Anticipated growth changes.

4. Air quality monitoring data:

• Summary of existing observations for latest five years (including any additional quality assured measured data which can be obtained from any state or local agency or company).[4]

• Comparison with standards.

• Discussion of background due to uninventoried sources and contributions from outside the inventoried area and description of the method used for determination of background (should be consistent with the Guideline on Air Quality Models).

5. Meteorological data:

• Five consecutive years of the most recent representative sequential hourly National Weather Service (NWS) data, or one or more years of hourly sequential on-site data.

• Discussion of meteorological conditions observed (as applied or modified for the site-specific area, i.e., identify possible variations due to difference between the monitoring site and the specific site of the source).

• Discussion of topographic/land use influences.

6. Air quality modeling analyses:

• Model each individual year for which data are available with a recommended model or model demonstrated to be acceptable on a case-by-case basis.

—Urban dispersion coefficients for urban areas

—Rural dispersion coefficients for rural areas

• Evaluate downwash if stack height is less than GEP.

• Define worst case meteorology.

• Determine background and document method.

—Long-term

—Short-term

• Provide topographic map(s) of receptor network with respect to location of all sources.

• Follow current guidance on selection of receptor sites for refined analyses.

• Include receptor terrain heights (if applicable) used in analyses.

• Compare model estimates with measurements considering the upper ends of the frequency distribution.

• Determine extent of significant impact; provide maps.

• Define areas of maximum and highest, second-highest impacts due to applicant source (refer to format suggested in Air Quality Summary Tables).

—>long-term

—>short-term

7. Comparison with acceptable air quality levels:

• NAAQS.

• PSD increments.

• Emission offset impacts if nonattainment.

8. Documentation and guidelines for modeling methodology:

• Follow guidance documents.

—>''Guideline on Air Quality Models, Revised'' (EPA–450/2–78–027R)

—>''Screening Procedures for Estimating the Air Quality Impact of Stationary Sources, Revised'' (EPA–450/R–92–019), 1992

—>''Guideline for Determination of Good Engineering Practice Stack Height (Technical Support Document for the Stack Height Regulations)'' (EPA–450/4–80–023R), 1985

—>''Ambient Monitoring Guidelines for PSD'' (EPA–450/4–87–007), 1987

—>''Requirements for Preparation, Adoption and Submittal of Implementation Plans: Approval and Promulgation of Implementation Plans'', 40 CFR Parts 40 and 51 (Prevention of Significant Deterioration), 1982

AIR QUALITY SUMMARY—FOR NEW SOURCE ALONE

[Pollutant: _____[1] _____[2] _____[2]]

	Highest	Highest 2nd high	Highest	Highest 2nd high	Annual
Concentration Due to Modeled Source (μg/m³)					
Background Concentration (μg/m³)					
Total Concentration (μg/m³)					
Receptor Distance (km) (or UTM Easting)					

[4] See footnote 2 of this checklist.

AIR QUALITY SUMMARY—FOR NEW SOURCE ALONE—Continued

[Pollutant: _____[1] _____[2] _____[2]]

	Highest	Highest 2nd high	Highest	Highest 2nd high	Annual
Receptor Direction (°) (or UTM Northing)					
Receptor Elevation (m)					
Wind Speed (m/s)					
Wind Direction (°)					
Mixing Depth (m)					
Temperature (°K)					
Stability					
Day/Month/Year of Occurrence					

Surface Air Data From _____ Surface Station Elevation (m) _____
Anemometer Height Above Local Ground Level (m) _____
Upper Air Data From _____
Period of Record Analyzed _____
Model Used _____
Recommended Model _____

[1] Use separate sheet for each pollutant (SO_2, TSP, CO, NO_x, HC, Pb, Hg, Asbestos, etc.)
[2] List all appropriate averaging periods (1-hr, 3-hr, 8-hr, 24-hr, 30-day, 90-day, etc.) for which an air quality standard exists.

AIR QUALITY SUMMARY—FOR ALL NEW SOURCES

[Pollutant: _____[1] _____[2] _____[2]]

	Highest	Highest 2nd High	Highest	Highest 2nd High	Annual
Concentration Due to Modeled Source (μg/m³)					
Background Concentration (μg/m³)					
Total Concentration (μg/m³)					
Receptor Distance (km) (or UTM Easting)					
Receptor Direction (°) (or UTM Northing)					
ptor Elevation (m)					
Wind Speed (m/s)					
Wind Direction (°)					
Mixing Depth (m)					
Temperature (°K)					
Stability					
Day/Month/Year of Occurrence					

Surface Air Data From _____ Surface Station Elevation (m) _____
Anemometer Height Above Local Ground Level (m) _____
Upper Air Data From _____
Period of Record Analyzed _____
Model Used _____
Recommended Model _____

[1] Use separate sheet for each pollutant (SO_2, TSP, CO, NO_x, HC, Pb, Hg, Asbestos, etc.)
[2] List all appropriate averaging periods (1-hr, 3-hr, 8-hr, 24-hr, 30-day, 90-day, etc.) for which an air quality standard exists.

AIR QUALITY SUMMARY—FOR ALL SOURCES

[Pollutant: _____[1] _____[2] _____[2]]

	Highest	Highest 2nd high	Highest	Highest 2nd high	Annual
Concentration Due to Modeled Source (μg/m³)					
Background Concentration (μg/m³)					
Total Concentration (μg/m³)					
Receptor Distance (km) (or UTM Easting)					
Receptor Direction (°) (or UTM Northing)					
Receptor Elevation (m)					
Wind Speed (m/s)					
Wind Direction (°)					
Mixing Depth (m)					
Temperature (°K)					
Stability					

AIR QUALITY SUMMARY—FOR ALL SOURCES—Continued

[Pollutant: _____[1] _____[2] _____[2]]

	Highest	Highest 2nd high	Highest	Highest 2nd high	Annual
Day/Month/Year of Occurrence					

Surface Air Data From _____ Surface Station Elevation (m) _____
Anemometer Height Above Local Ground Level (m) _____
Upper Air Data From _____
Period of Record Analyzed _____
Model Used _____
Recommended Model _____

[1] Use separate sheet for each pollutant (SO_2, TSP, CO, NO_x, HC, Pb, Hg, Asbestos, etc.)
[2] List all appropriate averaging periods (1-hr, 3-hr, 8-hr, 24-hr, 30-day, 90-day, etc.) for which an air quality standard exists.

STACK PARAMETERS FOR ANNUAL MODELING

Stack (m) No. length	Serving emission rate for each pollutant (g/s)	Stack exit diameter (m)	Stack exit velocity (m/s)	Stack exit temperture (°K)	Physical stack height (m)	GEP stack ht. (m)	Stack base elevation (m)	Building dimensions	
								Height	Width

STACK PARAMETERS FOR SHORT-TERM MODELING[1]

Stack (m) No. length	Serving emission rate for each pollutant (g/s)	Stack exit diameter (m)	Stack exit velocity (m/s)	Stack exit temperture (°K)	Physical stack height (m)	GEP stack ht. (m)	Stack base elevation (m)	Building dimensions	
								Height	Width

[1] Separate tables for 50%, 75%, 100% of full operating condition (and any other operating conditions as determined by screening or detailed modeling analyses to represent constraining operating conditions) should be provided.

[58 FR 38822, July 20, 1993, as amended at 60 FR 40468–40471, Aug. 9, 1995]

APPENDIX X TO PART 51—EXAMPLES OF ECONOMIC INCENTIVE PROGRAMS

I. Introduction and Purpose

This appendix contains examples of EIP's which are covered by the EIP rules. Program descriptions identify key provisions which distinguish the different model program types. The examples provide additional information and guidance on various types of regulatory programs collectively referred to as EIP's. The examples include programs involving stationary, area, and mobile sources. The definition section at 40 CFR 51.491 defines an EIP as a program which may include State established emission fees or a system

of marketable permits, or a system of State fees on sale or manufacture of products the use of which contributes to O_3 formation, or any combination of the foregoing or other similar measures, as well as incentives and requirements to reduce vehicle emissions and vehicle miles traveled in the area, including any of the transportation control measures identified in section 108(f). Such programs span a wide spectrum of program designs.

The EIP's are comprised of several elements that, in combination with each other, must insure that the fundamental principles of any regulatory program (including accountability, enforceability and noninterference with other requirements of the Act) are met. There are many possible combinations of program elements that would be acceptable. Also, it is important to emphasize that the effectiveness of an EIP is dependent upon the particular area in which it is implemented. No two areas face the same air quality circumstances and, therefore, effective strategies and programs will differ among areas.

Because of these considerations, the EPA is not specifying one particular design or type of strategy as acceptable for any given EIP. Such specific guidance would potentially discourage States (or other entities with delegated authority to administer parts of an implementation plan) from utilizing other equally viable program designs that may be more appropriate for their situation. Thus, the examples given in this Appendix are general in nature so as to avoid limiting innovation on the part of the States in developing programs tailored to individual State needs.

Another important consideration in designing effective EIP's is the extent to which different strategies, or programs targeted at different types of sources, can complement one another when implemented together as an EIP ''package.'' The EPA encourages States to consider packaging different measures together when such a strategy is likely to increase the overall benefits from the program as a whole. Furthermore, some activities, such as information distribution or public awareness programs, while not EIP's in and of themselves, are often critical to the success of other measures and, therefore, would be appropriate complementary components of a program package. All SIP emissions reductions credits should reflect a consideration of the effectiveness of the entire package.

II. Examples of Stationary and Mobile Source Economic Incentive Strategies

There is a wide variety of programs that fall under the general heading of EIP's. Further, within each general type of program are several different basic program designs. This section describes common types of EIP's that have been implemented, designed, or discussed in the literature for stationary and mobile sources. The program types discussed below do not include all of the possible types of EIP's. Innovative approaches incorporating new ideas in existing programs, different combinations of existing program elements, or wholly new incentive systems provide additional opportunities for States to find ways to meet environmental goals at lower total cost.

A. Emissions Trading Markets

One prominent class of EIP's is based upon the creation of a market in which trading of source-specific emissions requirements may occur. Such programs may include traditional rate-based emissions limits (generally referred to as emissions averaging) or overall limits on a source's total mass emissions per unit of time (generally referred to as an emissions cap). The emissions limits, which may be placed on individual emitting units or on facilities as a whole, may decline over time. The common feature of such programs is that sources have an ongoing incentive to reduce pollution and increased flexibility in meeting their regulatory requirements. A source may meet its own requirements either by directly preventing or controlling emissions or by trading or averaging with another source. Trading or averaging may occur within the same facility, within the same firm, or between different firms. Sources with lower cost abatement alternatives may provide the necessary emissions reductions to sources facing more expensive alternatives. These programs can lower the overall cost of meeting a given total level of abatement. All sources eligible to trade in an emissions market are faced with continuing incentives to find better ways of reducing emissions at the lowest possible cost, even if they are already meeting their own emissions requirements.

Stationary, area, and mobile sources could be allowed to participate in a common emissions trading market. Programs involving emissions trading markets are particularly effective at reducing overall costs when individual affected sources face significantly different emissions control costs. A wider range in control costs among affected sources creates greater opportunities for cost-reducing trades. Thus, for example, areas which face relatively high stationary source control costs relative to mobile source control costs benefit most by including both stationary and mobile sources in a single emissions trading market.

Programs involving emissions trading markets have generally been designated as either emission allowance or emission reduction credit (ERC) trading programs. The Federal Acid Rain Program is an example of an emission allowance trading program, while

''bubbles'' and ''generic bubbles'' created under the EPA's 1986 Emission Trading Policy Statement are examples of ERC trading. Allowance trading programs can establish emission allocations to be effective at the start of a program, at some specific time in the future, or at varying levels over time. An ERC trading program requires ERC's to be measured against a pre-established emission baseline. Allowance allocations or emission baselines can be established either directly by the EIP rules or by reference to traditional regulations (e.g., RACT requirements). In either type of program, sources can either meet their EIP requirements by maintaining their own emissions within the limits established by the program, or by buying surplus allowances or ERC's from other sources. In any case, the State will need to establish adequate enforceable procedures for certifying and tracking trades, and for monitoring and enforcing compliance with the EIP.

The definition of the commodity to be traded and the design of the administrative procedures the buyer and seller must follow to complete a trade are obvious elements that must be carefully selected to help ensure a successful trading market that achieves the desired environmental goal at the lowest cost. An emissions market is defined as efficient if it achieves the environmental goal at the lowest possible total cost. Any feature of a program that unnecessarily increases the total cost without helping achieve the environmental goals causes market inefficiency. Thus, the design of an emission trading program should be evaluated not only in terms of the likelihood that the program design will ensure that the environmental goals of the program will be met, but also in terms of the costs that the design imposes upon market transactions and the impact of those costs on market efficiency.

Transaction costs are the investment in time and resources to acquire information about the price and availability of allowances or ERC's, to negotiate a trade, and to assure the trade is properly recorded and legally enforceable. All trading markets impose some level of transaction costs. The level of transaction costs in an emissions trading market are affected by various aspects of the design of the market, such as the nature of the procedures for reviewing, approving, and recording trades, the timing of such procedures (i.e., before or after the trade is made), uncertainties in the value of the allowance or credit being traded, the legitimacy of the allowance or credit being offered for sale, and the long-term integrity of the market itself. Emissions trading programs in which every transaction is different, such as programs requiring significant consideration of the differences in the chemical properties or geographic location of the emissions, can result in higher transaction costs than programs with a standardized trading commodity and well-defined rules for acceptable trades. Transaction costs are also affected by the relative ease with which information can be obtained about the availability and price of allowances or credits.

While the market considerations discussed above are clearly important in designing an efficient market to minimize the transaction costs of such a program, other considerations, such as regulatory certainty, enforcement issues, and public acceptance, also clearly need to be factored into the design of any emissions trading program.

B. Fee Programs

A fee on each unit of emissions is a strategy that can provide a direct incentive for sources to reduce emissions. Ideally, fees should be set so as to result in emissions being reduced to the socially optimal level considering the costs of control and the benefits of the emissions reductions. In order to motivate a change in emissions, the fees must be high enough that sources will actively seek to reduce emissions. It is important to note that not all emission fee programs are designed to motivate sources to lower emissions. Fee programs using small fees are designed primarily to generate revenue, often to cover some of the administrative costs of a regulatory program.

There can be significant variations in emission fee programs. For example, potential emissions could be targeted by placing a fee on an input (e.g., a fee on the quantity and BTU content of fuel used in an industrial boiler) rather than on actual emissions. Sources paying a fee on potential emissions could be eligible for a fee waiver or rebate by demonstrating that potential emissions are not actually emitted, such as through a carbon absorber system on a coating operation.

Some fee program variations are designed to mitigate the potentially large amount of revenue that a fee program could generate. Although more complex than a simple fee program, programs that reduce or eliminate the total revenues may be more readily adopted in a SIP than a simple emission fee. Some programs lower the amount of total revenues generated by waiving the fee on some emissions. These programs reduce the total amount of revenue generated, while providing an incentive to decrease emissions. Alternatively, a program may impose higher per-unit fees on a portion of the emissions stream, providing a more powerful but targeted incentive at the same revenue levels. For example, fees could be collected on all emissions in excess of some fixed level. The level could be set as a percentage of a baseline (e.g., fees on emissions above some percentage of historical emissions), or as the

lowest emissions possible (e.g., fees on emissions in excess of the lowest demonstrated emissions from the source category).

Other fee programs are ''revenue neutral,'' meaning that the pollution control agency does not receive any net revenues. One way to design a revenue-neutral program is to have both a fee provision and a rebate provision. Rebates must be carefully designed to avoid lessening the incentive provided by the emission fee. For example, a rebate based on comparing a source's actual emissions and the average emissions for the source category can be designed to be revenue neutral and not diminish the incentive.

Other types of fee programs collect a fee in relation to particular activities or types of products to encourage the use of alternatives. While these fees are not necessarily directly linked to the total amount of emissions from the activity or product, the relative simplicity of a usage fee may make such programs an effective way to lower emissions. An area source example is a construction permit fee for wood stoves. Such a permit fee is directly related to the potential to emit inherent in a wood stove, and not to the actual emissions from each wood stove in use. Fees on raw materials to a manufacturing process can encourage product reformulation (e.g., fees on solvent sold to makers of architectural coatings) or changes in work practices (e.g., fees on specialty solvents and degreasing compounds used in manufacturing).

Road pricing mechanisms are fee programs that are available to curtail low occupancy vehicle use, fund transportation system improvements and control measures, spatially and temporally shift driving patterns, and attempt to effect land usage changes. Primary examples include increased peak period roadway, bridge, or tunnel tolls (this could also be accomplished with automated vehicle identification systems as well), and toll discounts for pooling arrangements and zero-emitting/low-emitting vehicles.

C. Tax Code and Zoning Provisions

Modifications to existing State or local tax codes, zoning provisions, and land use planning can provide effective economic incentives. Possible modifications to encourage emissions reductions cover a broad span of programs, such as accelerated depreciation of capital equipment used for emissions reductions, corporate income tax deductions or credits for emission abatement costs, property tax waivers based on decreasing emissions, exempting low-emitting products from sales tax, and limitations on parking spaces for office facilities. Mobile source strategies include waiving or lowering any of the following for zero- or low-emitting vehicles: vehicle registration fees, vehicle property tax, sales tax, taxicab license fees, and parking taxes.

D. Subsidies

A State may create incentives for reducing emissions by offering direct subsidies, grants or low-interest loans to encourage the purchase of lower-emitting capital equipment, or a switch to less polluting operating practices. Examples of such programs include clean vehicle conversions, starting shuttle bus or van pool programs, and mass transit fare subsidies. Subsidy programs often suffer from a variety of ''free rider'' problems. For instance, subsidies for people or firms who were going to switch to the cleaner alternative anyway lower the effectiveness of the subsidy program, or drive up the cost of achieving a targeted level of emissions reductions.

E. Transportation Control Measures

The following measures are the TCM's listed in section 108(f):

(i) Programs for improved public transit;

(ii) Restriction of certain roads or lanes to, or construction of such roads or lanes for use by, passenger buses or high occupancy vehicles;

(iii) Employer-based transportation management plans, including incentives;

(iv) Trip-reduction ordinances;

(v) Traffic flow improvement programs that achieve emission reductions;

(vi) Fringe and transportation corridor parking facilities serving multiple-occupancy vehicle programs or transit service;

(vii) Programs to limit or restrict vehicle use in downtown areas or other areas of emission concentration particularly during periods of peak use;

(viii) Programs for the provision of all forms of high-occupancy, shared-ride services;

(ix) Programs to limit portions of road surfaces or certain sections of the metropolitan area to the use of non-motorized vehicles or pedestrian use, both as to time and place;

(x) Programs for secure bicycle storage facilities and other facilities, including bicycle lanes, for the convenience and protection of bicyclists, in both public and private areas;

(xi) Programs to control extended idling of vehicles;

(xii) Programs to reduce motor vehicle emissions, consistent with title II, which are caused by extreme cold start conditions;

(xiii) Employer-sponsored programs to permit flexible work schedules;

(xiv) Programs and ordinances to facilitate non-automobile travel, provision and utilization of mass transit, and to generally reduce the need for single-occupant vehicle travel, as part of transportation planning and development efforts of a locality, including programs and ordinances applicable to new shopping centers, special events, and other centers of vehicle activity;

(xv) Programs for new construction and major reconstruction of paths, tracks or areas solely for the use by pedestrian or other non-motorized means of transportation when economically feasible and in the public interest. For purposes of this clause, the Administrator shall also consult with the Secretary of the Interior; and

(xvi) Programs to encourage the voluntary removal from use and the marketplace of pre-1980 model year light-duty vehicles and pre-1980 model light-duty trucks.

[59 FR 16715, Apr. 7, 1994]

FINDING AIDS

A list of CFR titles, subtitles, chapters, subchapters and parts and an alphabetical list of agencies publishing in the CFR are included in the CFR Index and Finding Aids volume to the Code of Federal Regulations which is published separately and revised annually.

Material Approved for Incorporation by Reference
Table of CFR Titles and Chapters
Alphabetical List of Agencies Appearing in the CFR
Redesignation Table
List of CFR Sections Affected

Material Approved for Incorporation by Reference

(Revised as of July 1, 1996)

The Director of the Federal Register has approved under 5 U.S.C. 552(a) and 1 CFR Part 51 the incorporation by reference of the following publications. This list contains only those incorporations by reference effective as of the revision date of this volume. Incorporations by reference found within a regulation are effective upon the effective date of that regulation. For more information on incorporation by reference, see the preliminary pages of this volume.

40 CFR, CHAPTER I (PART 51): SUBCHAPTER C—AIR PROGRAMS
ENVIRONMENTAL PROTECTION AGENCY

	40 CFR
Environmental Protection Agency Office of Air Quality Planning and Standards, Research Triangle Park, NC 27711	
''Guidelines for Determining Best Available Retrofit Technology for Coal-Fired Power Plants and Other Existing Stationary Facilities'', (1980), EPA 450/3–80–009b.	51.302(c)
''Guidelines on Air Quality Models (Revised)'' (1986) and Supplement A (1987), EPA 450/2–78–027R.	51.166(l)
Copies may be obtained from: National Technical Information Service, 5285 Port Royal Rd., Springfield, VA 22161.	

Table of CFR Titles and Chapters

(Revised as of June 30, 1996)

Title 1—General Provisions

I Administrative Committee of the Federal Register (Parts 1—49)
II Office of the Federal Register (Parts 50—299)
IV Miscellaneous Agencies (Parts 400—500)

Title 2—[Reserved]

Title 3—The President

I Executive Office of the President (Parts 100—199)

Title 4—Accounts

I General Accounting Office (Parts 1—99)
II Federal Claims Collection Standards (General Accounting Office—Department of Justice) (Parts 100—299)

Title 5—Administrative Personnel

I Office of Personnel Management (Parts 1—1199)
II Merit Systems Protection Board (Parts 1200—1299)
III Office of Management and Budget (Parts 1300—1399)
IV Advisory Committee on Federal Pay (Parts 1400—1499)
V The International Organizations Employees Loyalty Board (Parts 1500—1599)
VI Federal Retirement Thrift Investment Board (Parts 1600—1699)
VII Advisory Commission on Intergovernmental Relations (Parts 1700—1799)
VIII Office of Special Counsel (Parts 1800—1899)
IX Appalachian Regional Commission (Parts 1900—1999)
XI Armed Forces Retirement Home (Part 2100)
XIV Federal Labor Relations Authority, General Counsel of the Federal Labor Relations Authority and Federal Service Impasses Panel (Parts 2400—2499)
XV Office of Administration, Executive Office of the President (Parts 2500—2599)
XVI Office of Government Ethics (Parts 2600—2699)
XXI Department of the Treasury (Parts 3100—3199)
XXII Federal Deposit Insurance Corporation (Part 3202)
XXVI Department of Defense (Part 3601)

Title 5—Administrative Personnel—Continued

Chap.	
XXX	Farm Credit System Insurance Corporation (Parts 4000—4099)
XXXI	Farm Credit Administration (Parts 4100—4199)
XXXIII	Overseas Private Investment Corporation (Part 4301)
XL	Interstate Commerce Commission (Part 5001)
XLI	Commodity Futures Trading Commission (Part 5101)
XLVI	Postal Rate Commission (Part 5601)
XLVII	Federal Trade Commission (Part 5701)
XLVIII	Nuclear Regulatory Commission (Part 5801)
LII	Export-Import Bank of the United States (Part 6201)
LIII	Department of Education (Parts 6300—6399)
LIX	National Aeronautics and Space Administration (Part 6901)
LX	United States Postal Service (Part 7001)
LXII	Equal Employment Opportunity Commission (Part 7201)
LXIII	Inter-American Foundation (Part 7301)
LXIX	Tennessee Valley Authority (Part 7901)
LXXVI	Federal Retirement Thrift Investment Board (Part 8601)
LXXVII	Office of Management and Budget (Part 8701)

Title 6—[Reserved]

Title 7—Agriculture

	SUBTITLE A—Office of the Secretary of Agriculture (Parts 0—26)
	SUBTITLE B—Regulations of the Department of Agriculture
I	Agricultural Marketing Service (Standards, Inspections, Marketing Practices), Department of Agriculture (Parts 27—209)
II	Food and Consumer Service, Department of Agriculture (Parts 210—299)
III	Animal and Plant Health Inspection Service, Department of Agriculture (Parts 300—399)
IV	Federal Crop Insurance Corporation, Department of Agriculture (Parts 400—499)
V	Agricultural Research Service, Department of Agriculture (Parts 500—599)
VI	Natural Resources Conservation Service, Department of Agriculture (Parts 600—699)
VII	Farm Service Agency, Department of Agriculture (Parts 700—799)
VIII	Grain Inspection, Packers and Stockyards Administration (Federal Grain Inspection Service), Department of Agriculture (Parts 800—899)
IX	Agricultural Marketing Service (Marketing Agreements and Orders; Fruits, Vegetables, Nuts), Department of Agriculture (Parts 900—999)
X	Agricultural Marketing Service (Marketing Agreements and Orders; Milk), Department of Agriculture (Parts 1000—1199)
XI	Agricultural Marketing Service (Marketing Agreements and Orders; Miscellaneous Commodities), Department of Agriculture (Parts 1200—1299)

Title 7—Agriculture—Continued

Chap.	
XIV	Commodity Credit Corporation, Department of Agriculture (Parts 1400—1499)
XV	Foreign Agricultural Service, Department of Agriculture (Parts 1500—1599)
XVI	Rural Telephone Bank, Department of Agriculture (Parts 1600—1699)
XVII	Rural Utilities Service, Department of Agriculture (Parts 1700—1799)
XVIII	Rural Housing Service, Rural Business-Cooperative Service, Rural Utilities Service, and Farm Service Agency, Department of Agriculture (Parts 1800—2099)
XXVI	Office of Inspector General, Department of Agriculture (Parts 2600—2699)
XXVII	Office of Information Resources Management, Department of Agriculture (Parts 2700—2799)
XXVIII	Office of Operations, Department of Agriculture (Parts 2800—2899)
XXIX	Office of Energy, Department of Agriculture (Parts 2900—2999)
XXX	Office of Finance and Management, Department of Agriculture (Parts 3000—3099)
XXXI	Office of Environmental Quality, Department of Agriculture (Parts 3100—3199)
XXXII	[Reserved]
XXXIII	Office of Transportation, Department of Agriculture (Parts 3300—3399)
XXXIV	Cooperative State Research, Education, and Extension Service, Department of Agriculture (Parts 3400—3499)
XXXVI	National Agricultural Statistics Service, Department of Agriculture (Parts 3600—3699)
XXXVII	Economic Research Service, Department of Agriculture (Parts 3700—3799)
XXXVIII	World Agricultural Outlook Board, Department of Agriculture (Parts 3800—3899)
XXXIX	Economic Analysis Staff, Department of Agriculture (Parts 3900—3999)
XL	Economics Management Staff, Department of Agriculture (Parts 4000—4099)
XLI	[Reserved]
XLII	Rural Business-Cooperative Service and Rural Utilities Service, Department of Agriculture (Parts 4200—4299)

Title 8—Aliens and Nationality

I	Immigration and Naturalization Service, Department of Justice (Parts 1—499)

Title 9—Animals and Animal Products

I	Animal and Plant Health Inspection Service, Department of Agriculture (Parts 1—199)

Title 9—Animals and Animal Products—Continued

Chap.

II Grain Inspection, Packers and Stockyards Administration (Packers and Stockyards Programs), Department of Agriculture (Parts 200—299)

III Food Safety and Inspection Service, Meat and Poultry Inspection, Department of Agriculture (Parts 300—399)

Title 10—Energy

I Nuclear Regulatory Commission (Parts 0—199)

II Department of Energy (Parts 200—699)

III Department of Energy (Parts 700—999)

X Department of Energy (General Provisions) (Parts 1000—1099)

XI United States Enrichment Corporation (Parts 1100—1199)

XV Office of the Federal Inspector for the Alaska Natural Gas Transportation System (Parts 1500—1599)

XVII Defense Nuclear Facilities Safety Board (Parts 1700—1799)

Title 11—Federal Elections

I Federal Election Commission (Parts 1—9099)

Title 12—Banks and Banking

I Comptroller of the Currency, Department of the Treasury (Parts 1—199)

II Federal Reserve System (Parts 200—299)

III Federal Deposit Insurance Corporation (Parts 300—399)

IV Export-Import Bank of the United States (Parts 400—499)

V Office of Thrift Supervision, Department of the Treasury (Parts 500—599)

VI Farm Credit Administration (Parts 600—699)

VII National Credit Union Administration (Parts 700—799)

VIII Federal Financing Bank (Parts 800—899)

IX Federal Housing Finance Board (Parts 900—999)

XI Federal Financial Institutions Examination Council (Parts 1100—1199)

XIV Farm Credit System Insurance Corporation (Parts 1400—1499)

XV Thrift Depositor Protection Oversight Board (Parts 1500—1599)

XVII Office of Federal Housing Enterprise Oversight, Department of Housing and Urban Development (Parts 1700-1799)

XVIII Community Development Financial Institutions Fund, Department of the Treasury (Parts 1800—1899)

Title 13—Business Credit and Assistance

I Small Business Administration (Parts 1—199)

III Economic Development Administration, Department of Commerce (Parts 300—399)

Title 14—Aeronautics and Space

Chap.

I Federal Aviation Administration, Department of Transportation (Parts 1—199)

II Office of the Secretary, Department of Transportation (Aviation Proceedings) (Parts 200—399)

III Office of Commercial Space Transportation, Department of Transportation (Parts 400—499)

V National Aeronautics and Space Administration (Parts 1200—1299)

Title 15—Commerce and Foreign Trade

SUBTITLE A—Office of the Secretary of Commerce (Parts 0—29)

SUBTITLE B—Regulations Relating to Commerce and Foreign Trade

I Bureau of the Census, Department of Commerce (Parts 30—199)

II National Institute of Standards and Technology, Department of Commerce (Parts 200—299)

III International Trade Administration, Department of Commerce (Parts 300—399)

IV Foreign-Trade Zones Board, Department of Commerce (Parts 400—499)

VII Bureau of Export Administration, Department of Commerce (Parts 700—799)

VIII Bureau of Economic Analysis, Department of Commerce (Parts 800—899)

IX National Oceanic and Atmospheric Administration, Department of Commerce (Parts 900—999)

XI Technology Administration, Department of Commerce (Parts 1100—1199)

XIII East-West Foreign Trade Board (Parts 1300—1399)

XIV Minority Business Development Agency (Parts 1400—1499)

SUBTITLE C—Regulations Relating to Foreign Trade Agreements

XX Office of the United States Trade Representative (Parts 2000—2099)

SUBTITLE D—Regulations Relating to Telecommunications and Information

XXIII National Telecommunications and Information Administration, Department of Commerce (Parts 2300—2399)

Title 16—Commercial Practices

I Federal Trade Commission (Parts 0—999)

II Consumer Product Safety Commission (Parts 1000—1799)

Title 17—Commodity and Securities Exchanges

I Commodity Futures Trading Commission (Parts 1—199)

II Securities and Exchange Commission (Parts 200—399)

IV Department of the Treasury (Parts 400—499)

Title 18—Conservation of Power and Water Resources

Chap.

I Federal Energy Regulatory Commission, Department of Energy (Parts 1—399)

III Delaware River Basin Commission (Parts 400—499)

VI Water Resources Council (Parts 700—799)

VIII Susquehanna River Basin Commission (Parts 800—899)

XIII Tennessee Valley Authority (Parts 1300—1399)

Title 19—Customs Duties

I United States Customs Service, Department of the Treasury (Parts 1—199)

II United States International Trade Commission (Parts 200—299)

III International Trade Administration, Department of Commerce (Parts 300—399)

Title 20—Employees' Benefits

I Office of Workers' Compensation Programs, Department of Labor (Parts 1—199)

II Railroad Retirement Board (Parts 200—399)

III Social Security Administration (Parts 400—499)

IV Employees' Compensation Appeals Board, Department of Labor (Parts 500—599)

V Employment and Training Administration, Department of Labor (Parts 600—699)

VI Employment Standards Administration, Department of Labor (Parts 700—799)

VII Benefits Review Board, Department of Labor (Parts 800—899)

VIII Joint Board for the Enrollment of Actuaries (Parts 900—999)

IX Office of the Assistant Secretary for Veterans' Employment and Training, Department of Labor (Parts 1000—1099)

Title 21—Food and Drugs

I Food and Drug Administration, Department of Health and Human Services (Parts 1—1299)

II Drug Enforcement Administration, Department of Justice (Parts 1300—1399)

III Office of National Drug Control Policy (Parts 1400—1499)

Title 22—Foreign Relations

I Department of State (Parts 1—199)

II Agency for International Development, International Development Cooperation Agency (Parts 200—299)

III Peace Corps (Parts 300—399)

IV International Joint Commission, United States and Canada (Parts 400—499)

V United States Information Agency (Parts 500—599)

Title 22—Foreign Relations—Continued

Chap.

VI United States Arms Control and Disarmament Agency (Parts 600—699)

VII Overseas Private Investment Corporation, International Development Cooperation Agency (Parts 700—799)

IX Foreign Service Grievance Board Regulations (Parts 900—999)

X Inter-American Foundation (Parts 1000—1099)

XI International Boundary and Water Commission, United States and Mexico, United States Section (Parts 1100—1199)

XII United States International Development Cooperation Agency (Parts 1200—1299)

XIII Board for International Broadcasting (Parts 1300—1399)

XIV Foreign Service Labor Relations Board; Federal Labor Relations Authority; General Counsel of the Federal Labor Relations Authority; and the Foreign Service Impasse Disputes Panel (Parts 1400—1499)

XV African Development Foundation (Parts 1500—1599)

XVI Japan-United States Friendship Commission (Parts 1600—1699)

XVII United States Institute of Peace (Parts 1700—1799)

Title 23—Highways

I Federal Highway Administration, Department of Transportation (Parts 1—999)

II National Highway Traffic Safety Administration and Federal Highway Administration, Department of Transportation (Parts 1200—1299)

III National Highway Traffic Safety Administration, Department of Transportation (Parts 1300—1399)

Title 24—Housing and Urban Development

SUBTITLE A—Office of the Secretary, Department of Housing and Urban Development (Parts 0—99)

SUBTITLE B—Regulations Relating to Housing and Urban Development

I Office of Assistant Secretary for Equal Opportunity, Department of Housing and Urban Development (Parts 100—199)

II Office of Assistant Secretary for Housing-Federal Housing Commissioner, Department of Housing and Urban Development (Parts 200—299)

III Government National Mortgage Association, Department of Housing and Urban Development (Parts 300—399)

V Office of Assistant Secretary for Community Planning and Development, Department of Housing and Urban Development (Parts 500—599)

VI Office of Assistant Secretary for Community Planning and Development, Department of Housing and Urban Development (Parts 600—699) [Reserved]

VII Office of the Secretary, Department of Housing and Urban Development (Housing Assistance Programs and Public and Indian Housing Programs) (Parts 700—799)

Title 24—Housing and Urban Development—Continued

Chap.

VIII Office of the Assistant Secretary for Housing—Federal Housing Commissioner, Department of Housing and Urban Development (Section 8 Housing Assistance Programs and Section 202 Direct Loan Program) (Parts 800—899)

IX Office of Assistant Secretary for Public and Indian Housing, Department of Housing and Urban Development (Parts 900—999)

X Office of Assistant Secretary for Housing—Federal Housing Commissioner, Department of Housing and Urban Development (Interstate Land Sales Registration Program) (Parts 1700—1799)

XII Office of Inspector General, Department of Housing and Urban Development (Parts 2000—2099)

XX Office of Assistant Secretary for Housing—Federal Housing Commissioner, Department of Housing and Urban Development (Parts 3200—3699)

XXV Neighborhood Reinvestment Corporation (Parts 4100—4199)

Title 25—Indians

I Bureau of Indian Affairs, Department of the Interior (Parts 1—299)

II Indian Arts and Crafts Board, Department of the Interior (Parts 300—399)

III National Indian Gaming Commission, Department of the Interior (Parts 500—599)

IV Office of Navajo and Hopi Indian Relocation (Parts 700—799)

V Bureau of Indian Affairs, Department of the Interior, and Indian Health Service, Department of Health and Human Services (Part 900)

VI Office of the Assistant Secretary-Indian Affairs, Department of the Interior (Part 1001)

Title 26—Internal Revenue

I Internal Revenue Service, Department of the Treasury (Parts 1—799)

Title 27—Alcohol, Tobacco Products and Firearms

I Bureau of Alcohol, Tobacco and Firearms, Department of the Treasury (Parts 1—299)

Title 28—Judicial Administration

I Department of Justice (Parts 0—199)

III Federal Prison Industries, Inc., Department of Justice (Parts 300—399)

V Bureau of Prisons, Department of Justice (Parts 500—599)

VI Offices of Independent Counsel, Department of Justice (Parts 600—699)

VII Office of Independent Counsel (Parts 700—799)

Title 29—Labor

Chap.

SUBTITLE A—Office of the Secretary of Labor (Parts 0—99)

SUBTITLE B—Regulations Relating to Labor

I National Labor Relations Board (Parts 100—199)

II Office of Labor-Management Programs, Department of Labor (Parts 200—299)

III National Railroad Adjustment Board (Parts 300—399)

IV Office of Labor-Management Standards, Department of Labor (Parts 400—499)

V Wage and Hour Division, Department of Labor (Parts 500—899)

IX Construction Industry Collective Bargaining Commission (Parts 900—999)

X National Mediation Board (Parts 1200—1299)

XII Federal Mediation and Conciliation Service (Parts 1400—1499)

XIV Equal Employment Opportunity Commission (Parts 1600—1699)

XVII Occupational Safety and Health Administration, Department of Labor (Parts 1900—1999)

XX Occupational Safety and Health Review Commission (Parts 2200—2499)

XXV Pension and Welfare Benefits Administration, Department of Labor (Parts 2500—2599)

XXVI Pension Benefit Guaranty Corporation (Parts 2600—2699)

XXVII Federal Mine Safety and Health Review Commission (Parts 2700—2799)

Title 30—Mineral Resources

I Mine Safety and Health Administration, Department of Labor (Parts 1—199)

II Minerals Management Service, Department of the Interior (Parts 200—299)

III Board of Surface Mining and Reclamation Appeals, Department of the Interior (Parts 300—399)

IV Geological Survey, Department of the Interior (Parts 400—499)

VI Bureau of Mines, Department of the Interior (Parts 600—699)

VII Office of Surface Mining Reclamation and Enforcement, Department of the Interior (Parts 700—999)

Title 31—Money and Finance: Treasury

SUBTITLE A—Office of the Secretary of the Treasury (Parts 0—50)

SUBTITLE B—Regulations Relating to Money and Finance

I Monetary Offices, Department of the Treasury (Parts 51—199)

II Fiscal Service, Department of the Treasury (Parts 200—399)

IV Secret Service, Department of the Treasury (Parts 400—499)

V Office of Foreign Assets Control, Department of the Treasury (Parts 500—599)

VI Bureau of Engraving and Printing, Department of the Treasury (Parts 600—699)

Title 31—Money and Finance: Treasury—Continued

Chap.

VII Federal Law Enforcement Training Center, Department of the Treasury (Parts 700—799)

VIII Office of International Investment, Department of the Treasury (Parts 800—899)

Title 32—National Defense

SUBTITLE A—Department of Defense

I Office of the Secretary of Defense (Parts 1—399)

V Department of the Army (Parts 400—699)

VI Department of the Navy (Parts 700—799)

VII Department of the Air Force (Parts 800—1099)

SUBTITLE B—Other Regulations Relating to National Defense

XII Defense Logistics Agency (Parts 1200—1299)

XVI Selective Service System (Parts 1600—1699)

XIX Central Intelligence Agency (Parts 1900—1999)

XX Information Security Oversight Office, National Archives and Records Administration (Parts 2000—2099)

XXI National Security Council (Parts 2100—2199)

XXIV Office of Science and Technology Policy (Parts 2400—2499)

XXVII Office for Micronesian Status Negotiations (Parts 2700—2799)

XXVIII Office of the Vice President of the United States (Parts 2800—2899)

XXIX Presidential Commission on the Assignment of Women in the Armed Forces (Part 2900)

Title 33—Navigation and Navigable Waters

I Coast Guard, Department of Transportation (Parts 1—199)

II Corps of Engineers, Department of the Army (Parts 200—399)

IV Saint Lawrence Seaway Development Corporation, Department of Transportation (Parts 400—499)

Title 34—Education

SUBTITLE A—Office of the Secretary, Department of Education (Parts 1—99)

SUBTITLE B—Regulations of the Offices of the Department of Education

I Office for Civil Rights, Department of Education (Parts 100—199)

II Office of Elementary and Secondary Education, Department of Education (Parts 200—299)

III Office of Special Education and Rehabilitative Services, Department of Education (Parts 300—399)

IV Office of Vocational and Adult Education, Department of Education (Parts 400—499)

V Office of Bilingual Education and Minority Languages Affairs, Department of Education (Parts 500—599)

VI Office of Postsecondary Education, Department of Education (Parts 600—699)

Title 34—Education—Continued

Chap.

VII Office of Educational Research and Improvement, Department of Education (Parts 700—799)

XI National Institute for Literacy (Parts 1100-1199)

SUBTITLE C—Regulations Relating to Education

XII National Council on Disability (Parts 1200—1299)

Title 35—Panama Canal

I Panama Canal Regulations (Parts 1—299)

Title 36—Parks, Forests, and Public Property

I National Park Service, Department of the Interior (Parts 1—199)

II Forest Service, Department of Agriculture (Parts 200—299)

III Corps of Engineers, Department of the Army (Parts 300—399)

IV American Battle Monuments Commission (Parts 400—499)

V Smithsonian Institution (Parts 500—599)

VII Library of Congress (Parts 700—799)

VIII Advisory Council on Historic Preservation (Parts 800—899)

IX Pennsylvania Avenue Development Corporation (Parts 900—999)

XI Architectural and Transportation Barriers Compliance Board (Parts 1100—1199)

XII National Archives and Records Administration (Parts 1200—1299)

XIV Assassination Records Review Board (Parts 1400-1499)

Title 37—Patents, Trademarks, and Copyrights

I Patent and Trademark Office, Department of Commerce (Parts 1—199)

II Copyright Office, Library of Congress (Parts 200—299)

IV Assistant Secretary for Technology Policy, Department of Commerce (Parts 400—499)

V Under Secretary for Technology, Department of Commerce (Parts 500—599)

Title 38—Pensions, Bonuses, and Veterans' Relief

I Department of Veterans Affairs (Parts 0—99)

Title 39—Postal Service

I United States Postal Service (Parts 1—999)

III Postal Rate Commission (Parts 3000—3099)

Title 40—Protection of Environment

I Environmental Protection Agency (Parts 1—799)

V Council on Environmental Quality (Parts 1500—1599)

Title 41—Public Contracts and Property Management

Chap.

SUBTITLE B—Other Provisions Relating to Public Contracts

50 Public Contracts, Department of Labor (Parts 50–1—50–999)

51 Committee for Purchase From People Who Are Blind or Severely Disabled (Parts 51–1—51–99)

60 Office of Federal Contract Compliance Programs, Equal Employment Opportunity, Department of Labor (Parts 60–1—60–999)

61 Office of the Assistant Secretary for Veterans Employment and Training, Department of Labor (Parts 61–1—61–999)

SUBTITLE C—Federal Property Management Regulations System

101 Federal Property Management Regulations (Parts 101–1—101–99)

105 General Services Administration (Parts 105–1—105–999)

109 Department of Energy Property Management Regulations (Parts 109–1—109–99)

114 Department of the Interior (Parts 114–1—114–99)

115 Environmental Protection Agency (Parts 115–1—115–99)

128 Department of Justice (Parts 128–1—128–99)

SUBTITLE D—Other Provisions Relating to Property Management [Reserved]

SUBTITLE E—Federal Information Resources Management Regulations System

201 Federal Information Resources Management Regulation (Parts 201–1—201–99)

SUBTITLE F—Federal Travel Regulation System

301 Travel Allowances (Parts 301–1—301–99)

302 Relocation Allowances (Parts 302–1—302–99)

303 Payment of Expenses Connected with the Death of Certain Employees (Parts 303–1—303–2)

304 Payment from a Non-Federal Source for Travel Expenses (Parts 304–1—304–99)

Title 42—Public Health

I Public Health Service, Department of Health and Human Services (Parts 1—199)

IV Health Care Financing Administration, Department of Health and Human Services (Parts 400—499)

V Office of Inspector General-Health Care, Department of Health and Human Services (Parts 1000—1999)

Title 43—Public Lands: Interior

SUBTITLE A—Office of the Secretary of the Interior (Parts 1—199)

SUBTITLE B—Regulations Relating to Public Lands

I Bureau of Reclamation, Department of the Interior (Parts 200—499)

II Bureau of Land Management, Department of the Interior (Parts 1000—9999)

III Utah Reclamation Mitigation and Conservation Commission (Parts 10000—10005)

Title 44—Emergency Management and Assistance

Chap.

I Federal Emergency Management Agency (Parts 0—399)

IV Department of Commerce and Department of Transportation (Parts 400—499)

Title 45—Public Welfare

SUBTITLE A—Department of Health and Human Services, General Administration (Parts 1—199)

SUBTITLE B—Regulations Relating to Public Welfare

II Office of Family Assistance (Assistance Programs), Administration for Children and Families, Department of Health and Human Services (Parts 200—299)

III Office of Child Support Enforcement (Child Support Enforcement Program), Administration for Children and Families, Department of Health and Human Services (Parts 300—399)

IV Office of Refugee Resettlement, Administration for Children and Families Department of Health and Human Services (Parts 400—499)

V Foreign Claims Settlement Commission of the United States, Department of Justice (Parts 500—599)

VI National Science Foundation (Parts 600—699)

VII Commission on Civil Rights (Parts 700—799)

VIII Office of Personnel Management (Parts 800—899)

X Office of Community Services, Administration for Children and Families, Department of Health and Human Services (Parts 1000—1099)

XI National Foundation on the Arts and the Humanities (Parts 1100—1199)

XII ACTION (Parts 1200—1299)

XIII Office of Human Development Services, Department of Health and Human Services (Parts 1300—1399)

XVI Legal Services Corporation (Parts 1600—1699)

XVII National Commission on Libraries and Information Science (Parts 1700—1799)

XVIII Harry S. Truman Scholarship Foundation (Parts 1800—1899)

XXI Commission on Fine Arts (Parts 2100—2199)

XXII Christopher Columbus Quincentenary Jubilee Commission (Parts 2200—2299)

XXIII Arctic Research Commission (Part 2301)

XXIV James Madison Memorial Fellowship Foundation (Parts 2400—2499)

XXV Corporation for National and Community Service (Parts 2500—2599)

Title 46—Shipping

I Coast Guard, Department of Transportation (Parts 1—199)

II Maritime Administration, Department of Transportation (Parts 200—399)

IV Federal Maritime Commission (Parts 500—599)

Title 47—Telecommunication

Chap.

I Federal Communications Commission (Parts 0—199)

II Office of Science and Technology Policy and National Security Council (Parts 200—299)

III National Telecommunications and Information Administration, Department of Commerce (Parts 300—399)

Title 48—Federal Acquisition Regulations System

1 Federal Acquisition Regulation (Parts 1—99)

2 Department of Defense (Parts 200—299)

3 Department of Health and Human Services (Parts 300—399)

4 Department of Agriculture (Parts 400—499)

5 General Services Administration (Parts 500—599)

6 Department of State (Parts 600—699)

7 Agency for International Development (Parts 700—799)

8 Department of Veterans Affairs (Parts 800—899)

9 Department of Energy (Parts 900—999)

10 Department of the Treasury (Parts 1000—1099)

12 Department of Transportation (Parts 1200—1299)

13 Department of Commerce (Parts 1300—1399)

14 Department of the Interior (Parts 1400—1499)

15 Environmental Protection Agency (Parts 1500—1599)

16 Office of Personnel Management Federal Employees Health Benefits Acquisition Regulation (Parts 1600—1699)

17 Office of Personnel Management (Parts 1700—1799)

18 National Aeronautics and Space Administration (Parts 1800—1899)

19 United States Information Agency (Parts 1900—1999)

20 Nuclear Regulatory Commission (Parts 2000—2099)

21 Office of Personnel Management, Federal Employees Group Life Insurance Federal Acquisition Regulation (Parts 2100—2199)

22 Small Business Administration (Parts 2200—2299)

24 Department of Housing and Urban Development (Parts 2400—2499)

25 National Science Foundation (Parts 2500—2599)

28 Department of Justice (Parts 2800—2899)

29 Department of Labor (Parts 2900—2999)

34 Department of Education Acquisition Regulation (Parts 3400—3499)

35 Panama Canal Commission (Parts 3500—3599)

44 Federal Emergency Management Agency (Parts 4400—4499)

51 Department of the Army Acquisition Regulations (Parts 5100—5199)

52 Department of the Navy Acquisition Regulations (Parts 5200—5299)

53 Department of the Air Force Federal Acquisition Regulation Supplement (Parts 5300—5399)

54 Defense Logistics Agency, Department of Defense (Part 5452)

Title 48—Federal Acquisition Regulations System—Continued

Chap.

57 African Development Foundation (Parts 5700—5799)

61 General Services Administration Board of Contract Appeals (Parts 6100—6199)

63 Department of Transportation Board of Contract Appeals (Parts 6300—6399)

99 Cost Accounting Standards Board, Office of Federal Procurement Policy, Office of Management and Budget (Parts 9900—9999)

Title 49—Transportation

SUBTITLE A—Office of the Secretary of Transportation (Parts 1—99)

SUBTITLE B—Other Regulations Relating to Transportation

I Research and Special Programs Administration, Department of Transportation (Parts 100—199)

II Federal Railroad Administration, Department of Transportation (Parts 200—299)

III Federal Highway Administration, Department of Transportation (Parts 300—399)

IV Coast Guard, Department of Transportation (Parts 400—499)

V National Highway Traffic Safety Administration, Department of Transportation (Parts 500—599)

VI Federal Transit Administration, Department of Transportation (Parts 600—699)

VII National Railroad Passenger Corporation (AMTRAK) (Parts 700—799)

VIII National Transportation Safety Board (Parts 800—999)

X Surface Transportation Board, Department of Transportation (Parts 1000—1399)

Title 50—Wildlife and Fisheries

I United States Fish and Wildlife Service, Department of the Interior (Parts 1—199)

II National Marine Fisheries Service, National Oceanic and Atmospheric Administration, Department of Commerce (Parts 200—299)

III International Regulatory Agencies (Fishing and Whaling) (Parts 300—399)

IV Joint Regulations (United States Fish and Wildlife Service, Department of the Interior and National Marine Fisheries Service, National Oceanic and Atmospheric Administration, Department of Commerce); Endangered Species Committee Regulations (Parts 400—499)

V Marine Mammal Commission (Parts 500—599)

VI Fishery Conservation and Management, National Oceanic and Atmospheric Administration, Department of Commerce (Parts 600—699)

CFR Index and Finding Aids

Chap.

Subject/Agency Index
List of Agency Prepared Indexes
Parallel Tables of Statutory Authorities and Rules
Acts Requiring Publication in the Federal Register
List of CFR Titles, Chapters, Subchapters, and Parts
Alphabetical List of Agencies Appearing in the CFR

Alphabetical List of Agencies Appearing in the CFR

(Revised as of June 30, 1996)

Agency	CFR Title, Subtitle or Chapter
ACTION	45, XII
Administrative Committee of the Federal Register	1, I
Advanced Research Projects Agency	32, I
Advisory Commission on Intergovernmental Relations	5, VII
Advisory Committee on Federal Pay	5, IV
Advisory Council on Historic Preservation	36, VIII
African Development Foundation	22, XV
Federal Acquisition Regulation	48, 57
Agency for International Development	22, II
Federal Acquisition Regulation	48, 7
Agricultural Marketing Service	7, I, IX, X, XI
Agricultural Research Service	7, V
Agriculture Department	
Agricultural Marketing Service	7, I, IX, X, XI
Agricultural Research Service	7, V
Animal and Plant Health Inspection Service	7, III; 9, I
Commodity Credit Corporation	7, XIV
Cooperative State Research, Education, and Extension Service	7, XXXIV
Economic Analysis Staff	7, XXXIX
Economic Research Service	7, XXXVII
Economics Management Staff	7, XL
Energy, Office of	7, XXIX
Environmental Quality, Office of	7, XXXI
Farm Service Agency	7, VII, XVIII
Federal Acquisition Regulation	48, 4
Federal Crop Insurance Corporation	7, IV
Finance and Management, Office of	7, XXX
Food and Consumer Service	7, II
Food Safety and Inspection Service	9, III
Foreign Agricultural Service	7, XV
Forest Service	36, II
Grain Inspection, Packers and Stockyards Administration	7, VIII; 9, II
Information Resources Management, Office of	7, XXVII
Inspector General, Office of	7, XXVI
National Agricultural Library	7, XLI
National Agricultural Statistics Service	7, XXXVI
Natural Resources Conservation Service	7, VI
Operations, Office of	7, XXVIII
Rural Business-Cooperative Service	7, XVIII, XLII
Rural Development Administration	7, XLII
Rural Housing Service	7, XVIII
Rural Telephone Bank	7, XVI
Rural Utilities Service	7, XVII, XVIII, XLII
Secretary of Agriculture, Office of	7, Subtitle A
Transportation, Office of	7, XXXIII
World Agricultural Outlook Board	7, XXXVIII
Air Force Department	32, VII
Federal Acquisition Regulation Supplement	48, 53
Alaska Natural Gas Transportation System, Office of the Federal Inspector	10, XV
Alcohol, Tobacco and Firearms, Bureau of	27, I
AMTRAK	49, VII

Agency	CFR Title, Subtitle or Chapter
American Battle Monuments Commission	36, IV
Animal and Plant Health Inspection Service	7, III; 9, I
Appalachian Regional Commission	5, IX
Architectural and Transportation Barriers Compliance Board	36, XI
Arctic Research Commission	45, XXIII
Arms Control and Disarmament Agency, United States	22, VI
Army Department	32, V
Engineers, Corps of	33, II; 36, III
Federal Acquisition Regulation	48, 51
Assassination Records Review Board	36, XIV
Benefits Review Board	20, VII
Bilingual Education and Minority Languages Affairs, Office of	34, V
Blind or Severely Disabled, Committee for Purchase From People Who Are	41, 51
Board for International Broadcasting	22, XIII
Census Bureau	15, I
Central Intelligence Agency	32, XIX
Child Support Enforcement, Office of	45, III
Children and Families, Administration for	45, II, III, IV, X
Christopher Columbus Quincentenary Jubilee Commission	45, XXII
Civil Rights, Commission on	45, VII
Civil Rights, Office for	34, I
Coast Guard	33, I; 46, I; 49, IV
Commerce Department	44, IV
Census Bureau	15, I‘
Economic Affairs, Under Secretary	37, V
Economic Analysis, Bureau of	15, VIII
Economic Development Administration	13, III
Emergency Management and Assistance	44, IV
Export Administration, Bureau of	15, VII
Federal Acquisition Regulation	48, 13
Fishery Conservation and Management	50, VI
Foreign-Trade Zones Board	15, IV
International Trade Administration	15, III; 19, III
National Institute of Standards and Technology	15, II
National Marine Fisheries Service	50, II, IV
National Oceanic and Atmospheric Administration	15, IX; 50, II, III, IV, VI
National Telecommunications and Information Administration	15, XXIII; 47, III
National Weather Service	15, IX
Patent and Trademark Office	37, I
Productivity, Technology and Innovation, Assistant Secretary for	37, IV
Secretary of Commerce, Office of	15, Subtitle A
Technology, Under Secretary for	37, V
Technology Administration	15, XI
Technology Policy, Assistant Secretary for	37, IV
Commercial Space Transportation, Office of	14, III
Commodity Credit Corporation	7, XIV
Commodity Futures Trading Commission	5, XLI; 17, I
Community Planning and Development, Office of Assistant Secretary for	24, V, VI
Community Services, Office of	45, X
Comptroller of the Currency	12, I
Construction Industry Collective Bargaining Commission	29, IX
Consumer Product Safety Commission	16, II
Cooperative State Research, Education, and Extension Service	7, XXXIV
Copyright Office	37, II
Cost Accounting Standards Board	48, 99
Council on Environmental Quality	40, V
Customs Service, United States	19, I
Defense Contract Audit Agency	32, I
Defense Department	5, XXVI; 32, Subtitle A
Advanced Research Projects Agency	32, I
Air Force Department	32, VII
Army Department	32, V; 33, II; 36, III, 48, 51

Agency	CFR Title, Subtitle or Chapter
Defense Intelligence Agency	32, I
Defense Logistics Agency	32, I, XII; 48, 54
Defense Mapping Agency	32, I
Engineers, Corps of	33, II; 36, III
Federal Acquisition Regulation	48, 2
Navy Department	32, VI; 48, 52
Secretary of Defense, Office of	32, I
Defense Contract Audit Agency	32, I
Defense Intelligence Agency	32, I
Defense Logistics Agency	32, XII; 48, 54
Defense Mapping Agency	32, I
Defense Nuclear Facilities Safety Board	10, XVII
Delaware River Basin Commission	18, III
Drug Enforcement Administration	21, II
East-West Foreign Trade Board	15, XIII
Economic Affairs, Under Secretary	37, V
Economic Analysis, Bureau of	15, VIII
Economic Analysis Staff	7, XXXIX
Economic Development Administration	13, III
Economics Management Staff	7, XL
Economic Research Service	7, XXXVII
Education, Department of	5, LIII
Bilingual Education and Minority Languages Affairs, Office of	34, V
Civil Rights, Office for	34, I
Educational Research and Improvement, Office of	34, VII
Elementary and Secondary Education, Office of	34, II
Federal Acquisition Regulation	48, 34
Postsecondary Education, Office of	34, VI
Secretary of Education, Office of	34, Subtitle A
Special Education and Rehabilitative Services, Office of	34, III
Vocational and Adult Education, Office of	34, IV
Educational Research and Improvement, Office of	34, VII
Elementary and Secondary Education, Office of	34, II
Employees' Compensation Appeals Board	20, IV
Employees Loyalty Board	5, V
Employment and Training Administration	20, V
Employment Standards Administration	20, VI
Endangered Species Committee	50, IV
Energy, Department of	10, II, III, X
Federal Acquisition Regulation	48, 9
Federal Energy Regulatory Commission	18, I
Property Management Regulations	41, 109
Energy, Office of	7, XXIX
Engineers, Corps of	33, II; 36, III
Engraving and Printing, Bureau of	31, VI
Enrichment Corporation, United States	10, XI
Environmental Protection Agency	40, I
Federal Acquisition Regulation	48, 15
Property Management Regulations	41, 115
Environmental Quality, Office of	7, XXXI
Equal Employment Opportunity Commission	5, LXII; 29, XIV
Equal Opportunity, Office of Assistant Secretary for	24, I
Executive Office of the President	3, I
Administration, Office of	5, XV
Environmental Quality, Council on	40, V
Management and Budget, Office of	25, III, LXXVII; 48, 99
National Drug Control Policy, Office of	21, III
National Security Council	32, XXI; 47, 2
Presidential Documents	3
Science and Technology Policy, Office of	32, XXIV; 47, II
Trade Representative, Office of the United States	15, XX
Export Administration, Bureau of	15, VII
Export-Import Bank of the United States	5, LII; 12, IV
Family Assistance, Office of	45, II
Farm Credit Administration	5, XXXI; 12, VI
Farm Credit System Insurance Corporation	5, XXX; 12, XIV

Agency	CFR Title, Subtitle or Chapter
Farm Service Agency	7, VII, XVIII
Farmers Home Administration	7, XVIII
Federal Acquisition Regulation	48, 1
Federal Aviation Administration	14, I
Federal Claims Collection Standards	4, II
Federal Communications Commission	47, I
Federal Contract Compliance Programs, Office of	41, 60
Federal Crop Insurance Corporation	7, IV
Federal Deposit Insurance Corporation	5, XXII; 12, III
Federal Election Commission	11, I
Federal Emergency Management Agency	44, I
Federal Acquisition Regulation	48, 44
Federal Employees Group Life Insurance Federal Acquisition Regulation	48, 21
Federal Employees Health Benefits Acquisition Regulation	48, 16
Federal Energy Regulatory Commission	18, I
Federal Financial Institutions Examination Council	12, XI
Federal Financing Bank	12, VIII
Federal Highway Administration	23, I, II; 49, III
Federal Home Loan Mortgage Corporation	1, IV
Federal Housing Enterprise Oversight Office	12, XVII
Federal Housing Finance Board	12, IX
Federal Information Resources Management Regulations	41, Subtitle E, Ch. 201
Federal Inspector for the Alaska Natural Gas Transportation System, Office of	10, XV
Federal Labor Relations Authority, and General Counsel of the Federal Labor Relations Authority	5, XIV; 22, XIV
Federal Law Enforcement Training Center	31, VII
Federal Maritime Commission	46, IV
Federal Mediation and Conciliation Service	29, XII
Federal Mine Safety and Health Review Commission	29, XXVII
Federal Pay, Advisory Committee on	5, IV
Federal Prison Industries, Inc.	28, III
Federal Procurement Policy Office	48, 99
Federal Property Management Regulations	41, 101
Federal Property Management Regulations System	41, Subtitle C
Federal Railroad Administration	49, II
Federal Register, Administrative Committee of	1, I
Federal Register, Office of	1, II
Federal Reserve System	12, II
Federal Retirement Thrift Investment Board	5, VI, LXXVI
Federal Service Impasses Panel	5, XIV
Federal Trade Commission	5, XLVII; 16, I
Federal Transit Administration	49, VI
Federal Travel Regulation System	41, Subtitle F
Finance and Management, Office of	7, XXX
Fine Arts, Commission on	45, XXI
Fiscal Service	31, II
Fish and Wildlife Service, United States	50, I, IV
Fishery Conservation and Management	50, VI
Fishing and Whaling, International Regulatory Agencies	50, III
Food and Drug Administration	21, I
Food and Consumer Service	7, II
Food Safety and Inspection Service	9, III
Foreign Agricultural Service	7, XV
Foreign Assets Control, Office of	31, V
Foreign Claims Settlement Commission of the United States	45, V
Foreign Service Grievance Board	22, IX
Foreign Service Impasse Disputes Panel	22, XIV
Foreign Service Labor Relations Board	22, XIV
Foreign-Trade Zones Board	15, IV
Forest Service	36, II
General Accounting Office	4, I, II
General Services Administration	
Contract Appeals, Board of	48, 61
Federal Acquisition Regulation	48, 5
Federal Information Resources Management Regulations	41, Subtitle E, Ch. 201

Agency	CFR Title, Subtitle or Chapter
Federal Property Management Regulations System	41, 101, 105
Federal Travel Regulation System	41, Subtitle F
Payment From a Non-Federal Source for Travel Expenses	41, 304
Payment of Expenses Connected With the Death of Certain Employees	41, 303
Relocation Allowances	41, 302
Travel Allowances	41, 301
Geological Survey	30, IV
Government Ethics, Office of	5, XVI
Government National Mortgage Association	24, III
Grain Inspection, Packers and Stockyards Administration	7, VIII; 9, II
Great Lakes Pilotage	46, III
Harry S. Truman Scholarship Foundation	45, XVIII
Health and Human Services, Department of	45, Subtitle A
Child Support Enforcement, Office of	45, III
Children and Families, Administration for	45, II, III, IV, X
Community Services, Office of	45, X
Family Assistance, Office of	45, II
Federal Acquisition Regulation	48, 3
Food and Drug Administration	21, I
Health Care Financing Administration	42, IV
Human Development Services, Office of	45, XIII
Indian Health Service	25, V
Inspector General (Health Care), Office of	42, V
Public Health Service	42, I
Refugee Resettlement, Office of	45, IV
Health Care Financing Administration	42, IV
Housing and Urban Development, Department of	24, Subtitle B
Community Planning and Development, Office of Assistant Secretary for	24, V, VI
Equal Opportunity, Office of Assistant Secretary for	24, I
Federal Acquisition Regulation	48, 24
Federal Housing Enterprise Oversight, Office of	12, XVII
Government National Mortgage Association	24, III
Housing—Federal Housing Commissioner, Office of Assistant Secretary for	24, II, VIII, X, XX
Inspector General, Office of	24, XII
Public and Indian Housing, Office of Assistant Secretary for	24, IX
Secretary, Office of	24, Subtitle A, VII
Housing—Federal Housing Commissioner, Office of Assistant Secretary for	24, II, VIII, X, XX
Human Development Services, Office of	45, XIII
Immigration and Naturalization Service	8, I
Independent Counsel, Office of	28, VII
Indian Affairs, Bureau of	25, I, V
Indian Affairs, Office of the Assistant Secretary	25, VI
Indian Arts and Crafts Board	25, II
Indian Health Service	25, V
Information Agency, United States	22, V
Federal Acquisition Regulation	48, 19
Information Resources Management, Office of	7, XXVII
Information Security Oversight Office, National Archives and Records Administration	32, XX
Inspector General	
Agriculture Department	7, XXVI
Health and Human Services Department	42, V
Housing and Urban Development Department	24, XII
Institute of Peace, United States	22, XVII
Inter-American Foundation	5, LXIII; 22, X
Intergovernmental Relations, Advisory Commission on	5, VII
Interior Department	
Endangered Species Committee	50, IV
Federal Acquisition Regulation	48, 14
Federal Property Management Regulations System	41, 114
Fish and Wildlife Service, United States	50, I, IV
Geological Survey	30, IV
Indian Affairs, Bureau of	25, I, V

Agency	CFR Title, Subtitle or Chapter
Indian Affairs, Office of the Assistant Secretary	25, VI
Indian Arts and Crafts Board	25, II
Land Management, Bureau of	43, II
Minerals Management Service	30, II
Mines, Bureau of	30, VI
National Indian Gaming Commission	25, III
National Park Service	36, I
Reclamation, Bureau of	43, I
Secretary of the Interior, Office of	43, Subtitle A
Surface Mining and Reclamation Appeals, Board of	30, III
Surface Mining Reclamation and Enforcement, Office of	30, VII
Internal Revenue Service	26, I
International Boundary and Water Commission, United States and Mexico, United States Section	22, XI
International Development, Agency for	22, II
Federal Acquisition Regulation	48, 7
International Development Cooperation Agency, United States	22, XII
International Development, Agency for	22, II; 48, 7
Overseas Private Investment Corporation	5, XXXIII; 22, VII
International Investment, Office of	31, VIII
International Joint Commission, United States and Canada	22, IV
International Organizations Employees Loyalty Board	5, V
International Regulatory Agencies (Fishing and Whaling)	50, III
International Trade Administration	15, III; 19, III
International Trade Commission, United States	19, II
Interstate Commerce Commission	5, XL
James Madison Memorial Fellowship Foundation	45, XXIV
Japan–United States Friendship Commission	22, XVI
Joint Board for the Enrollment of Actuaries	20, VIII
Justice Department	28, I
Drug Enforcement Administration	21, II
Federal Acquisition Regulation	48, 28
Federal Claims Collection Standards	4, II
Federal Prison Industries, Inc.	28, III
Foreign Claims Settlement Commission of the United States	45, V
Immigration and Naturalization Service	8, I
Offices of Independent Counsel	28, VI
Prisons, Bureau of	28, V
Property Management Regulations	41, 128
Labor Department	
Benefits Review Board	20, VII
Employees' Compensation Appeals Board	20, IV
Employment and Training Administration	20, V
Employment Standards Administration	20, VI
Federal Acquisition Regulation	48, 29
Federal Contract Compliance Programs, Office of	41, 60
Federal Procurement Regulations System	41, 50
Labor-Management Relations and Cooperative Programs, Bureau of	29, II
Labor-Management Programs, Office of	29, IV
Mine Safety and Health Administration	30, I
Occupational Safety and Health Administration	29, XVII
Pension and Welfare Benefits Administration	29, XXV
Public Contracts	41, 50
Secretary of Labor, Office of	29, Subtitle A
Veterans' Employment and Training, Office of the Assistant Secretary for	41, 61; 20, IX
Wage and Hour Division	29, V
Workers' Compensation Programs, Office of	20, I
Labor-Management Relations and Cooperative Programs, Bureau of	29, II
Labor-Management Programs, Office of	29, IV
Land Management, Bureau of	43, II
Legal Services Corporation	45, XVI
Library of Congress	36, VII

Agency	CFR Title, Subtitle or Chapter
Copyright Office	37, II
Management and Budget, Office of	5, III, LXXVII; 48, 99
Marine Mammal Commission	50, V
Maritime Administration	46, II
Merit Systems Protection Board	5, II
Micronesian Status Negotiations, Office for	32, XXVII
Mine Safety and Health Administration	30, I
Minerals Management Service	30, II
Mines, Bureau of	30, VI
Minority Business Development Agency	15, XIV
Miscellaneous Agencies	1, IV
Monetary Offices	31, I
National Aeronautics and Space Administration	5, LIX; 14, V
Federal Acquisition Regulation	48, 18
National Agricultural Library	7, XLI
National Agricultural Statistics Service	7, XXXVI
National Archives and Records Administration	36, XII
Information Security Oversight Office	32, XX
National Bureau of Standards	15, II
National Capital Planning Commission	1, IV
National Commission for Employment Policy	1, IV
National Commission on Libraries and Information Science	45, XVII
National and Community Service, Corporation for	45, XXV
National Council on Disability	34, XII
National Credit Union Administration	12, VII
National Drug Control Policy, Office of	21, III
National Foundation on the Arts and the Humanities	45, XI
National Highway Traffic Safety Administration	23, II, III; 49, V
National Indian Gaming Commission	25, III
National Institute for Literacy	34, XI
National Institute of Standards and Technology	15, II
National Labor Relations Board	29, I
National Marine Fisheries Service	50, II, IV
National Mediation Board	29, X
National Oceanic and Atmospheric Administration	15, IX; 50, II, III, IV, VI
National Park Service	36, I
National Railroad Adjustment Board	29, III
National Railroad Passenger Corporation (AMTRAK)	49, VII
National Science Foundation	45, VI
Federal Acquisition Regulation	48, 25
National Security Council	32, XXI
National Security Council and Office of Science and Technology Policy	47, II
National Telecommunications and Information Administration	15, XXIII; 47, III
National Transportation Safety Board	49, VIII
National Weather Service	15, IX
Natural Resources Conservation Service	7, VI
Navajo and Hopi Indian Relocation, Office of	25, IV
Navy Department	32, VI
Federal Acquisition Regulation	48, 52
Neighborhood Reinvestment Corporation	24, XXV
Nuclear Regulatory Commission	5, XLVIII; 10, I
Federal Acquisition Regulation	48, 20
Occupational Safety and Health Administration	29, XVII
Occupational Safety and Health Review Commission	29, XX
Offices of Independent Counsel	28, VI
Operations Office	7, XXVIII
Overseas Private Investment Corporation	5, XXXIII; 22, VII
Panama Canal Commission	48, 35
Panama Canal Regulations	35, I
Patent and Trademark Office	37, I
Payment From a Non-Federal Source for Travel Expenses	41, 304
Payment of Expenses Connected With the Death of Certain Employees	41, 303
Peace Corps	22, III
Pennsylvania Avenue Development Corporation	36, IX

Agency	CFR Title, Subtitle or Chapter
Pension and Welfare Benefits Administration	29, XXV
Pension Benefit Guaranty Corporation	29, XXVI
Personnel Management, Office of	5, I; 45, VIII
Federal Acquisition Regulation	48, 17
Federal Employees Group Life Insurance Federal Acquisition Regulation	48, 21
Federal Employees Health Benefits Acquisition Regulation	48, 16
Postal Rate Commission	5, XLVI; 39, III
Postal Service, United States	5, LX; 39, I
Postsecondary Education, Office of	34, VI
President's Commission on White House Fellowships	1, IV
Presidential Commission on the Assignment of Women in the Armed Forces	32, XXIX
Presidential Documents	3
Prisons, Bureau of	28, V
Productivity, Technology and Innovation, Assistant Secretary	37, IV
Public Contracts, Department of Labor	41, 50
Public and Indian Housing, Office of Assistant Secretary for	24, IX
Public Health Service	42, I
Railroad Retirement Board	20, II
Reclamation, Bureau of	43, I
Refugee Resettlement, Office of	45, IV
Regional Action Planning Commissions	13, V
Relocation Allowances	41, 302
Research and Special Programs Administration	49, I
Rural Business-Cooperative Service	7, XVIII, XLII
Rural Development Administration	7, XLII
Rural Housing Service	7, XVIII
Rural Telephone Bank	7, XVI
Rural Utilities Service	7, XVII, XVIII, XLII
Saint Lawrence Seaway Development Corporation	33, IV
Science and Technology Policy, Office of	32, XXIV
Science and Technology Policy, Office of, and National Security Council	47, II
Secret Service	31, IV
Securities and Exchange Commission	17, II
Selective Service System	32, XVI
Small Business Administration	13, I
Federal Acquisition Regulation	48, 22
Smithsonian Institution	36, V
Social Security Administration	20, III
Soldiers' and Airmen's Home, United States	5, XI
Special Counsel, Office of	5, VIII
Special Education and Rehabilitative Services, Office of	34, III
State Department	22, I
Federal Acquisition Regulation	48, 6
Surface Mining and Reclamation Appeals, Board of	30, III
Surface Mining Reclamation and Enforcement, Office of	30, VII
Surface Transportation Board	49, X
Susquehanna River Basin Commission	18, VIII
Technology Administration	15, XI
Technology Policy, Assistant Secretary for	37, IV
Technology, Under Secretary for	37, V
Tennessee Valley Authority	5, LXIX; 18, XIII
Thrift Depositor Protection Oversight Board	12, XV
Thrift Supervision Office, Department of the Treasury	12, V
Trade Representative, United States, Office of	15, XX
Transportation, Department of	
Coast Guard	33, I; 46, I; 49, IV
Commercial Space Transportation, Office of	14, III
Contract Appeals, Board of	48, 63
Emergency Management and Assistance	44, IV
Federal Acquisition Regulation	48, 12
Federal Aviation Administration	14, I
Federal Highway Administration	23, I, II; 49, III
Federal Railroad Administration	49, II

Agency	CFR Title, Subtitle or Chapter
Federal Transit Administration	49, VI
Maritime Administration	46, II
National Highway Traffic Safety Administration	23, II, III; 49, V
Research and Special Programs Administration	49, I
Saint Lawrence Seaway Development Corporation	33, IV
Secretary of Transportation, Office of	14, II; 49, Subtitle A
Surface Transportation Board	49, X
Transportation, Office of	7, XXXIII
Travel Allowances	41, 301
Treasury Department	5, XXI; 17, IV
Alcohol, Tobacco and Firearms, Bureau of	27, I
Community Development Financial Institutions Fund	12, XVIII
Comptroller of the Currency	12, I
Customs Service, United States	19, I
Engraving and Printing, Bureau of	31, VI
Federal Acquisition Regulation	48, 10
Federal Law Enforcement Training Center	31, VII
Fiscal Service	31, II
Foreign Assets Control, Office of	31, V
Internal Revenue Service	26, I
International Investment, Office of	31, VIII
Monetary Offices	31, I
Secret Service	31, IV
Secretary of the Treasury, Office of	31, Subtitle A
Thrift Supervision, Office of	12, V
Truman, Harry S. Scholarship Foundation	45, XVIII
United States and Canada, International Joint Commission	22, IV
United States and Mexico, International Boundary and Water Commission, United States Section	22, XI
United States Enrichment Corporation	10, XI
Utah Reclamation Mitigation and Conservation Commission	43, III
Veterans Affairs Department	38, I
Federal Acquisition Regulation	48, 8
Veterans' Employment and Training, Office of the Assistant Secretary for	41, 61; 20, IX
Vice President of the United States, Office of	32, XXVIII
Vocational and Adult Education, Office of	34, IV
Wage and Hour Division	29, V
Water Resources Council	18, VI
Workers' Compensation Programs, Office of	20, I
World Agricultural Outlook Board	7, XXXVIII

Redesignation Table

At 51 FR 40660, Nov. 7, 1986, a document was published restructuring part 51. For the convenience of the user, the following Redesignation Table and Redesingation II shows the relationship of the old regulations to the new regulations.

TABLE 1—Redesignation Table and Master Plan to Restructure 40 CFR Part 51

New designation section No. and title	Old designation section No. and title
Subpart F Procedural Requirements	
51.100 Definitions	51.1 Definitions.
51.101 Stipulations	51.2 Stipulations.
51.102 Public hearings	51.4 Public hearings.
51.103 Submission of plans	51.5 Submission of plans.
51.104 Revisions	51.6 Revisions. 51.34 Variances.
51.105 Approval of plans	51.8 Approval of plans.
Subpart G Control Strategy	
51.110 Attainment and Maintenance of National Standards	51.10 General requirements (portion). 51.12 Control strategy: General (portion). 51.13 Control strategy: SO_x & PM (portion). 51.14 Control strategy: CO, HC, Ox & NO_2 (portion). 51.80 Demonstration of attainment: Pb (portion).
51.111 Description of control measures	51.14 Control strategy: CO, HC, Ox, & NO_2 (portion). 51.87 Measures: Pb.
51.112 Demonstration of adequacy	51.13 Control strategy: SO_x & PM (portion). 51.14 Control strategy: CO, HC, Ox, & NO_2 (portion). 51.80 Demonstration of attainment: Pb (portion). 51.82 Air quality data (portion).
51.113 Time period for demonstration of adequacy	51.10 General requirements (portion). 51.81 Emissions data: Pb (portion).
51.114 Emissions data and projections	51.13 Control strategy: SO_x & PM (portion). 51.14 Control strategy: CO, HC, Ox, & NO_2 (portion). 51.81 Emissions data: Pb (portion).
51.115 Air quality data and projections	51.13 Control strategy : SO_x & PM (portion). 51.14 Control strategy: CO, HC, Ox, & NO_2 (portion). 51.82 Air quality data: Pb (portion).
51.116 Data availability	51.10 General requirements (portion). 51.88 Data availability: Pb.
51.117 Additional provisions for lead	51.80 Demonstration of attainment: Pb (portion). 51.81 Emissions data: Pb (portion).

TABLE 1—Redesignation Table and Master Plan to Restructure 40 CFR Part 51—Continued

New designation section No. and title	Old designation section No. and title
	51.82 Air quality data: Pb (portion). 51.83 Certain urbanized areas: Pb. 51.84 Areas around significant point source: Pb. 51.85 Other areas: Pb. 51.86 Data bases: Pb (portion).
51.118 Stack height provisions	51.12 Control strategy: General (portion).
51.119 Intermittent control systems	51.12 Control strategy: General (portion).
51.120–51.135 Reserved for new requirements as set forth in the Act	
51.136–51.140 Reserved for maintenance of PSD increment provisions	
Subpart H Prevention of Air Pollution Emergency Episodes (§§ 51.150 to 51.159)	51.3 51.16 Classification of regions. Prevention of air pollution emergency episodes.
Subpart I Review of New Sources and Modifications (§§ 51.160 to 51.189	51.18 51.24 Review of new sources and modifications. Prevention of significant deterioration.
Subpart J Air Quality Surveillance (§§ 51.190 to 51.209) (Promulgated 5/10/79)	51.17 Air quality surveillance.
Subpart K Source surveillance (§§ 51.210 to 51.229)	51.19 Source surveillance.
Subpart L Legal Authority (§§ 51.230 to 51.239)	51.11 Legal authority.
Subpart M Intergovernmental consultation (§§ 51.240 to 51.259) (Promulgated 6/18/79)	51.21 Intergovernmental cooperation.
Subpart N Compliance Schedules (§§ 51.260 to 51.279)	51.15 Compliance schedules.

TABLE 1—Redesignation Table and Master Plan to Restructure 40 CFR Part 51—Continued

New designation section No. and title	Old designation section No. and title
Subpart O Miscellaneous Plan Content Requirements	
51.280 Resources 51.281 Copies of rules and regulations 51.282 Reserved 51.283 Reserved 51.284 Public notification (Promulgated 5/10/79) Subpart P Visibility protection (§§ 51.300 through 51.319) (Promulgated 12/2/80)	51.20 Resources. 51.22 Rules and regulations.
Subpart Q Reports (§§ 51.320 through 51.339)	51.7 Reports.
Subpart R Extensions (§§ 51.340 through 51.369)	51.30 Request for 2-year extension. 51.31 Request for 18-month extension.
Revoked	51.1 Definitions (obsolete portions). 51.3 Classification of regions (as applicable to control strategies). 51.4 Public hearings (obsolete portions). 51.5 Submission of plans; preliminary review of plans (obsolete portions). 51.23 Exceptions. 51.32 Request for 1-year postponement. 51.33 Headings and appeals relating to request for one year postponement. 51.326 Reportable revisions. 51.328 Plan prescribed actions. Appendix A Air quality estimation. Appendix B Examples of emission limitations attainable with reasonably available control technology. Appendix C Major pollutant source. Appendix D Pollutant emissions inventory summary. Appendix E Point source data. Appendix F Area source data. Appendix G Emission inventory summary. Appendix H Air quality data summary. Appendix K Control agency functions. Appendix M Transportation Control Supporting Data Summary.

TABLE 1—Redesignation Table and Master Plan to Restructure 40 CFR Part 51—Continued

New designation section No. and title	Old designation section No. and title
	Appendix N Emissions Reductions Achievable Through Inspection, Maintenance and Retrofit of Light Duty Vehicles. Appendix O [Untitled]. Appendix R Agency functions for air quality maintenance area plans.

NA—Not applicable.

TABLE 2—REDISIGNATION TABLE

Old section	New section
51.1(a) through (nn) All paragraph designations are the same and have the same paragraph designation *except* those which are listed below.	51.100(a-nn).
51.1(a)	51.100(a) New citations added.
51.1(j)	51.100(j). Definition of local agency deleted. 51.1 includes two definitions of ''local agencies.'' EPA considers 51.100(g) a better definition. A new 51.100(j) is added which defines the term ''plan.''
51.1(k)(1)	51.100(k)(1) The term ''Volatile Organic Compound'' (VOC) replaces the term ''Hydrocarbons.''
51.1(k)(1)(i,ii)	51.1 Point source definition updated.
51.1(k)(1)(iii)	Unnecessary, Appendix C is deleted in this action.
51.1(1)	51.1Reference to Appendix D removed; reference to inventory techniques updated.
51.1(m)	51.100(m) revised.
51.1(o)	51.100(o) revised.
51.2	51.101.
51.3	51.50, streamlined.
51.4 All paragraphs are the same and are restructured with the same paragraph numbers except as noted below.	51.102.
51.4(a), (e)	51.102(a), (e) rewritten.
51.4(b)(4)	51.102(b)(4) rewritten.
51.4(b)(6)	Unnecessary, redundant.
51.4(f)	Deleted, obsolete.
51.5 All paragraphs are the same and restructured with the same paragraph numbers except as noted below	51.103.
51.5(a)	Rewritten; ''Note'' deleted.
51.5(d), (e)	Deleted, redundant.
51.6	51.104.

Redesignation Table

TABLE 2—REDISIGNATION TABLE—CONTINUED

Old section	New section
51.6(b) through (f)	51.104 (b) through (f) rewritten.
51.8	51.105.
51.10(a)	51.110(g) rewritten.
51.10(b)	51.110(b), (d).
51.10(c)	51.110(c)(1), (d).
51.10(d)	51.110(e), revised.
51.10(e)	51.116(c).
51.11(a)	51.230.
51.11a(1–6)	51.230(a) through (f).
51.11(b)	Unnecessary provisions for transportation plans, obsolete.
51.11(c)	51.231(a).
51.11(d)(1)	51.231(b).
51.11(d)(2)	51.231(c).
51.11(e)	51.232(a).
51.11(f)	51.232(b).
51.12(a)	51.110(a).
51.12(b)	51.110(a), (c).
51.12(c)	Deleted, redundant.
51.12(d)	51.110(f).
51.12(e)	51.110(h).
51.12(f)	51.110(i).
51.12(g)	51.110(j).
51.12(h)	51.110(k).
51.12(i)	51.110(l).,
51.12(j)	51.118(a).
51.12(k)	51.118(b).
51.12(l)	51.118(c).
51.12(m)	51.119(a).
51.12(n)	51.119(b).
51.13(a)	51.110(b).
51.13(b)	51.110(c).
51.13(c)	51.115(c).
51.13(d)	Deleted, example region approach.
51.13(e)(1) phrase ''in the example regions to which it applies.''	Deleted, example region approach.
Rest of 51.13(e)(1)	51.112(a).
51.13(e)(2)(i,ii)	Air Programs Reports and Guidelines Index.
51.13(e)(2)(iii)	51.112(a) and (b).
51.13(e)(3)(i)	51.112(b)(4), Air Programs Reports and Guidelines Index.
51.13(e)(3)(ii)	51.114(a).
51.13(e)(3)(iii)	51.112(b)(3), rewritten.
51.13(f,g)	51.114(a), 51.115(a) Portions related to example region approach deleted.
51.14(a)(1)	51.110(a), Rewritten, reference to priority of regions deleted.
51.14(a)(2)	51.111.
51.14(b)	Unnecessary.
51.14(c)(1)	51.112(a).
51.14(c)(2) and (5) through (7)	Air Programs Reports and Guidelines Index.
51.14(c)(5)	51.112(a).
51.14(c)(6)	51.112(b)(4).
51.14(c)(8)	51.115(d).
51.14(c)(9)	Reference to hydrocarbon standard which has been revoked, deleted.
51.14(d)	51.114(a).
51.14(e)	51.115.
51.14(f)	Air Programs Reports and Guidelines Index.
51.14(g)	Obsolete.

TABLE 2—REDISIGNATION TABLE—CONTINUED

Old section	New section
51.14(h)	Air Programs Reports and Guidelines Index.
51.15(a)(1)	51.260(a), (b).
51.15(b)(1)	51.261(a).
51.15(b)(2)	51.261(b).
51.15(c)	51.262(a).
51.16(a)	51.151.
51.16(b)	51.152(a).
51.16(d)	Deleted, obvious.
51.16(e)	51.152(b).
51.16(f)	Obsolete.
51.16(g)	51.152(c).
51.16(h)	51.152(d).
51.18(a)	51.160(a).
51.18(b)	51.160(b).
51.18(c)	51.160(c).
51.18(d)	51.160(d).
51.18(e)	51.162.
51.18(f)	51.160(e).
51.18(g)	51.163.
51.18(h)	51.161.
51.18(i)	Obsolete, refers to Appendix O, guidance on indirect source review.
51.18(j)	51.165(a).
51.18(k)	51.165(b).
51.18(l)	51.164.
51.19 (Introduction)	51.210.
51.19(a)	51.211.
51.19(b), (c)	51.212.
51.19(d)	51.213.
51.19(e)	51.214(a).
51.19(e)(1)	51.214(b).
51.19(e)(2)	51.214(c).
51.19(e)(3)	51.214(d).
51.19(e)(4)	51.214(e).
51.19(e)(5)	51.214(f).
51.19e(6)	Obsolete, deleted.
51.20	51.280.
51.22	51.281.
51.23	Unnecessary.
51.24	51.166.
51.30	51.340.
51.31	51.341.
51.32	Deleted, no longer in Clean Air Act (CAA).
51.33	Deleted, no longer in CAA.
51.34	51.104(g).
51.80(a)	51.110(b), 51.118(a).
51.80(b)	51.112(a).
51.80(c)	51.112(b).
51.81(a)	51.117(e).
51.81(b)	51.113(a).
51.81(c)	51.112(b)(1).
51.81(d)	51.114(c).
51.82(a)	51.115(b), 51.117(d)(1).
51.82(b)	51.117(b)(3).
51.82(c)	51.112(b)(3).
51.83	51.117(c)(1).
51.84	51.117(a), (c)(2).
51.85	51.117(c)(3).
51.86(a)	51.112(b)(5).
51.86(b)	51.117(e)(2).
51.86(c)	51.117(d)(1,2).
51.87	51.111.
51.88	51.116(a), (b).
51.326, 51.328	Deleted, report requirement no longer needed.

List of CFR Sections Affected

All changes in this volume of the Code of Federal Regulations which were made by documents published in the Federal Register since January 1, 1986, are enumerated in the following list. Entries indicate the nature of the changes effected. Page numbers refer to Federal Register pages. The user should consult the entries for chapters and parts as well as sections for revisions.

For the period before January 1, 1986, see the ''List of CFR Sections Affected, 1949–1963, 1964–1972, and 1973–1985'' which is published in seven separate volumes.

1986

40 CFR

51 FR Page

Chapter I

4 Revised 7016
6.103 (a)(4), (b)(2), (c)(2), (e) and (f) revised 32609
6.105 Heading and (d) revised 32610
6.107 (b) revised; (d), (e) and (f) added 32610
6.108 Heading and (d) revised 32611
6.400 (d), (e) and (f) revised 32611
6.402 (b) revised 32611
6.502 (b)(4) added 32611
6.503 (b) revised 32611
6.505 (a), (b) and (c) revised; (d) removed; (e) redesignated as (d) and revised 32611
6.506 (a), (b) introductory text and (4) revised 32612
6.507 (a), (b) and (d)(3) revised 32612
6.508 Revised 32612
6.511 (c) revised 32613
6.513 (a) introductory text revised 32613
6.514 (a)(3), (9), and (10), and (b) revised; (a)(11) added 32613
6.602 (b) amended 32613
6.603 Amended 32613
6.800 Amended 32613
6.900—6.905 (Subpart I) Nomenclature change 32613
10.1 Revised 25832
10.2 (c) revised 25832
10.5 Revised 25832
10.9 Amended 25832

40 CFR—Continued

51 FR Page

Chapter I —Continued

10.11 (a) designation removed; (b) removed 25832
14 Revised 25832
16.13 Added 24146
16.14 Revised 24148
30.510 (g) revised 6353
30.540 (b) revised 6353
30.802 (b) and (c) revised 6353
30.1230 (a) revised 6353
30 Appendix E added 6353
33.250 Class deviation 28710
33.305 Class deviation 28710
33.310 Class deviation 28710
51 Nomenclature change 40661
51.1—51.8 (Subpart A) Removed 40661
51.1 (nn) added 11418
Petitions denied 15885
51.10 Removed 40661
51.11 Removed 40661
51.12 (m) and (n) added 11418
Petitions denied 15885
(e) through (i) redesignated as 51.110 (h) through (l); remainder of 51.12 removed 40661
51.13—51.16 Removed 40661
51.18 Petitions denied 15885
51.24 (l) revised 32178
Technical correction 34086
Redesignated as 51.166 40661
51.30—51.34 (Subpart C) Removed 40661
51.40 (a) and (b) amended 40675
51.41 Amended 40675
51.54 (e) amended 40675

40 CFR—Continued

51 FR Page

Chapter I —Continued
51.61 (e) amended 40675
51.80—51.88 (Subpart E) Removed 40661
51.100—51.105 (Subpart F) Added 40661
51.110—51.119 (Subpart G) Added 40665
51.110 (h) through (l) redesignated from 51.12 (e) through (i) 40661
51.150—51.153 (Subpart H) Added 40668
51.160—51.166 (Subpart I) Heading added 40669
51.160—51.165 Added 40669
51.166 Redesignated from 51.24 40661
(a)(5), (b)(2)(iii)(*e*) (*1*) and (*2*), (*f*), (14)(i)(*b*) and (ii)(*a*), (15)(ii)(*b*), and (17), (f)(3), (g)(2)(i), and (i)(9) amended 40675
51.210—51.214 (Subpart K) Added 40673
51.230—51.232 (Subpart L) Added 40673
51.260—51.262 (Subpart N) Added 40674
41.280 Added 40674
41.281 Added 40674
51.340—51.341 (Subpart R) Added 40674
51.327 Amended 40675
51.328 Removed 40675
51 Appendixes A through H, K, M, O, and R removed; Appendixes L, P, and S amended 40675

1987

40 CFR

52 FR Page

Chapter I
1.37 (a) introductory text and (e) revised 30359
1.45 (b) revised 30360
1.47 (d) added 30360
1.49 (g) added 30360
4 Revised; eff. 4–2–89 48023
12 Added 30606
22 Authority citation revised 30673
22.01 (a)(5) revised; (a)(6) added; interim 30673
22.38 Added; interim 30673
50.6 Revised; eff. 7–31–87 24663
Technical correction 26401
50.7 Removed; eff. 7–31–87 24664

40 CFR—Continued

52 FR Page

Chapter I —Continued
Technical correction 26401
50 Appendix G amended; Appendix J added; eff. 7–31–87 24664
Appendix K Added; eff. 7–31–87 24667
Technical correction 26401
Appendix K corrected 29382, 31701
Appendix J corrected 29647
51 Authority citation revised 24712
State implementation plan attainment groups 29383
51.100 (oo) through (ss) added; eff. 7–31–87 24712
51.151 Amended; eff. 7–31–87 24731
51.165 (a)(1)(x) amended; and (b) revised; eff. 7–31–87 24713
Correctly designated 29386
51.166 (a)(6)(i) and (i)(8)(i)(*c*), (*f*), (*h*), and (*l*) revised; (b)(23)(i) and (c) table and (p)(4) table amended; (i)(10) added; eff. 7–31–87 24713
(i)(10) corrected 29386
51.322 (a)(1) and (b)(1) revised; eff. 7–31–87 24714
51.323 (a)(1) and (2) revised; (a)(3) added; eff. 7–31–87 24714
51 Appendixes L and S amended; eff. 7–31–87 24714
Appendix S corrected 29386

1988

40 CFR

53 FR Page

Chapter I
2 Authority citation revised 215
2.100 (b) revised; (e) through (k) added 216
2.101 (d) added 216
2.113 (d), (e), and (f) revised 216
2.116 Revised 217
2.118 (a)(7) revised 217
2.120 Revised 217
2.121 Added 219
13 Added 37270
22 Authority citation revised 5374
22.01 (a)(4) revised 5374, 12263
23 Authority citation revised 29322
23.1 (c) added 29322
23.12 Added 29322
24 Added 12263
27 Added 15182
30 Heading revised; eff. 10–1–88 8076

40 CFR—Continued

53 FR Page

Chapter I —Continued

30.302 (d) (2) and (3) removed; eff. 10–1–88 8076
30.501 (a)(2) removed; (a)(3) redesignated as (a)(2); eff. 10–1–88 8076
30.503 (e), (g) and (h) removed; (f) redesignated as (e); eff. 10–1–88 8076
30.505 (b)(2) removed; (b)(3) redesignated as (b)(2); eff. 10–1–88 8076
30.540 (b) removed; (c) redesignated as (b); eff. 10–1–88 8076
30 Appendix E redesignated as Part 31 Appendix A; eff. 10–1–88 8076
31 Added; eff. 10–1–88 ..... 8075, 8087
31.6 (c)(1) and (d) added; eff. 10–1–88 8075
31.13 Added; eff. 10–1–88 8075
31.36 (c)(5), (j) and (k) added; eff. 10–1–88 8075
31.43 (a)(3)(i) added; eff. 10–1–88 8076
31.45 Added; eff. 10–1–88 8076
31.70 (Subpart F) Added; eff. 10–1–88 8076
31 Appendix A redesignated from Part 30 Appendix E; eff. 10–1–88 8076
32 Revised; nomenclature change 19196, 19204
32.105 (g)(3), (p)(2), (t)(3), (w), and (x) added; eff. 10–1–88 19196
32.110 (a)(2)(iv)(A) added; eff. 10–1–88 19197
32.115 (d) added; eff. 10–1–88 19197
32.200 (c)(5)(i) added; eff. 10–1–88 19197
32.215 (a) added; eff. 10–1–88 19197
32.313 (a)(1) added; eff. 10–1–88 19197
32.315 (a)(1) added; eff. 10–1–88 19197
32.330 Added; eff. 10–1–88 19197
32.335 Added; eff. 10–1–88 19197
32.412 (a)(1) added; eff. 10–1–88 19197
32.425 Added; eff. 10–1–88 19197
32.430 Added; eff. 10–1–88 19197
32 Appendix B amended; eff. 10–1–88 19197
33.110 (e)(5) removed; (e)(6) redesignated as (e)(5); eff. 10–1–88 8077

40 CFR—Continued

53 FR Page

Chapter I —Continued

33.210 (f) removed; (g) and (h) redesignated as (f) and (g); eff. 10–1–88 8077
33.250 Class deviation 9443
33.305 Class deviation 9443
33.310 Class deviation 9443
33.705—33.715 (Subpart C) Removed; eff. 10–1–88 8077
33.905—33.915 (Subpart E) Removed; eff. 10–1–88 8077
33.1021 Removed; eff. 10–1–88 8077
33.1030 Amended; eff. 10–1–88 8077
35 Class deviation 15820
35.100—35.605 (Subpart A) Authority citation revised 37408
35.105 Amended 37408
35.115 (e) and (f) revised 37409
35.155 (c) added 37409
35.400 Revised 37409
35.405 Existing text designated as (a); (b) added 37409
35.410 (c) added 37409
35.415 Added 37409
35.450 Revised 37409
35.455 Existing text designated as (a); (b) added 37409
35.460 Revised 37409
35.465 Added 37409
35.4000—35.4130 (Subpart M) Added; interim 9748
50 Petition denied 52698, 52705
51 Policy statement 480
Petition denied 52705
51.166 (l) revised 396
(b)(3)(iv), (13)(i), (ii) (*a*) and (*b*), (14)(i), (15)(i), (ii)(*a*), (c) tables, (f)(1)(v), (4)(i), and (p)(4) tables revised; (b)(14)(ii) redesignated as (b)(14)(iii); new (b)(14)(ii), (i)(11), and OMB number added; (p)(4) amended; eff. 10–17–89 40670

1989

40 CFR

54 FR Page

Chapter I

4 Regulations at 52 FR 48023 confirmed; see regulation codified at 49 CFR 24 8912
22 Authority citation revised 12371, 21176, 24112
22.01 (a)(4) revised 12371
(a)(6) revised; (a) (7) and (8) added; interim 21176

40 CFR—Continued

54 FR Page

Chapter I —Continued

22.39 Added; interim 21176
22.40 Added; interim 21176
22.41 Added; eff. 7–5–89 24112
32 Heading and authority citation revised 4961
Technical correction 6363
32.305 (c) (3) and (4) amended; (c)(5) added; interim 4962
32.320 (a) revised; interim 4962
32.600—32.630 (Subpart F) Added; interim 4962
32 Appendix C added; interim 4962
35 Authority citation removed 4135
35.100—35.605 (Subpart A) Authority citation revised ... 14357, 40368
35.105 Amended; interim 14357
35.115 (b) and (d) revised; (e) through (i) redesignated as (g) through (k); new (e) and (f) added; interim 14357
(e) revised 40368
35.155 Introductory text amended; (c) added; interim 14358
35.250 Amended; interim 14358
35.255 Revised; interim 14358
35.260 (a) amended; (b) revised; interim 14358
35.265 Added; interim 14358
35.350—35.360 Undesignated center heading revised; interim 14358
35.350 Amended; interim 14358
35.360 (a), (b), and (c) amended; interim 14358
35.365 Added; interim 14358
35.415 (a)(2) revised 52137
35.750—35.760 Undesignated center heading added; interim 14358
35.750 Added; interim 14358
35.755 Added; interim 14359
35.760 Added; interim 14359
35.1600—35.1650–6 (Subpart H) Authority citation revised 14359
35.1600 Amended; interim 14359
35.1605 Amended; interim 14359
35.1605–9 Added; interim 14359
35.1620–1 (c) added; interim 14359
35.4020 (b) revised; (c) added; interim 49851
35.4030 (a)(2) revised; interim 49851
35.4055 (a) (1) and (7) revised; interim 49851

40 CFR—Continued

54 FR Page

Chapter I —Continued

35.4085 (a) introductory text revised; (e) removed; interim 49851
35.4090 (b) introductory text revised; interim 49852
35.6000—35.6920 (Subpart O) Added; interim 4135
35.9000—35.9070 (Subpart P) Added; interim 40804
51 PM 10 grouping revision 12620
Air quality implementation plans 48870
51.165 (a)(1)(xiv) revised 27285
(a)(1)(xix) added; (a)(3)(ii)(C) revised 27299
51.166 (b)(17) revised 27285
(b)(29) and (s)(2)(vi) added; (s)(2)(iv)(*b*) removed; (s)(2)(iv)(*c*) redesignated as (s)(2)(iv)(*b*) 27299
51 Appendix S amended 27285, 27299

1990

40 CFR

55 FR Page

Chapter I

7 Authority citation revised 52142
7.70 (c) and (d) removed; (b) revised 52138, 52142
22 Authority citation revised; eff. 7–12–90 23840
22.38 Revised; eff. 7–12–90 23840
32.600—32.635 (Subpart F) Regulation at 54 FR 4950, 4962 confirmed; revised; eff. in part 7–24–90 ..... 21688, 21701
32 Appendix C regulation at 54 FR 4950, 4962 confirmed; revised; eff. in part 7–24–90 ..... 21690, 21701
34 Added; interim 6737, 6753
35.2005 (b)(47) through (52) redesignated as (b)(48) through (5); new (b)47) added; interim 27095
35.2012 Added; interim 27095
35.2015 (b)(2)(iii) revised; interim 27095
35.2020 (b) revised; (f), (g), and (h) added; interim 27095
35.2021 (a) revised 27095
35.2025 (a) and (b)(5) revised; interim 27095
35.2035 Added; interim 27095
35.2036 Added; interim 27096
35.2040 (g) added; interim 27096
35.2100 Revised; interim 27096

40 CFR—Continued

55 FR Page

Chapter I —Continued
35.2102 Revised; interim 27097
35.2104 Introductory text and (a) through (d) redesingated as (a) introductory text and (1) through (4); new (b) added; interim 27097
35.2118 (a)(1) revised; interim 27097
35.2140 (i) amended; interim 27097
35.2152 (a) introductory text and (3) revised; (c) and (d) redesignated as (d) and (e); new (c) added; interim 27097
35.2203 Added; interim 27097
35.2204 (c) added; interim 27097
35.2212 (b) revised; interim 27097
35.2218 (d) amended; interim 27098
35.2300 (f) added; interim 27098
35.2000—35.2350 (Subpart I) Appendix A amended; interim 27098
Appendix B amended; interim 27098
35.3000—35.3035 (Subpart J) Authority citation revised 27098
35.3000 Existing text designated as (a); (b) and (c) added; interim 27098
35.3100—35.3170 (Subpart K) Added; interim 10178
35.6000—35.6820 (Subpart O) Revised; eff. 7–5–90..... 23007
35.6285 (c)(1)(ii) corrected..... 24343
51 Authority citation revised..... 14249
State implementation plan attainment groups..... 38326, 45800
51.103 (a) introductory text revised 5830
51.212 (c) added..... 14249
51 Appendix M added..... 14249
Appendix M corrected 24687, 37607
Appendix V added..... 5830

1991

40 CFR

56 FR Page

Chapter I
6.400 (f) revised 20543
6.700—6.706 (Subpart G) Revised..... 20543
22 Authority citation revised 3756
22.01 (a)(9) added..... 3757
22.42 Added 3757
24 Authority citation revised..... 49380
24.01 (a) revised; (c) redesignated as (d); new (c) added 49380

40 CFR—Continued

56 FR Page

Chapter I —Continued
24.02 (a) revised..... 49380
24.04 (a) revised..... 49380
24.08 Revised 49380
26 Added; eff. 8–19–91 ..... 28012, 28022
26.101 (b)(5) corrected..... 29756
26.103 (f) corrected 29756
30.541 Added 7305
35 Class deviation 1492
35.2010 Deviation from rule 47403
51 Authority citation revised..... 42219
51.166 (b)(23)(i) amended; eff. 8-12-91 5506
51 Appendix M amended 6278, 65435
Appendix V amended..... 42219, 57288

1992

40 CFR

57 FR Page

Chapter I
Chapter I Nomenclature change..... 28087, 28088
1.25 (e) added 5323
3.100—3.106 (Subpart A) Appendix C amended..... 5323
17.8 Revised 5323
17.14 (b) revised 5323
22 Authority citation revised 4318
22.01 (a)(2) revised 4318
22.03 Amended..... 5323
22.04 (a), (b) and (d)(2) revised; (d)(1) amended..... 5324
Heading revised 60129
22.05 (c)(1) revised; (c)(5) amended..... 5324
22.06 Amended..... 5324
22.07 (b) amended..... 5324
22.08 Amended..... 5325
22.09 (a) amended..... 5325
22.11 (d) amended..... 5325
22.16 (b) and (c) amended..... 5325
(b) amended 60129
22.23 (b) amended..... 5325
22.27 (a) amended; (c) revised 5325
22.29 (a), (c) and (d) amended; (b) revised 5325
22.30 (a)(1), (2) and (b) amended; (c) and (d) revised 5325
22.31 (a) revised 5326
22.32 Revised 5326
22.34 Revised 4318
22.43 Added 4318
27.2 Amended 5326
27.10 (h) through (l) revised..... 5326
27.14 (a)(2) and (b) revised 5326
27.16 (f)(3) revised 5326

40 CFR—Continued

57 FR Page

Chapter I —Continued

27.31 (a) amended; (b) introductory text and (c) revised 5327
27.35 (b) revised 5327
27.37 (d) revised 5327
27.38 (f) and (g) revised 5327
27.39 (a), (b)(3), (c), (f) and (h) through (l) revised 5327
27.40 Revised 5327
27.41 Revised 5327
27.42 Revised 5327
27.46 (c) and (e) revised 5327
27.48 Revised 5328
35.115 (i) revised 8074
35.4000—35.4130 (Subpart M) Revised 45316
47 Added; interim 8390
51 Authority citation revised 32334, 52987
51.100 (s) added 3945
51.165 (a)(1)(xix) revised 3946
(a)(1)(xii)(D) revised; (a)(1)(v)(C)(*8*), (*9*), (xii)(E) and (xx) through (xxv added 32334
51.166 (b)(29) revised 3946
(b)(21)(iv) revised; (b)(2)(iii)(*h*) through (*k*), (21)(v) and (30) through (37) added 32335
51.350—51.373 (Subpart S) Added 52987
51 Appendix S amended 3946
Appendix N removed 52987

1993

40 CFR

58 FR Page

Chapter I

2 Authority citation revised 461
Authority citation revised 63247
2.211 (d) amended 461
2.301 (b)(6) removed, (e) amended; (h)(2)(i), (ii)(A) and (C) revised 461
Heading and (e) corrected 5061
(h)(2)(i) amended 7189
2.306 (j)(1) existing text amended; (j)(1)(i) and (ii) added 462
2.310 Heading, (a)(1), (6), (b), (g)(1), (3), (4), (h)(1) and (4) revised; (g)(5) and (6) added 462
6.303 (a) and (b) revised; (c) through (g) removed 63247
9 Added (OMB numbers) 27472
Authority citation revised 34199, 34370

40 CFR—Continued

58 FR Page

Chapter I —Continued

9.1 Table amended (OMB numbers) 34199, 34370, 40048, 40054, 49376, 57911, 58400, 62283, 66294
35 Authority citation revised 63878
35.10000—35.10035 (Subpart Q) Added; interim 63878
50 National ambient air quality standards for ozone 13008, 21351
51 Sectional OMB numbers removed 34370
Technical correction 34904
Authority citation revised 38821
Solid waste incinerator categories list 58498
51.46 (b) revised, (c) removed; eff. 8–19–93 38821
51.63 (a) amended; eff. 8–19–93 38821
51.112 (a) amended; (a)(1) and (a)(2) added; eff. 8–19–93 38821
51.117 (c)(1), (2), and (3) amended; eff. 8–19–93 38822
51.150 (e) amended; eff. 8–19–93 38822
51.160 (f)(1) and (2) added; eff. 8–19–93 38822
51.166 (b)(3)(iv), (i)(8)(i)(*c*), (c) table and (p)(4) table revised; (f)(3) removed; (b)(14)(iv), (15)(iii) and (i)(12) added; eff. 6–3–94 31636
(l)(1) and (l)(2) revised; eff. 8–19–93 38822
51.351 (a)(7)(iv), (v) and (vi) revised 59367
51.353 (a) amended 59367
51.359 (e)(1) amended 59367
51.360 (a)(8) revised 59367
51.373 (a) amended 59367
51.350—51.373 (Subpart S) Appendixes A, D and E amended 59367
51.390—51.464 (Subpart T) Added 62216
51.850—51.860 (Subpart W) Added (OMB number pending) 63247
51 Appendix W added; eff. 8–19–93 38822

1994

40 CFR

59 FR Page

Chapter I

9 Authority citation revised 32339

40 CFR—Continued

59 FR Page

Chapter I —Continued

9.1 Table amended (OMB numbers) 4493, 8412, 13146, 13564, 14106, 26449, 31335, 31541, 32342, 34097, 38372, 46350, 47416, 50072, 59650, 59924, 60561, 61805, 62588, 62923, 64318, 64593,
Table corrected (OMB numbers) 17154
Table amended (OMB numbers); eff. 7–22–94 32083
Table amended; eff. 7–25–94 (OMB numbers) 32339, 32340, 32341
Table corrected (OMB numbers); eff. 8–30–94 33913
13 Authority citation revised 651
13.34—13.40 (Subpart H) Added; interim 651
15.3 Revised 50692
15.4 Amended 50692
15.11 (c) amended 50692
15.12 (a) and (d) amended 50692
15.13 (a), (c), and (d) amended 50692
15.14 Amended 50692
15.15 Amended 50692
15.16 (c) removed 50692
15.20 Amended 50692
15.21 Amended 50692
15.22 Amended 50692
15.23 Amended 50692
15.24 (a), (c) and (d) amended 50692
15.25 Heading, (a), (b) and (c) amended 50692
15.26 (a) amended; (b) removed 50692
15.27 Amended 50692
15.32 Amended 50692
15.33 Amended 50692
15.40 Revised 50692
15.41 Amended 50692
16.14(a)(1) revised 17486
32 Heading revised 50692
Authority citation revised 50692
32.105 (g)(3) and (t)(3) revised 50692
32.215 (a) revised 50693
32.335 (a) through (d) amended 50693
32.430 (a) through (d) amended 50693
35.105 Amended; interim 13817
35.115 (b), (d), (f) and (g) amended; interim 13817
35.155 (c) amended; interim 13817

40 CFR—Continued

59 FR Page

Chapter I —Continued

35.250 Amended; interim 13817
35.255 (b) amended; interim 13817
35.260 (a) and (b) amended; interim 13817
35.265 (a) amended; interim 13817
35.350 Introductory text amended; interim 13817
35.365 (a)(1) amended; interim 13817
35.400 Amended; interim 13817
35.415 (a)(1) amended; interim 13817
35.450 Amended; interim 13817
35.465 (a)(1) amended; interim 13817
35.750 Amended; interim 13817
35.755 (a) and (b)(1) amended; interim 13817
35.1605–9 Amended; interim 13817
35.1620–1 (c) amended; interim 13817
35.6105 (b)(5) revised 35853
35.6400 (a)(1) and (2) revised 35854
35.9065 (b) removed; (c) redesignated as (b); new (b) introductory text revised; interim 61126
50 Policy decision 38906
51.100 (s)(1) introductory text revised 50696
51.351 (v) correctly revised 32343
51.490—51.494 (Subpart U) Added 16710
51 Appendix X added 16715

1995

40 CFR

60 FR Page

Chapter I

9 Technical correction 27598, 35452
9.1 Table amended (OMB numbers) 4962, 12676, 15386, 17111, 18010, 20232, 20233, 25540, 28052, 29954, 32594, 34170, 34334, 34598, 40496, 42792, 43258, 43886, 45956, 48399, 62935, 63431
OMB number; CFR correction 10029
Table amended (OMB numbers); interim; eff. 7–17–95 26513
Regulation at 59 FR 62923 eff. date delayed to 12–6–95 26828
Table corrected (OMB numbers) 33462
Regulation at 59 FR 62923 eff. date delayed to 6–6–96 56952
31.36 (d), (g), (h) and (i) revised 19639, 19644
32 Authority citation revised 33059

40 CFR—Continued

60 FR Page

Chapter I—Continued

32.100 Revised; eff. 8–25–95 .... 33040, 33059
32.105 Amended; eff. 8–25–95 ..... 33041, 33059
32.110 (c) revised; eff. 8–25–95 ..... 33041, 33059
32.200 Revised; eff. 8–25–95 .... 33041, 33059
32.215 Revised; eff. 8–25–95 .... 33041, 33059
32.220 Revised; eff. 8–25–95 .... 33041, 33059
32.225 Revised; eff. 8–25–95 .... 33041, 33059
32 Appendixes A and B revised; eff. 8–25–95 ..... 33042, 33059
35.105 Amended; interim 371
35.115 (a) amended; interim 371
35.155 Second (c) correctly redesignated as (d) 2881
35.201 Added; interim 371
35.205 Revised; interim 371
35.210 (a) amended; interim 371
35.800—35.845 (Subpart C) Removed 33931
35.850—35.880 (Subpart D) Removed 33931
51 Authority citation revised 1738, 40100
51.40—51.63 (Subpart D) Removed 33922
51.100 (s)(1) introductory text revised 31637
51.105 Amended 33922
51.111 (a), (b) and (c) removed; (d) redesignated as (a) 33922
51.112 (a)(1) and (2) amended 40468
51.113 Removed 33922
51.120 Added 4736
51.160 (f)(1) and (2) amended 40468
51.166 (l)(1) and (2) amended 40468
51.213 (b) removed; (c) and (d) redesignated as (b) and (c) 33922
51.241 (a) amended 33922
51.340 Removed 33922
51.350 (a)(4), (6), (7), (8), (9) and (b)(4) revised; (a)(5) removed 48034
51.351 (a) introductory text and (b) revised; (e) removed; (f) and (g) added 48035
51.360 Introductory text, (a)(1), (5), (6), (7) introductory text, (9) and (b) revised 48036
51.372 (c), (d) and (e) added 1738
51.372 (c) introductory text, (3), (4) and (e) revised 48036
51.392 Amended 57184
51.394 (b)(3)(i) revised; interim 44763

40 CFR—Continued

60 FR Page

Chapter I—Continued

(b)(3)(i) revised; (d) added 57184
51.396 (a) amended 57185
51.420 Revised 57185
51.422 (a) amended; (d) added 57185
51.428 (b)(1)(ii) revised 57185
51.448 (b)(2) and (c)(2) redesignated as (b)(3) and (c)(3); (a)(4), new (b)(2), new (c)(2) and (d)(4) added; new (c)(3)(iii) amended; interim; eff. 2–8–95 through 8–8–95 7452
(a)(3), (b)(1) introductory text and (d)(3) revised; (g)(1) and (2) removed; (b)(2), (c)(2) and (g)(3) redesignated as (b)(3), (c)(3) and (g)(1); new (b)(2) and (c)(2) added 40100
(g) removed; (h) and (i) redesignated as (g) and (h); (a) through (d) and new (g) revised 57185
51.452 (b)(5) redesignated (a)(6); (c)(1) amended 57186
51 Appendix M amended 28054
Appendix U removed 33922
51 Appendix W amended 40468, 40469, 40470, 40471

1996

(Regulations published from January 1, 1996 through July 1, 1996)

40 CFR

61 FR Page

Chapter I

8 Removed 33674
9.1 Table amended (OMB numbers) 11106, 16309, 27140, 33206, 33851, 33852
Table amended (OMB numbers); eff. 7-31-96 34228
15 Removed 28756
22.37 (g) added 11092
30 Revised; interim 6067
32 Heading revised 28756
Authority citation revised 28756
32.100 (e) added 28756
32.105 Amended 28756
32.110 (d) added 28757
32.115 (d) revised 28757
32.215 Revised 28757
32.315 (c) added 28757
32.321 Added 28757
32.330 Removed 28757
32.425 Removed 28757

40 CFR—Continued

61 FR Page

Chapter I—Continued

33 Removed; interim 6067
50.4 Revised 25579
50.5 Revised 25580
51.100 (s)(1) introductory text revised 4590
(o) removed 16060
(o) added 30162
51.101 Removed 16060
Added 30163
51.104 (a), (b) and (e) removed 16060
51.110 (a), (b), (c) and (e) through (l) removed; (d) redesignated as (a) 16060
(g) added 30163

40 CFR—Continued

61 FR Page

Chapter I—Continued

51.166 (b)(23)(i) amended 9918
51.213 Removed 16060
Added 30163
51.241 (b) through (f) removed 16060
51.243 Removed 16060
51.244 Removed 16060
51.245 Removed 16060
51.246 Removed 16060
51.247 Removed 16060
51.248 Removed 16060
51.250 Removed 16060
51.251 Removed 16060
51.252 Removed 16060
51.325 Removed 16060